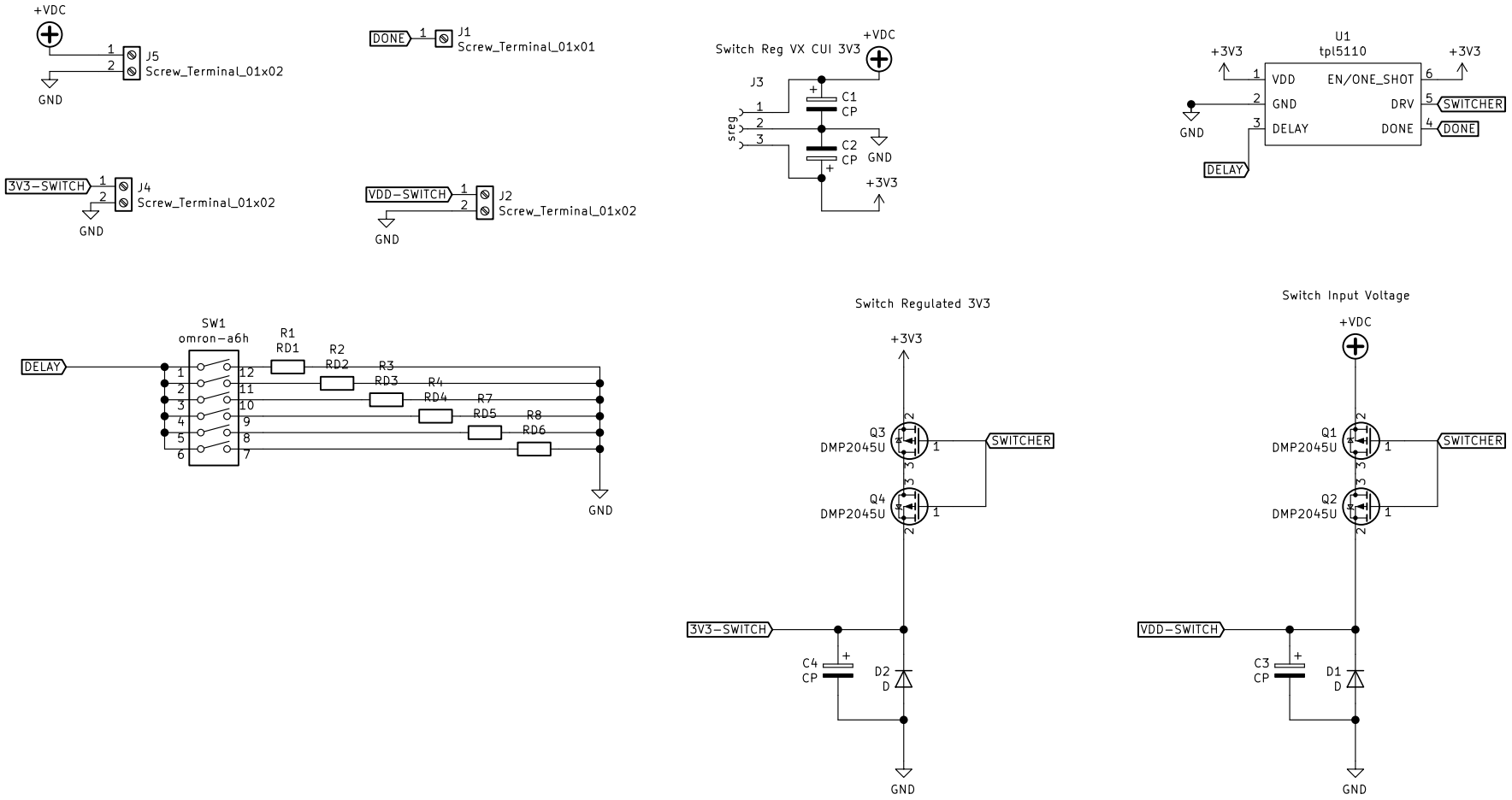

Sheet: /
File: switcher-smt.sch

Title:

Size: A4	Date:	**Rev:**
KiCad E.D.A. kicad 5.0.0-fee4fd166ubuntu18.04.1		Id: 1/1