1. Business Strategy

1.1. Developing Business Strategy

Business Strategy: Meaning and Purpose

- A strategy is how we get from where we are now to where we want to be.
- A successful business sets SMART objectives, and its business strategy will include a clear plan and policies to achieve its goals
- Business strategy asks the big questions, like, 'What markets and products do we want to focus on?'. It also makes big decisions, like 'Is it possible to expand from manufacturing into retail?'
- All businesses need strategies for integration, direction, and focus

Establishing Business Strategy

Four key factors influence business strategies:

1. Resources available
2. Strengths of the business
3. Competitive environment
4. Objectives

Resources Available

- Business resources are finite.
- Limited resources require choosing which strategies to proceed with, drop, or scale back.

Strengths of the Business

- Businesses should develop strategies that complement their strengths
- Avoid long-term plans that stray from the business's area of expertise, as this may require skills and experience that it does not have
- Expansion may be best achieved by selling underperforming or non-core businesses
- The business will then focus on current successes to achieve growth

Competitive environment

- Competitors' actions heavily influence business strategy
- Innovations by competitors are difficult to replicate or improve
- All businesses operate in a competitive environment to some degree

Objectives

- Business objectives also influence strategy
- Increasing shareholder returns in the short-run may conflict with long-term R&D investments with a payback period many years into the future
- A business focused on the triple bottom line may prioritise other goals over shareholder returns
- Businesses with social responsibility objectives pursue different strategies than those focusing solely on shareholder value

Strategic Management: Meaning and Purpose

- Once SMART objectives are set, the strategic management process has three key stages:

Strategic management stages	Key purpose
1. Strategic analysis: assessing the company's current position in relation to its market, competitors, and external environment	Decisions made without knowing the business's current position may be inappropriate and ineffective
2. Strategic choice: making long-term decisions to drive the business toward its objectives	A new direction requires key decisions about products and markets
3. Strategic implementation: allocating resources to execute decisions and evaluating success	New strategies require additional resources, provided at the right time and in sufficient quantities to be effective

- Strategic analysis examines a business's current position, what is happening now and what may happen in the future, to ensure long-term plans fit in with this external analysis. It addresses three key questions:
    1. Where is the business now?
    2. How might current or future events affect it?
    3. How could the business respond to these changes?

Strategic Choice

- Strategic choice is the next stage after potential strategies are identified through strategic analysis
- Strategic choice evaluates the benefits and limitations of different options and then selects one
- Successful choices must be challenging enough to gain a competitive advantage, yet achievable and affordable with resources available
- Techniques can assist managers in making strategic choices, but judgement, experience, and skill are crucial.

Copyright © 2025 ZNotes Education & Foundation. All Rights Reserved.
This document is authorised for personal use only by Sadia Ali at Enderun Colleges on 06/04/26.

Strategic Implementation

- Without successful strategic implementation, effective change in an organisation is impossible**. Key factors for successful implementation include:**
  - Appropriate organisational structure for change
  - Adequate resources to support change
  - Motivated staff committed to successful change
  - Leadership style and culture that support change with wide-range support
  - Control and review systems to monitor progress toward objectives

Strategy and Tactics

- Strategic management is the highest level of managerial activity, led by the CEO and approved by the board of directors
- Tactics involve smaller decisions focused on short-term, measurable goals that support long-term strategy
- Clear distinction between tactics and strategies is essential

The Need for Strategic Management

- **If a business did not undertake strategic management, it would fail to:**
  - Plan for the future
  - Respond logically to changes in the business environment
  - Make effective long-term decisions based on clear objectives

Strategic decisions	Tactical decisions
Long-term	Short to medium-term
Difficult to reverse	Reversible but may incur costs
Made by directors and/or senior managers	Made by less senior managers and subordinates with delegated authority
Cross-functional, involves all major departments	Impact often limited to one department

Blue Ocean Strategy

- The basis of this business strategy approach is to stop competing and start creating. Instead of focusing on markets with many competitors, further developing uncontested markets
- This requires adopting creative, original strategies to develop new markets or segments with no close competitors, known as **blue oceans**. On the other hand, highly competitive markets are called red oceans
  - **W. Chan Kim and Renée Mauborgne**, the creators of this approach, suggest that the best blue ocean strategies combine high product differentiation with low cost, making competition irrelevant
- The theorists suggest that exceptional business success lies in redefining competition and moving into the blue ocean, where competition becomes irrelevant

To identify a blue ocean, Kim and Mauborgne propose the Four Actions Framework, which asks four key questions:

- Raise: What factors, like quality or service, can be raised above industry standards?
- Reduce: Which competition-driven factors can be minimised?
- Eliminate: Which competitive factors can be removed entirely?
- Create: What factors should be introduced that the industry has never offered?

Red ocean strategy	Blue ocean strategy
Compete in existing markets	Create uncontested markets to enter
Surpass competition	Make competition irrelevant
Exploit existing demand	Create and exploit new demand
High value to customer = high costs to business	High value to customer but low cost to business
Product differentiation **or** low cost	Product differentiation **and** low cost

Scenario Planning

- In a fast-changing world, the future of any business is uncertain
- Making fixed plans risks inflexibility and making no future plans risks unpreparedness
- Scenario planning involves senior managers identifying a few possible outcomes, or scenarios, which they then discuss strategies the business could adopt for each scenario should they occur
- Scenarios will vary for each business, based on key risk factors such as **social, economic, technological, or competitive influences**
- Scenario planning is used not only by businesses but also by major non-profit organisations like **Amnesty International, Oxfam, Greenpeace, and the Red Cross** to enhance strategic thinking

Benefits	Limitations
Forces managers to consider key risks and uncertainties	Risk of confusion if too many uncertainties are considered
Managers develop multiple strategies for different scenarios	Some may focus on one scenario, leaving them unprepared for others
Encourages flexibility, as different scenarios require different strategies	Less effective if only short-term risks are considered. Long-term thinking leads to creativity

SWOT Analysis

- SWOT analysis helps match a firm's resources and strengths to its competitive environment

Copyright © 2025 ZNotes Education & Foundation. All Rights Reserved.
This document is authorised for personal use only by Sadia Ali at Enderun Colleges on 06/04/26.

- SWOT is a widely used tool for identifying future strategies, comprising of:
  - **Strengths**: Internal advantages, like experienced management, patents, a loyal workforce, or a strong product range. Identified through an internal audit.
  - **Weaknesses**: Internal disadvantages, such as a poorly trained workforce, limited capacity, or outdated equipment. Also identified via internal audit.
  - **Opportunities**: Potential areas for growth and profit, like new technologies or expanding export markets. Identified through an external audit of the market and competitors.
  - **Threats**: External risks, such as new competitors, price drops due to globalisation, or legal and policy changes. These are identified through an external audit.

SWOT and Strategic Objectives

- **SWOT** helps managers assess likely successful strategies and their constraints
- A business can gain a competitive advantage by matching strengths with opportunities, though overcoming weaknesses may be necessary
- **SWOT** is a common starting point for strategy development, however it is rarely sufficient
- Further analysis and planning are typically required

Evaluation of SWOT

- Subjectivity is a limitation of **SWOT**, as managers may disagree on assessments
- It's not quantitative, so costs of correcting weaknesses cannot be compared to potential profits from opportunities
- **SWOT** should guide strategy development, not dictate future actions
- A key benefit of SWOT is the greater understanding it gives senior managers about their business

PEST Analysis

- Another form of strategic analysis that focuses on the macro environment where a business operates
- The macro environment refers to broad, major factors that influence a business's future strategies
- **PEST analysis** *is an acronym for:*
  - **P** = political (and legal) factors
  - **E** = economic factors
  - **S** = social factors
  - **T** = technological factors
- **PEST analysis** assesses the likelihood of a business strategy's success
- It covers four key external factors beyond the business's control
- These factors are viewed as either opportunities or threats
- **PEST** complements **SWOT**, rather than replacing it

Evaluation of PEST

- Any new business strategy should start with analysing the wider environment in which the strategy has to operate and succeed
- **PEST analysis** formalises this process and informs strategy development
- **PEST analysis** should be regularly updated and reviewed, especially in changing environments
- *For multinational businesses*, **PEST analysis** should be done for each country they operate in:

Political and legal	Economic	Social	Technological
Government stability	Economic growth rate	Demographic changes	New technology enabling cheaper production of products
Likely legal changes effecting this industry	Exchange rate stability	Dominant religion and effect on marketing strategies	Government support for research funding
Environment regulations	Country's membership of free-trade areas	Education standards and effect on labour skills	Effect of internet access and speed on marketing and other strategies
Employment laws	Membership of a common currency	Role of men and women	Cost of renewable energy vs. fossil fuels
Competition regulation	Tax rates and likely changes	Social and environmental issues may increasingly concern the public	Rate of technological obsolescence
Consumer protection laws	Interest rates and likely changes	Labour, social mobility and migration levels	Importance of product innovations to consumers
Government attitude on the free market and business regulations	Inflation rates, stage of the business cycle	One or many languages spoken	Process innovations and effects on competitiveness

Porter's Five Forces Analysis

- Michael Porter's framework for industry analysis consists of **five forces**
- Managers can use it to develop strategies and gain a competitive advantage
- It is similar to other external audit tools like **PEST analysis**
- **Five forces analysis** focuses on entire business units, not individual products
- Helps understand the industry a business operates in

1. Barriers to entry

Copyright © 2025 ZNotes Education & Foundation. All Rights Reserved.
This document is authorised for personal use only by Sadia Ali at Enderun Colleges on 06/04/26.

- This refers to how easily new firms can enter the industry and compete. The threat of entry is highest when:
  - Economies of scale are low in the industry
  - Technology required to enter the industry is cheaper
  - Distribution channels are easily accessible
  - No legal or patent restrictions on entry
  - Low product differentiation, so minimal advertising is needed to establish

2. The power of buyers

- This refers to the power customers hold over producers
- For example, in a market dominated by a few large supermarkets, their buyer power is strong
- Buyer power increases when
  - Many small, undifferentiated suppliers exist
  - Cost of switching suppliers is low
  - Buyers can easily switch to other suppliers

3. The power of suppliers

- Suppliers are more powerful than buyers when:
  - Switching costs are high *(e.g., Microsoft to Mac)*
  - The brand is strong and well-known *(e.g., Cadbury, Nike)*
  - Suppliers can threaten forward integration *(e.g., coffee suppliers opening cafes)*
  - Customers are small and fragmented, have little bargaining power *(e.g., independent petrol stations)

4. The threat of substitutes

- In Porter's model, substitute products refer to alternatives from different industries, not direct competitors (e.g., glass or plastic instead of aluminum)
- Substitution threats arise when:
  - New technology offers alternatives *(e.g., satellite TV replacing antennas)*
  - Price competition leads customers to consider other options *(e.g., lower bus fares instead of rail)*
  - New products shift consumer spending *(e.g., more spending on phones reduces spending on clothes)*

5. Competitive rivalry

- This is the key part of the analysis, summarising the factors that determine competition levels in an industry, based on the other four forces
- Competitive rivalry is highest when
  - New firms can easily enter the industry
  - Threat from substitute products
  - Suppliers have significant power
  - Buyers have significant power
- Rivalry intensifies when:
  - Many firms have similar market shares
  - High fixed costs force firms to seek economies of scale
  - Slow market growth forces firms to take market share from rivals to increase sales

Porter's five forces as a framework for business strategy

Analysing the competitive situation in an industry helps strategic decision-making by:

- Helping businesses determine whether to enter an industry based on potential profitability and competition levels
- Analysing existing markets, decisions may be taken regarding:
  - Staying in markets that are becoming more competitive
  - Reducing competitive rivalry to increase profitability
- Knowledge of competitive forces allows businesses to develop strategies to improve their competitive position

Evaluation of the five forces model

- Porter's model enables managers to analyse the current competitive structure of their industry in a logical way
- It usually serves as a strong starting point for business strategy
- However, it faces criticism for:
  - Being a static analysis that captures only a single moment in time, while many industries rapidly change due to globalisation and technology
  - Becoming overly complex when applied to modern industries with joint ventures, multiple product groups, and varying market segments, each with their own competitive forces

Core competencies

- This concept was first analysed in the work of Gary Hamel and C. K. Prahalad
- They argued that developing core competencies can provide a competitive advantage which helps businesses outperform rivals
- For a core competence to be commercially and profitably beneficial, it should:
  - Provide clear benefits to consumers
  - Be difficult for competitors to replicate *(e.g., a patented design)*
  - Be applicable across various products and markets
- According to Prahalad and Hamel:
  - Core competencies lead to the development of core products
  - Core products are not sold directly to consumers; instead, they are used to produce a large number of end-user products.

Developing core competencies

Copyright © 2025 ZNotes Education & Foundation. All Rights Reserved.
This document is authorised for personal use only by Sadia Ali at Enderun Colleges on 06/04/26.

- A business may excel in a specific activity, but it does not mean it is a core competence if it is not exceptional or easily replicable
- According to Prahalad and Hamel, developing a core competence involves integrating multiple technologies and product skills, some of which may already exist within the business
- Core competencies do not always require significant R&D investment; for instance, patented processes can contribute to core competencies
- Effective collaboration among designers, production specialists, and IT experts can create differentiated core competencies

Core competencies and strategy

- Once a core competence is established, it creates strategic opportunities for developing core products and entering new markets
- Core competencies could include innovations like a fast microchip or a unique electric motor design
- Developing new products for new markets increases opportunities to achieve economies of scale in core product manufacturing

The Ansoff matrix

- The Ansoff matrix is a key tool for assessing corporate business strategies and planning their introduction
- Developed by **Igor Ansoff**, it analyses options for marketing managers to explore sales growth
- **It highlights two main variables in strategic marketing decisions:**
  - Market in which it will operate
  - Product(s) it plans to sell
- **Managers have two options in terms of market:**
  - Remain in the existing market
  - Enter new markets
- **The options in terms of product are:**
  - Sell existing products
  - Develop new products
- **When placed in a matrix (diagram below), these two options for markets and products create four distinct strategies for increasing sales. These strategies are summarised in the matrix**

Market penetration

- Samsung cut European 4K TV prices by up to €1,200 to increase market share
- Market penetration, the least risky Ansoff strategy, keeps market and product constant
- However, low prices may trigger a price war, hurting profit margins

Product development

- Diet Pepsi adapted an existing product and sold it in the same soft drinks market as Pepsi
- Product development often includes innovation, like 5G phones, giving the business a unique identity

Market development

- Market development could involve exporting or targeting new segments
- Lucozade shifted from a health tonic to a sports drink for younger consumers
- Dell and HP can repackage business computers for consumers

Diversification

- The Virgin Group has diversified from media to airlines, trains, and finance
- Tata Industries is also highly diversified, producing steel, cars, and tea bags
- Related diversification (e.g., vertical integration) is less risky than unrelated diversification into new industries
- Diversification is the riskiest strategy as it involves new markets and products, often outside a firm's **core competencies**
- Despite the risk, it offers high profit potential and opportunities in growing industries

Evaluation of the Ansoff matrix

- **The risks of the four strategies differ substantially**. The matrix helps managers assess risks for each expansion strategy. Managers can then assess costs, potential gains, and risks for all options using decision-making techniques

Copyright © 2025 ZNotes Education & Foundation. All Rights Reserved.
This document is authorised for personal use only by Sadia Ali at Enderun Colleges on 06/04/26.

- **Ansoff's analysis helps map business strategies but has limitations**
  - It only considers two factors, so managers should also use SWOT and PEST analysis
  - Relying solely on the Ansoff matrix overlooks important environmental factors
- Management judgment, based on experience with risks and returns, is **just as important as any analytical tool in making the final choice**
- **The matrix does not provide detailed marketing options**. For market development, it does not specify the market or which products to use. Further research and analysis are needed to address these gaps

Force-field analysis

- First developed by **Kurt Lewin**, it involves looking at forces for and against a decision
- It assesses potential advantages and disadvantages before making a choice
- The goal is to help managers strengthen supportive forces and reduce opposing ones
- It can be used for decisions like introducing a new product or service or implementing internal changes in business
- It uses a force-field diagram to display forces for and against a major change visually

Conducting a force-field analysis

1. Analyse the current and desired situation
2. List all driving factors towards the desired situation
3. List all constraining factors against the desired situation
4. Allocate a score (1-10) to each force based on its scale or significance
5. Chart driving forces on the left and restraining forces on the right
6. Total the scores to assess whether the change is viable; if yes, proceed
7. Consider ways to decrease restraining forces and increase driving forces for greater success

In the diagram below, forces opposing the new IT system outweigh those supporting it (11:10). Pushing the decision forward without addressing these concerns could lead to staff resistance and lack of cooperation

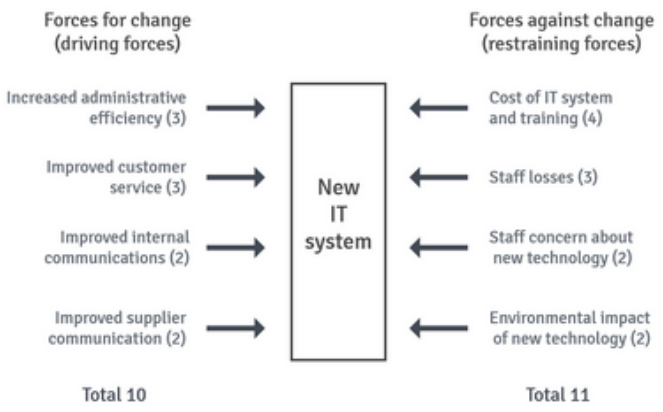

- **Management strategies to address restraining forces include**
  - Training employees to reduce tech concerns **(+1 cost, -2 staff concern)**
  - Show staff change is crucial for business survival **(+2 in favor)**
  - Highlighting new IT skills and job interest **(+1 in favor)**
  - Offering wage increases for productivity **(+1 cost, -2 staff turnover)**
  - Choosing energy-efficient IT equipment **(-1 environmental impact)**
- **These changes shift the balance from 11:10 against to 13:8 in favor of implementing the IT system**

Evaluation of force-field analysis

- **This technique is widely used to assess strategic decisions involving major internal changes but has two main limitations:**
  - Inexperienced or unskilled managers may overlook all relevant forces in the change process
  - Allocating numerical values to forces is subjective, leading to potentially different outcomes from different managers.

Decision trees

- One method for evaluating options and their probabilities is decision trees
- It uses a diagram to represent the four main aspects of a business decision
  - Available options for the manager
  - Possible outcomes of each option
  - Likelihood of each outcome
  - Economic returns from each outcome

Constructing decision trees

Copyright © 2025 ZNotes Education & Foundation. All Rights Reserved.
This document is authorised for personal use only by Sadia Ali at Enderun Colleges on 06/04/26.

- **The decision tree diagram includes these features:**
  - It is constructed from left to right
  - Branches represent options, their outcomes, and their probabilities
  - Squares indicate decision points (decision nodes); circles show chance nodes
  - Probabilities are shown for each outcome
  - Economic returns reflect expected financial gains or losses for each outcome

Working out expected values on decision trees

- Tossing a coin with a **5 dollar** win for heads has an expected value of **2.50 dollars** (0.5 × 5). A decision tree helps identify the option with the highest expected value.
- **For example:** The manager of an event organisation must decide between holding a fundraising auction indoors or outdoors, with the financial success depending on both the weather and this decision.
  - Weather data for August indicates a **60% chance of fine weather** and a **40% chance of poor weather**. The indoor event costs **2000 dollars**, while the outdoor event costs **3000 dollars**.
  - The table below presents expected returns from the event under various circumstances

Weather	Indoors	Outdoors
Fine	$5000	$10000
Poor	$7000	$4000

- **The decision tree of the event is shown below. It demonstrates the main advantages of decision trees:**
  - They compel decision-makers to evaluate all options and variables
  - They provide a clear diagram that incorporates numerical risk and economic returns
  - This method encourages logical thinking and discussion among managers
- **To find the highest expected value for holding the event indoors or outdoors:**
  - Calculate the expected value at each chance node by *multiplying the probability by the economic return for both outcomes and adding the results*
  - Subtract the cost of each option from this value for the net return, *working through the tree from right to left*
    - Expected value at node 1 is $5800
    - At node 2, $7600
    - **Subtract the cost of holding the event indoors or outdoors**
      - **indoors** = 5800 – 2000 = 3800
      - **outdoors** = 7600 – 3000 = 4600

- The events manager should hold the event outdoors, as it offers the highest expected value. The other option is blocked with a double line in the decision tree below to show it's not chosen.

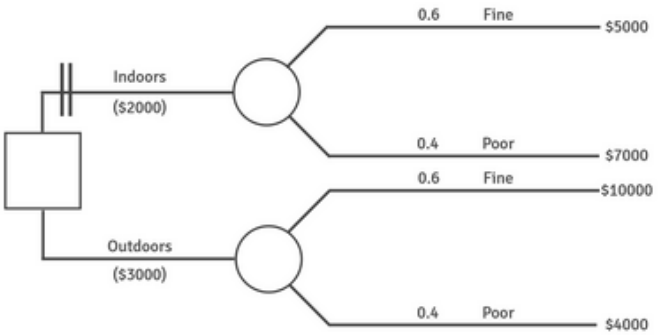

More complex decision trees

Evaluation of decision trees

- **Potential limitations of this technique include:**
  - **Data accuracy:** Economic returns may be reliable for familiar projects but are often based on market forecasts, making decision-tree analysis only a general guide.
  - **Probability reliance:** Probabilities based on past data may not hold if conditions change, such as new competition affecting a store's success.
  - **Risk and qualitative factors:** Decision trees assist but cannot replace risk assessment or qualitative considerations like environmental impact or management's risk tolerance.
  - **Single outcome limitation:** Expected values reflect averages over multiple occurrences, so for one-off decisions, the actual result may differ, leaving risks uneliminated.

1.2. Corporate Planning and Implementation

Components of corporate plans

- **A typical corporate plan includes:**
  - Overall objectives such as profit, sales growth, or market share within a set timeframe
  - Strategies to meet objectives:
    - **Market penetration** - increase sales of existing products
    - **Market development** - develop new markets for existing products
    - **Product development** - develop new products for existing markets
    - **Diversify** - new products for new markets
  - Main objectives for important departments in line with overall objectives

Copyright © 2025 ZNotes Education & Foundation. All Rights Reserved.
This document is authorised for personal use only by Sadia Ali at Enderun Colleges on 06/04/26.

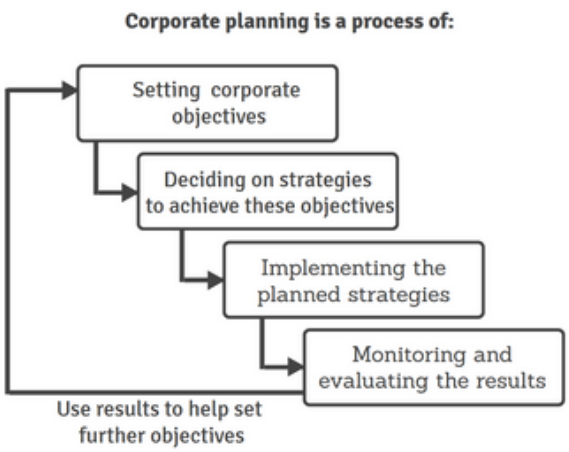

Potential benefits of corporate plans

- Senior managers maintain a clear focus and purpose, selecting strategies with the best chance of achieving set objectives
- The plan communicates this focus to managers, employees, and stakeholders, ensuring effectiveness across businesses, no matter its size
- A key benefit of corporate planning is the ability to compare objectives with actual outcomes, assessing performance
- The planning process itself is a very useful exercise, and forces senior managers to evaluate the organisation's strengths and weaknesses in relation to the business environment

Potential limitations of corporate plans

- Plans can become obsolete due to rapid, unexpected internal or external changes
- This does not mean planning is useless. Part of it involves preparing for unforeseen events
- A solid five-year plan without adapting to changing external factors can be disastrous
- Corporate planning should remain adaptable and flexible to stay relevant during periods of change

The main internal influences on a corporate plan

- **Financial resources:** Can the proposed strategies be afforded?
- **Operating capacity:** Will it meet needs if expansion is approved?
- **Managerial skills:** A major potential constraint, especially with diversification strategies
- **Employee numbers and skills:** Key factor for corporate plan success.
- **Culture of the organisation**

The main external influences on a corporate plan

- **Macroeconomic conditions:** Expansion may be delayed during a recession
- **Central bank and government economic policy changes**
- **Technological changes:** May quickly outdate plans
- **Competitors' actions:** Market competitiveness

Corporate culture

- Commonly used definition for **corporate culture** is *'the way we do things around here'*, meaning how people in an organisation make decisions
  - Different organisations have different cultures
  - An organisation's culture gives it a sense of identity
  - Culture is based by the values, attitudes, and beliefs of its people, especially senior management
  - Values, attitudes, and beliefs strongly influence how employees act and make decisions
  - They define what is normal within an organisation
  - The same person may behave differently in different organisations due to cultural differences

The main types of corporate culture

- **Management writers classify organisational cultures into the following types:**
  - **Power culture:** Associated with autocratic leadership with centralized power; swift decisions are made as so few people are involved in making them
  - **Role culture:** Bureaucratic, rule-bound organisations with defined structures and authority based on position
  - **Task culture:** Teams form to solve particular problems, encouraging creativity and empowerment in a matrix-like structure
  - **Person culture:** Creative, but individual goals may conflict with organisational goals
  - **Entrepreneurial culture:** Success is rewarded, and failure is accepted as part of risk-taking and initiative

Copyright © 2025 ZNotes Education & Foundation. All Rights Reserved.
This document is authorised for personal use only by Sadia Ali at Enderun Colleges on 06/04/26.

Changing corporate culture

- **Many businesses have transformed potential bankruptcy into success by changing their culture. The existing culture may hinder growth, development, and success. Here are examples when changing culture is essential:**
  - A **traditional family firm** transitioning to a public limited company may need to adopt a culture of transparency and recognize externally recruited talent due to new investor demands.
  - A **product-led business** must encourage more worker involvement in response to changing market conditions, possibly adopting a team- or task-based culture.
  - A **recently privatized business**, previously bureaucratic under government ownership, needs to become more profit-oriented and customer-focused, potentially introducing an entrepreneurial culture.
  - A **takeover** may require the acquired business to adapt its culture for consistency within the larger company.
  - Declining profits and market share due to poorly motivated workers and low quality may benefit from adopting a **person-based culture** to improve prospects.
- **Changing corporate culture is never easy and can take years**
  - It means changing how people think and react to problems
  - It can mean challenging long-established practices
  - Often leads to changes in personnel, job roles, communication, and working practices
- **Research must be done to assess the best way to change an organisation's culture. The key elements are:**
  - **Focusing** on positive aspects of the business and build on them
  - Obtaining **full commitment** of all senior managers
  - Setting **new objectives and a mission statement** that reflect the desired values
  - **Involving employees in discussions** about new culture and its impact
  - **Train** employees in the new values and culture
  - **Change the reward system** to encourage and recognise behavior aligned with the new culture

Corporate culture and business decision-making

- **Different business cultures approach decisions and changes differently**. *For example*, in *power culture*, major changes are made without consulting employees. Leading to resistance and lack of coorperation
- In contrast, **Task- or people-based cultures encourage participation in decision-making and implementing strategic changes**. This leads to employees willing to accept change, contributing to a successful change process
- **The link between culture and decision-making depends on whether the culture is strong or weak**. A strong culture promotes successful strategic decision-making through shared beliefs and norms, while a weak culture lacks cohesion and hinders effective implementation
- In businesses with weak cultures, **employees lack shared beliefs and pride in their work**. They may form conflicting groups, offering little support for strategic decision-making or implementation

The importance of corporate culture

- **The impact of culture can have a significant impact on how new strategies are decided and implemented**

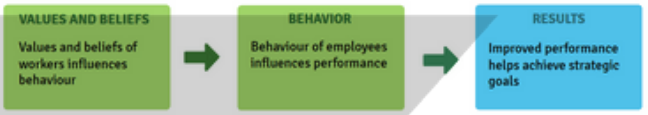

- **Examples reinforcing the importance of corporate culture:**
  - **Business values set the norms for employee behavior**, such as whether offering bribes is acceptable.
  - **Culture determines how managers and workers treat each other**, with openness from leadership often spreading throughout the organization.
  - **A distinctive culture can enhance a business's brand and customer relationships**, as seen with The Body Shop's ethical trading culture.
  - **Culture shapes not only how strategic decisions are made but also what types of decisions are taken**. A people-based culture avoids harming workers or the environment.
  - **Strong corporate culture is linked to long-term success**, as seen with Toyota's continuous improvement approach.

Transformational leadership

- **Transformational leadership is crucial during significant corporate change. A transformational leader will:**
  - Influence employees by setting the right example through their own behavior and qualities.
  - Inspire acceptance of change by communicating a clear vision for the future.
  - Show genuine concern for employees' needs, helping them self-actualize.
  - Challenge employees to strive for higher performance levels.

The importance of transformational leadership

- Transformational leadership increases the likelihood of successful, employee-supported change, leading to ongoing business success.
- It increases business flexibility and adaptability to cope with frequent change and a dynamic environment.

Copyright © 2025 ZNotes Education & Foundation. All Rights Reserved.
This document is authorised for personal use only by Sadia Ali at Enderun Colleges on 06/04/26.

- Focuses on leading rather than forcing change, encouraging employees accepting change and commitment.
- Improves motivation and performance, benefiting both the business and the individual.

Managing and controlling strategic change

Managers must control the change process, not be controlled by it. Managing change includes:

1. Understand what strategic change means

- **Strategic change** is the constant adoption of business strategies to internal and external pressures
- Managers must control change to ensure positive outcomes
- Businesses need a clear vision, strategy, and flexible management process for change
  - Change is the rule, not the exception
  - It is accelerating and ongoing
  - **'Business as usual'** is becoming rare due to global, economic, and technological shifts
  - Change management requires handling both dramatic one-off changes and gradual evolutionary change
- Evolutionary or incremental change *happens slowly over time*
- These changes can be *anticipated or unexpected*
- Anticipated changes are *typically easier to manage*
  - Dramatic or unexpected revolutionary change can cause significant problems. *For example*, civil conflict in Bolivia and Venezuela in 2019 forced holiday companies to relocate
  - In extreme cases, changes may require rethinking the entire operation of a business, known as **business process re-engineering**

2. Recognise the major causes of change

Major changes	Example of change	Managing change
Technological advances in new products and processes	**products** - for e.g AI and machine learning, hydrogen-powered cars **processes** - for e.g robots in production, CAD and computer systems for inventory control	need for retraining, purchasing new equipment, dropping products and additions to product portfolio, quicker product development required, may need new organisational structures and teams
Macroeconomic change: fiscal policy, interest rates, fluctuations in the business cycles	change in disposable income and demand patterns, boom or recession, requiring more capacity and rationalisation	need for flexible production systems due to demand changes, explaining the need for extra capacity or rationalisation, handle redundancies to encourage remaining employees to embrace change
Legal changes	changes in what can be sold and when	training employees on policies, flexible working hours and practices
Competitors' actions	new products, lower prices, higher promotion budgets	encourage innovation, manage resources, if employees accept the need for change, they will accept the change itself

3. Understand the stages of the change process

- Senior managers should follow this checklist:
  - Identify the current situation and why change is necessary
  - Define and communicate a new vision and objectives if needed
  - Ensure enough resources are available to support the change
  - Give warning in advance to minimise resistance
  - Involve employees in planning and implementation
  - Maintain communication
  - Introduce initial changes that bring quick results
  - Focus on training
  - Highlight benefits for employees and stakeholders
  - Support individuals through the change to encourage loyalty
  - Check on and support employees to maintain motivation and quality

4. Lead change, do not just manage it

Copyright © 2025 ZNotes Education & Foundation. All Rights Reserved.
This document is authorised for personal use only by Sadia Ali at Enderun Colleges on 06/04/26.

- Strategic change must be managed
  - Establish new objectives that recognise the need for change
  - Ensure financial and labour resources are available for change
  - Take appropriate action to carry out the planned changes
- Managers should lead change. Leading strategic change goes beyond managing resources. It requires a greater vision than simply managing resources. Leading change means:
  - Dynamic leaders who push the organisation to overcome resistance and embrace change
  - Motivating employees and managers to view change positively
  - Ensuring accepting change is part of the organisation's culture
  - Getting visible support from senior managers to encourage acceptance in all departments

Project champions

- A project champion is appointed by senior management to drive change within a business.
- Typically from middle or senior management, they need enough influence to ensure progress
- Acting as cheerleaders, they support the project without being involved in daily operations
- Their role is to remove obstacles, ensure resource availability, and advocate for the project in meetings
- They help ensure everyone understands the project's goals and objectives

Project groups or teams

- Problem-solving through team building and project groups can effectively address difficult change situations
  - Project groups should collaborate with the manager responsible for implementing the change
  - A team meeting of experts should discuss and create an appropriate action plan
  - The original manager remains responsible for executing the plan
  - This collaborative approach equips the manager to better address obstacles to effective change implementation

Promoting change

- Gaining acceptance of change from the workforce and stakeholders leads to better outcomes than imposing change. John Kotter outlines an eight-stage process to promote change effectively:
  1. Establish a sense of urgency
  2. Create an effective project team to lead the change
  3. Develop a vision and strategy for change
  4. Communicate the change vision
  5. Empower people to take action
  6. Generate short-term gains that benefit many
  7. Consolidate gains and promote further change
  8. Integrate change into the organisation's culture for it to become a natural process

Resistance to strategic change

- One of the biggest problems any organisation faces when implementing change. Employee resistance increases when there is:
  - Fear of the unknown: Uncertainty about job security and the company's future causing anxiety
  - Fear of value: New skills and abilities may be required, employees may be unsure if they can adapt
  - Loss of value: Fear over losing status or job security
  - False beliefs: Some believe the existing system is best and resist change
  - Lack of trust: Past experiences may have led to lack of trust in management's motives and reassurances
  - Inertia: Many prefer the way things are, fearing the effort needed for change

Contingency planning and crisis management

- Also known as disaster recovery planning, it prepares businesses for unplanned events that can severely impact operation
- Crises like fires, floods, inventory damage, illness of key staff, IT failures, or accidents can disrupt daily activities, may lead to lost customers or even business closure
- Effective contingency planning minimises the potential impact of a disaster and ideally prevents it
- If unexpected emergencies occur, crisis management will be required

The main steps in contingency planning includes:

1. Identifying the potential disasters that could affect the business

- Some risks are common to all businesses, while some are industry-specific
- For example, the oil industry must plan for tanker sinkings, refinery explosions, and pipeline leaks

Copyright © 2025 ZNotes Education & Foundation. All Rights Reserved.
This document is authorised for personal use only by Sadia Ali at Enderun Colleges on 06/04/26.

2. Assessing the likelihood of these occurring

- Some incidents are more likely to occur with varying impacts on business operations
- While common disasters should be prioritised, unlikely events can have the greatest impact on a business's future
- Managers must carefully balance these factors when planning for disasters

3. Minimising the potential impact of crises

- Effective planning can sometimes completely eliminate risks
- When this is not possible, the goal is to minimise damage
- This does not mean protecting only assets and people, but also the reputation and public goodwill
- The publicity department should communicate transparently, explaining the known causes, providing contact details, and outlining actions to minimise public impact
- Employee training and mock drills are also effective in reducing negative impacts

4. Planning for continued operations of the business

- Continuity planning is essential in preparing for contingencies
- Prior planning helps a business secure alternative accommodation and save IT data
- The sooner it can resume operations, the less impact there will be on customer relationships

Benefits and limitations of contingency planning

Benefits of contingency planning	Limitations of contingency planning
Reassures employees, customers, and local residents that safety is a priority	Costly and time-consuming. Requires employee training and practice runs for events like fires, IT failures, terrorist attacks, and vehicle accidents
Minimises the negative impact on customers and suppliers during a major disaster	Needs constant updating as potential disasters can change over time
Public relations response is likely to be swift and appropriate, with senior managers explaining the company's intentions, timelines, and actions	Employee training should increase if labour turnover is high
	Avoiding disasters entirely is better than planning for them

Copyright © 2025 ZNotes Education & Foundation. All Rights Reserved.
This document is authorised for personal use only by Sadia Ali at Enderun Colleges on 06/04/26.