Cambridge (CIE) A Level Computer Science

Your notes

Boolean Algebra & Logic Circuits

Contents

- Adders & Circuits
- Flip-Flops
- Boolean Algebra
- Karnaugh Maps

© 2025 Save My Exams, Ltd.

Your notes

Half adders

What is a half adder circuit?

- A half adder circuit is a **basic digital circuit** used in computation to perform the **addition** of **two single bit numbers**
- Has **two inputs**, usually labelled as **A** and **B**
- Produces **two outputs** labelled **Carry out** (C_{out}) and **Sum**(s)

A	B	C_{out}	S
0	0	0	0
0	1	0	1
1	0	0	1
1	1	1	0
		A AND B	A XOR B

- Remember that you are **adding together** the **binary numbers** represented by **A and B**
- Create the **C_{out} column first** then for each row you can just **add A and B together** and write the **answer in 2 bits** in the **C_{out}** and **S** columns
  - For example in row 2:
    - A is 0 and B is 1 and 0+1=1
    - 1 = 01 in 2 bits (C_{out} 0 and Sum 1)
  - In the last row:
    - A is 1 and B is 1 and 1+1 = 2
    - 2 = 10 in 2 bit binary (C_{out} 1 and Sum 0)

Drawing a half adder circuit

- A half adder circuit has **two inputs**, typically labelled as **A** and **B**, and **two outputs**: the **Sum** (S) and **Carry** (C_{out})
- This circuit can be created using an **XOR gate** for the **Sum output** and an **AND gate** for the **Carry output**
- **Label Inputs**:

© 2025 Save My Exams, Ltd.

- Begin by drawing two lines on the left side of your paper or drawing space
- Label the top line as '**A**' and the bottom line as '**B**'
- These represent your **inputs**

- **XOR Gate (Sum)**:
  - **Draw an XOR gate** (often a shape like a curved 'D' or a shape similar to an OR gate but with an additional curved line on the input side) in the middle of the paper or drawing space
  - Connect the A and B lines to the two inputs of the **XOR gate**
  - The output from the XOR gate is the '**Sum**'
  - Draw a line from the output of the **XOR** gate to the right side of your paper and label it as '**S**'
- **AND Gate (Carry)**:
  - **Draw an AND gate** (typically a D-shaped symbol) above the **XOR gate**
  - Again, connect the A and B lines to the two inputs of the **AND gate**
  - The output from the **AND gate** is the '**Carry**'
  - Draw a line from the output of the **AND** gate to the right side of your paper and label it as 'C_{out}'

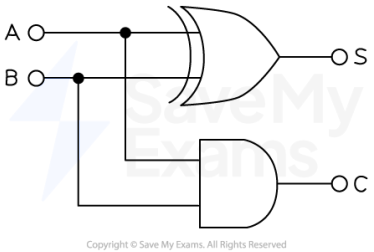

Half Adder Logic Gates

Full adders

What is a full adder circuit?

- A full adder circuit **extends** the half adder to handle the **addition of three bits**
- Has **three inputs**: **A**, **B**, and an input carry (C_{in})
- Produces **two outputs**: carry (C_{out}) and sum (**S**)

A	B	C_{in}	C_{out}	S
0	0	0	0	0
0	0	1	0	1

Your notes

0	1	0	0	1
0	1	1	1	0
1	0	0	0	1
1	0	1	1	0
1	1	0	1	0
1	1	1	1	1

Your notes

- To easily reproduce this **Truth Table**, remember:
  - The full adder **adds up three binary inputs** A,B and C
  - So the answer can be **0,1,2 or 3**
  - For each row, add up A, B and C and the **write the answer as a 2 bit binary number** in the last 2 columns (C_{out} and Sum)
  - For example in row 4, A=0, B=1 and C=1 - **0+1+1=2** which is **10 in binary**, so **C_{out} is 0 and Sum is 1**
  - In the last row, A=1, B=1 and C=1, **1+1+1=3** which is **11 in binary** so **C_{out} is 1 and Sum is 1**

Operation

- The "Sum" output **provides the XOR** of the inputs A, B, and C_{in}
- The "Carry" output is **TRUE** if at **least two of the inputs** A, B, and C_{in} are **TRUE**

Drawing a full adder circuit

- A full adder circuit consists of **three inputs**: **A**, **B**, and Carry (**C_{in}**), and **two outputs**: Sum (**S**) and Carry (**C_{out}**)
- It can be designed using **two half adders** and an **OR gate**
- **Label Inputs**:
  - Start by **drawing three lines** on the left side of your paper or drawing space
  - Label the top line as '**A**', the middle line as '**B**', and the bottom line as '**C_{in}**'
  - These represent your inputs
- **First Half Adder**:
  - **Draw a half adder** with A and B as inputs
  - This consists of an **XOR gate** (for the Sum) and an **AND gate** (for the Carry)

- Label the output of the XOR gate as '**Sum1**' and the output of the AND gate as '**Carry1**'
- **Second Half Adder**:
  - **Draw a second half adder** underneath the first, using **Sum1** and **C_{in}** as inputs
  - Again, it consists of an **XOR gate** (for the Sum) and an **AND gate** (for the Carry)
  - Label the output of the XOR gate as '**S**' (final Sum) and the output of the **AND gate** as '**Carry2**'
- **OR Gate**:
  - **Draw an OR gate** to the right of the half adders
  - Connect Carry1 and Carry2 to the inputs of the OR gate
  - The output of the OR gate is the final Carry (**C_{out}**)

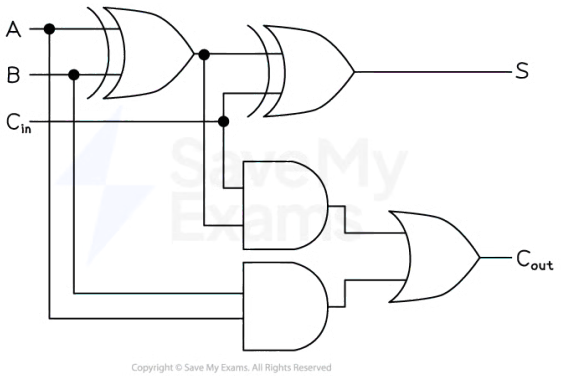

Full Adder Logic Gates

Your notes

Your notes

SR & JK flip flops

What are SR and JK flip flops?

- In A Level Computer Science, **SR (Set-Reset)** and **JK flip flops** are digital memory components used in **sequential circuits**
- They store **1 bit of data** and are commonly used in **counters**, **control systems**, and **synchronous logic**
- They are both types of **bistable circuits**, meaning:
  - They have **two stable states**
  - They **respond to clock signals**
  - They are often **edge-triggered** (typically on the **rising edge**)

SR flip flop

- **SR** stands for **Set** and **Reset**
- An SR flip-flop can be constructed using **NOR gates** (common in exams)

Inputs:

- **S** = Set
- **R** = Reset
- **CLK** = Clock (when edge-triggered)

Outputs:

- **Q** = Current stored value
- **NOT(Q)** = Inverse of Q

SR flip flop truth table (NOR logic)

S	R	Q (next state)	Description
0	0	No change	Memory/Hold
0	1	0	Reset
1	0	1	Set
1	1	0	Forces Q = 0 (NOR only)

© 2025 Save My Exams, Ltd.

Your notes

Examiner Tips and Tricks

- In **NOR-based SR flip-flops**, S = 1, R = 1 is not invalid, it forces **Q = 0**
- (In NAND-based designs, this state is **undefined**)

SR flip flop example

Action	S	R	Q	NOT(Q)	Reasoning
Initially	1	0	1	0	Set: S = 1 forces Q = 1
S changed to 0	0	0	1	0	Memory mode: No change
R changed to 1	0	1	0	1	Reset: R = 1 forces Q = 0
R changed to 0	0	0	0	1	Memory mode: Q holds
S and R changed to 1	1	1	0	0	NOR logic forces both Q and NOT(Q) to 0 (Q = 0)

JK flip flop

- The **JK flip-flop** is a more versatile version of the SR flip-flop
- It solves the problem of the SR's illegal state

Problem with SR	Why JK solves it
1. S = 1 and R = 1 is invalid	JK uses this condition to **toggle** the output instead
2. Glitches from feedback loops	JK uses a **clock** to control exact timing of changes

Inputs:

- **J** = Set
- **K** = Reset
- **CLK** = Clock (required)

Outputs:

- **Q** = Current state
- **NOT(Q)** = Inverse

© 2025 Save My Exams, Ltd.

JK flip flop truth table

J	K	Q (next)	Description
0	0	No change	Memory/Hold
0	1	0	Reset
1	0	1	Set
1	1	Toggle	Q becomes NOT(Q)

Use cases

Flip Flop	Typical uses
SR	Simple memory, control circuits
JK	**Toggles**, **counters**, frequency dividers

Worked Example

Draw a logic circuit for an SR flip-flop and label the inputs. **[3]**

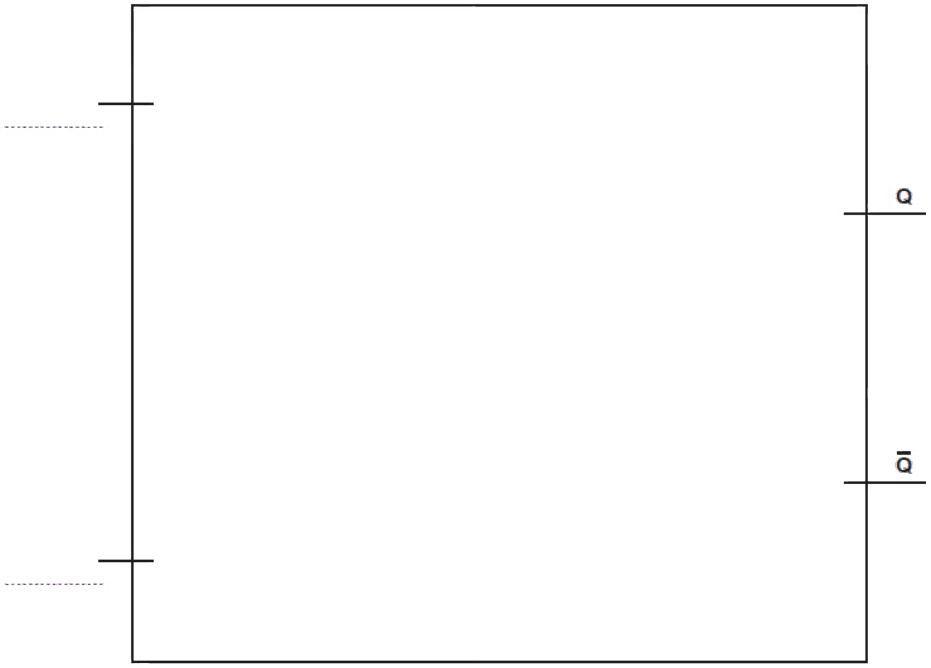

Your notes

Answer

Or

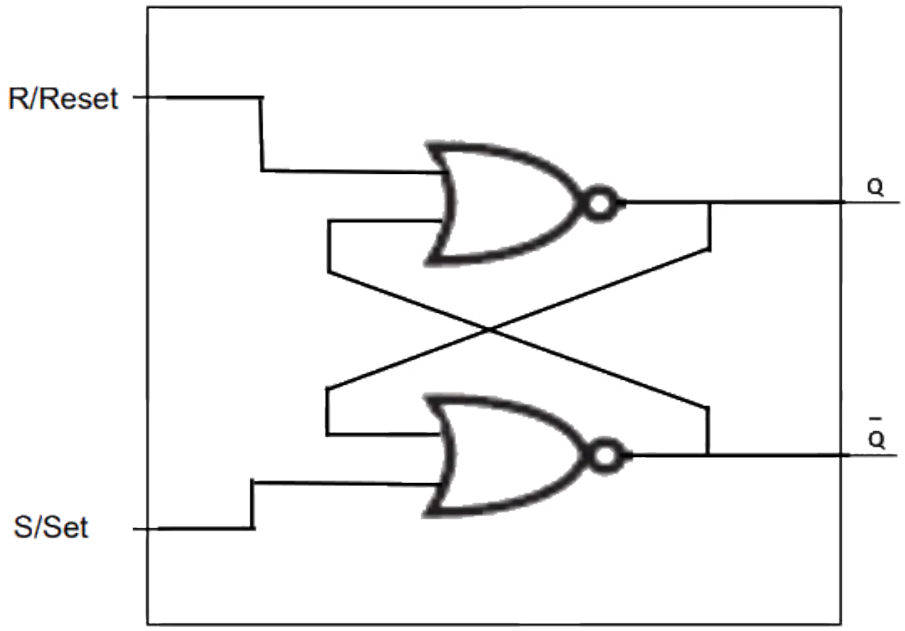

Your notes

Your notes

Boolean algebra

What is Boolean algebra?

- Boolean algebra is a **mathematical system** used to **manipulate Boolean values**
- **Complex expressions** can be made **simpler** using the rules of **Boolean algebra**
- This is a **more powerful simplification** method than Karnaugh maps and can simplify expressions that Karnaugh maps cannot
- There are various different **rules** that you need to learn and that can then be applied to certain expressions to simplify them
- **Combining these rules** can mean that **complex expressions** can be **reduced to much simpler ones**

General rules

- **General AND rules**
  - X AND 0 = 0
  - X AND 1 = X
  - X AND A = X
  - NOT X AND X = 0
- Note, the value ox X is unknown and it is used as a placeholder
- Therefore **X AND 1 = X** means that the output will be whatever the value of X is
- **General OR rules**
  - X OR 0 = X
    X OR 1 = 1
    X OR A = X
    NOT X OR X = 1

Boolean algebra notation

- In Boolean algebra, expressions are written using shorthand notation:

Symbol	Meaning	Example	Explanation
$A \cdot B$ or AB	**AND**	$A \cdot B$	True only if **both** A and B are 1
$A + B$	**OR**	$A + B$	True if **either** A or B is 1
$\neg A$ or A'	**NOT** / complement	$\neg A$	True if A is 0, False if A is 1

© 2025 Save My Exams, Ltd.

( )	Brackets / grouping	(A + B)·C	Do A OR B **first**, then AND with C

Your notes

Examiner Tips and Tricks

A dot (·) for **AND** is often omitted, so AB means A AND B

- A **line drawn above** a variable or expression means that the value is **inverted** or **negated**
- It's the **NOT** of that value

Notation	Meaning	Explanation
¬A or A' or $\overline{A}$	**NOT A**	True if A is False, False if A is True
A · B	A AND (**NOT B**)	B is negated before the AND operation
(A + B)	**NOT** (A OR B)	The entire OR expression is negated (use De Morgan)
(A · B · C)	**NOT** (A AND B AND C)	All values are ANDed together, then the result is negated

- When you see **multiple horizontal lines**, for example:

$$\overline{\overline{(A.B)}.\overline{(A.C)}.\overline{(B.D)}}$$

- It means the **whole expression is negated**, not just one part
- Always apply **De Morgan's Law** starting with the **outermost line** first

De Morgan's Law

What is De Morgan's Law?

- De Morgan's Laws are used to **simplify Boolean expressions** involving **negation** of **conjunctions (AND)** or **disjunctions (OR)**
- They are particularly useful for rewriting logic circuits using only **NAND** or **NOR** gates
- There are two key rules:
  1. **NOT (A AND B)** is equivalent to **(NOT A) OR (NOT B)**

$$\overline{A.B} = \overline{A} + \overline{B}$$

2. **NOT (A OR B)** is equivalent to **(NOT A) AND (NOT B)**

$$\overline{A + B} = \overline{A} \cdot \overline{B}$$

Your notes

Worked example 1: Simplify ¬(A ∧ B)

Step	Explanation	Expression
Step 1	Start with the original expression	$\overline{A \cdot B}$
Step 2	Apply De Morgan's Law: change ∧ to ∨ and negate both terms	$\overline{A} + \overline{B}$
Step 3	Remove unnecessary brackets	$\overline{A} + \overline{B}$

Worked example 2: Simplify ¬(A ∨ B)

Step	Explanation	Expression
Step 1	Start with the original expression	$\overline{A + B}$
Step 2	Apply De Morgan's Law: change ∨ to ∧ and negate both terms	$\overline{A} . \overline{B}$
Step 3	Remove unnecessary brackets	$\overline{A} . \overline{B}$

Why use De Morgan's Laws?

- Simplifying Boolean expressions using De Morgan's Laws:
  - Allows for implementation using only **NAND** or **NOR** gates
  - Makes **circuit design more efficient** and cost-effective
  - Is essential in hardware where NAND/NOR logic is cheaper or faster to implement
  - Is commonly used in **microprocessor** and **memory device** design (e.g. flash drives)

Worked Example

Simplify the following expression using Boolean algebra, including De Morgan's laws. Show your working.**[3]**

$$\overline{\overline{(A.B)}.\overline{(A.C)}.\overline{(B.D)}}$$

Answer

- Correct application of De Morgan's Law [1 mark]
- Correct application of Double Negation Law or Distributive Law [1 mark]
- Correct answer [1 mark]

$$\overline{\overline{(\overline{A}.\overline{B})}.\overline{(\overline{A}.C)}.\overline{(B.D)}}$$

$$\overline{\overline{(\overline{A}.\overline{B})}} + \overline{\overline{(\overline{A}.C)}} + \overline{\overline{(B.D)}} \text{ [1]}$$

$$(\overline{A}.\overline{B}) + (\overline{A}.C) + (B.D) \text{ [1]}$$

$$\overline{A}.\ (\overline{B} + C) + B.D \text{ [1]}$$

Your notes

© 2025 Save My Exams, Ltd.

Your notes

Karnaugh maps

What is a Karnaugh map?

- A Karnaugh map (**KMap**) is a tool that is used for **simplifying Boolean algebra expressions**
- It offers a **visual method** of **grouping together expressions** with **common factors**
- The format of the map makes it **easy to identify** and **eliminate redundant terms**
- They are used in **digital logic design**, such as simplifying the logic of digital circuits

Steps:

1. **Create the Map**: Each cell in the grid corresponds to a term in the Boolean expression. Fill cells with 1s and 0s corresponding to the output of that term
2. **Grouping**: Group the 1s in the grid. Each group must be a rectangle and the size of the group must be a power of 2. A cell can be part of multiple groups
3. **Simplifying**: Write down a simplified Boolean expression for each group. The simplified expression for a group consists of the variables that remain constant in all terms in the group
4. **Final Expression**: Combine the simplified expressions from each group using OR operations to get the final simplified Boolean expression

Creating Karnaugh Maps

- A Karnaugh Map (**KMap**) can be used to **simplify a Boolean expression** with 2 inputs
- Here is an example for the expression **A V B** (**A OR B**)

Step 1

- **Add each variable** starting with **A** at the top and **B** down the side
- **Add each possible state** for **A** and **B**

		A	A
		0	1
B	0		
B	1		

© 2025 Save My Exams, Ltd.

Your notes

Step 2

- Take each expression in turn **separated** by the **V** (**OR**)
- First look at **A** on it's own
- Find **all cells where A is 1**
- **Add 1 to the cell**

		A	A
		0	1
B	0		1
B	1		1

Step 3

- **Repeat for B**

		A	A
		0	1
B	0		1
B	1	1	1

Step 4

- This is now a **completed KMap** for the expression **A V B** (**A OR B**)

		A	A
		0	1
B	0		1
B	1	1	1

© 2025 Save My Exams, Ltd.

Simplifying expressions using Karnaugh Maps

Your notes

- Simplify **¬A^¬B^C v ¬A^B^¬C v A^¬B^C v A^B** using a KMap
- In this example there will be **3 variables** A,B and C so the empty KMap will look like this:

		AB			
		00	01	11	10
C	0				
	1				

Step 1:

- Split this long term at each **OR** giving 4 smaller expressions (subterms) to add to the table:
  - **¬A^¬B^C**
  - **¬A^B^¬C**
  - **A^¬B^C**
  - **A^B**

Step 2:

- Take the first subterm **¬A^¬B^C**
- Put a **1** in the map for **every cell where this term would be TRUE (1)**
- So if **A** and **B** were **0** and **C** was **1** this subterm would be **1**
- So put a **1** in every cell in the KMap where **A is 0**, **B is 0** and **C is 1**

		AB			
		00	01	11	10
C	0				
	1	1			

Step 3:

- The next subterm is **¬A^B^¬C**
- Put a **1** in the KMap where **A is 0**, **B is 1** and **C is 0**

Your notes

		AB			
		00	01	11	10
C	0		1		
	1	1			

Step 4:

- The next subterm is **A^¬B^C**
- Put a **1** in the KMap where **A is 1**, **B is 0** and **C is 1**

		AB			
		00	01	11	10
C	0		1		
	1	1			1

Step 5:

- The final subterm is **A^B**
- Put a **1** in the KMap where **A is 1** and **B is 1** (2 cells this time)

		AB			
		00	01	11	10
C	0		1	1	
	1	1		1	1

Making the groups

- Once you have written the 1s and 0s into your KMap, you can then use this to **simply the expression**
- In order to do this, you need to **identify the groups**
- This is the **key** to using the Karnaugh map to derive the simplified expression
- The aim of making the groups is to
  - **Make rectangular groups**
  - **Make groups that are as large as possible**

- **Make groups that contain either 8,4,2 or 1 ones**
- **Groups can overlap** (i.e. some ones can be in multiple groups)
- **The Karnaugh map 'grid' wraps round in all directions so the groups can wrap round**

Your notes

Example grouping

Group 1:

- So this would be one group

		AB			
		00	01	11	10
C	0	1		1	1
	1	1		1	1

- This group would represent **A** since within this group both C and B change (have zeros and ones) whereas for A all the cells are one.

Group 2:

- This would be another group (**note the wrapping around**).

		AB			
		00	01	11	10
C	0	1		1	1
	1	1		1	1

- This group would represent **¬B** since within this group both A and C change (have zeros and ones) whereas for B all the cells are zero

Final simplified expression

- To get the final simplified expression we **OR** the terms representing the two groups together.
- So the simplified expression is **A v ¬B**

Examiner Tips and Tricks

In questions where you have to use a Karnaugh Map always show the groups by drawing a box/circle round them.

Your notes