Cambridge (CIE) A Level Computer Science

Your notes

Processors, Parallel Processing & Virtual Machines

Contents

- Processor Types
- Processor Features
- Computer Architectures
- Parallel Computing
- Virtual Machines

© 2025 Save My Exams, Ltd.

Processor Types

Your notes

RISC & CISC

- A computer processor will have an **instruction set** that it can use to execute programs
- This will **vary from one processor to the next**
- There are **2 types of processors**:
  - Reduced Instruction Set Computer (**RISC**)
  - Complex Instruction Set Computer (**CISC**)

RISC

- **Reduced Instruction Set Computer (RISC)** consists of a **smaller instruction set** with more simple instructions
- Each instruction takes **one clock cycle to execute** which makes it more **suitable for pipelining**
- Compilers are more complicated so will **generate more instructions**
- Has **fewer addressing modes**
- Is usually used in **smartphones and tablets**

CISC

- **Complex Instruction Set Computer (CISC)** consists of a **larger instruction set** which includes more complex instructions
- As the instructions are more complex, they can **take more than one clock cycle to execute**
- Has more **general purpose registers**
- Instructions take up **less space in memory**
- Is usually used in **laptops and desktop** computers

What's the difference between RISC & CISC?

	RISC	**CISC**
Feature	Has fewer transistors	Has more transistors
	Takes one clock cycle per instruction	Takes multiple clock cycles per instruction
	Suited to pipelining	Not suited to pipelining

© 2025 Save My Exams, Ltd.

	Compilers are more complicated	Compilers are less complicated
	Has fewer general purpose registers	Has more general purpose registers
	Used in smartphones and tablets	Used in laptops and desktops
	Has fewer addressing modes	Has more addressing modes
Benefits / Drawbacks	Requires less power	Requires more power
	Costs less to manufacture	Costs more to manufacture
	Takes up more space in memory	Takes up less space in memory

- A program that has been **written for a RISC** processor **won't work on a CISC** processor and vice versa
- A program that has been **written for a RISC** processor **won't necessarily work on another RISC** processor as they may have different instruction sets

Interrupt handling on RISC & CISC

- The concept of interrupt handling is covered in section 4, interrupts

Feature	CISC	RISC
Instruction complexity	CISC has **complex instructions**, often with built-in support for interrupt routines	RISC has **simple, fixed-length instructions**, interrupt handling done using simpler routines
Interrupt handling	Often uses **microcode and dedicated hardware instructions** to manage interrupts efficiently	Uses **software-based interrupt handlers**, managed through general-purpose registers and simple instructions
Context switching	May have **hardware support** to save and restore processor state automatically	Typically handled in **software**, giving more control but requiring more instructions
Speed of response	Generally **faster interrupt handling** due to built-in support	**Slower**, but more flexible and consistent across all instructions

Your notes

© 2025 Save My Exams, Ltd.

Instruction cycle impact	CISC can handle **multiple tasks in a single instruction**, including context saving	RISC uses **multiple simple instructions**, giving the OS greater control

Your notes

- **CISC processors** often have **dedicated instructions** for handling interrupts, making the process more efficient but less flexible
- **RISC processors** rely more on **software routines**, making interrupt handling **slightly slower**, but simpler and more predictable
- Both architectures aim to **respond to interrupts quickly and resume execution** correctly, but they do so using different design philosophies

Worked Example

Reduced Instruction Set Computers (RISC) and Complex Instruction Set Computers (CISC) are two types of processor.

Tick (3) one box in each row to show if the statement applies to RISC or CISC processors. **[2]**

Statement	RISC	CISC
uses a smaller instruction set		
uses single-cycle instructions and limited addressing modes		
uses fewer general-purpose registers		
uses both hardwired and micro-coded control unit		
uses a system where cache is split between data and instructions		

Answer

Statement	RISC	CISC
uses a smaller instruction set	✓	
uses single-cycle instructions and limited addressing modes	✓	
uses fewer general-purpose registers		✓
uses both hardwired and micro-coded control unit		✓
uses a system where cache is split between data and instructions	✓	

© 2025 Save My Exams, Ltd.

Your notes

Pipelining

What is pipelining?

- Pipelining is the process of carrying out multiple instructions **concurrently**
- Each instruction will be at a different stage of the **fetch-decode-execute cycle**
- One instruction can be **fetched** while the previous one is being **decoded** and the one before is being **executed**
- In the case of a **branch**, the pipeline is flushed
- This table shows which stage each instruction is at during each step:

	Fetch	Decode	Execute
Step 1	Instruction A		
Step 2	Instruction B	Instruction A	
Step 3	Instruction C	Instruction B	Instruction A
Step 4	Instruction D	Instruction C	Instruction B

- While one instruction is being executed, the next instruction will be decoded and the following instruction will be fetched

Pipelining in RISC processors

- RISC (Reduced Instruction Set Computer) processors are **designed for pipelining efficiency**
- Key features that support pipelining:
  - **Each instruction takes one clock cycle** (or close to it)
  - **Fixed-length instructions**, making decoding easier
  - **Limited instruction set**, reducing complexity and stage duration
  - **A large number of general-purpose registers**, reducing memory access

Role of registers in RISC pipelining

- Registers are **fast, temporary storage** inside the CPU
- RISC processors rely heavily on **registers for operand storage** rather than accessing RAM

© 2025 Save My Exams, Ltd.

- Intermediate values are stored in registers between stages
- Register usage reduces **memory bottlenecks**, allowing pipelining to run smoothly
- **Example:**
  - Instruction A loads value into **Register R1**
  - Instruction B adds **R1 + R2** and stores result in **R3**
  - All of these can be done efficiently **within the CPU** using registers

Your notes

Benefits of pipelining

Advantage	Explanation
Increased throughput	Multiple instructions handled at once
Better use of CPU components	Fetch, decode, and execute units are all in use simultaneously
Reduced idle time	No waiting between stages
Faster execution of instruction stream	Even if individual instructions don't run faster

Worked Example

Describe the process of pipelining during the fetch-execute cycle in RISC processors.**[4]**

Answer

- Instructions are divided into subtasks / 5 stages [1 mark]
- … Instruction fetch / IF, Instruction decode / ID, operand fetch / OF, opcode/instruction execute IE, result store / write back result / WB [1 mark]
- Each subtask is completed during one clock cycle [1 mark]
- No two instructions can execute their same stage at the same clock cycle [1 mark]
- The second instruction begins in the second clock cycle, while the first instruction has moved on to its second subtask [1 mark]
- The third instruction begins in the third clock cycle while the first and second instructions move on to their second and third subtasks, respectively, etc. [1 mark]

Your notes

Architecture types

What is a computer architecture?

- A computer architecture is the design and structure of a computer system
- It describes how it **fetches, processes, and stores data and instructions**
- It defines how components like the CPU, memory, and input/output devices **work together to execute programs**
- Each architecture is categorised as:
  - **S**ingle or **M**ultiple **Instruction** stream
  - **S**ingle or **M**ultiple **Data** stream

SISD – Single Instruction, Single Data

Description	Key Features
One processor executes **one instruction** on **one data stream** at a time	Traditional serial (non-parallel) architecture
Used in **basic, single-core processors**	Step-by-step processing

Example: Classic desktop CPU running one task at a time

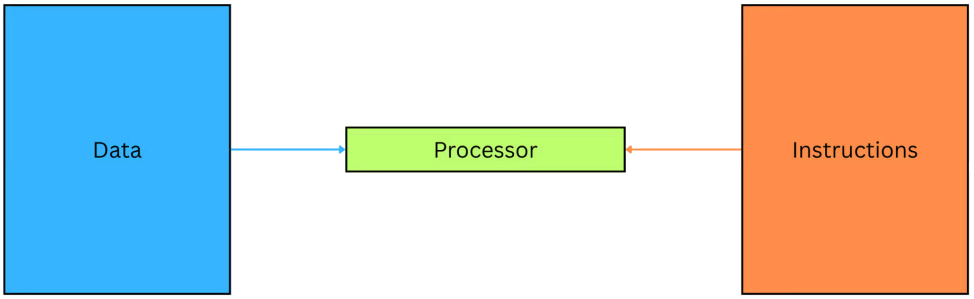

Single Instruction, Single Data Diagram

SIMD – Single Instruction, Multiple Data

Description	Key Features

© 2025 Save My Exams, Ltd.

One instruction is applied to **multiple pieces of data** at once	Useful for **parallel processing**
All processing units perform the **same operation** in parallel	Ideal for graphics or scientific computation

Example: GPU operations, image processing

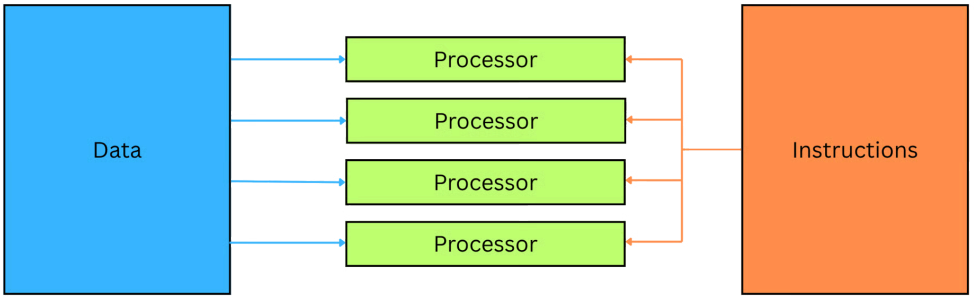

Single Instruction, Multiple Data Diagram

MISD – Multiple Instruction, Single Data

Description	Key Features
Multiple processors execute **different instructions** on the **same data**	Very uncommon in practice
Used in specialised systems for **fault tolerance**	Each unit checks the same input differently

Example: Redundant systems in safety-critical environments

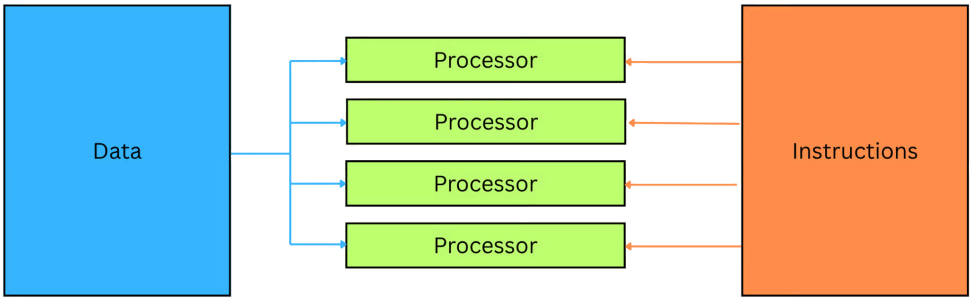

Multiple Instruction, Single Data Diagram

Your notes

MIMD – Multiple Instruction, Multiple Data

Description	Key Features
Multiple processors execute **different instructions** on **different data sets**	Most **modern multi-core processors** use this model
Allows full **concurrent processing** of independent tasks	Flexible and scalable for parallel programs

Example: Multi-core CPUs, distributed systems, cloud computing

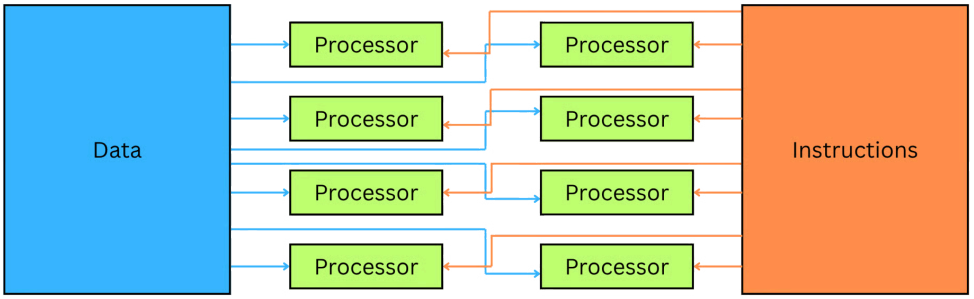

Multiple Instruction, Multiple Data Diagram

Summary table

Architecture	Instruction Stream	Data Stream	Used In
SISD	Single	Single	Standard sequential processors
SIMD	Single	Multiple	Vector processing (e.g. GPUs)
MISD	Multiple	Single	Specialised fault-tolerant systems
MIMD	Multiple	Multiple	Multi-core processors, parallel systems

Your notes

Your notes

Massively parallel systems

What are massively parallel computers?

- Massively parallel computers are systems made up of **thousands of processors** working **simultaneously** to solve a single large problem
- Each processor **executes part of a program**, and **results are combined** to produce the final output
- They are designed to tackle **complex, large-scale tasks** in fields like
  - **Scientific research**
  - **Weather simulation**
  - **Cryptography**
  - **AI**

Key characteristics

Feature	Description
Thousands of processors	Many processors are connected and work together to execute different parts of the same task
Shared or distributed memory	Each processor may have its own memory or access shared memory resources
High-speed interconnects	Processors are linked via **fast communication pathways** to share results
Data parallelism	Many data items can be processed at once — often using **SIMD** or **MIMD**
Task parallelism	Different processors may perform **different tasks** on **different data sets**
Specialised software	Requires software written to **distribute the work efficiently** across processors
Tightly coupled	Processors **depend on one another** and work collaboratively as a single system

Massively parallel vs cluster computers

© 2025 Save My Exams, Ltd.

Massively parallel computers	Cluster computers
Thousands of processors form a **single tightly integrated system**	Multiple independent systems networked together
Processors **communicate continuously** via shared architecture	Communication occurs via network, often loosely coupled
Acts like **one machine** with distributed processing	A group of **co-operating systems** (can be SIMD-based)
Higher performance, used for **supercomputing tasks**	More general-purpose or batch processing systems

Your notes

Link to computer architectures

- Massively parallel systems often use:
  - **SIMD**: Apply one instruction to many data points simultaneously
  - **MIMD**: Run different instructions on different data, fully independently

Your notes

Virtual machines

What are virtual machines?

- Virtual machines (VMs) are entire operating systems **running inside another operating system**
- A user running **Windows 11** could run a **virtual machine of MacOS**
- This would allow them to **navigate the GUI** of MacOS and **install software** on it
- Running a virtual machine **helps access software** that is only **designed to run on specific** operating systems
- VM management software includes a **Hypervisor** that monitors all activity happening inside the VM

Structure of several virtual machines running on a single piece of hardware

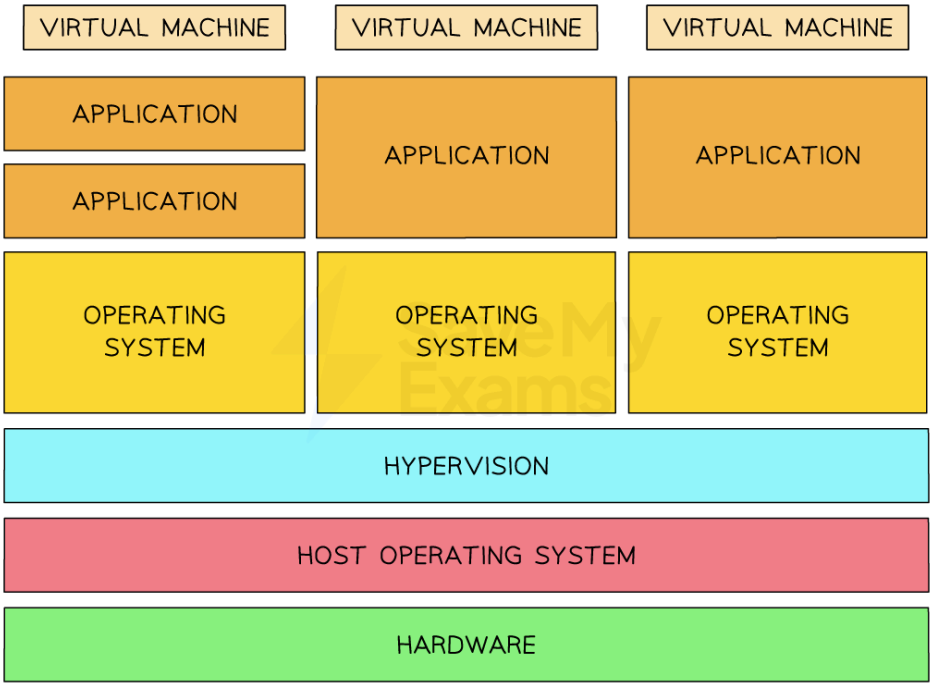

Copyright © Save My Exams. All Rights Reserved

Cross-platform and forwards compatibility

- Not all software is designed to run on all operating systems
- Apple commonly makes software that **only runs on MacOS** for performance reasons
- A Windows user could run a virtual machine of MacOS and install the software they need

- Most software **needs to be updated** to work on the latest versions of operating systems
- A user running the latest release of Windows may need to run a virtual machine of a *previous* release of Windows to use an application that hasn't received a **forwards-compatibility update**

Your notes

In software testing

- VMs are a way to create **isolated test environments**, that leave the host operating system unaffected
- Isolated environments allow a developer to:
  - Monitor the way their software **affects system performance**
  - Test on a **clean-slate system**, while no other applications are running
- VM management software can create virtual machines that **act** like they have **older hardware**
- This allows developers to build software that can be run on older hardware so that **more users can use the software**
- A developer can test against **various operating systems**, such as MacOS, Linux and Windows, for **greater compatibility**
- In A Level Computer Science, **intermediate code** is generated through compilation and allows programs to run across different operating systems

Consequences

- VMs **share** the same system **hardware** as the **host** OS
- Over-use of VMs can **exhaust** the host OS of the system of CPU, hard disk and memory
  - VM software such as **VirtualBox** can set maximum limits on system resources
  - A **low-specification** machine could be configured to allocate only 1GB of memory and 20% of CPU
  - A **high-specification** machine could afford up to 8GB of memory and 50% of the CPU
- Operating systems are commonly **free to download**, but require an **activation payment** to access all features

© 2025 Save My Exams, Ltd.