Cambridge (CIE) A Level Maths: Mechanics

Your notes

Newton's Second Law

Contents

- F = ma
- Connected Bodies (Ropes & Tow Bars)
- Connected Bodies (Lifts)
- Connected Bodies (Pulleys)

© 2025 Save My Exams, Ltd.

Your notes

F = ma

What is Newton's First Law of Motion (N1L)?

- An object at rest will stay at rest, and an object moving with constant **velocity** will continue to move with constant velocity, unless an unbalanced force acts on the object
- This law is explored more in **3.1.1 Equilibrium in 1D** and **3.1.2 Equilibrium in 2D** but has been included here for completeness

What is Newton's Second Law of Motion (N2L)?

- The **resultant force** (F_{net}) acting on a body is equal to the product of the **mass** of the body and its **acceleration**
  - ***F = ma***
    - *F* is the resultant force (N)
    - *m* is the mass (kg)
    - a is the acceleration (m s^{-2})
- This will probably be the most familiar of Newton's Laws of Motion as it has an equation (*F = ma*) that you will use frequently in mechanics problems.

What is Newton's Third Law of Motion (N3L)?

- For two bodies, the force exerted on the second by the first is equal in magnitude but opposite in direction to the force exerted on the first body by the second
- This is sometimes loosely referred to as "for every action there is an opposite and equal reaction"

When do I use F= ma (Newton's Second Law or N2L)?

- Use it to **set up** and **solve** equations when **motion** is involved
- Some related equations may come from the **constant acceleration equations** ('*suvat*') but ***F= ma*** is needed when **force(s)** and **mass** are mentioned or involved (neither force nor mass are involved in the '*suvat*' equations)
- If not asked directly in a question it will be implied by the information given – **motion** and **acceleration** will be involved and the **mass** of the particle will be relevant too

How do I solve problems using F= ma (N2L) and the 'suvat' equations?

- *F= ma* can be used in conjunction with the '*suvat*' equations – the linking connection is **acceleration** (a)
- 'suvat' only questions will not involve **mass** or (**resultant**) **force**
- Step 1. **Draw** a **diagram** and label all forces acting on the particle(s)

© 2025 Save My Exams, Ltd.

- label the positive direction and any other useful information
- If a diagram is given, add anything missing to it

- Step 2. Use N2L, $F = ma$, or an appropriate '*suvat*' equation.
  - If there is more than one particle involved you may have to do this for each
- Step 3. Solve the equation
  - In harder problems simultaneous equations may arise.

Your notes

How do we deal with forces acting in different directions on a particle in motion?

- In most problems where **forces** are acting in different directions, those directions will be **perpendicular** to one another or can be resolved into components acting perpendicular to each other
- In such cases we apply N2L ($F = ma$) and '*suvat*' equations separately to both directions

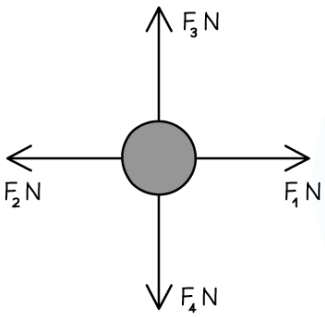

IF $F_1 - F_2 = 0$ THEN $F_{net} = 0$ HORIZONTALLY AND THE PARTICLE IS NOT IN MOTION IN THE HORIZONTAL DIRECTION.
IF $F_4 - F_3 = 0$ THEN $F_{net} = 0$ VERTICALLY AND THE PARTICLE IS NOT IN MOTION IN THE VERTICAL DIRECTION.
USE $F_{net} = 0$ TO SET-UP AND SOLVE PROBLEMS IN EITHER OR BOTH DIRECTIONS AS APPROPRIATE
(NOTICE HOW $F_{net} = 0$ IS N2L, "F = ma" WITH "a = 0")

IF $F_1 - F_2 \neq 0$ AND/OR $F_4 - F_3 \neq 0$ THEN THE PARTICLE IS IN MOTION. USE $F_{net} = ma$ TO SET-UP AND SOLVE PROBLEMS IN EITHER OR BOTH DIRECTIONS AS APPROPRIATE.

Copyright © Save My Exams. All Rights Reserved

How do we use F = ma in problems involving weight?

- **Weight** is a **force**
  - W = mg N where g m s^{-2} is the **acceleration** due to **gravity**
  - Weight always acts **vertically downwards** (towards earth)
  - If **upwards** is the **positive direction** (and assuming no other vertical forces are involved) then **acceleration** would be negative, a = -10 m s^{-2}

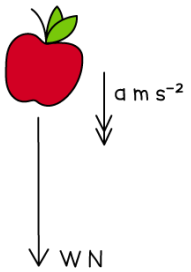

AN APPLE, OF MASS m kg, FALLING UNDER THE FORCE OF ITS OWN WEIGHT ONLY.

APPLYING N2L = "F = ma":
WEIGHT IS THE ONLY FORCE ACTING ON THE APPLE
$W = ma$
TAKING THE POSITIVE DIRECTION AS DOWNWARDS
$a = g$ (ACCELERATION DUE TO GRAVITY)
$\therefore W = mg$

THIS APPLIES TO ANY OBJECT OF MASS m kg, NOT JUST APPLES!

Copyright © Save My Exams. All Rights Reserved

Your notes

Worked Example

A train engine of mass 5 tonnes is moving along a straight track with constant acceleration. In an eight second period, it covers a distance of 250 m at which point it has velocity 35 m s^{-1}.

(a) Find the acceleration of the train engine.

a) Step 1: Draw a sketch

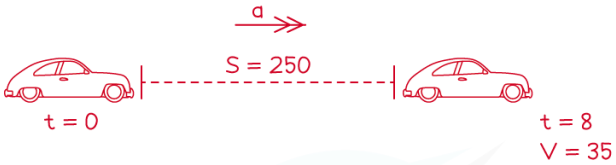

Write down known values...

$t = 8$
$S = 250$
$V = 35$

(We also know mass, but with no force mentioned in part (a), we cannot use N2L, "F = ma" to find the acceleration)

...and what we are finding
a

Step 2: Choose the appropriate ('suvat') equation

$$"s = vt - \frac{1}{2}at^2"$$

Step 3: Solve

$$250 = 35 \times 8 - \frac{1}{2} \times a \times 8^2$$

$$\therefore a = 0.9375 \text{ ms}^{-2}$$

Copyright © Save My Exams. All Rights Reserved

(b) Find the resultant force acting on the train engine.

Your notes

b) Step 1: We can use the diagram from part (a)

Step 2: Choose the appropriate equation – it must be 2NL, as 'resultant force' is involved

"F = ma"

m = 5 tonnes = 5000 kg kg is the standard unit for mass

Step 3: Solve

$F_{net} = 5000 \times 0.9375$ F_{net} is resultant force

$\therefore F_{net} = 4687.5$ N

Copyright © Save My Exams. All Rights Reserved

(c) Given that the (only) driving force is 6250 N, find the total of any resistive forces acting on the train engine.

c) Step 1: Sketch a diagram

Step 2: Choose an appropriate equation

Logical thinking in this case:

"F_{net} = Driving forces – Resistive forces"

$F_{net} = D - R$

Step 3: Solve

$4687.5 = 6250 - R$

$R = 6250 - 4687.5$

$\therefore$ Total of any resistive forces is 1562.5 N

Copyright © Save My Exams. All Rights Reserved

Examiner Tips and Tricks

- Sketching, or adding to given, diagrams can help to understand problems and can help you decide which direction to take as positive.
- Remember that *F* (in N2L) is the resultant force, sometimes seen as F_{net}- be careful not to get it muddled with any other forces that are, or could be, denoted by *F*. To avoid confusion, use quote marks around "*F = ma*" to show that the quoted *F, m* and *a* do not necessarily correspond to *F, m* or *a* mentioned in the question.
- Depending on which direction is taken as positive, the resultant force, *F* N, may be negative and/or acceleration, a m s^{-2}, may be negative (this is particularly relevant for vertical motion)

Your notes

Connected bodies (ropes & tow bars)

What are connected bodies/particles?

- The phrase **connected particles** refers to situations where **two** (or more) bodies (objects) are connected in some way.
- Common examples include:
  - a car towing a caravan or trailer
  - a load being raised by a lift (**3.2.3**)
  - two bodies connected by a rope that passes over a pulley (**3.2.4**)
- Problems may involve the particles being stationary (in **equilibrium**) or in **motion** – in the latter case **Newton's Laws of Motion** will be involved.

What are Newton's laws of motion?

- Full details of Newton's Laws of Motion can be found in **3.2.1 F = ma** but **Newton's Third Law of Motion** (N3L) is particularly relevant for the problems covered in this note
  - For two bodies, the force exerted on the second body by the first is equal in magnitude but opposite in direction to the force exerted on the first body by the second

How are ropes modelled?

- A **rope** is typically used to connect two inanimate objects such as blocks, crates, containers, etc
- A **rope** would be **modelled** as a **light inextensible string**
  - The modelling assumption **light** means the rope's mass is so small relative that it can be ignored
    - Mathematically this means that the **tension** in the string is constant throughout its length (i.e. **tension** is **equal** on **both sides** of the string)
  - The modelling assumption **inextensible** means the rope cannot be extended/shortened in length
    - Mathematically this means that both connected particles will have the same **acceleration**
  - A **string** would only be in **tension** (not **thrust** – see tow bars for thrust)
  - A **string** can go **slack** – for example if one particle is disconnected – in which case the model being used would no longer apply and a new scenario would ensue with no tension involved

© 2025 Save My Exams, Ltd.

THE CONNECTION BETWEEN TWO BLOCKS (ROPE) WOULD BE MODELLED AS A LIGHT INEXTENSIBLE STRING, WITH TENSION IN THE STRING ACTING AWAY FROM THE BLOCKS

Copyright © Save My Exams. All Rights Reserved

Your notes

What are tow bars and how are they modelled?

- A **tow bar** is a mechanism by which a car (or similar vehicle) can be connected to a caravan, trailer (or similar)
- A **tow bar** is modelled as a **light** (inextensible) **rod**
  - A **rod** can either be in **tension** or **thrust** (compression)
    - For a car towing a caravan by a light rod, the rod would be in **tension** when the car is **accelerating**, **thrust** when it is **decelerating**

THE CONNECTION BETWEEN A CAR (TOW BAR) AND A CARAVAN (TOW HITCH) WOULD BE MODELLED AS A LIGHT ROD

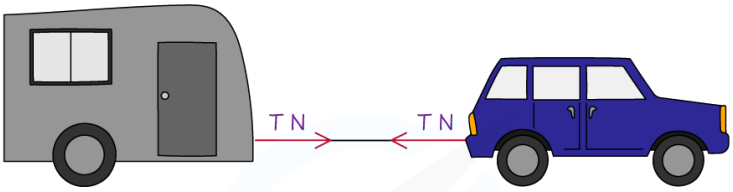

UNDER ACCELERATION THE ROD WOULD BE IN TENSION (USUALLY DENOTED BY T N)

UNDER DECELERATION THE ROD WOULD BE IN THRUST (THRUST IS ALSO USUALLY DENOTED BY T N SO BE CAREFUL WHICH WAY THOSE ARROWS ARE FACING!)

Copyright © Save My Exams. All Rights Reserved

What is a coupling?

- A **coupling** is a general term referring to the connection between two objects – usually a relatively complex system, such as how two train carriages are connected – but for **modelling** purposes is simplified to a **string** or **rod**

How do I solve problems involving tow bars and ropes?

- If a particle is in **motion** in the direction being considered, then **Newton's Laws of Motion** apply so use "***F = ma***" (N2L)

- If a particle is **not** in motion in the direction being considered then "***F = 0***" can be used, although
- "***F = ma***" with "***a = 0***" will also work
- Step 1.Draw a series of diagrams,
  - Label the forces and the positive direction of motion.
  - Colour coding forces acting on each particle may help.
- Step 2. Write equations of motion, using "F = ma " (or if no motion "***F = 0***")
- Step 3. Solve the relevant equation(s) and answer the question
  - Some trickier problems may lead to simultaneous equations
- If **both** particles are travelling in the **same direction** the **system** can be treated as **one** particle (as well as separate particles)
  - There is **no tension** at either side of the string when the system is treated as one - mathematically they cancel each other out
- For **constant acceleration** the '*suvat*' equations could be involved

Your notes

© 2025 Save My Exams, Ltd.

Your notes

THE WHOLE SITUATION:

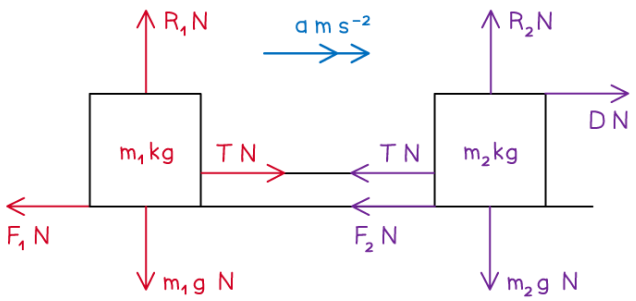

TREATING THE PARTICLES AS ONE:

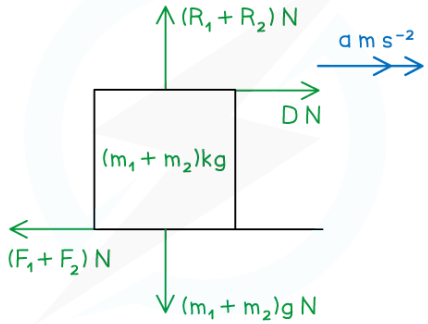

TREATING EACH PARTICLE SEPARATELY:

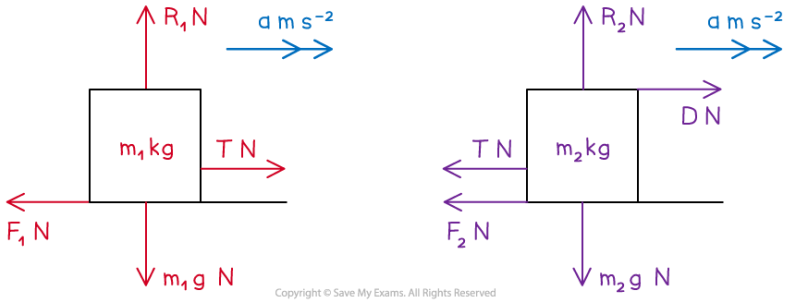

Copyright © Save My Exams. All Rights Reserved

- $a\ m\ s^{-2}$ is the acceleration of the system
- m_1 kg and m_2 kg are the masses of the two bodies
- $m_1 g$ N and $m_2 g$ N are the weights of the two bodies
- T N is the tension in the string
- D N is the driving force of the system
- F_1 N and F_2 N are the resistive forces acting on the two bodies
- R_1 N and R_2 N are the normal reaction forces of the two bodies
- * You do not necessarily need all diagrams but if in doubt draw all as they may help you to understand the problem more clearly **

How do I find equations for problems involving tow bars and ropes?

Your notes

- Form the equations as follows:
- **Treating the particles as one**
  - Horizontally (→) $D - (F_1 + F_2) = (m_1 + m_2)a$
  - There is no vertical motion so use "F = 0"
  - (↑) $(R_1 + R_2) - (m_1 + m_2)g = 0$
  - ($F = ma$ with $a = 0$ will lead to the same equation)
- **Treating each particle separately**
  - Particle 1: Horizontally (→) $T - F_1 = m_1a$
  - Vertically(↑) $R_1 - m_1g = 0$ (No motion)
  - Particle 2: Horizontally (→) $D - T - F_2 = m_2a$
  - Vertically(↑) $R_2 - m_2g = 0$ (No motion)
- You do not necessarily need all equations but if in doubt attempt all and it may help you make progress

Worked Example

A small plane, of mass 1250 kg, is towing a glider, of mass 300 kg, along a runaway prior to take-off and accelerates from rest at a constant 1.5 m s^{-2}.
During the take-off period the plane experiences resistive forces of 580 N, whilst the glider experiences resistive forces of 255 N.
The plane and glider are coupled by a tow rope which is modelled as a light inextensible string.

(a) Find the engine force from the plane.

Step 1: Sketch appropriate diagrams

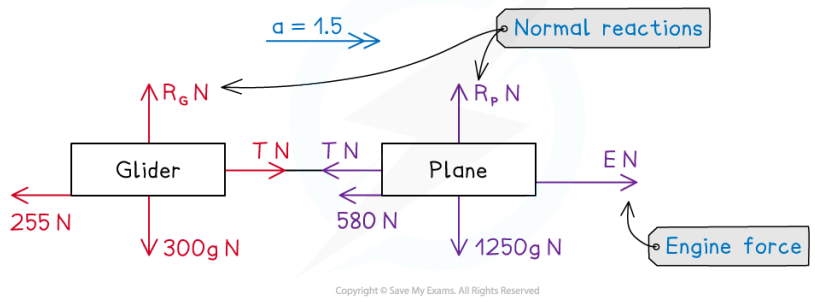

Copyright © Save My Exams. All Rights Reserved

Step 2: Write equations for each situation

System as one:

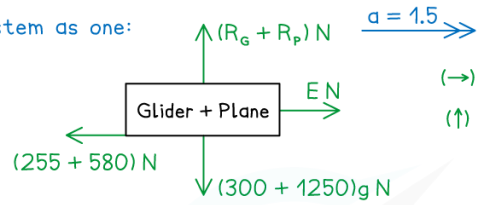

$(\rightarrow)$ $E - 835 = 1550 \times 1.5$

$(\uparrow)$ $R_G + R_P - 1550g = 0$

Glider only:

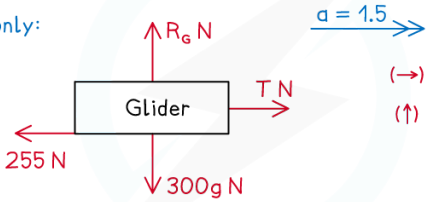

$(\rightarrow)$ $T - 255 = 300 \times 1.5$

$(\uparrow)$ $R_G - 300g = 0$

Plane only:

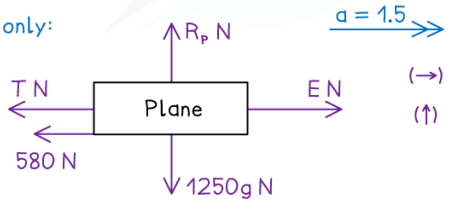

$(\rightarrow)$ $E - T - 580 = 1250 \times 1.5$

$(\uparrow)$ $R_P - 1250g = 0$

Copyright © Save My Exams. All Rights Reserved

(a) Treat system as one to eliminate tension

Horizontally $(\rightarrow)$ from Step 2 above

$E - 835 = 2325$

Step 3: Solve

$\therefore E = 3160$ N

Copyright © Save My Exams. All Rights Reserved

(b) Find the tension in the tow rope.

(b) Looking at glider only

Horizontally $(\rightarrow)$ from Step 2 above

$T - 255 = 450$

Step 3: Solve

$\therefore T = 705$ N

Notice that neither all diagrams nor all equations were needed to answer this question.
(For example, there was no vertical motion involved.)
We've included them here for completeness and highly recommend you do all if you are struggling to understand or start a problem.

Copyright © Save My Exams. All Rights Reserved

Your notes

Examiner Tips and Tricks

- Sketch diagrams or add to any diagrams given in a question.
- If in doubt of how to start a problem, draw **all** diagrams and try writing an equation for each. This may help you make progress as well as picking up some marks.
- Do not dismiss an equation in a direction because there is no motion – use "$F = 0$" to write an equation for that direction and you may be able to find one of the unknowns in a problem.

Your notes

© 2025 Save My Exams, Ltd.

Your notes

Connected Bodies – The Lift Problem

What is the lift problem?

- The **lift problem** involves objects (particles) that are **directly** in **contact** with each other – typically a **person** or **crate** in a **lift**
- If it is not a person in the lift the object is often referred to as a **load**
- There may be **more** than **two objects** involved – for example **two crates** stacked on top of each other on a lift floor
- **Vertical** motion is involved so use g m s^{-2}, the **acceleration due** to **gravity**, where appropriate
  - Gravity always acts **vertically downwards**
  - Depending on the **positive** direction chosen – and which other forces are acting vertically – **acceleration** (a m s^{-2}) may be **positive** or **negative**
- Remember that **acceleration** links $F = ma$ (**N2L**) and the '*suvat*' equations

How do I solve 'lift problem' type questions?

- Lift problems will only consider motion in the **vertical** direction
- As motion is involved **Newton's Laws of Motion** apply so use "$F = ma$" (N2L)
- The steps for solving lift problems are the same as for solving **rope problems**
- As **both** the **lift** and **load** are travelling in the **same** direction the system can be **treated as one** particle (as well as separate particles)
  - There is no **reaction force** acting on the **lift** or **load** when treating the particle as one - mathematically they cancel each other out
  - You can think of the upward R N as counteracting the person's weight **and** moving the load upwards; N3L applies so there must be an equal force acting in the opposite direction; - you can think of this as the force keeping the person in contact with the lift floor whilst it is moving
- For **constant acceleration** the '*suvat*' equations could be involved

© 2025 Save My Exams, Ltd.

Your notes

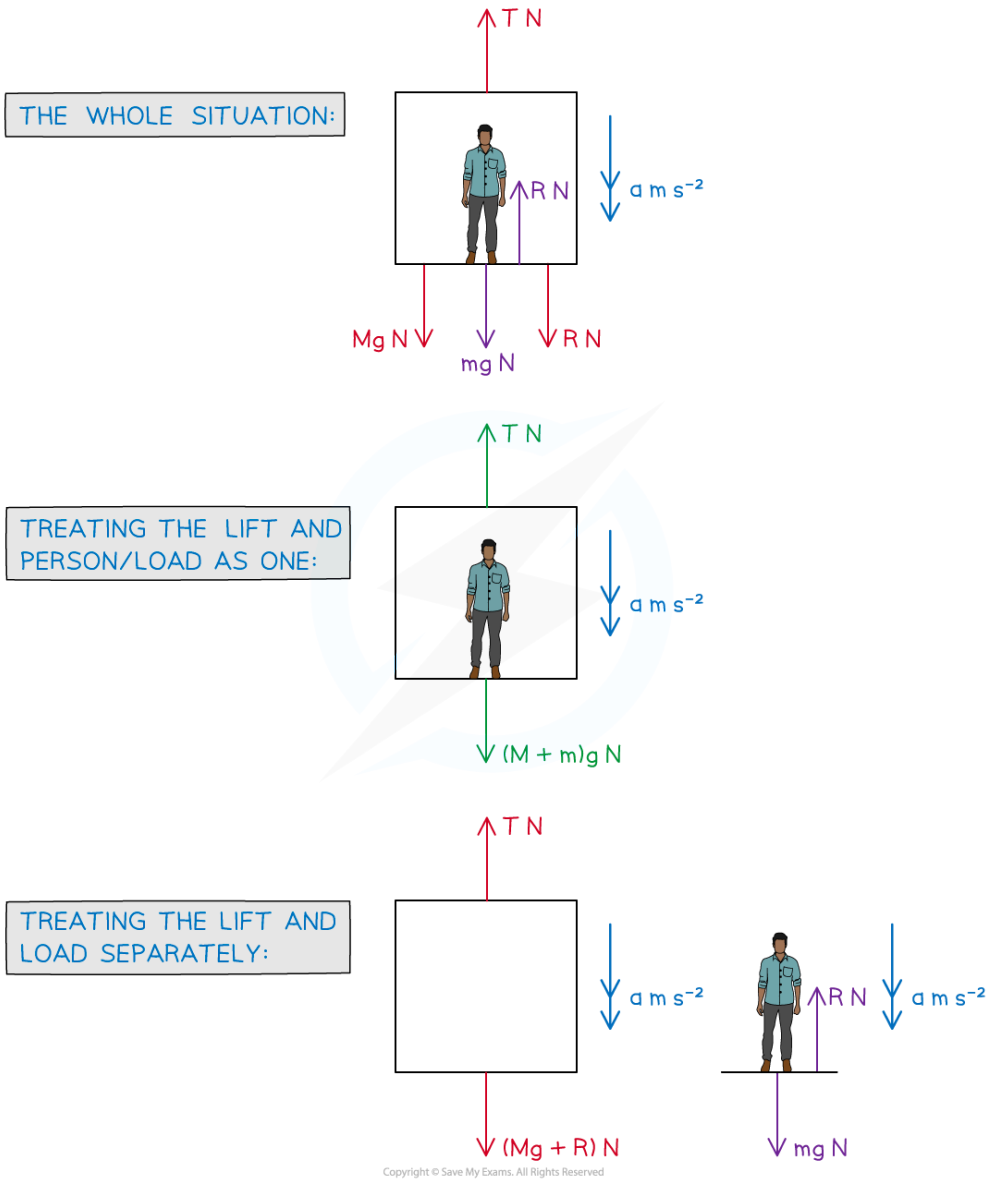

How do we form the equations for problems involving lifts?

- Form the equations as follows:
  - Treating the lift and person/load as one

    (↓) $(M + m)g - T = (M + m)a$
  - Treating the lift and person/load separately

    Lift: (↓) $(Mg + R) - T = Ma$

  Person/load: (↓) $mg - R = ma$
- You do not necessarily need all equations but if in doubt attempt all and it may help you make progress

Your notes

Worked Example

A lift of mass 800 kg is moving vertically downwards with acceleration 0.3 m s^{-2}. A load of mass m kg lies on the floor of the lift. The reaction force exerted on the load by the lift is 399 N.

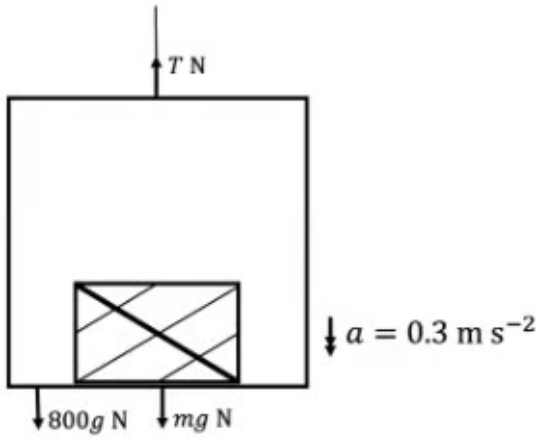

(a) Briefly explain how the force of 800g N arises in this problem.

(a) The force 800g N is the weight of the lift. "W = mg" so the weight of the lift is the product of its mass, 800 kg, and g m s^{-2}, the acceleration due to gravity. Weight always acts vertically downwards.

Step 1: Sketch appropriate diagrams
(You can add to the given diagram)

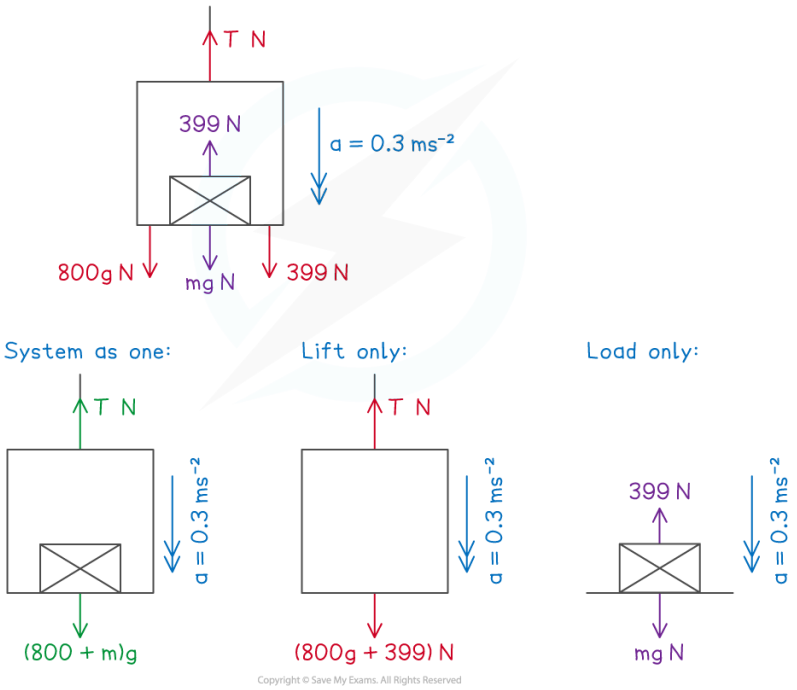

Copyright © Save My Exams. All Rights Reserved

Step 2: Write equations for each situation

$(800 + m)g - T = (800 + m) \times 0.3$

$(800g + 399) - T = 800 \times 0.3$

$mg - 399 = m \times 0.3$

Step 3: Solve the appropriate equations (s)

(b) Find the mass of the load, m kg.

(b) The "load only" equation involves m only

$mg - 399 = 0.3\,m$

$m(g - 0.3) = 399$

$m = \dfrac{399}{10 - 0.3} = 41.134 \quad g = 10$

$\therefore\ m = 41.1...\ \text{kg}$

(c) Find the tension, T N, in the cable of the lift.

(c) The "lift only" equation involves T only

$(800g + 399) - T = 240$

$T = 800 \times 10 + 399 - 240 = 8159\ \text{N}$

$\therefore\ T = 8160\ \text{N (3 sf)}$

Notice that neither all diagrams nor all equations were needed to answer this question.
(The "system as one" was not needed.)
We've included them here for completeness and highly recommend you do all if you are struggling to understand or start a problem.

Copyright © Save My Exams. All Rights Reserved

Your notes

Examiner Tips and Tricks

- Sketch diagrams or add to any diagrams given in a question.
- If in doubt of how to start a problem, draw **all** diagrams and try writing an equation for each. This may help you make progress as well as picking up some marks.
- Watch out for "hidden lift" problems – we're not strictly talking elevators here! For example, a load being raised by a crane; the "lift" would be a platform (such as a pallet) and the "lift cable" would be the cable connecting the crane to the load. Another common alternative is a fast rising (or falling) fairground ride.

Your notes

Connected Bodies – Pulleys

What is a pulley (or peg)?

- A **pulley** is a wheel like device that rotates as a string passes over it allowing motion of any particles attached to the string
  - The term **'string'** can refer to any rope, cable or chain
  - **Strings** can be assumed to be **light** and **inextensible**
- Pulleys allow a (inextensible) **string** to change its **orientation**.
- In A level mathematical models, pulleys will always be **smooth** and **light**, so there is no friction involved at the pulley and its mass is negligible
- A peg is similar to a pulley but is a fixed point that a particle can be suspended from (like a nail in a wall)

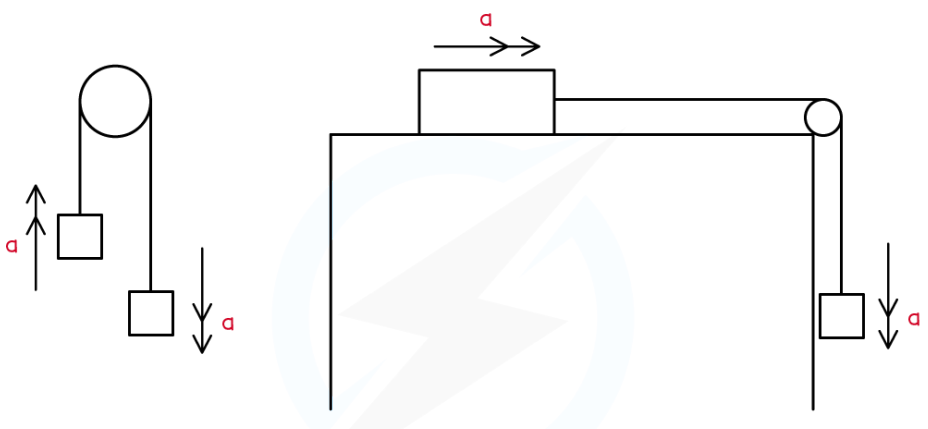

EXAMPLES OF PARTICLES CONNECTED BY A LIGHT INEXTENSIBLE STRING PASSING OVER A SMOOTH PULLEY.
NOTE HOW, IN BOTH CASES, THE PARTICLES ARE TRAVELLING IN DIFFERENT DIRECTIONS.

Copyright © Save My Exams. All Rights Reserved

How do I solve pulley questions?

- In all pulley questions the particles are moving in **different** directions so it is best if they are considered **separately** as opposed to treating them as one object
- If a particle is in **motion** in the direction being considered then **Newton's Laws of Motion** apply so use "$F = ma$" (N2L)
- For **constant acceleration** the '*suvat*' equations could be involved
- Step 1. Draw a series of diagrams
  - Label the forces and the positive direction of motion for each particle.

- Colour coding forces acting on each particle may help

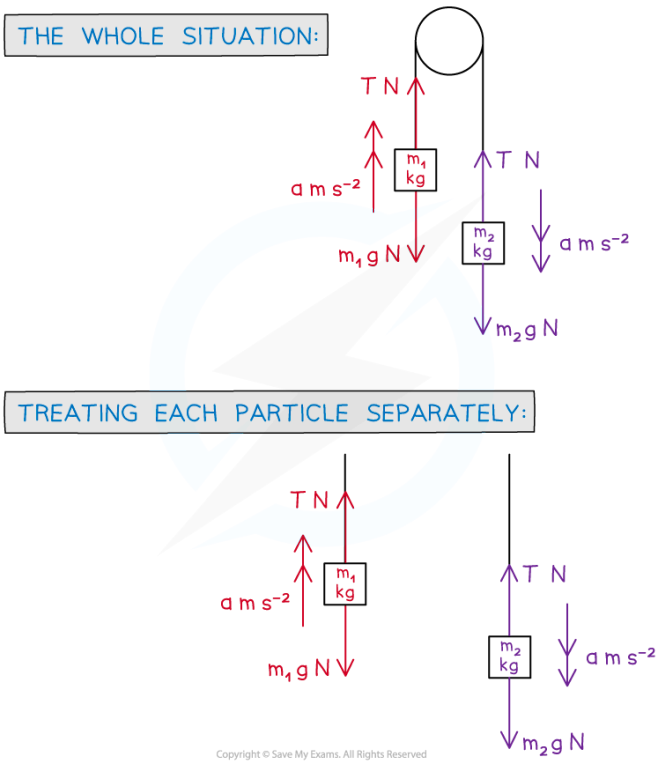

- Step 2. Write equations of motion, using "*F* = *ma*"
  - **Equations 1** and **2**: Treating each particle separately

$$(\uparrow)\ T - m_1 g = m_1 a$$

$$(\downarrow)\ m_2 g - T = m_2 a$$

- Step 3. Solve the relevant equation(s) and answer the question
  - Some trickier problems may lead to simultaneous equations

Worked Example

A block of mass 25 kg lies on a smooth horizontal table. A light, inextensible string passes over a smooth pulley attached to the edge of the table. The string connects the 25 kg block to another, of mass 60 kg, that hangs freely as shown in the diagram below.
The system is released from rest.

Your notes

Your notes

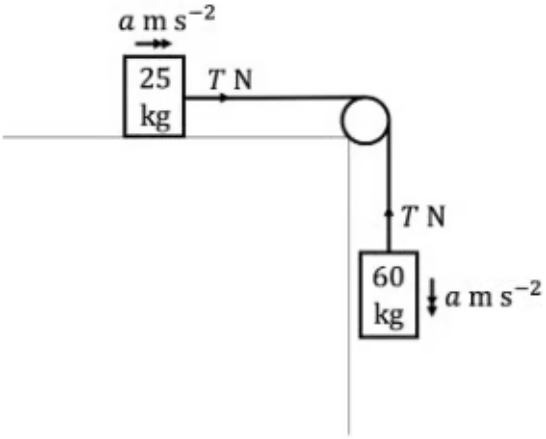

Find the tension, T N , in the string and the acceleration, a m s^{-2} , of the system.

Step 1: Sketch appropriate diagrams (You can add to the one given)

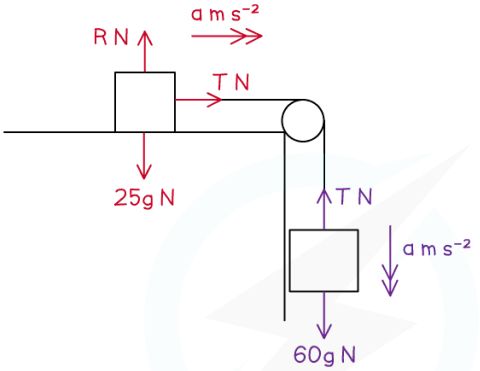

25 kg block only:

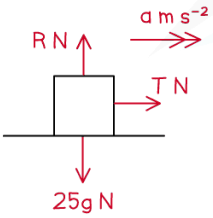

60 kg block only:

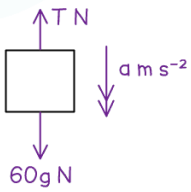

Copyright © Save My Exams. All Rights Reserved

Step 2: Write equations for each

(→) $T = 25a$

(↓) $60g - T = 60a$

(We are not concerned with R so do not need to consider the vertical direction)

Step 3: Solve the appropriate equation(s)

Both equations involve T and a so solve simultaneously

$T = 25a$ *

$60g - T = 60a$ **

Substitute * into ** $60g - 25a = 60a$

$85a = 60g$

$a = \frac{12}{17}g = 7.0588...$

$T = 25 \times 7.0588... = 176.470...$

∴ $T = 176$ N (3 s.f.)

$a = 7.06$ m s^{-2} (3 s.f.)

Copyright © Save My Exams. All Rights Reserved

Your notes

Examiner Tips and Tricks

- Sketch a diagram or add to a diagram given in a question.
- All pulleys are smooth and in most (but not all) the pulley itself can be ignored.
- In pulley questions the particles will be moving in different directions - so each particle will need to be considered separately.
- If one particle is on a horizontal surface (such as a desk or table) then the weight only need be considered if friction is involved (since F = μR and R is related to weight).