RIVERS CONDOS

RIVERFRONT PARK LLC

ARCHITECTURAL ABBREVIATIONS

@	AT
&	AND
#	NUMBER/POUND
℄	CENTER LINE
A	
AB	ANCHOR BOLT
AC	AIR CONDITIONING
ACT	ACOUSTIC TILE
AD	AREA DRAIN
ADJ	ADJUSTABLE
AFF	ABOVE FINISH FLOOR
ALT	ALTERNATE
ALUM	ALUMINUM
ANOD	ANODIZED
AWP	ACOUSTICAL WALL PANEL
B	
B	BASE
BD	BOARD
BL	WINDOW BLIND
BLDG	BUILDING
BM	BEAM
BO	BOTTOM OF...
BOT	BOTTOM
BSMT	BASEMENT
BTWN	BETWEEN
BV	BRICK VENEER
C	
C	CHANNEL
CB	CATCH BASIN
CG	CORNER GUARD
CJ	CONTRACTION JOINT/CONTROL JOINT
CLG	CEILING
CMU	CONCRETE MASONRY UNIT
COL	COLUMN
COMP	COMPOSITION
CO	CLEAN OUT
CONST	CONSTRUCTION
CONT	CONTINUOUS
COORD	COORDINATE
CORR	CORRIDOR
CPT	CARPET
CT	CERAMIC TILE
D	
D	DEPTH
DBL	DOUBLE
DEMO	DEMOLISH
DEPT	DEPARTMENT
DF	DRINKING FOUNTAIN
DIA	DIAMETER
DIAG	DIAGONAL
DIM	DIMENSION
DISP	DISPENSER
DN	DOWN
DR	DOOR
DS	DOWNSPOUT
DW	DISHWASHER
DWG	DRAWING
E	
E	EAST
EA	EACH
EC	ELASTOMERIC COATING
EIFS	EXTERIOR INSULATION FINISH SYSTEM
EJ	EXPANSION JOINT
EL	ELEVATION
ELEC	ELECTRICAL
ELEV	ELEVATOR/ELEVATION
EP	ELECTRICAL PANEL/EPOXY PAINT
EQ	EQUAL
EQUIP	EQUIPMENT
ETR	EXISTING TO REMAIN
EWC	ELECTRIC WATER COOLER
EXIST	EXISTING
EXP	EXPANSION
EXT	EXTERIOR
F	
FA	FIRE ALARM
FB	FLAT BAR
FC	FINISH COATING (POWDER COATING OR OTHER PREFINISHED COATING)
FDC	FIRE DEPARTMENT CONNECTION
FE	FIRE EXTINGUISHER
FEC	FIRE EXTINGUISHER CABINET
FF	FINISH FLOOR
FH	FIRE HYDRANT
FIN	FINISH
FLR	FLOOR
FO	FACE OF
FOC	FACE OF CONCRETE
FOF	FACE OF FINISH
FOM	FACE OF MASONRY
FOS	FACE OF STUD
FRT	FIRE RETARDANT TREATED
	FOOT OR FEET
FWP	FABRIC WRAPPED PANEL
G	
GA	GAUGE
GALV	GALVANIZED
GL	GLASS
GYP	GYPSUM
H	
H	HARDENER
HB	HOSE BIBB
HC	HOLLOW CORE/HANDICAPPED
HDR	HEADER
HM	HOLLOW METAL
HORIZ	HORIZONTAL
HSS	HOLLOW STRUCTURAL STEEL
HVAC	HEATING/VENTILATING/ AIR CONDITIONING
HW	HOT WATER
I	
ID	INSIDE DIAMETER
INSUL	INSULATION
INT	INTERIOR
J	
JAN	JANITOR
JT	JOINT
K	
KIT	KITCHEN
L	
L	LINOLEUM
LAV	LAVATORY
M	
MATL	MATERIAL
MAX	MAXIMUM
MB	MACHINE BOLT/MARKER BOARD
MC	METAL CEILING
MDO	MEDIUM DENSITY OVERLAY
MECH	MECHANICAL
MEZZ	MEZZANINE
MFR	MANUFACTURER
MIN	MINIMUM/MINUTE
MISC	MISCELLANEOUS
MO	MASONRY OPENING
MP	METAL PANELING
MT	MARBLE TILE
MTL	METAL
MULL	MULLION
N	
N	NORTH
NIC	NOT IN CONTRACT
NO OR #	NUMBER
NOM	NOMINAL
NTS	NOT TO SCALE
O	
OA	OVERALL
OC	ON CENTER
OD	OUTSIDE DIAMETER
OFCI	OWNER FURNISHED, CONTRACTOR INSTALLED
OH	OVERHEAD
ORD	OVERFLOW ROOF DRAIN
OPNG	OPENING
OPP	OPPOSITE
P	
P	PAINT
PC	PRECAST
PERF	PERFORATE(D)
PJ	PANEL JOINT
PL	PROPERTY LINE, PLATE, OR PLASTIC LAMINATE
REV	REVISE(D)(ION)
PLYWD	PLYWOOD
PLAS	PLASTER
PR	PAIR
PSI	POUNDS PER SQUARE INCH
PT	PRESSURE TREATED
PVC	POLYVINYL CHLORIDE
Q	
QT	QUARRY TILE
R	
R	RADIUS/RISER
RD	ROOF DRAIN
REFR	REFRIGERATOR
REINF	REINFORCE(D)(ING)
RF	RUBBER FLOORING
RM	ROOM
RO	ROUGH OPENING
ROW	RIGHT OF WAY
RTF	RUBBER TILE FLOORING
RWF	RESILIENT WOOD FLOORING
S	
S	SOUTH
SC	SOLID CORE/SPECIAL COATING
SCHED	SCHEDULE
SD	STORM DRAIN/AP DISPENSER
SECT	SECTION
SF	SQUARE FEET
SGL	SINGLE
SHT	SHEET
SHTG	SHEATHING
SHWR	SHOWER
SIM	SIMILAR
SQ	SQUARE
SS	STAINLESS STEEL
ST	STREET/STONE
STD	STANDARD
STL	STEEL
STOR	STORAGE
SUSP	SUSPENDED
SV	SHEET VINYL
SYM	SYMMETRICAL
T	
T	TREAD
TB	TACKBOARD
TBD	TO BE DETERMINED
T & B	TOP AND BOTTOM
TOC	TOP OF CURB/TOP OF CONCRETE
TEL	TELEPHONE
T & G	TONGUE AND GROOVE
TO	TOP OF
TOM	TOP OF MASONRY
TOP	
TOW	TOP OF WALL
TS	TUBE SECTION
TV	TELEVISION
TYP	TYPICAL
U	
UNO	UNLESS NOTED OTHERWISE
U.L.	UNDERWRITER'S LABORATORY
V	
VCT	VINYL COMPOSITION TILE
VERT	VERTICAL
VEST	VESTIBULE
VT	VINYL TILE
VWC	VINYL WALL COVERING
W	
W	WEST
W/	WITH
WC	WATER CLOSET
WD	WOOD
WH	WATER HEATER
WM	WALK-OFF MAT
W/O	WITHOUT
WP	WATERPROOFING
WRGB	WATER RESISTANT GYPSUM BOARD

VICINITY MAP

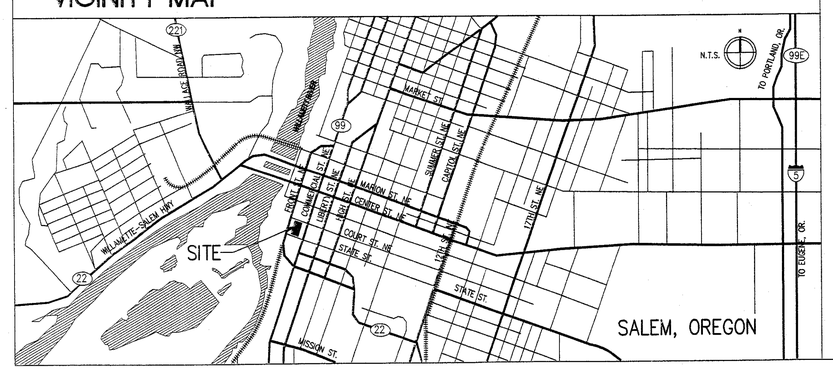

DRAWING LEGEND

MATERIALS

SECTION VIEW

- EARTH
- GRAVEL
- CONCRETE
- ASPHALT
- STEEL
- ALUMINUM
- BRICK
- CMU
- STONE
- FINISH WOOD/VENEER
- ROUGH WOOD – CONTINUOUS
- ROUGH WOOD – DISCONTINUOUS BLOCKING
- BATT INSULATION
- RIGID INSULATION
- ACOUSTICAL PANEL
- WOOD SHEATHING
- GYPSUM BOARD
- GLASS
- MDO/MDF PANEL

AUTOMATIC SPRINKLER SYSTEM REQUIRED

PLAN SYMBOLS

SEE PLAN SHEETS FOR WALL AND PARTITION GRAPHICS

- 8'-0" T.O.W. — PARTIAL HEIGHT WALL
- CB — CATCH BASIN

CEILING SYMBOLS

- GYPSUM WALLBOARD CEILING
- ILLUMINATED EXIT SIGN WITH DIRECTIONAL ARROWS

PREMISES IDENTIFICATION. Approved numbers or addresses shall be placed on all new and existing premises in such a manner as to be plainly visible from the street or road fronting the property, said numbers shall contrast with their background.

TARGETS

- ROOM NAME — ROOM NAME; 213 — ROOM NUMBER; FLOOR LEVEL
- INTERIOR DOOR NO. TARGET: 213A — DOOR LETTER; ROOM NUMBER; FLOOR
- EXTERIOR DOOR NO. TARGET: X123 — FLOOR LEVEL; INDICATES EXTERIOR DOOR
- WALL TYPE TARGET – SEE SHEET A801: ASSEMBLY NUMBER; BASE MATERIAL SIZE; HEAD CONDITION; ACOUSTICAL TREATMENT; 12916S

CMU SIZE	METAL STUD SIZE
A = 4"	A = 2 1/2"
B = 6"	B = 3 5/8"
C = 8"	C = 4"
D = 10"	D = 6"
E = 12"	E = 8"

TARGETS CONT.

- ELEVATION TARGET: 12 / A301 — DETAIL NUMBER; DRAWING SHT. NUMBER
- BUILDING/WALL SECTION TARGET: 12 / A401 — DETAIL NUMBER; 12 / A421 — DRAWING SHT. NUMBER; 12 / A401 — BUILDING SECTION; WALL SECTION
- DETAIL CUT: 12 / A511 — DETAIL NUMBER; DRAWING SHT. NUMBER
- REFERENCE BUBBLE: 12 / A151
- INTERIOR ELEVATION TARGET: 4 / 12 / A601 / 2 / 3 — DETAIL NUMBER; DRAWING SHT. NUMBER; ELEVATION NUMBER

FIRE ALARM SYSTEM REQUIRED

TARGETS CONT.

- GRID LINE: A
- NORTH ARROW: N
- CEILING HEIGHT TARGET: CL7 — CEILING MATERIAL; 10'-0" — CEILING HEIGHT
- SPOT ELEVATION: 0'-0" — TOP ELEVATION; 0'-0" — BOTTOM ELEVATION
- VERTICAL ELEVATION ABOVE DATUM: 10'-0" AFF — ELEVATION RELATED TO DATUM; DATUM
- WINDOW/RELITE TYPE: A — WINDOW/RELITE NUMBER
- LINE TYPES: CENTERLINE; PROPERTY LINE; CONSTRUCTION LINE; HIDDEN LINE; BREAK LINE

PROJECT TEAM

DEVELOPER

MATT SLOAN, DEVELOPER
RIVERFRONT PARK, LLC
423 COURT STREET NE
SALEM, OREGON 97301
T: 916.616.7444
F: 503.961.9800

ARCHITECT

SUSAN WURDEMAN, PROJECT MANAGER
SIENNA ARCHITECTURE COMPANY
411 SW SIXTH AVENUE
PORTLAND, OREGON 97204-1602
T: 503.227.5616
F: 503.227.3590

CIVIL ENGINEER

GREG LOCKE, P.E., S.E.
YOUNGMAN LOCKE ENGINEERS
1375 LIBERTY STREET S.E.
SALEM, OREGON 97302
T: 503.364.8207
F: 503.364.0735

STRUCTURAL ENGINEER

BABRAK AMIRI, P.E., S.E. PRINCIPAL
ASSOCIATED CONSULTANTS, INC.
1340 S.W. BERTHA BOULEVARD, SUITE 200
PORTLAND, OREGON 97219
T: 503.384.0460
F: 503.384.0459

MECHANICAL/ELECTRICAL ENGINEER

(DESIGN/BUILD)

DRAWING INDEX

ARCHITECTURAL

A001	COVER SHEET GENERAL INFORMATION
A002	CODE ANALYSIS SHEET
A003	CODE ANALYSIS SHEET
A101	ARCHITECTURAL SITE PLAN
A102	SITE DETAILS
A200	LEVEL 0: PARKING GARAGE FLOOR PLAN
A201	LEVEL 1: FLOOR PLAN
A202	LEVEL 2: FLOOR PLAN
A203	LEVEL 3: FLOOR PLAN
A204	ELVEL 4: FLOOR PLAN
A205	LEVEL 5: FLOOR PLAN
A206	LEVEL 6: FLOOR PLAN
A207	LEVEL 7: FLOOR PLAN
A208	LEVEL 8: FLOOR PLAN
A209	ROOF PLANS
A301	WEST ELEVATIONS
A302	EAST ELEVATIONS
A303	SOUTH ELEVATIONS
A304	NORTH ELEVATIONS
A305	PARTIAL EXTERIOR ELEVATIONS
A306	PARTIAL EXTERIOR ELEVATIONS
A321	BUILDING SECTION
A322	BUILDING SECTION
A323	BUILDING SECTION
A324	BUILDING SECTION
A325	BUILDING SECTION
A326	BUILDING SECTION
A401	WALL SECTIONS
A402	WALL SECTIONS
A403	WALL SECTIONS
A404	WALL SECTIONS
A410	FOUNDATION DETAILS
A420	EXTERIOR WALL DETAILS
A421	EXTERIOR WALL DETAILS
A422	EXTERIOR WALL DETAILS
A423	BRICK VENEER DETAILS
A430	ROOF DETAILS
A431	ROOF DETAILS
A440	DOOR DETAILS
A451	STOREFRONT DETAILS
A452	STOREFRONT DETAILS
A461	WINDOW AND DOOR DETAILS
A462	WINDOW AND DOOR DETAILS
A501	ENLARGED REFLECTED CEILING PLANS

ARCHITECTURAL CONT.

A601	ENLARGED CORE PLANS: LEVELS 0, 1, AND 2
A602	ENLARGED CORE PLANS: LEVELS 3–8 & ROOF
A603	STAIR S3 AND S4 PLANS & SECTIONS
A604	STAIR SECTIONS: STAIR S1 AND S2
A605	ELEVATOR SECTION AND CHASE DETAILS
A606	STAIR DETAILS
A701	DOOR TYPES, FRAME TYPES, DOOR DETAILS
A702	WINDOW ASSEMBLY ELEVATIONS
A703	WINDOW & STOREFRONT ELEVATIONS
A801	WALL TYPES/ INTERIOR DETAILS
A802	WALL TYPES/ INTERIOR DETAILS

OWNER'S CONSULTANTS STRUCTURAL

S1.1	GENERAL STRUCTURAL NOTES
S1.2	GENERAL STRUCTURAL NOTES CONT'D
S1.3	GENERAL STRUCTURAL NOTES CONT'D
S1.4	MISC. DETAILS
S2.0	BASEMENT/FOUNDATION PLAN
S2.1.1	FIRST FLOOR PT PLAN
S2.1.2	FIRST FLOOR DB PLAN
S2.2.1	SECOND FLOOR PT PLAN
S2.2.2	SECOND FLOOR DB PLAN
S2.3.1	THIRD FLOOR PT PLAN
S2.3.2	THIRD FLOOR DB PLAN
S2.4	4TH FLOOR PT & DB PLAN
S2.5	5TH FLOOR PT & DB PLAN
S2.6	6TH FLOOR PT & DB PLAN
S2.7	7TH FLOOR PT & DB PLAN
S2.8	8TH FLOOR PT & DB PLAN
S2.9	ROOF PT & DB PLAN
S3.1	FOUNDATION DETAILS
S3.2	FOUNDATION DETAILS
S4.1	COLUMN SCHEDULE & DETAILS
S5.1	WALL PANEL DETAILS
S5.2	WALL PANEL ELEVATIONS
S5.3	WALL PANEL ELEVATIONS
S5.4	WALL PANEL DETAILS
S6.1	FRAMING DETAILS
S6.2	FRAMING DETAILS
S6.3	FRAMING DETAILS
S6.4	FRAMING DETAILS
S6.5	FRAMING DETAILS
S6.6	FRAMING DETAILS
S6.7	FRAMING DETAILS

DEFERRED

FIRE SPRINKLER DRAWINGS AND CALCULATIONS
HVAC & PLUMBING DRAWINGS
ELECTRICAL DRAWINGS
PRECAST CONCRETE STAIR DRAWINGS AND CALCULATIONS

GENERAL NOTES

A. DO NOT SCALE THE DRAWINGS.

B. CONTRACTOR TO VERIFY ALL DIMENSIONS AND CONDITIONS PRIOR TO CONSTRUCTION. NOTIFY ARCHITECT OF ANY DISCREPANCIES BEFORE START OF WORK.

C. THE CONTRACT DOCUMENTS ARE COMPLEMENTARY, AND WHAT IS REQUIRED BY ONE SHALL BE AS BINDING AS IF REQUIRED BY ALL; COORDINATE ALL PORTIONS OF THE WORK AS DESCRIBED IN THE CONTRACT DOCUMENTS. REQUEST CLARIFICATION FROM THE ARCHITECT FOR ALL DISCREPANCIES PRIOR TO CONSTRUCTION.

D. UNLESS OTHERWISE NOTED, DIMENSIONS ARE TO BUILDING GRID LINES, FACE OF STUD, FACE OF MASONRY, OR FACE OF CONCRETE WALLS.

E. DOORS AND CASED OPENINGS INDICATED ADJACENT TO WALL INTERSECTIONS SHALL BE LOCATED WITH THE EDGE OF THE FINISHED OPENING SIX INCHES FROM THE ADJACENT WALL UNLESS OTHERWISE INDICATED. ALL OTHER DOORS AND CASED OPENINGS SHALL BE CENTERED BETWEEN NEAREST ADJACENT WALL INTERSECTIONS, UNLESS OTHERWISE DIMENSIONED.

F. CONDITIONS AND DETAILS MARKED "TYPICAL" SHALL APPLY IN ALL CASES, UNLESS SPECIFICALLY INDICATED OTHERWISE. TYPICAL DETAILS NOT REFERENCED ON DRAWINGS APPLY UNLESS NOTED OTHERWISE BY SPECIFIC NOTES AND DETAILS. WHERE NO SPECIFIC DETAIL IS SHOWN, THE CONSTRUCTION SHALL BE IDENTICAL OR SIMILAR TO THAT INDICATED FOR THE TYPICAL CONSTRUCTION ON THE PROJECT.

G. MATERIALS, EQUIPMENT, ETC., NOT INDICATED ON DRAWINGS OR SPECIFIED BUT REQUIRED FOR THE SUCCESSFUL AND EFFICIENT COMPLETION OF THE INSTALLATION, SHALL BE HELD TO BE IMPLIED AND SHALL BE FURNISHED AND INSTALLED FOR NO ADDITIONAL COST.

H. CONSTRUCTION MATERIALS SHALL BE SPREAD OUT IF PLACED ON FLOORS OR ROOF. LOAD SHALL NOT EXCEED THE DESIGN LIVE LOAD PER SQUARE FOOT. DO NOT NOTCH OR DRILL JOISTS, BEAMS, SHEAR WALLS OR LOAD BEARING STUDS OR WALLS WITHOUT PRIOR APPROVAL OF ARCHITECT.

I. SEAL ALL PENETRATIONS FOR CONDUIT, PIPING AND WIRING IN EXTERIOR WALL, ROOF, CEILINGS AND FLOORS ADJACENT TO UNHEATED SPACES.

J. DEFERRED SUBMITTALS: THE ELEMENTS/SYSTEMS LISTED BELOW ARE SUBJECT TO DEFERRED SUBMITTAL IN ACCORDANCE WITH LOCAL JURISDICTIONAL REQUIREMENTS. SUBMITTAL DOCUMENTS FOR DEFERRED SUBMITTAL ITEMS SHALL BE SUBMITTED TO THE ARCHITECT OR ENGINEER OF RECORD WHO SHALL REVIEW THEM AND FORWARD THEM TO THE BUILDING OFFICIAL WITH A NOTATION INDICATING THAT THE DEFERRED SUBMITTAL DOCUMENTS HAVE BEEN REVIEWED AND THAT THEY HAVE BEEN FOUND TO BE IN GENERAL CONFORMANCE WITH THE DESIGN OF THE BUILDING. THE ARCHITECT'S OR ENGINEER'S APPROVAL IS CONTINGENT UPON APPROVAL OF SUBMITTAL BY GOVERNING AUTHORITIES. THE DEFERRED SUBMITTAL ITEMS SHALL NOT BE INSTALLED UNTIL THEIR DESIGN AND SUBMITTAL DOCUMENTS HAVE BEEN APPROVED BY THE BUILDING OFFICIAL.

architecture company
sienna
411 sw sixth
portland, oregon
97204.1602
503.227.5616 v
503.227.3590 f

REGISTERED ARCHITECT — LEE R. WINN — PORTLAND, OR — STATE OF OREGON

RIVERS CONDOS

156 FRONT AVENUE
SALEM, OREGON
RIVERFRONT PARK LLC
429 COURT ST. NE
SALEM, OREGON 97301

project no:25094

PHASE THREE
T.I. FOR
COMMON INTERIOR
SPACES ONLY!

JOB SITE COPY

Date: 12/16/08
Reviewed by:
Salem Fire Department

STATE CERTIFIED PLANS EXAMINER Class "A" 5664 PE — CLAUDE KENNEDY — OK — 9/29/08

CD/PERMIT SET	09.26.07
BUDGET SET	02.20.07
DESIGN DEVELOPMENT	10.10.06
DESIGN REVIEW	03.15.06
PRE-APP SET	03.09.06

© 2007 sienna architecture company
THESE DRAWINGS ARE THE PROPERTY OF SIENNA ARCHITECTURE COMPANY AND ARE NOT TO BE REPRODUCED IN ANY MANNER, EXCEPT WITH THE PRIOR WRITTEN PERMISSION OF SIENNA.

Drawn By Checked By Date

Sheet Title
COVER SHEET

GENERAL INFORMATION

PERMIT 2-114480-B-20 1/20/09
408 114 SOL B2 DATE ISSUED
ADDRESS 156 Front St NE
APPROVED OK
APPROVED
COMPLETE

Sheet Scale
VARIES

Sheet No.
A001

City of Salem Bldg. & Safety Div.

P:\2025\25094\Dwgs\ACAD\CURRENT\SHEET SET\25094-A001.DWG, 9/21/2007 12:21:40 PM, pdk, DWG to PDF.pc5, 1:1

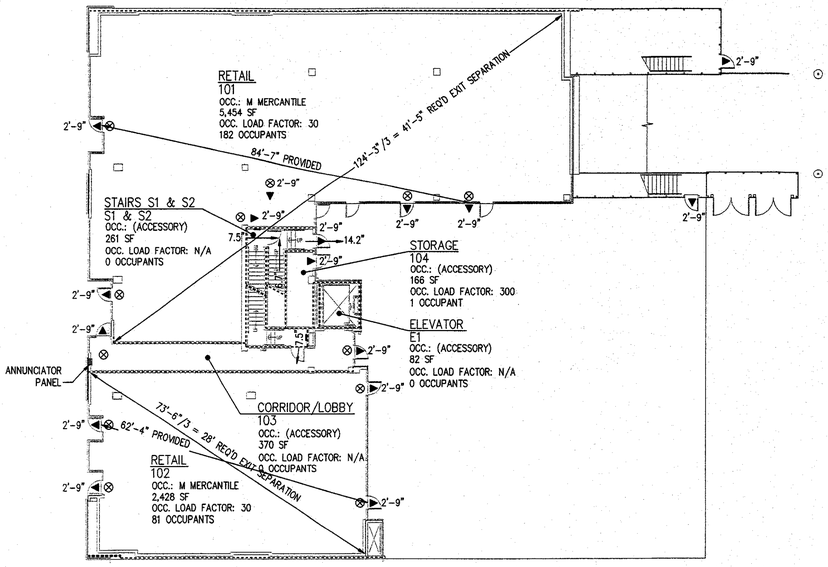

2 LEVEL 1 EGRESS PLAN

1/16"=1'-0"

0 8' 16' 24' 32' 40'

N

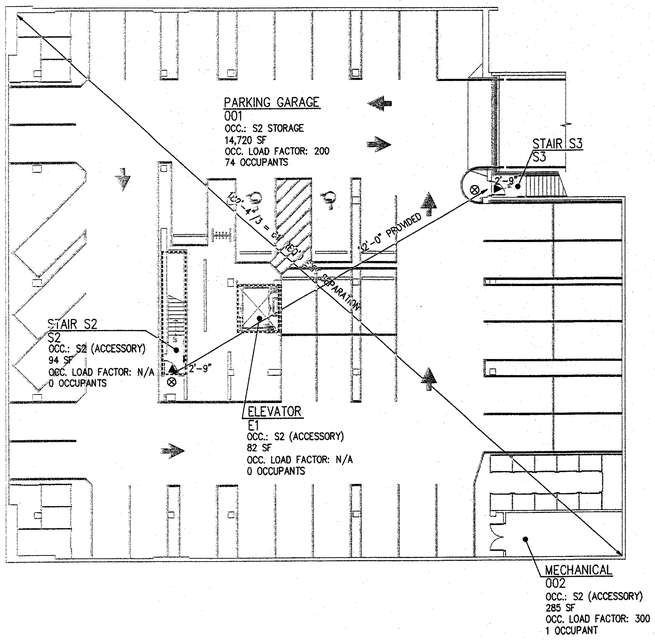

1 PARKING LEVEL EGRESS PLAN

1/16"=1'-0"

0 8' 16' 24' 32' 40'

N

BUILDING CODE ANALYSIS

APPLICABLE CODES:

2007 OREGON STRUCTURAL SPECIALTY CODE (OSSC)
2007 OREGON MECHANICAL SPECIALTY CODE (OMSC)
2005 OREGON PLUMBING SPECIALTY CODE (OPSC)
2005 OREGON ELECTRICAL SPECIALTY CODE (OESC)
2007 OREGON FIRE CODE (OFC)

FLOOR LEVEL	GROSS ENCLOSED AREA
8TH FLOOR	6,520 SF
7TH FLOOR	6,520 SF
6TH FLOOR	6,520 SF
5TH FLOOR	6,520 SF
4TH FLOOR	6,520 SF
3RD FLOOR	6,525 SF
2ND FLOOR	9,052 SF
1ST FLOOR	9,514 SF
PARKING GARAGE	15,925 SF

TOTAL GROSS ENCLOSED AREA
ABOVE PARKING LEVEL: 57,691 SF

CODE SUMMARY:

OCCUPANCY GROUPS: RETAIL: M (MERCANTILE)
OFFICE: B (BUSINESS)
CONDOMINIUMS: R-2 (RESIDENTIAL)
PARKING GARAGE: S-2 (LOW HAZARD STORAGE)

REQUIRED OCCUPANCY SEPARATION (OSSC TABLE 508.3.3)
S-2 to M: 1 HR RATED SEPARATION
S-2 to R-2: 1 HR RATED SEPARATION
M to R-2: 1 HR RATED SEPARATION
B TO M: (NO SEPARATION REQUIRED)
B TO R-2 1 HR RATED SEPARATION

FIRE RESISTIVE REQUIREMENTS BUILDING ELEMENTS (TABLE 601):

STRUCTURAL FRAME:	2 HR
BEARING WALL (INT/EXT):	2 HR
NON-BEARING INTERIOR WALLS:	0 HR
FLOOR/CEILING ASSEMBILIES:	2 HR
ROOF:	1 HR
SHAFT ENCLOSURES:	2 HR
EXIT ENCLOSURES (STAIRWAY):	2 HR
DEMISING WALLS	1 HR (PER 708.3)

TYPE OF CONSTRUCTION (TABLE 503):	1B, SPRINKLERED
OCCUPANCY	S-2, NON-SEPARATED USE
BASIC ALLOWABLE AREA:	79,000 SF
SPRINKLER ALLOWANCE (X3)	237,000 SF
MULTI STORY (X3)	711,000 SF
PROPOSED AREA:	57,577 SF
ALLOWABLE HEIGHT:	160 FEET/11 STORIES
PROPOSED HEIGHT:	90'-0" MAX., 8 STORIES

EXIT WIDTH ANALYSIS:

LEVEL/OCCUPANCY	NET AREA	OCC, LOAD FACTOR	OCCUPANTS	EXIT WIDTH FACTOR	EXIT WIDTH REQ'D	EXIT WIDTH PROV'D
PARKING LEVEL						
PARKING	14,720	200	74	.2	14.8"	
MECHANICAL	285	300	1	.2	0.2"	
LEVEL 1					15.0"	2 X 33"
RETAIL 101	5,773	30	193	.15	29.0"	6 X 33"
RETAIL 102	2,617	30	88	.15	13.2"	3 X 33"
LEVEL 2						
OFFICE 201	5,510	100	56	.2	11.2"	2 X 33"
UNIT 202	990	200	5	.2	1.0"	33"
UNIT 203	1,745	200	9	.2	1.8"	33"
					14.0"	2 X 33"

LEGEND

WALL
2 HOUR F.R. RATED WALL WITH 90 MINUTE RATED DOORS AND OPENINGS
1 HOUR RATED WALL WITH 20 MINUTE RATED DOORS AND OPENINGS AT CORRIDORS
⊗ ILLUMINATED EXIT SIGN
0'-0"◄ EXIT WIDTH

PROJECT SUMMARY

CODE

PROJECT DESCRIPTION: 7 STORIES OF CONDO RESIDENTIAL OVER 1 STORY OF RETAIL AND OFFICE OVER 1 LEVEL OF BELOW GRADE PARKING

ZONING: CB (CENTRAL BUSINESS DISTRICT), FRONT STREET DISTRICT DESIGN OVERLAY

OCCUPANCIES: S-2, PARKING GARAGE, M, MERCHANITLE, B, OFFICE AND R-2, MULTIFAMILY RESIDENTIAL
CONSTRUCTION TYPE: 1B, FULLY SPRINKLERED

AREA SUMMARY

TOTAL CONDO UNITS: 24 UNITS
RETAIL: 5,273 SF
OFFICE: 7,634 SF

PARKING AREA:	
LEVEL B1	15,925 SF
MIXED USE AREA:	
LEVEL 1	9,514 SF
LEVEL 2	9,052 SF
LEVEL 3	6,525 SF
LEVEL 4	6,520 SF
LEVEL 5	6,520 SF
LEVEL 6	6,520 SF
LEVEL 7	6,520 SF
LEVEL 8	6,520 SF
TOTAL MIXED USE AREA:	57,691 SF
TOTAL BUILDING AREA:	73,616 SF
SITE AREA	20,714 SF
PROPOSED FAR	2.8:1

PARKING SUMMARY

BELOW GRADE:	46 STALLS - 44 C, 2 H/C
SURFACE:	19 STALLS - 18 STD, 1 H/C VAN
ADA STALLS:	3 STALLS (2 CAR, 1 VAN)

TOTAL PARKING STALLS: 65 STALLS

BIKE PARKING:	PROVIDED
BELOW GRADE:	5 SPACES
@ GRADE:	7 SPACES
TOTAL:	12 SPACES

PARKING BREAKDOWN:

USE	REQUIRED	PROVIDED
RESIDENTIAL	24 1 PER DWELLING [TABLE 133-1 (1E)]	46 STALLS DESIGNATED
OFFICE	0	0
RETAIL	0	0
TOTAL	21 STALLS	46 STALLS

architecture company
sienna
411 sw sixth
portland, oregon
97204.1602
503.227.5616 v
503.227.3590 f

REGISTERED ARCHITECT
LEE R. WINN
PORTLAND, OR
STATE OF OREGON

RIVERS CONDOS

156 FRONT AVENUE
SALEM, OREGON
RIVERFRONT PARK LLC
429 COURT ST. NE
SALEM, OREGON 97301

project no:25094

CD/PERMIT SET	09.26.07
BUDGET SET	02.20.07
DESIGN DEVELOPMENT	10.10.06
DESIGN REVIEW	03.15.06
PRE-APP SET	03.09.06

© 2007 sienna architecture company
THESE DRAWINGS ARE THE PROPERTY OF SIENNA ARCHITECTURE COMPANY AND ARE NOT TO BE REPRODUCED IN ANY MANNER, EXCEPT WITH THE PRIOR WRITTEN PERMISSION OF SIENNA.

Drawn By cly
Checked By
Date

Sheet Title
CODE ANALYSIS SHEET

Salem Fire Dept

Sheet Scale
1/16"=1'-0"

Sheet No.
A002

City of Salem Bldg. & Safety Div.

P:\2005\2050\1\dwgs\ARCH\N-ARRIU\SHS 1-1 SH\2050-A002.dwg, 9/26/2007 5:01:49 PM, pdf, DWG to PDF.pc5, 1:1

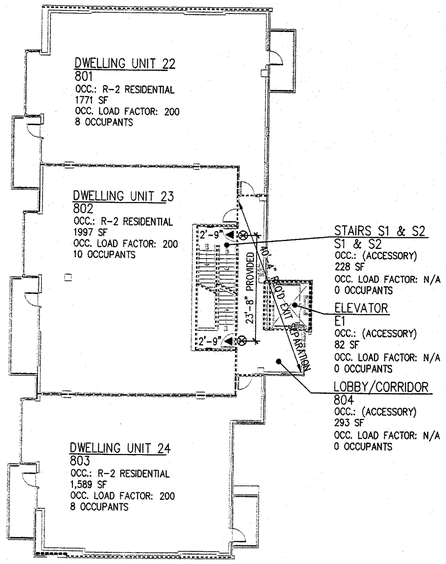

7 LEVEL 8 EGRESS PLAN

0 8' 16' 24' 32' 40'

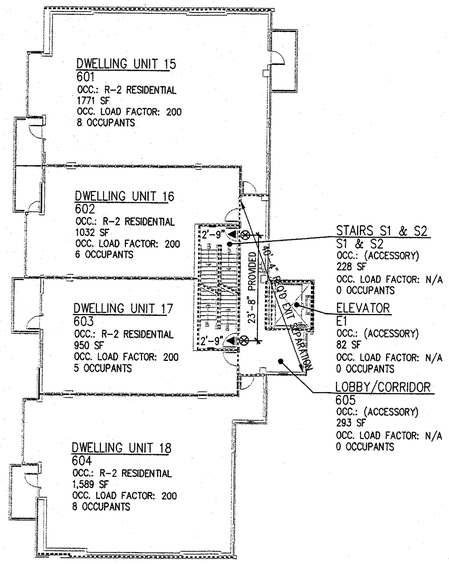

5 LEVEL 6 EGRESS PLAN

0 8' 16' 24' 32' 40'

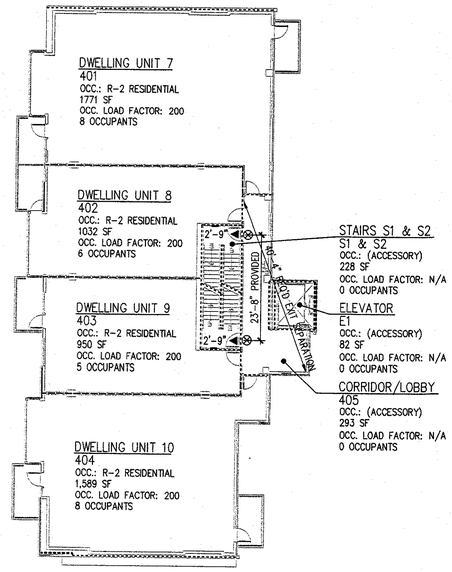

3 LEVEL 4 EGRESS PLAN

0 8' 16' 24' 32' 40'

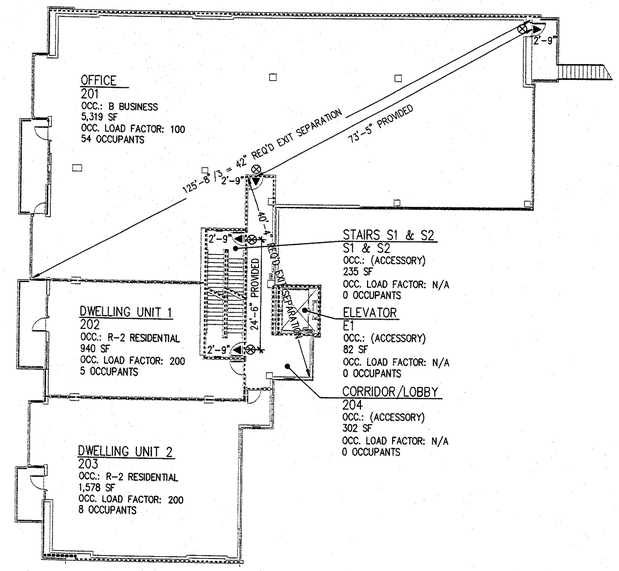

1 LEVEL 2 EGRESS PLAN

0 8' 16' 24' 32' 40'

N

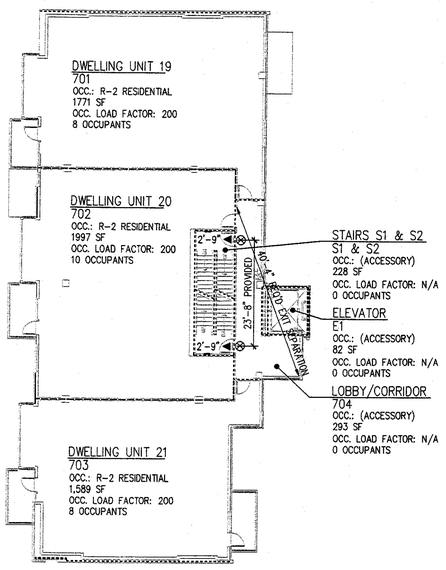

6 LEVEL 7 EGRESS PLAN

0 8' 16' 24' 32' 40'

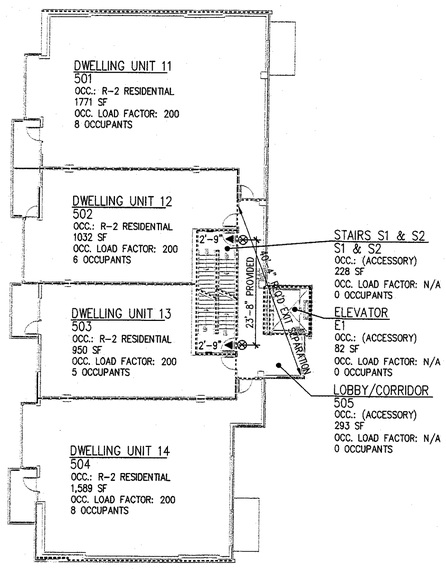

4 LEVEL 5 EGRESS PLAN

0 8' 16' 24' 32' 40'

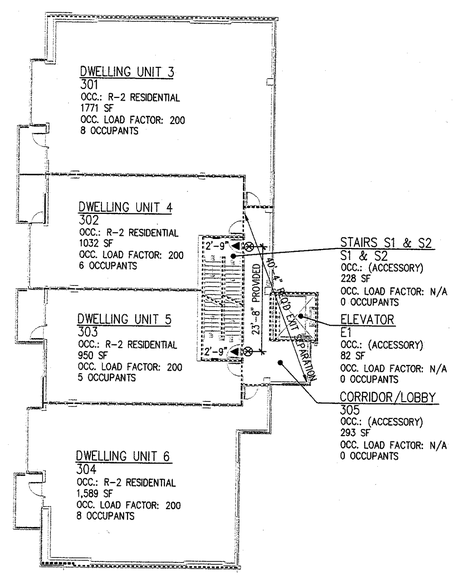

2 LEVEL 3 EGRESS PLAN

0 8' 16' 24' 32' 40'

EMERGENCY EXIT ILLUMINATION IS REQUIRED
At the interior and exterior throughout the egress path, and at exterior exit landings.

ILLUMINATED EXIT SIGNS REQUIRED

LEGEND

- WALL
- 2 HOUR F.R. RATED WALL WITH 90 MINUTE RATED DOORS AND OPENINGS
- 1 HOUR RATED WALL WITH 20 MINUTE RATED DOORS AND OPENINGS AT CORRIDORS
- ⊗ ILLUMINATED EXIT SIGN
- 0'-0"◄ EXIT WIDTH

architecture company
sienna
411 sw sixth
portland, oregon
97204.1602
503.227.5616 v
503.227.3590 f

REGISTERED ARCHITECT
LEE R. WINN
PORTLAND, OR
STATE OF OREGON

RIVERS CONDOS

156 FRONT AVENUE
SALEM, OREGON
RIVERFRONT PARK LLC
429 COURT ST. NE
SALEM, OREGON 97301

project no:25094

PRELIMINARY SET	06.06.07
PERMIT SET	09.28.07
PERMIT DEVELOPMENT	10.10.08
PERMIT SET	01.05.09
PERMIT SET	02.13.09
PERMIT SET	03.13.09

© 2007 sienna architecture company
THESE DRAWINGS ARE THE PROPERTY OF SIENNA ARCHITECTURE COMPANY AND ARE NOT TO BE REPRODUCED IN ANY MANNER, EXCEPT WITH THE PRIOR WRITTEN PERMISSION OF SIENNA.

Drawn By: cly
Checked By:
Date:

Sheet Title
CODE ANALYSIS SHEET

Salem Fire Dept

Sheet Scale
1/16"=1'-0"

Sheet No.
A003

City of Salem
Bldg. & Safety Div.

P:\2005\25094\Dwgs\ACAD\CURRENT\SHEET SET\25094-A003.dwg, 9/26/2007 1:01:23 PM, pdk, DWG to PDF.pc3, 1:1

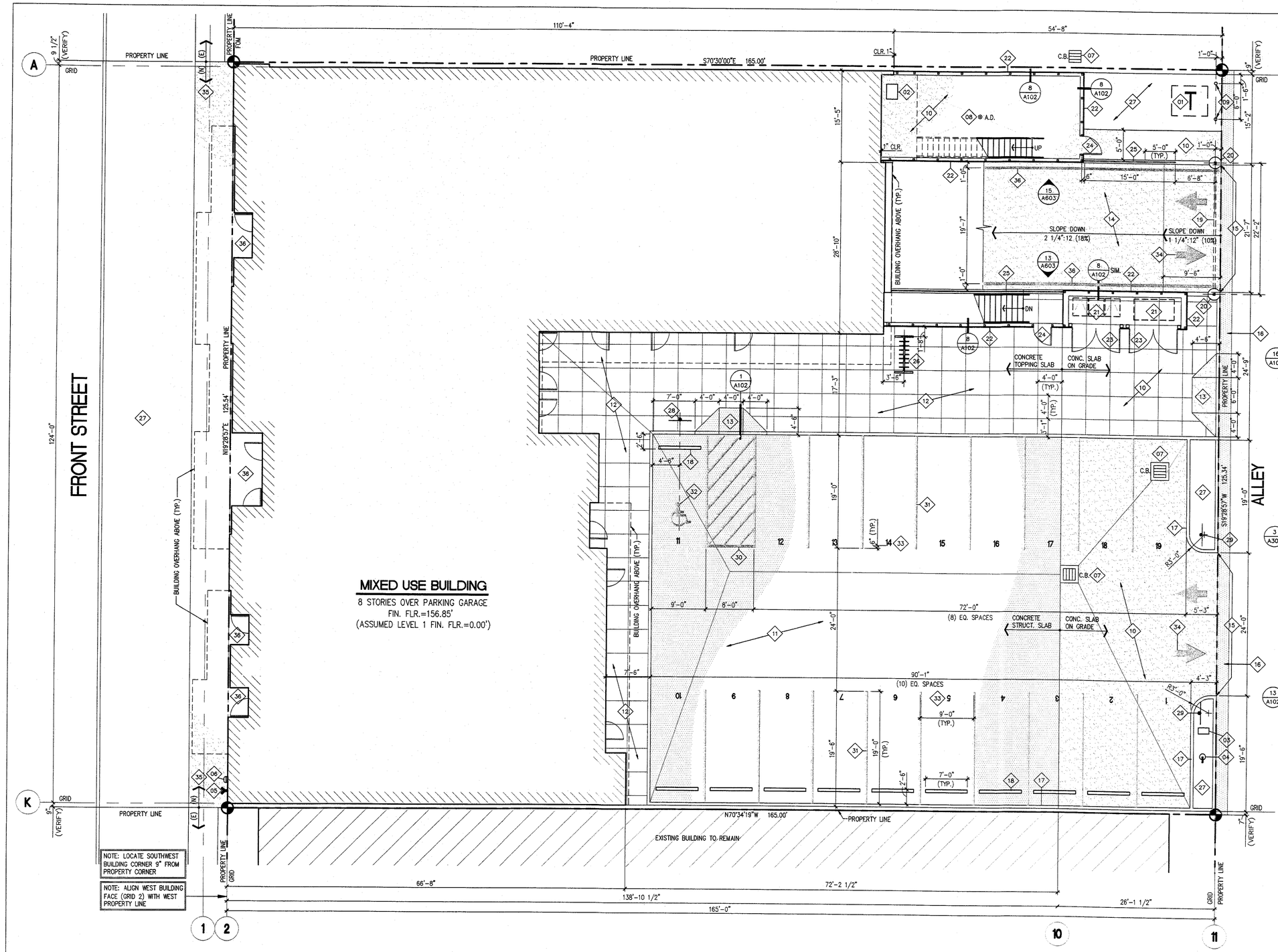

1 ARCHITECTURAL SITE PLAN
1/8"=1'-0"

GENERAL NOTES

A. CONTRACTOR TO VERIFY ALL DIMENSIONS AND CONDITIONS PRIOR TO CONSTRUCTION. NOTIFY ARCHITECT OF ANY DISCREPANCIES PRIOR TO COMMENCING WORK.

B. PROVIDE POSITIVE DRAINAGE AWAY FROM BUILDING.

C. UNLESS OTHERWISE NOTED, DIMENSIONS ON SITE PLAN ARE TO FACE OF CURBS, FACE OF BUILDINGS, FACE OF WALLS AND GRID LINES.

KEYNOTES

01. ELECTRICAL TRANSFORMER. (COORD. LOCATION & INSTALLATION REQUIREMENTS WITH UTILITY.)
02. GAS METER. (COORD. WITH UTILITY.)
03. WATER METER & DOUBLE CHECK BACKFLOW DEVICE. (COORD. WITH UTILITY.)
04. POST INDICATOR VALVE. (COORD. WITH UTILITY.)
05. FIRE DEPARTMENT CONNECTION. (COORD. WITH FIRE SPRINKLER SYSTEM.)
06. FIRE ALARM BELL. (COORD. WITH ELECTRICAL.)
07. CATCH BASIN. (COORD. WITH CIVIL.)
08. AREA DRAIN. (COORD. WITH CIVIL.)
09. 8" DIAMETER CONCRETE FILLED PIPE BOLLARD.
10. 6" REINF. CONC. SLAB ON GRADE. (COORD. WITH CIVIL.)
11. CONC. STRUCTURAL SLAB WITH TRAFFIC COATING TC-1.
12. CONC. TOPPING SLAB WITH TOOLED JOINT PATTERN @ 48" O.C. EACH WAY.
13. ACCESSIBLE CONCRETE CURB RAMP WITH TC-1 TRAFFIC COATING (MAX. SLOPE 1" PER 12").
14. 6" REINF. CONC. RAMP SLAB WITH EMBEDDED ICE MELT SYSTEM. (COORD. WITH ELECTRICAL & CIVIL.)
15. ALIGN PAVEMENT SURFACE WITH EXISTING ALLEY GRADE.
16. PATCH PAVEMENT AT ALLEY TO MATCH EXISTING.
17. 4" TALL X 6" WIDE CONC. CURB. (COORD. WITH CIVIL.)
18. CONCRETE WHEELSTOP ANCHORED TO PAVEMENT (TYP.)
19. VEHICLE HEIGHT LIMIT SIGN & SUSPENDED WARNING BAR ABOVE (SIGN TYPE 08).
20. 24"ø X 36" TALL CONC. PROTECTION AT BASE OF STEEL POST. PAINT CONC. "SAFETY YELLOW".
21. TRASH & RECYCLING RECEPTACLES. (NOT IN CONTRACT.)
22. WOOD & STEEL FENCE ASSEMBLY.
23. PAIR OF 4'x8' WOOD & STEEL GATES. (SEE LEVEL 1 FLOOR PLAN.)
24. HOLLOW METAL DOOR & FRAME ASSEMBLY. (SEE LEVEL 1 FLOOR PLAN.)
25. STEEL PIPE GUARD RAIL ASSEMBLY AT TOP OF CONC. RETAINING WALL.
26. BICYCLE RACK ANCHORED TO CONCRETE WALK. (RACK CAPACITY 7 BICYCLES.)
27. LANDSCAPE PLANTING AREA.
28. POST MOUNT VAN ACCESSIBLE PARKING STALL SIGN (SIGN TYPE 03).
29. POST MOUNT VEHICLE LOAD LIMIT SIGN (SIGN TYPE 05).
30. VAN ACCESSIBLE PARKING STALL ACCESS AISLE WITH 4" WIDE DIAGONAL PAINT STRIPES @ 24" O.C.
31. 4" WIDE PAINTED PARKING STALL STRIPE (TYP.).
32. INTERNATIONAL SYMBOL OF ACCESSIBILITY PAINTED.
33. 12" TALL PARKING STALL NUMERAL (TYP.).
34. VEHICLE DIRECTIONAL ARROW..
35. NEW CONCRETE SIDEWALK PER CITY STANDARDS. ALIGN WITH EXISTING SIDEWALK TO REMAIN.
36. 4" WIDE PAINTED TRAFFIC AISLE STRIPE.
36. CONCRETE TOPPING SLAB.

EMERGENCY EXIT ILLUMINATION IS REQUIRED
At the interior and exterior throughout the egress path, and at exterior exit landings.

architecture company
sienna
411 sw sixth
portland, oregon
97204.1602
503.227.5616 v
503.227.3590 f

REGISTERED ARCHITECT
LEE R. WINN
PORTLAND, OR
STATE OF OREGON

RIVERS CONDOS

156 FRONT AVENUE
SALEM, OREGON
RIVERFRONT PARK LLC
429 COURT ST. NE
SALEM, OREGON 97301

project no:25094

CD/PERMIT SET	09.26.07
BUDGET SET	02.20.07
DESIGN DEVELOPMENT	10.10.06
DESIGN REVIEW	03.15.06
PRE-APP SET	03.09.06

© 2007 sienna architecture company
THESE DRAWINGS ARE THE PROPERTY OF SIENNA ARCHITECTURE COMPANY AND ARE NOT TO BE REPRODUCED IN ANY MANNER, EXCEPT WITH THE PRIOR WRITTEN PERMISSION OF SIENNA.

Drawn By Checked By Date

Sheet Title
ARCHITECTURAL
SITE PLAN

Salem Fire Dept

Sheet Scale
AS SHOWN

Sheet No.
A101

City of Salem
Bldg. & Safety Div.

P:\2005\25094\Dwgs\ACAD\CURRENT\SHEET\25094-A101.dwg, 9/26/2007 1:01:16 PM, pdk, DWG to PDF.pc3, 1:1

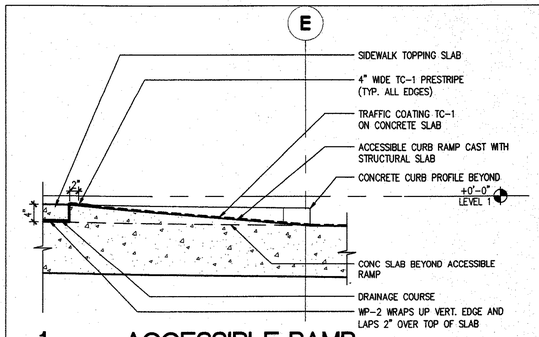

1 ACCESSIBLE RAMP

3/4"=1'-0" DA102-01

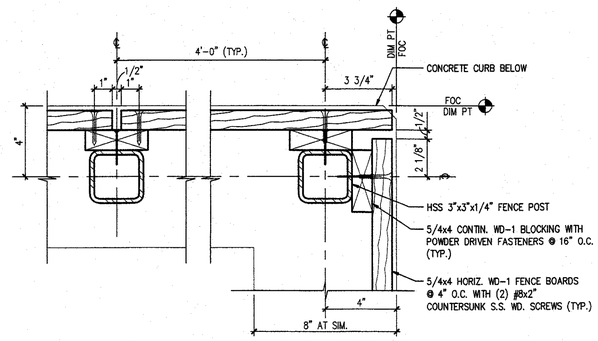

7 FENCE POSTS

3"=1'-0" DA102-07

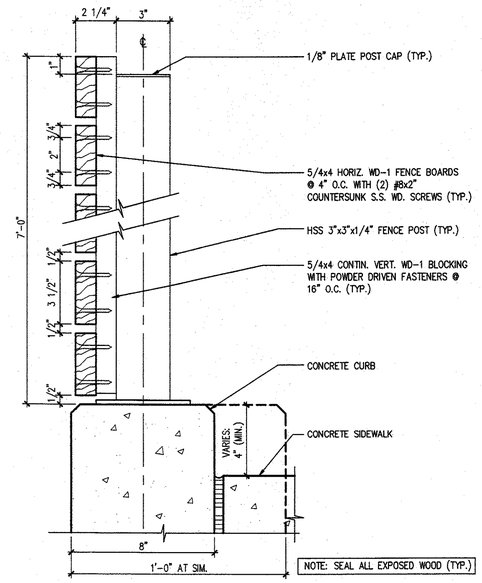

8 FENCE SECTION

3"=1'-0" DA102-08

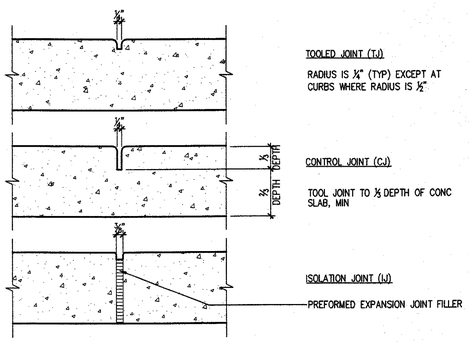

9 CONC JOINTS

3"=1'-0" DA102-09

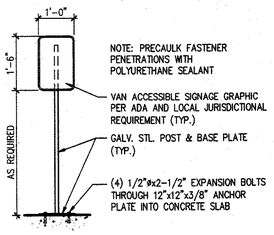

13 ACCESSIBLE PARKING SIGN

1/2"=1'-0" DA102-13

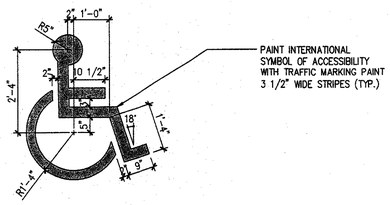

14 ACCESSIBLITY SYMBOL

1/2"=1'-0" DA102-14

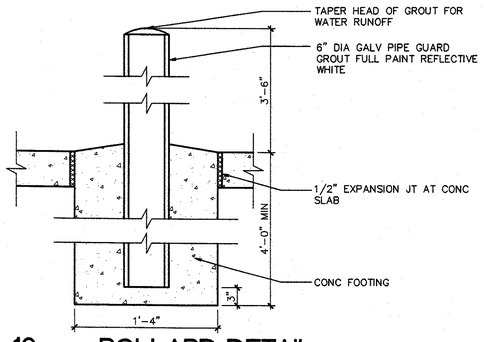

16 BOLLARD DETAIL

1 1/2"=1'-0" DA102-16

architecture company
sienna
411 sw sixth
portland, oregon
97204.1602
503.227.5616 v
503.227.3590 f

REGISTERED ARCHITECT
LEE R. WINN
PORTLAND, OR
STATE OF OREGON

RIVERS CONDOS

156 FRONT AVENUE
SALEM, OREGON
RIVERFRONT PARK LLC
429 COURT ST. NE
SALEM, OREGON 97301

project no:25094

CD/PERMIT SET	09.26.07
BUDGET SET	02.20.07
DESIGN DEVELOPMENT	10.10.06
DESIGN REVIEW	03.15.06
PRE-APP SET	03.09.06

© 2007 sienna architecture company
THESE DRAWINGS ARE THE PROPERTY OF SIENNA ARCHITECTURE COMPANY AND ARE NOT TO BE REPRODUCED IN ANY MANNER, EXCEPT WITH THE PRIOR WRITTEN PERMISSION OF SIENNA.

Drawn By Checked By Date

Sheet Title
SITE DETAILS

Salem Fire Dept

Sheet Scale
AS SHOWN

Sheet No.
A102

City of Salem Bldg. & Safety Div.

P:\2005\25094\Dwgs\ACAD\CURRENT\SHEET SET\25094-A102.dwg, 9/27/2007 8:49:41 AM, pdf, DWG to PDF.pc5, 1:1

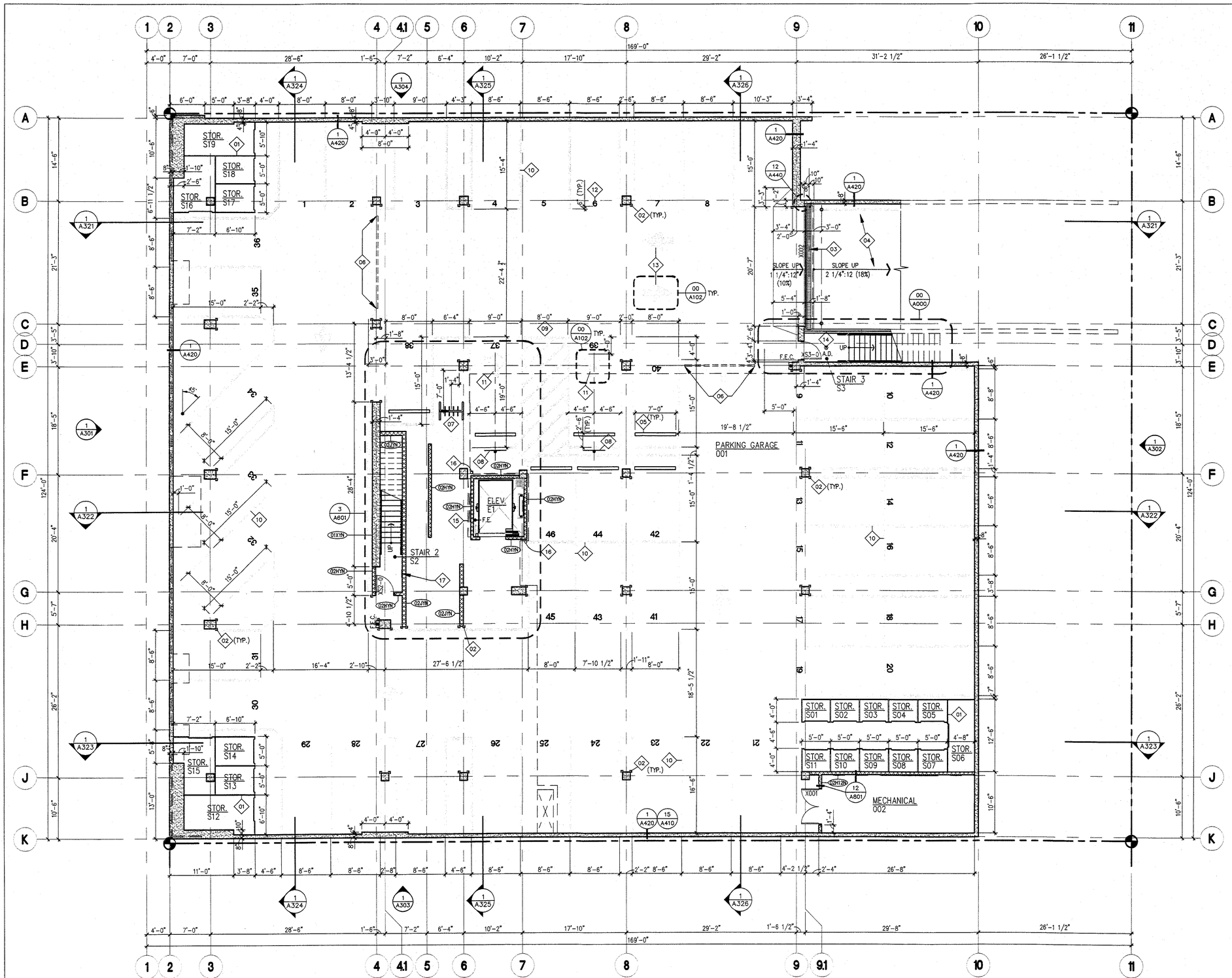

WALL LEGEND

- BV-1 (BRICK VENEER)
- CMU-1 (CONCRETE MASONRY UNITS)
- REINFORCED CONCRETE WALL

KEYNOTES

01. MODULAR STORAGE UNIT ASSEMBLY WITH COIL-UP DOOR. LOCATE TOP OF PANELS AT 6" BELOW BOTTOM OF FLOOR SLAB ABOVE.
02. 48" TALL STEEL ANGLE CORNER GUARD (TYP.).
03. TRENCH DRAIN. (COORD. WITH PLUMBING & CIVIL.)
04. 6" REINF. CONC. RAMP SLAB WITH EMBEDDED ICE MELT SYSTEM. (COORD. WITH ELECTRICAL & CIVIL.)
05. CONCRETE WHEELSTOP ANCHORED TO FLOOR SLAB (TYP.).
06. VEHICLE HEIGHT LIMIT SIGN AND WARNING BAR ABOVE. SIGN TYPE 04.
07. BICYCLE RACK ANCHORED TO FLOOR SLAB. (RACK CAPACITY 5 BICYCLES.)
08. POST MOUNTED VAN ACCESSIBLE PARKING STALL SIGN. SIGN TYPE 03.
09. VAN ACCESSIBLE PARKING STALL ACCESS AISLE WITH 4" WIDE DIAGONAL PAINT STRIPES @ 24" O.C.
10. 4" WIDE PAINTED PARKING STALL STRIPE (TYP.).
11. INTERNATIONAL SYMBOL OF ACCESIBILITY PAINTED ON PAVEMENT.
12. 12" TALL PARKING STALL NUMERAL PAINTED ON PAVEMENT (TYP.).
13. VEHICLE DIRECTIONAL ARROW PAINTED ON PAVEMENT (TYP.).
14. AREA DRAIN. (COORD. WITH CIVIL.)
15. MECHANICAL/ELECTRICAL CHASE ABOVE.
16. DOWNSPOUT PENETRATES THROUGH FLOOR SLAB ABOVE. (COORD. WITH PLUMBING.)
17. SIGN TYPE 06

EMERGENCY EXIT ILLUMINATION IS REQUIRED
At the interior and exterior throughout the egress path, and at exterior exit landings.

ILLUMINATED EXIT SIGNS REQUIRED

FE = FIRE EXTINGUISHER 24A10BC RATED

1 LEVEL 0: PARKING GARAGE FLOOR PLAN

1/8"=1'

0 4' 8' 12' 16' 20'

architecture company
sienna
411 sw sixth
portland, oregon
97204.1602
503.227.5616 v
503.227.3590 f

REGISTERED ARCHITECT LEE R. WINN PORTLAND, OR STATE OF OREGON

RIVERS CONDOS

156 FRONT AVENUE
SALEM, OREGON
RIVERFRONT PARK LLC
429 COURT ST. NE
SALEM, OREGON 97301

project no:25094

CD/PERMIT SET	09.26.07
BUDGET SET	02.20.07
DESIGN DEVELOPMENT	10.10.06
DESIGN REVIEW	08.15.06
PRE-APP SET	03.09.06

© 2007 sienna architecture company
THESE DRAWINGS ARE THE PROPERTY OF SIENNA ARCHITECTURE COMPANY AND ARE NOT TO BE REPRODUCED IN ANY MANNER, EXCEPT WITH THE PRIOR WRITTEN PERMISSION OF SIENNA.

Drawn By Checked By Date

Sheet Title
LEVEL 0:
PARKING GARAGE
FLOOR PLAN

Salem Fire Dept

Sheet Scale
AS SHOWN

Sheet No.
A200

City of Salem Bldg. & Safety Div.

P:\2005\25094\Dwgs\ACAD\CURRENT\SHEET SET\25094-A200.dwg, 9/26/2007 5:03:40 PM, pdk, DWG to PDF.pc3, 1:1

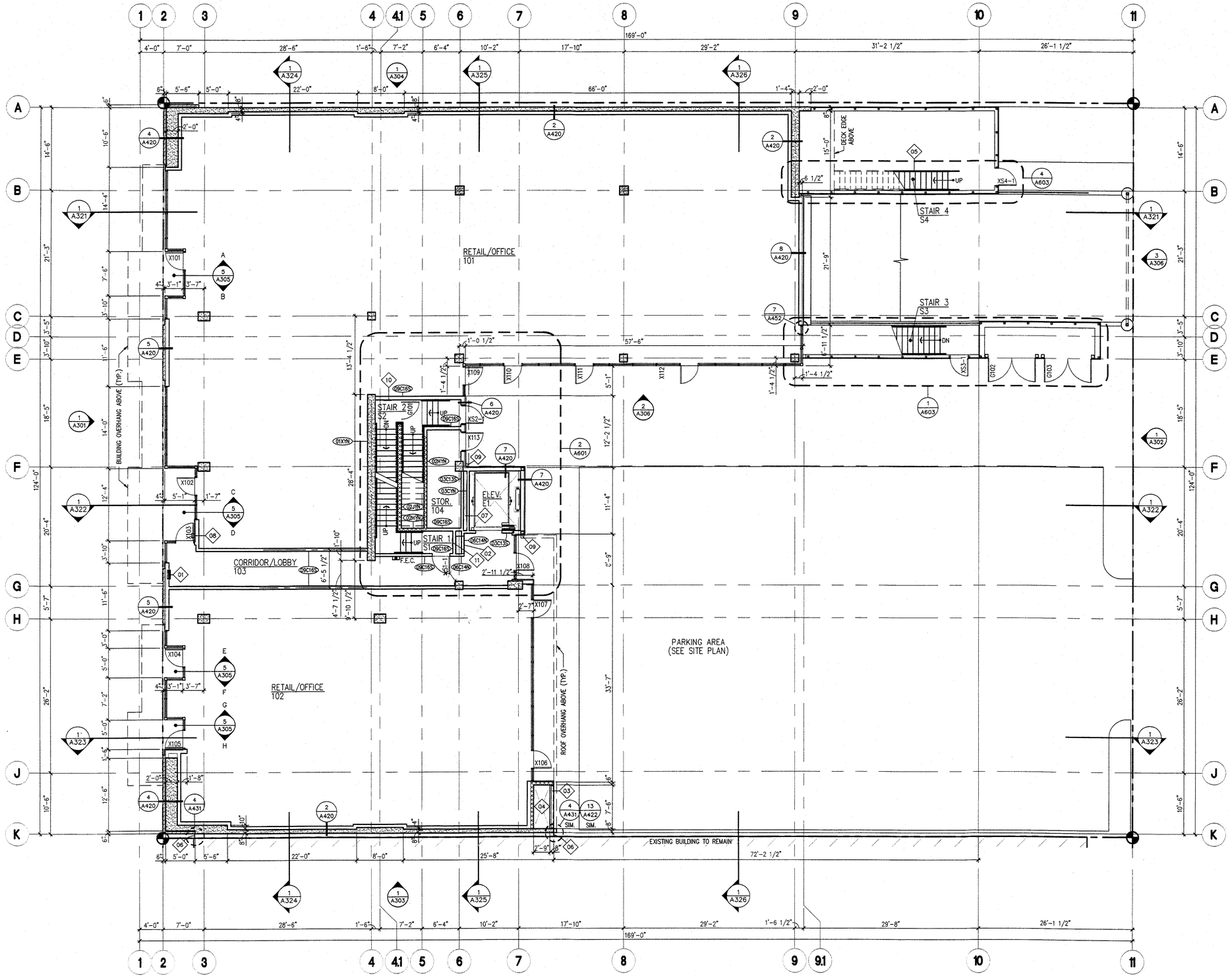

WALL LEGEND

- BV-1 (BRICK VENEER)
- CMU-1 (CONCRETE MASONRY UNITS)
- REINFORCED CONCRETE WALL

KEYNOTES

01. FIRE ALARM ANNUNCIATOR PANEL. (COORD. WITH ELECTRICAL & FIRE MARSHALL.)
02. RECESSED MAIL BOX ASSEMBLY.
03. WALL LOUVER AT PARKING GARAGE EXHAUST FAN. (COORD. WITH MECHANICAL.)
04. OPENING THROUGH FLOOR SLAB FOR EXHAUST FAN.
05. CONCRETE & STEEL STAIR ASSEMBLY TO SECOND FLOOR.
06. SHEET METAL CLOSURE TO FACE OF ADJACENT BUILDING.
07. MECHANICAL, PLUMBING & ELECTRICAL CHASE.
08. LOCATE FIRE DEPARTMENT KEY BOX AT TOP OF WALL TIGHT TO SOFFIT AS DIRECTED BY FIRE MARSHALL.
09. 6"x6" SHEET METAL DOWNSPOUT. CONNECT TO DRAIN PIPE FOR PENETRATION THROUGH FLOOR SLAB. (COORD. WITH PLUMBING.)
10. SIGN TYPE 06.
11. SIGN TYPE 07.

EMERGENCY EXIT ILLUMINATION IS REQUIRED
At the interior and exterior throughout the egress path, and at exterior exit landings

ILLUMINATED EXIT SIGNS REQUIRED

FIRE EXTINGUISHER
FE = 4A10BC RATED

1 LEVEL 1: FLOOR PLAN

1/8"=1'

0 4' 8' 12' 16' 20'

architecture company
sienna
411 sw sixth
portland, oregon
97204.1602
503.227.5616 v
503.227.3590 f

REGISTERED ARCHITECT
LEE R. WINN
PORTLAND, OR
STATE OF OREGON

RIVERS CONDOS

156 FRONT AVENUE
SALEM, OREGON
RIVERFRONT PARK LLC
429 COURT ST. NE
SALEM, OREGON 97301
project no:25094

CD/PERMIT SET	09.26.07
BUDGET SET	02.20.07
DESIGN DEVELOPMENT	10.10.06
DESIGN REVIEW	03.15.06
PRE-APP SET	03.09.06

© 2007 sienna architecture company
THESE DRAWINGS ARE THE PROPERTY OF SIENNA ARCHITECTURE COMPANY AND ARE NOT TO BE REPRODUCED IN ANY MANNER, EXCEPT WITH THE PRIOR WRITTEN PERMISSION OF SIENNA.

Drawn By Checked By Date

Sheet Title
LEVEL 1:
FLOOR PLAN

Salem Fire Dept.

Sheet Scale
AS SHOWN

Sheet No.
A201

City of Salem Bldg. & Safety Div.

P:\2005\25094\Dwgs\ACAD\CURRENT\SHEET SET\25094-A201.dwg, 9/26/2007 5:03:37 PM, pdk, DWG to PDF.pc3, 1:1

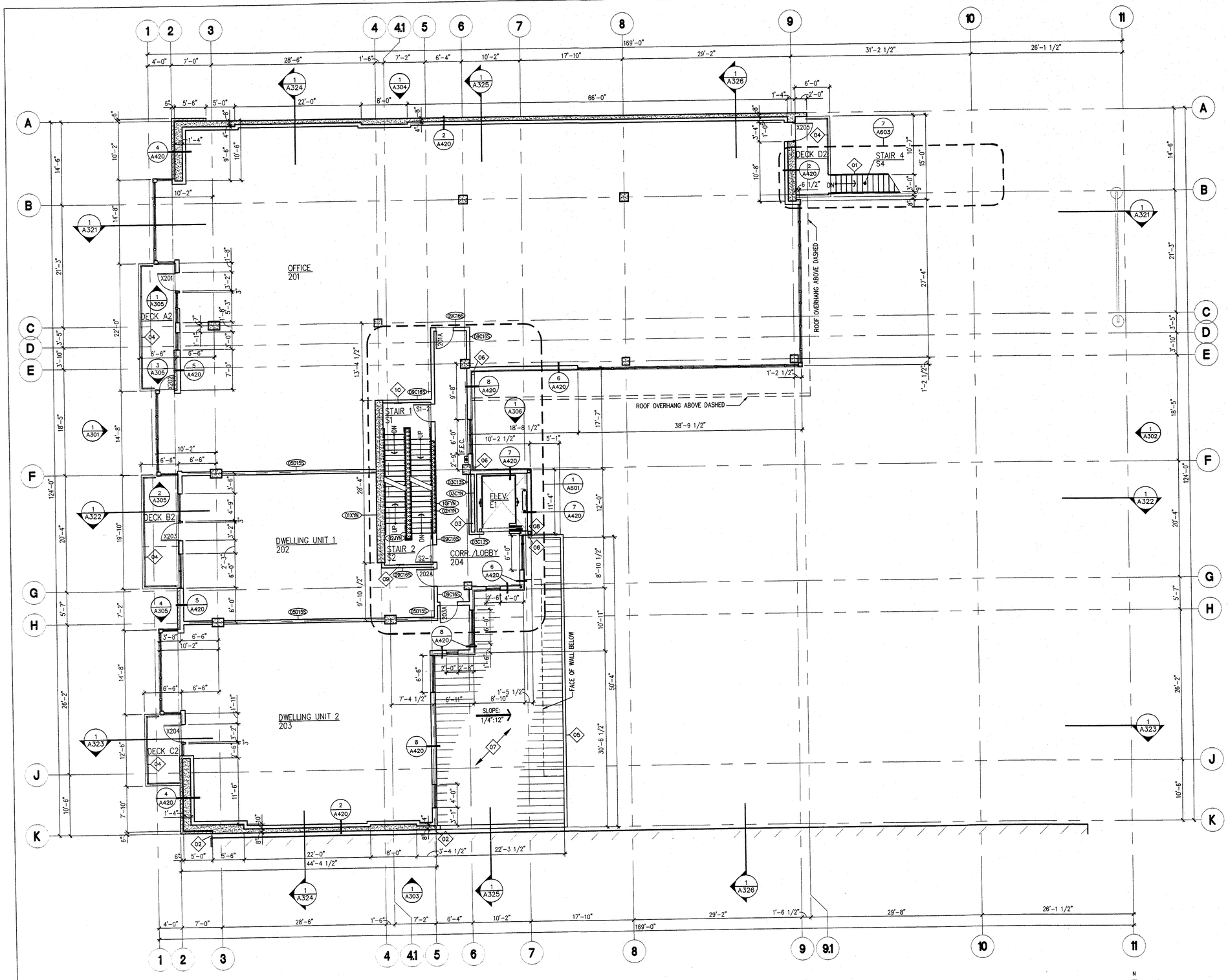

1 LEVEL 2: FLOOR PLAN
1/8"=1'

WALL LEGEND

- BV-1 (BRICK VENEER)
- CMU-1 (CONCRETE MASONRY UNITS)
- REINFORCED CONCRETE WALL

KEYNOTES

01 CONCRETE & STEEL STAIR ASSEMBLY TO LEVEL ONE.
02 SHEET METAL CLOSURE TO FACE OF ADJACENT BUILDING.
03 MECHANICAL, ELECTRICAL & PLUMBING CHASE.
04 GLASS GUARDRAIL ASSEMBLY. TOP OF RAILING AT 42" MINIMUM ABOVE FINISH FLOOR (TYP.).
05 CONTINUOUS SHEET METAL GUTTER & FASCIA ASSEMBLY.
06 6"x6" SHEET METAL DOWNSPOUT.
07 ROOF ASSEMBLY: ROOF-1.
08 GUTTER CONNECTS INTO SIDE OF SHEET METAL DOWNSPOUT.
09 SIGN TYPE 06.
10 SIGN TYPE 07.

ILLUMINATED EXIT SIGNS REQUIRED

EMERGENCY EXIT ILLUMINATION IS REQUIRED
At the interior and exterior throughout the egress path, and at exterior exit landings.

FIRE EXTINGUISHER
FE= 2A10BC RATED

architecture company
sienna
411 sw sixth
portland, oregon
97204.1602
503.227.5616 v
503.227.3590 f

REGISTERED ARCHITECT
LEE R. WINN
PORTLAND, OR
STATE OF OREGON

RIVERS CONDOS

156 FRONT AVENUE
SALEM, OREGON
RIVERFRONT PARK LLC
429 COURT ST. NE
SALEM, OREGON 97301
project no:25094

CD/PERMIT SET	09.26.07
BUDGET SET	02.20.07
DESIGN DEVELOPMENT	10.10.06
DESIGN REVIEW	03.15.06
PRE-APP SET	06.09.06

© 2007 sienna architecture company
THESE DRAWINGS ARE THE PROPERTY OF SIENNA ARCHITECTURE COMPANY AND ARE NOT TO BE REPRODUCED IN ANY MANNER, EXCEPT WITH THE PRIOR WRITTEN PERMISSION OF SIENNA.

Drawn By Checked By Date

Sheet Title
LEVEL 2:
FLOOR PLAN

Salem Fire Dept

Sheet Scale
AS SHOWN

Sheet No.
A202

City of Salem
Bldg. & Safety Div.

J:\25094-A202.dwg, 9/26/2007 5:05:24 PM, pdk, DWG to PDF.pc3, 1:1

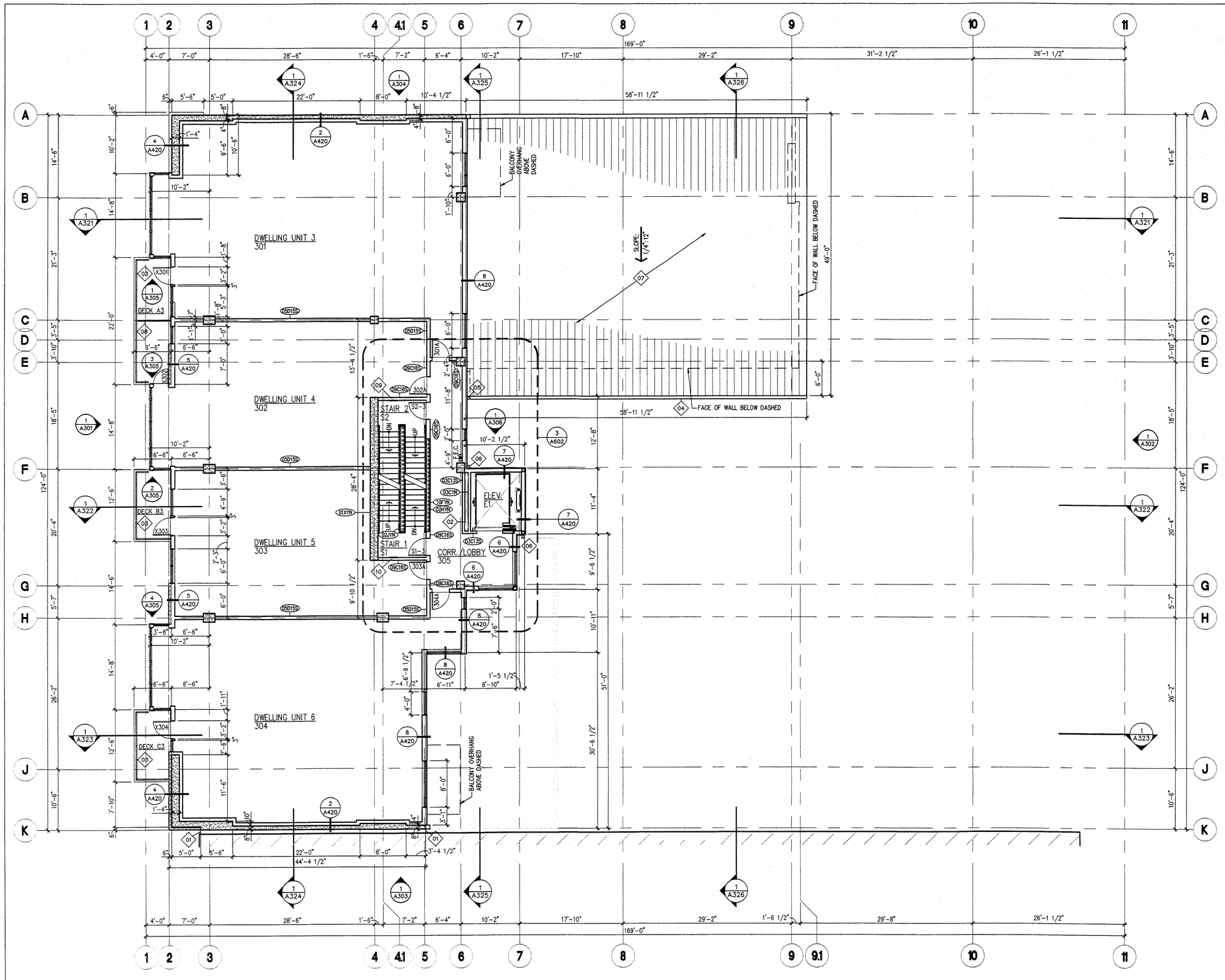

1 LEVEL 3: FLOOR PLAN

1/8"=1'

WALL LEGEND

- BV-1 (BRICK VENEER)
- CMU-1 (CONCRETE MASONRY UNITS)
- REINFORCED CONCRETE WALL

KEYNOTES

01 SHEET METAL CLOSURE TO FACE OF ADJACENT BUILDING.
02 MECHANICAL, ELECTRICAL & PLUMBING CHASE.
03 GLASS GUARDRAIL ASSEMBLY. TOP OF RAILING AT 42" MINIMUM ABOVE FINISH FLOOR (TYP.).
04 CONTINUOUS SHEET METAL GUTTER & FASCIA ASSEMBLY.
05 LEADER CONNECTS TO SHEET METAL DOWNSPOUT BELOW.
06 6"x6" SHEET METAL DOWNSPOUT.
07 ROOF ASSEMBLY: ROOF-1.
08 DECK DIVIDER PANEL WITH GLASS TYPE GL-6.
09 SIGN TYPE 06.
10 SIGN TYPE 07.

EMERGENCY EXIT ILLUMINATION IS REQUIRED
At the interior and exterior throughout the egress path, and at exterior exit landings.

ILLUMINATED EXIT SIGNS REQUIRED

FE FIRE EXTINGUISHER 2A10BC RATED

architecture company
sienna
411 sw sixth
portland, oregon
97204.1602
503.227.5616 v
503.227.3590 f

REGISTERED ARCHITECT
LEE R. WINN
PORTLAND, OR
STATE OF OREGON

RIVERS CONDOS

156 FRONT AVENUE
SALEM, OREGON
RIVERFRONT PARK LLC
429 COURT ST. NE
SALEM, OREGON 97301
project no:25094

CD/PERMIT SET	09.26.07
BUDGET SET	02.20.07
DESIGN DEVELOPMENT	10.10.06
DESIGN REVIEW	06.15.06
PRE-APP SET	03.09.06

© 2007 sienna architecture company
THESE DRAWINGS ARE THE PROPERTY OF SIENNA ARCHITECTURE COMPANY AND ARE NOT TO BE REPRODUCED IN ANY MANNER, EXCEPT WITH THE PRIOR WRITTEN PERMISSION OF SIENNA.

Drawn By Checked By Date

Sheet Title
LEVEL 3:
FLOOR PLAN

Salem Fire Dept

Sheet Scale
AS SHOWN

Sheet No.
A203

City of Salem Bldg. & Safety Div.

P:\2025\25-094\Dwgs\ARCHITECT\CURRENT SET\25-094-A203.dwg, 9/26/2007 1:03:17 PM, pdk, DWG to PDF.pc3, 1:1

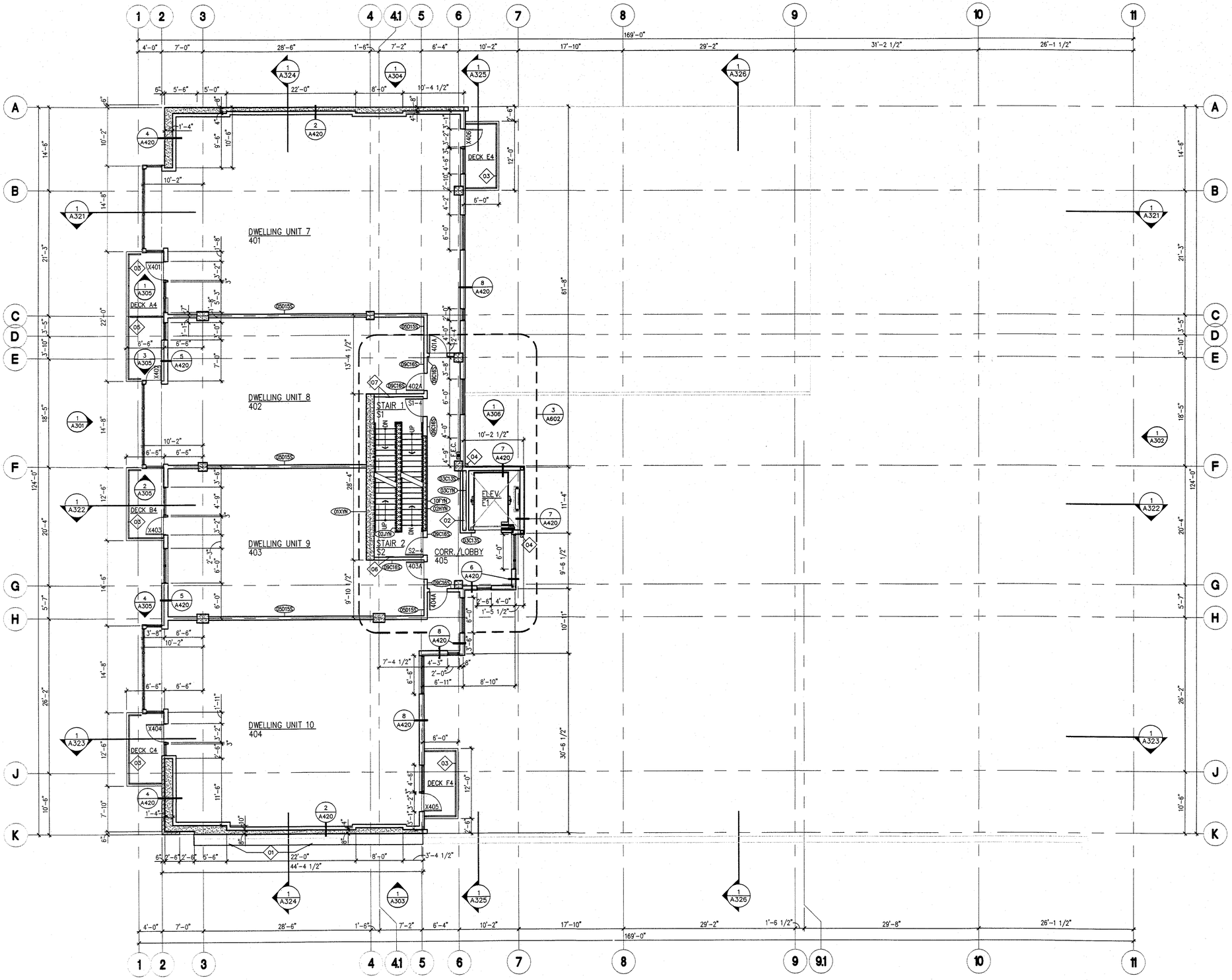

1 LEVEL 4: FLOOR PLAN

1/8"=1'

0 4' 8' 12' 16' 20'

WALL LEGEND

- BV-1 (BRICK VENEER)
- CMU-1 (CONCRETE MASONRY UNITS)
- REINFORCED CONCRETE WALL

KEYNOTES

01. SHEET METAL CLOSURE OVER PARAPET OF ADJACENT BUILDING.
02. MECHANICAL, ELECTRICAL & PLUMBING CHASE.
03. GLASS GUARDRAIL ASSEMBLY. TOP OF RAILING AT 42" MINIMUM ABOVE FINISH FLOOR (TYP.).
04. 6"x6" SHEET METAL DOWNSPOUT.
05. DECK DIVIDER PANEL WITH GLASS TYPE GL-6.
06. SIGN TYPE 06.
07. SIGN TYPE 07.

EMERGENCY EXIT ILLUMINATION IS REQUIRED
At the interior and exterior throughout the egress path, and at exterior exit landings.

ILLUMINATED EXIT SIGNS REQUIRED

FE = FIRE EXTINGUISHER 2A/10/BC RATED

architecture company
sienna
411 sw sixth
portland, oregon
97204.1602
503.227.5616 v
503.227.3590 f

REGISTERED ARCHITECT
LEE R. WINN
PORTLAND, OR
STATE OF OREGON

RIVERS CONDOS

156 FRONT AVENUE
SALEM, OREGON
RIVERFRONT PARK LLC
429 COURT ST. NE
SALEM, OREGON 97301

project no:25094

CD/PERMIT SET	09.26.07
BUDGET SET	02.20.07
DESIGN DEVELOPMENT	10.10.06
DESIGN REVIEW	08.15.06
PRE-APP SET	03.09.06

© 2007 sienna architecture company
THESE DRAWINGS ARE THE PROPERTY OF SIENNA ARCHITECTURE COMPANY AND ARE NOT TO BE REPRODUCED IN ANY MANNER, EXCEPT WITH THE PRIOR WRITTEN PERMISSION OF SIENNA.

Drawn By Checked By Date

Sheet Title
LEVEL 4:
FLOOR PLAN

Salem Fire Dept.

Sheet Scale
AS SHOWN

Sheet No.
A204

City of Salem
Bldg. & Safety Div.

P:\2005\25094\Dwgs\ACAD\CURRENT\25094-A204.dwg, 9/26/2007 1:03:09 PM, pdf, DWG to PDF.pc3, 1:1

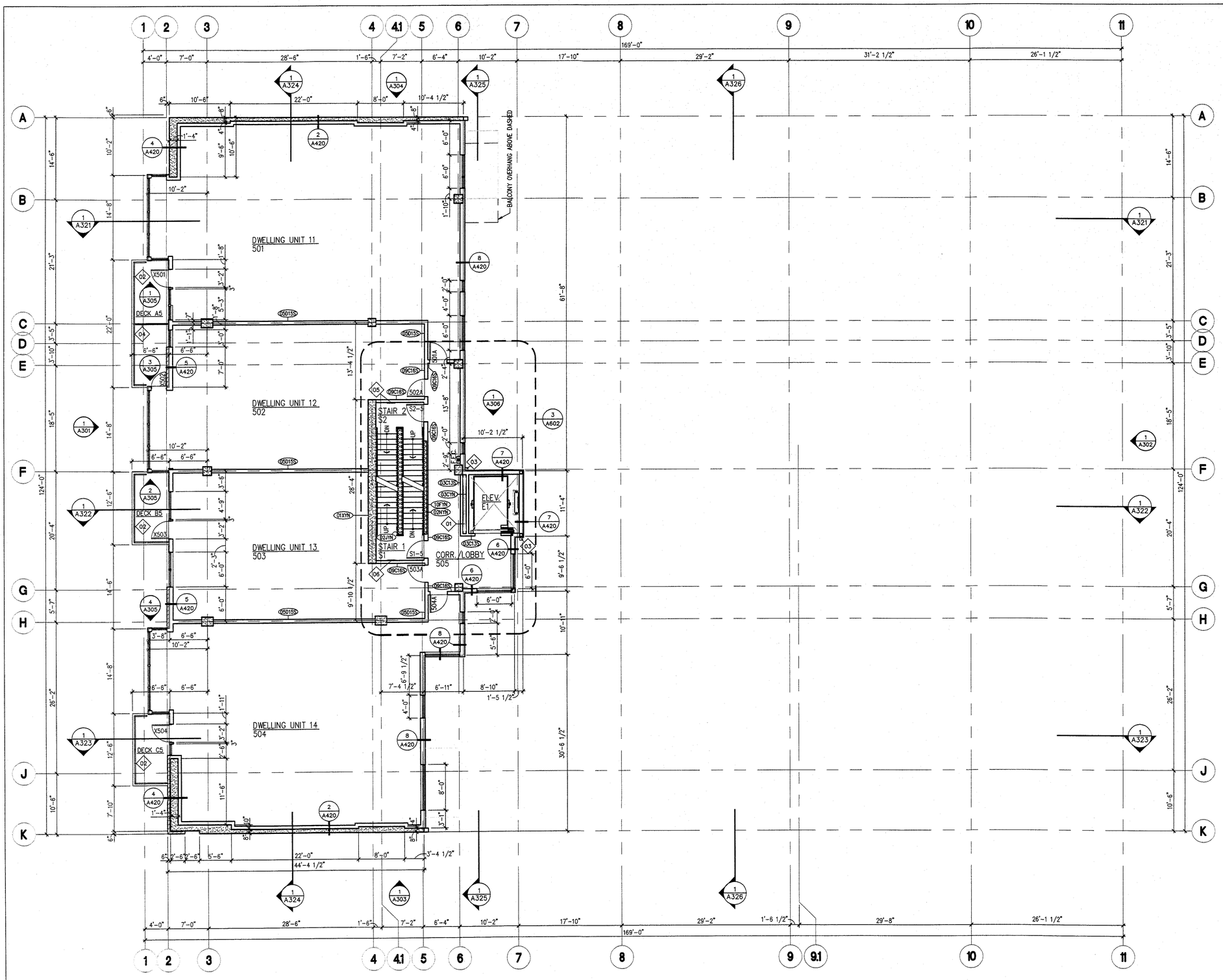

1 LEVEL 5: FLOOR PLAN
1/8"=1'

WALL LEGEND

- BV-1 (BRICK VENEER)
- CMU-1 (CONCRETE MASONRY UNITS)
- REINFORCED CONCRETE WALL

KEYNOTES

01. MECHANICAL, ELECTRICAL & PLUMBING CHASE.
02. GLASS GUARDRAIL ASSEMBLY. TOP OF RAILING AT 42" MINIMUM ABOVE FINISH FLOOR (TYP.).
03. 6"x6" SHEET METAL DOWNSPOUT.
04. DECK DIVIDER PANEL WITH GLASS TYPE GL-6.
05. SIGN TYPE 06.
06. SIGN TYPE 07..

EMERGENCY EXIT ILLUMINATION IS REQUIRED
At the interior and exterior throughout the egress path, and at exterior exit landings.

ILLUMINATED EXIT SIGNS REQUIRED

FIRE EXTINGUISHER
FE 2A10BC RATED

architecture company
sienna
411 sw sixth
portland, oregon
97204.1602
503.227.5616 v
503.227.3590 f

REGISTERED ARCHITECT
LEE R. WINN
PORTLAND, OR
STATE OF OREGON

RIVERS CONDOS

156 FRONT AVENUE
SALEM, OREGON
RIVERFRONT PARK LLC
429 COURT ST. NE
SALEM, OREGON 97301
project no:25094

CD/PERMIT SET	09.26.07
BUDGET SET	02.20.07
DESIGN DEVELOPMENT	10.10.06
DESIGN REVIEW	03.15.06
PRE-APP SET	03.09.06

© 2007 sienna architecture company
THESE DRAWINGS ARE THE PROPERTY OF SIENNA ARCHITECTURE COMPANY AND ARE NOT TO BE REPRODUCED IN ANY MANNER, EXCEPT WITH THE PRIOR WRITTEN PERMISSION OF SIENNA.

Drawn By Checked By Date

Sheet Title
LEVEL 5:
FLOOR PLAN

Sheet Scale
AS SHOWN

Salem Fire Dept.

Sheet No.
A205

City of Salem
Bldg. & Safety Div.

P:\2005\25094\Dwgs\ACAD\CURRENT\SHEET SET\25094-A205.dwg, 9/26/2007 5:02:56 PM, pdf, DWG to PDF.pc3, 1:1

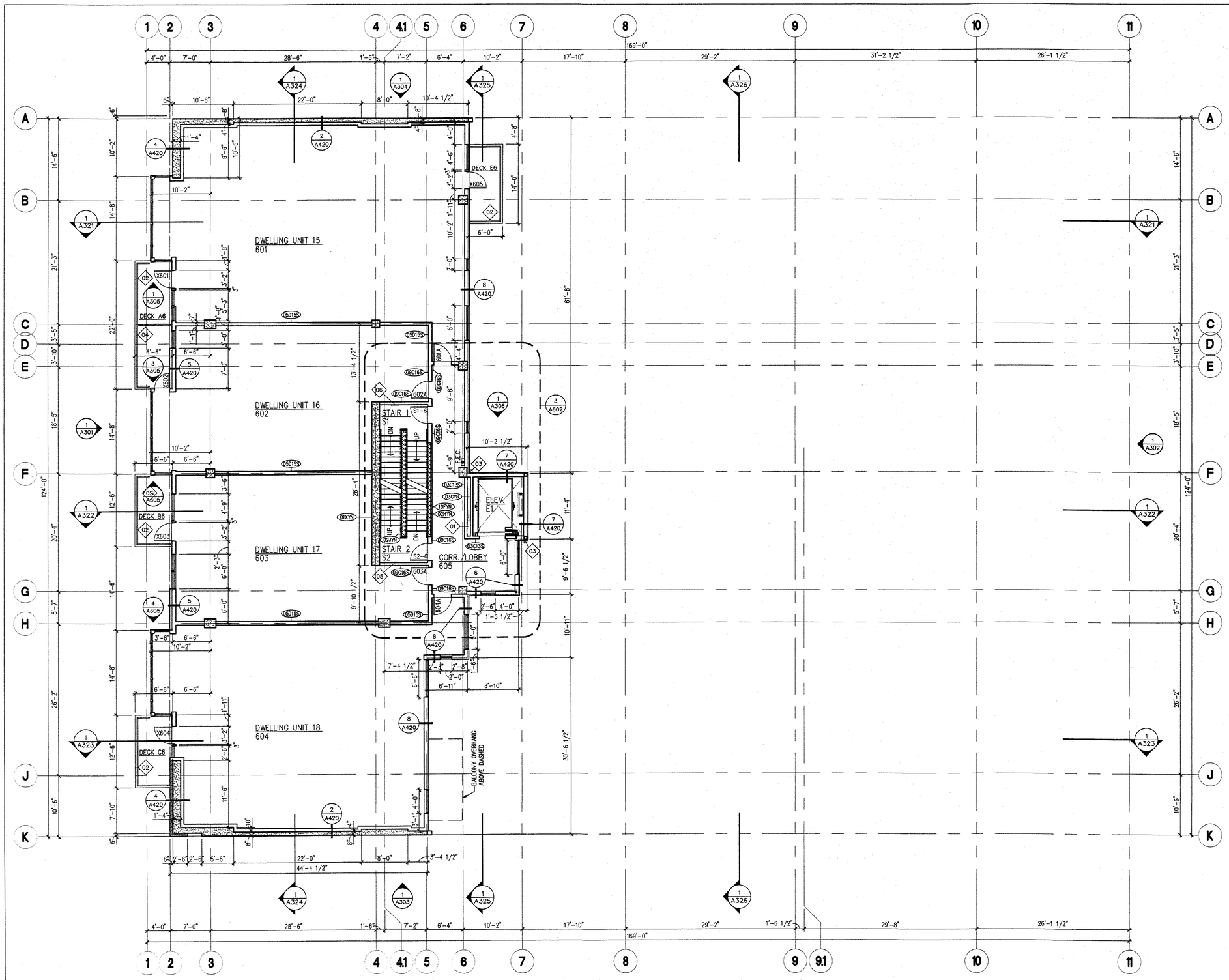

1 LEVEL 6: FLOOR PLAN
1/8"=1'

WALL LEGEND

- BV-1 (BRICK VENEER)
- CMU-1 (CONCRETE MASONRY UNITS)
- REINFORCED CONCRETE WALL

KEYNOTES

- 01 MECHANICAL, ELECTRICAL & PLUMBING CHASE.
- 02 GLASS GUARDRAIL ASSEMBLY. TOP OF RAILING AT 42" MINIMUM ABOVE FINISH FLOOR (TYP.).
- 03 6"x6" SHEET METAL DOWNSPOUT.
- 04 DECK DIVIDER PANEL WITH GLASS TYPE GL-6.
- 05 SIGN TYPE 06.
- 06 SIGN TYPE 07.

EMERGENCY EXIT ILLUMINATION IS REQUIRED
At the interior and exterior throughout the egress path, and at exterior exit landings.

ILLUMINATED EXIT SIGNS REQUIRED

FIRE EXTINGUISHER
FE 4A 10BC RATED

architecture company
sienna
411 sw sixth
portland, oregon
97204.1602
503.227.5616 v
503.227.3590 f

REGISTERED ARCHITECT
LEE R. WINN
PORTLAND, OR
STATE OF OREGON

RIVERS CONDOS

156 FRONT AVENUE
SALEM, OREGON
RIVERFRONT PARK LLC
429 COURT ST. NE
SALEM, OREGON 97301
project no:25094

CD/PERMIT SET	09.26.07
BUDGET SET	02.20.07
DESIGN DEVELOPMENT	10.10.06
DESIGN REVIEW	06.15.06
PRE-APP SET	03.09.06

© 2007 sienna architecture company
THESE DRAWINGS ARE THE PROPERTY OF SIENNA ARCHITECTURE COMPANY AND ARE NOT TO BE REPRODUCED IN ANY MANNER, EXCEPT WITH THE PRIOR WRITTEN PERMISSION OF SIENNA.

Drawn By Checked By Date

Sheet Title
LEVEL 6:
FLOOR PLAN

Salem Fire Dept.

Sheet Scale
AS SHOWN

Sheet No.
A206

City of Salem
Bldg. & Safety Div.

P:\2005\25094\Dwgs\ACAD\CURRENT\SHEET\25094-A206.dwg, 9/26/2007 1:02:49 PM, pdk, DWG to PDF.pc3, 1:1

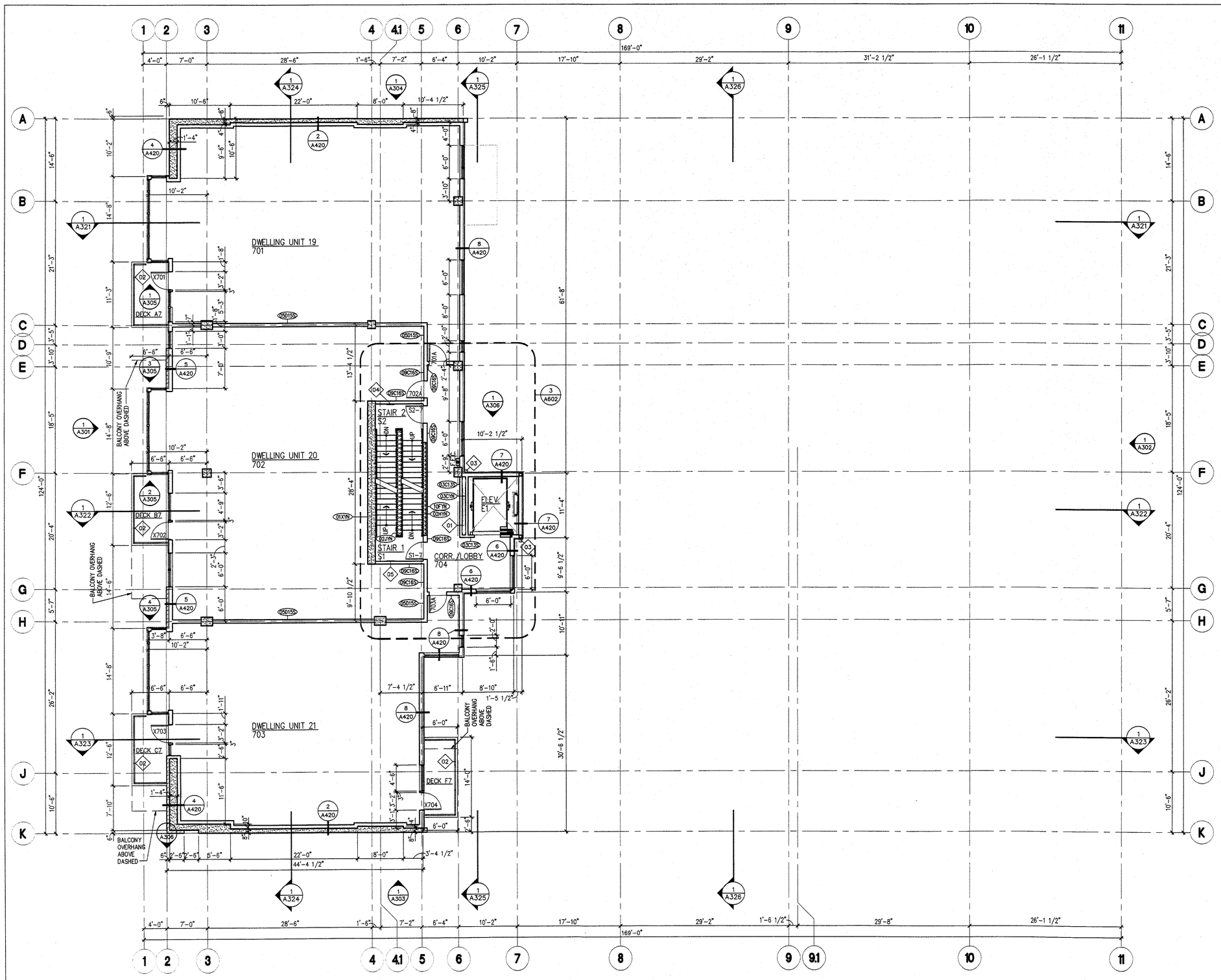

1 LEVEL 7: FLOOR PLAN

1/8"=1'

WALL LEGEND

- BV-1 (BRICK VENEER)
- CMU-1 (CONCRETE MASONRY UNITS)
- REINFORCED CONCRETE WALL

KEYNOTES

01. MECHANICAL, ELECTRICAL & PLUMBING CHASE.
02. GLASS GUARDRAIL ASSEMBLY. TOP OF RAILING AT 42" MINIMUM ABOVE FINISH FLOOR (TYP.).
03. 8"x6" SHEET METAL DOWNSPOUT.
04. SIGN TYPE 06.
05. SIGN TYPE 07.

EMERGENCY EXIT ILLUMINATION IS REQUIRED
At the interior and exterior throughout the egress path, and at exterior exit landings.

ILLUMINATED EXIT SIGNS REQUIRED

FIRE EXTINGUISHER
2A10BC RATED

architecture company
sienna
411 sw sixth
portland, oregon
97204.1602
503.227.5616 v
503.227.3590 f

REGISTERED ARCHITECT
LEE R. WINN
PORTLAND, OR
STATE OF OREGON

RIVERS CONDOS

156 FRONT AVENUE
SALEM, OREGON
RIVERFRONT PARK LLC
429 COURT ST. NE
SALEM, OREGON 97301
project no:25094

CD/PERMIT SET	09.26.07
BUDGET SET	02.20.07
DESIGN DEVELOPMENT	10.10.06
DESIGN REVIEW	03.15.06
PRE-APP SET	03.09.06

© 2007 sienna architecture company
THESE DRAWINGS ARE THE PROPERTY OF SIENNA ARCHITECTURE COMPANY AND ARE NOT TO BE REPRODUCED IN ANY MANNER, EXCEPT WITH THE PRIOR WRITTEN PERMISSION OF SIENNA.

Drawn By Checked By Date

Sheet Title
LEVEL 7:
FLOOR PLAN

Salem Fire Dept

Sheet Scale
AS SHOWN

Sheet No.
A207

City of Salem
Bldg. & Safety Div.

P:\2005\25094\Dwgs\ACAD\CURRENT\SHEET SET\25094-A20.dwg, 9/26/2007 5:02:59 PM, pdk, DWG to PDF.pc3, 1:1

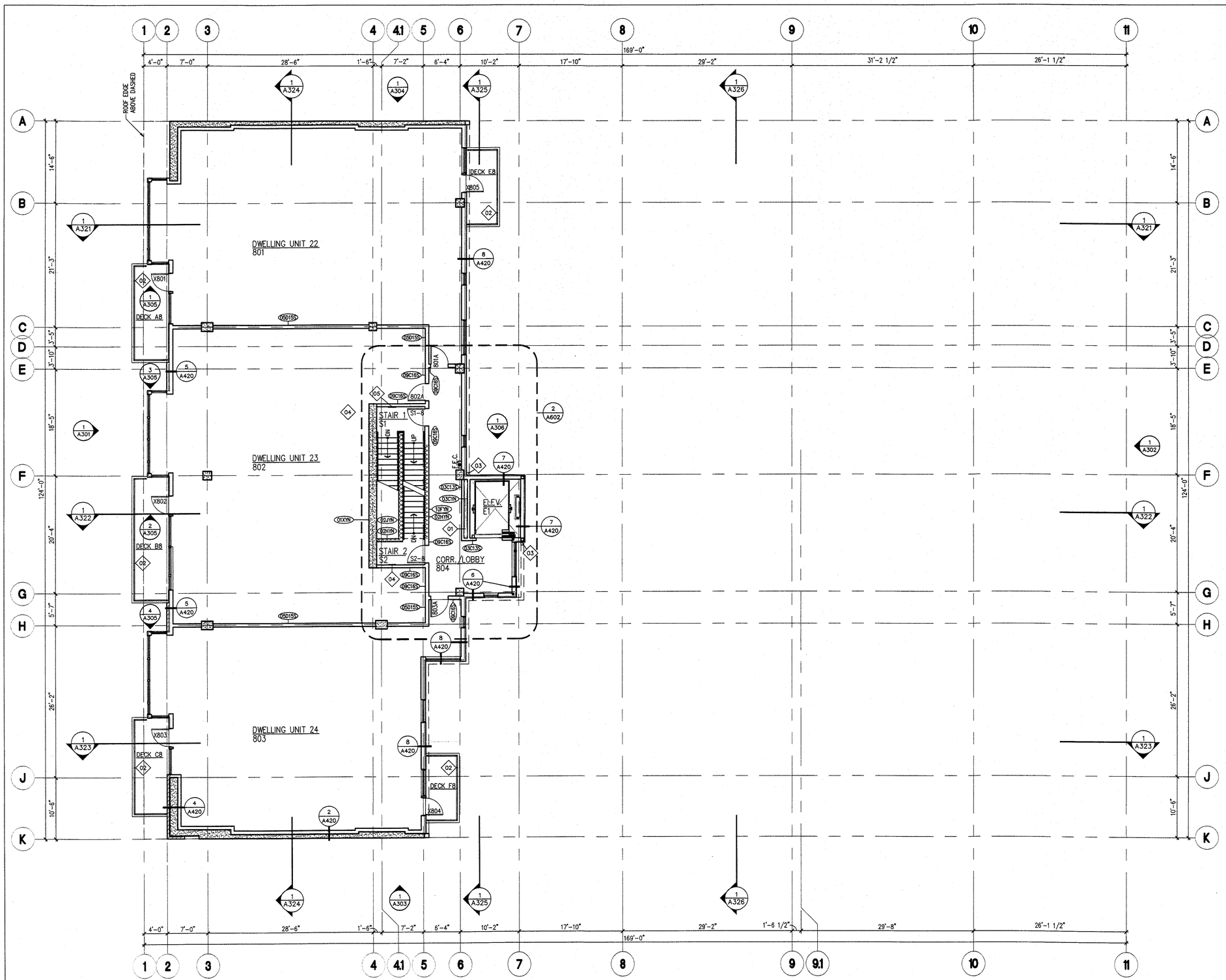

1 LEVEL 8: FLOOR PLAN
1/8"=1'

WALL LEGEND

- BV-1 (BRICK VENEER)
- CMU-1 (CONCRETE MASONRY UNITS)
- REINFORCED CONCRETE WALL

KEYNOTES

01 MECHANICAL, ELECTRICAL & PLUMBING CHASE.

02 GLASS GUARDRAIL ASSEMBLY. TOP OF RAILING AT 42" MINIMUM ABOVE FINISH FLOOR (TYP.).

03 8"x6" SHEET METAL DOWNSPOUT.

04 SIGN TYPE 06.

05 SIGN TYPE 07.

EMERGENCY EXIT ILLUMINATION IS REQUIRED
At the interior and exterior throughout the egress path, and at exterior exit landings.

ILLUMINATED EXIT SIGNS REQUIRED

FIRE EXTINGUISHER
3A10BC RATED

architecture company
sienna
411 sw sixth
portland, oregon
97204.1602
503.227.5616 v
503.227.3590 f

REGISTERED ARCHITECT
LEE R. WINN
PORTLAND, OR
STATE OF OREGON

RIVERS CONDOS

156 FRONT AVENUE
SALEM, OREGON
RIVERFRONT PARK LLC
429 COURT ST. NE
SALEM, OREGON 97301

project no:25094

CD/PERMIT SET	09.28.07
BUDGET SET	02.20.07
DESIGN DEVELOPMENT	10.10.06
DESIGN REVIEW	03.15.06
PRE-APP SET	03.09.06

© 2007 sienna architecture company
THESE DRAWINGS ARE THE PROPERTY OF SIENNA ARCHITECTURE COMPANY AND ARE NOT TO BE REPRODUCED IN ANY MANNER, EXCEPT WITH THE PRIOR WRITTEN PERMISSION OF SIENNA.

Drawn By Checked By Date

Sheet Title
LEVEL 8:
FLOOR PLAN

Salem Fire Dept.

Sheet Scale
AS SHOWN

Sheet No.
A208

City of Salem
Bldg. & Safety Div.

P:\2002\25094\Dwgs\ACAD\CURRENT\SHEET SET\25094-A208.dwg, 9/26/2007 5:02:33 PM, pdk, DWG to PDF.pc3, 1:1

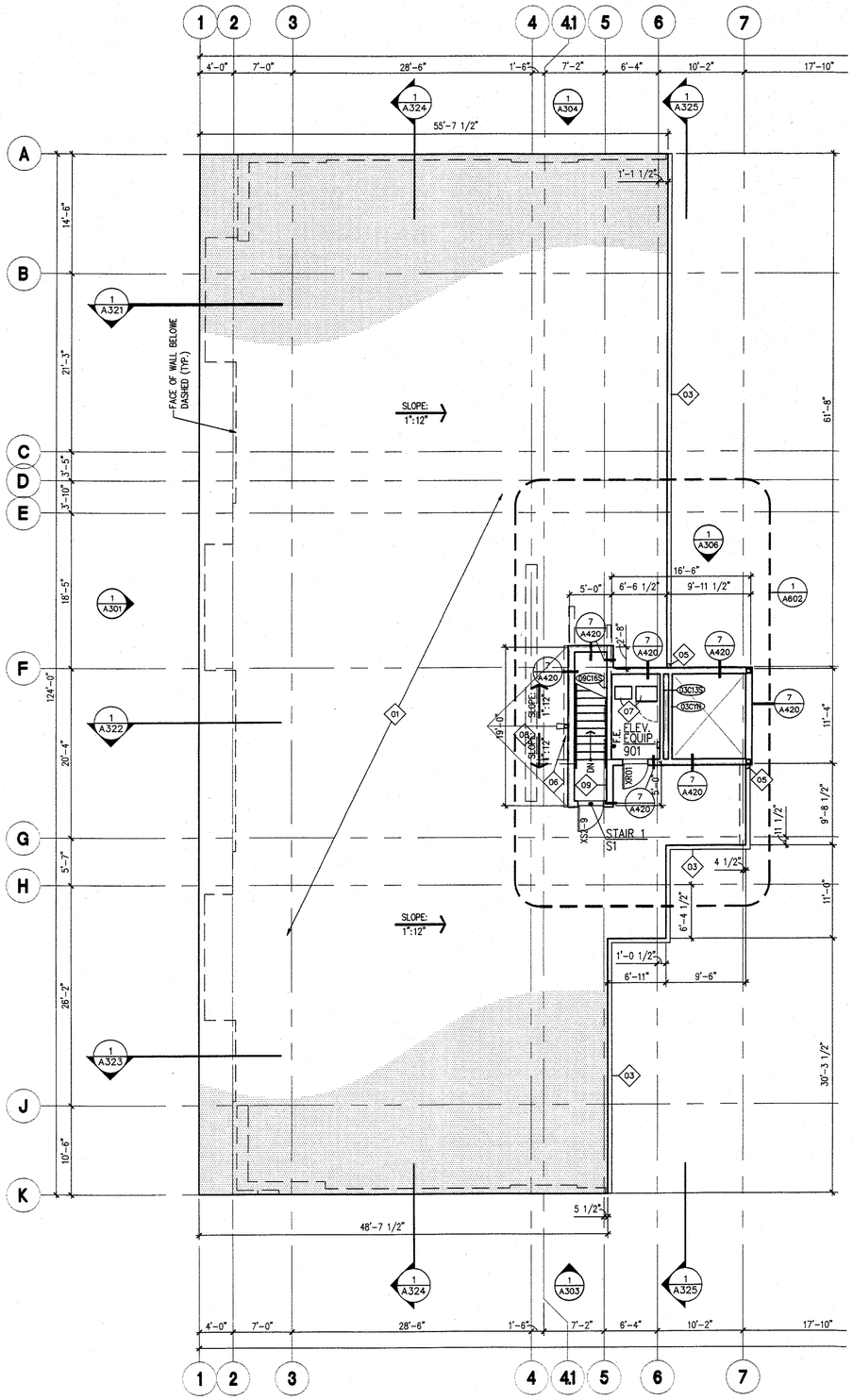

1 ROOF PLAN

1/8"=1'

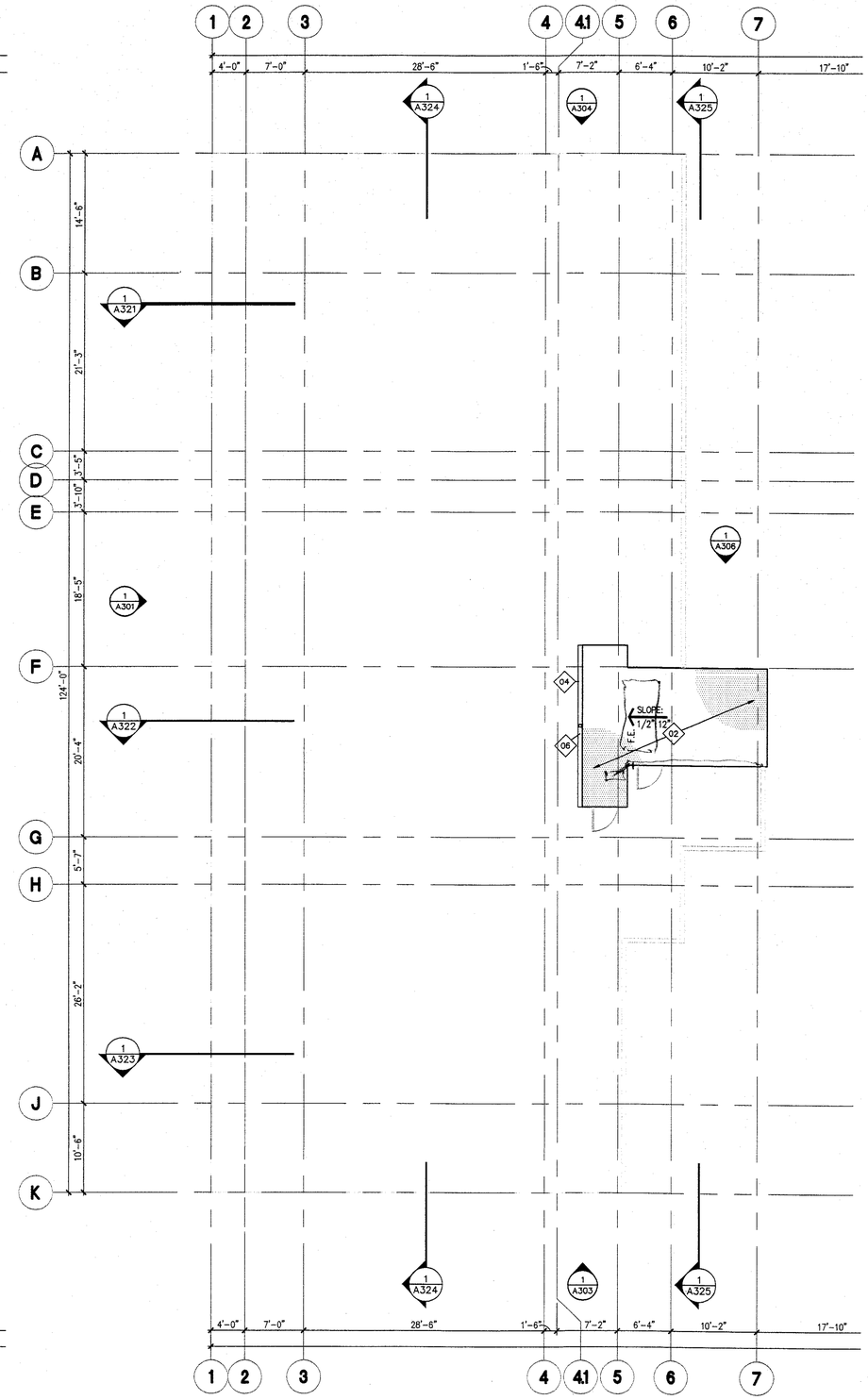

2 PENTHOUSE ROOF PLAN

1/8"=1'

WALL LEGEND

- BV-1 (BRICK VENEER)
- CMU-1 (CONCRETE MASONRY UNITS)
- REINFORCED CONCRETE WALL

KEYNOTES

01. ROOF ASSEMBLY; ROOF-2.
02. ROOF ASSEMBLY: ROOF-3.
03. CONTINUOUS SHEET METAL GUTTER & FASCIA ASSEMBLY.
04. CONTINUOUS SHEET METAL GUTTER.
05. LEADER CONNECTS TO 6"X6" SHEET METAL DOWNSPOUT BELOW.
06. 4"x4" SHEET METAL DOWNSPOUT WITH SPLASH BLOCK AT ROOF BELOW.
07. ELEVATOR CONTROL EQUIPMENT. (COORD. WITH ELEVATOR SUPPLIER & ELECTRICAL.)
08. TAPERED INSULATION CRICKET.
09. SIGN TYPE 07.

ROOF NOTES

A. WHEN NOT OTHERWISE INDICATED, PROVIDE INSTALLATION CONFORMING WITH STANDARD ROOFING DETAILS AS PUBLISHED IN THE LATEST EDITIONS OF THE NATIONAL ROOFING CONTRACTORS ASSOCIATION (NRCA), SHEET METAL AND AIR CONDITIONING CONTRACTORS' NATIONAL ASSOCIATION (SMACNA-- ARCHITECTURAL SHEET METAL MANUAL) AND MANUFACTURER'S WRITTEN INSTRUCTIONS. IN THE EVENT OF CONFLICTING INFORMATION, REQUEST CLARIFICATION FROM ARCHITECT.

B. VERIFY THAT ALL AREAS HAVE POSITIVE DRAINAGE (1/4" PER FOOT MINIMUM) PRIOR TO ROOFING INSTALLATION PONDING WILL NOT BE ACCEPTABLE. PROVIDE CRICKETS AS REQUIRED FOR POSITIVE DRAINAGE AROUND ALL ROOFTOP EQUIPMENT AND ROOF STRUCTURES, INCLUDING, BUT NOT LIMITED TO, ROOF ACCESS HATCHES, MECHANICAL UNITS, CURBS, ETC.

C. VERIFY LOCATIONS AND SIZES OF ALL ROOF OPENINGS AND PLATFORMS.

D. PROVIDE MINIMUM CLEARANCES PER NRCA (FIFTH EDITION) "TABLE 4--GUIDE FOR CLEARANCES BETWEEN PIPES/WALLS/CURBS".

architecture company
sienna
411 sw sixth
portland, oregon
97204.1602
503.227.5616 v
503.227.3590 f

REGISTERED ARCHITECT
LEE R. WINN
PORTLAND, OR
STATE OF OREGON

RIVERS CONDOS

156 FRONT AVENUE
SALEM, OREGON
RIVERFRONT PARK LLC
429 COURT ST. NE
SALEM, OREGON 97301

project no:25094

CD/PERMIT SET	09.26.07
BUDGET SET	02.20.07
DESIGN DEVELOPMENT	10.10.06
DESIGN REVIEW	03.15.06
PRE-APP SET	03.09.06

© 2007 sienna architecture company
THESE DRAWINGS ARE THE PROPERTY OF SIENNA ARCHITECTURE COMPANY AND ARE NOT TO BE REPRODUCED IN ANY MANNER, EXCEPT WITH THE PRIOR WRITTEN PERMISSION OF SIENNA.

Drawn By Checked By Date

Sheet Title
ROOF PLANS

Salem Fire Dept

Sheet Scale
AS SHOWN

Sheet No.
A209

City of Salem
Bldg. & Safety Div.

P:\2005\25094\Dwgs\ACAD\CURRENT\SHEET SET\25094-A209.dwg, 9/26/2007 5:02:26 PM, pdk, DWG To PDF.pc5, 1:1

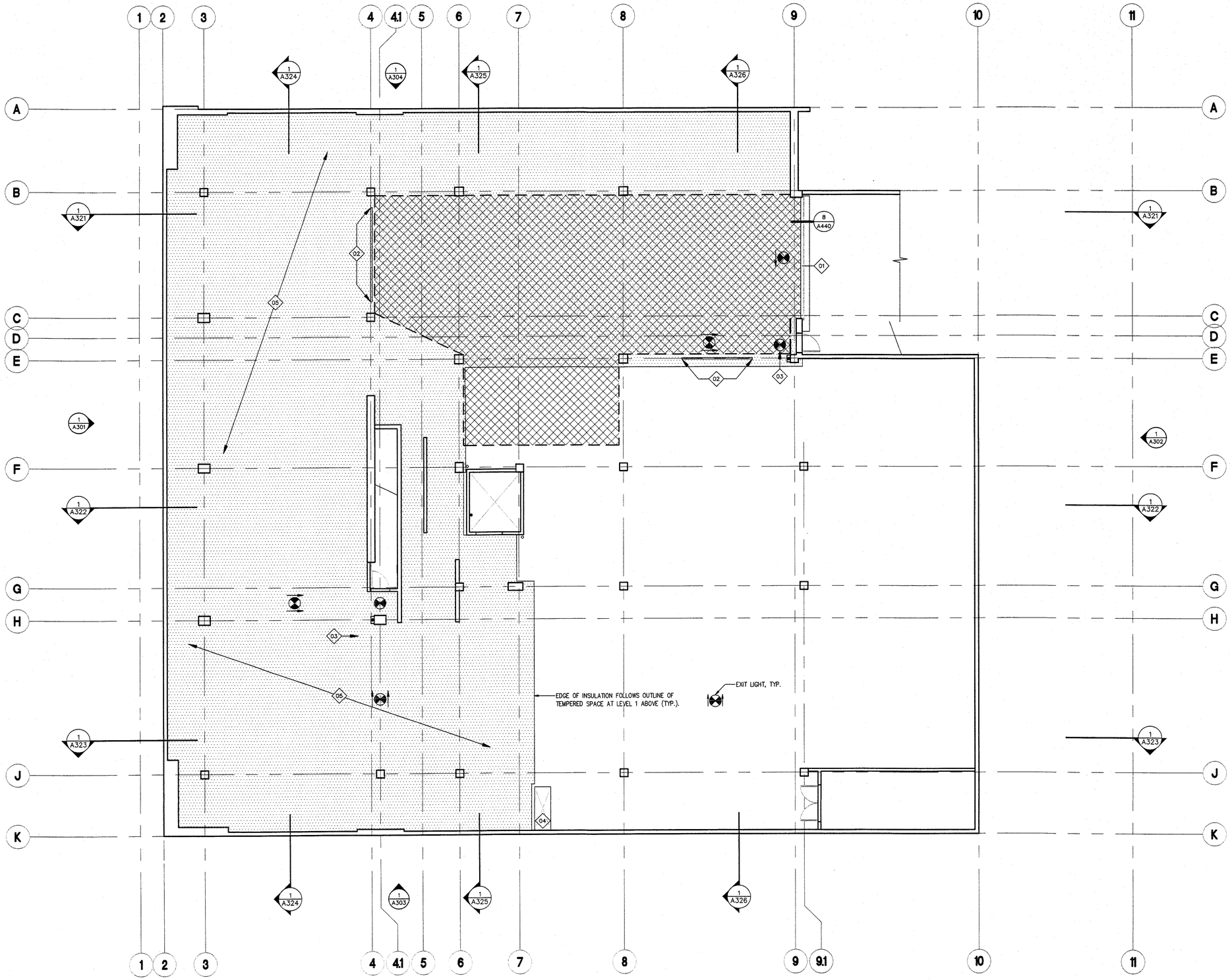

1 LEVEL 0: PARKING GARAGE REFLECTED CEILING PLAN

1/8"=1'

0 4' 8' 12' 16' 20'

GENERAL NOTES

A. CONTRACTOR TO VERIFY ALL DIMENSIONS AND CONDITIONS PRIOR TO CONSTRUCTION. NOTIFY ARCHITECT OF ANY DISCREPANCIES BEFORE START OF WORK.

B. UNLESS OTHERWISE NOTED, DIMENSIONS ARE TO FACE OF MASONRY & CONCRETE WALLS, FACE OF STUD, AND GRID CENTER LINES.

C. MAINTAIN MINUMUM 8'-2" CLEAR HEADROOM AT VAN ACCESSIBLE VEHICLE CIRCULATION AND PARKING STALLS (PER I.B.C. 1104.4.2 & ICC/ANSI A117.1). MAINTAIN MINIMUM 7'-0" CLEAR HEADROOM AT ALL OTHER VEHICLE CIRCULATION AND PARKING AREAS (PER I.B.C. 406.2.2).

D. COORDINATE LOCATIONS OF STEPS IN BOTTOM OF SLAB WITH STRUCTURAL DRAWINGS.

LEGEND

INSUL-GFBD R-11

8'-2" MIN. CLEAR HEADROOM AT VAN ACCESSIBLE PARKING & CIRCULATION

ILLUMINATED EXIT SIGN WITH DIRECTIONAL ARROWS

KEYNOTES

01 COILING GRILLE & HOUSING.

02 PENDANT MOUNT VEHICLE HEIGHT LIMIT SIGN AND WARNING BAR.

03 ILLUMINATED EXIT SIGN. (COORD. WITH ELECTRICAL.)

04 OPENING THROUGH FLOOR SLAB FOR EXHAUST FAN ABOVE. (COORD. WITH MECHANICAL & STRUCTURAL.)

05 FASTEN INSULATION TO BOTTOM OF CONCRETE FLOOR SLAB (TYP.).

EMERGENCY EXIT ILLUMINATION IS REQUIRED
At the interior and exterior throughout the egress path, and at exterior exit landings.

ILLUMINATED EXIT SIGNS REQUIRED

architecture company
sienna
411 sw sixth
portland, oregon
97204.1602
503.227.5616 v
503.227.3590 f

REGISTERED ARCHITECT
LEE R. WINN
PORTLAND, OR
STATE OF OREGON

RIVERS CONDOS

156 FRONT AVENUE
SALEM, OREGON
RIVERFRONT PARK LLC
429 COURT ST. NE
SALEM, OREGON 97301

project no:25094

CD/PERMIT SET	09.26.07
BUDGET SET	02.20.07
DESIGN DEVELOPMENT	10.10.06
DESIGN REVIEW	06.15.06
PRE-APP SET	03.09.06

© 2007 sienna architecture company
THESE DRAWINGS ARE THE PROPERTY OF SIENNA ARCHITECTURE COMPANY AND ARE NOT TO BE REPRODUCED IN ANY MANNER, EXCEPT WITH THE PRIOR WRITTEN PERMISSION OF SIENNA.

Drawn By Checked By Date

Sheet Title
LEVEL 0:
PARKING GARAGE
REFLECTED
CEILING PLAN

Sheet Scale
AS SHOWN

Salem Fire Dept

Sheet No.
A210

City of Salem
Bldg. & Safety Div.

P:\2005\25094\Dwgs\ACAD\CURRENT\SHEET SET\25094-A210.dwg, 9/26/2007 3:03:49 PM, pdf, DWG to PDF.pc3, 1:1

1 WEST ELEVATION

1/8"=1'-0"

0 4' 8' 12' 16' 20'

GENERAL NOTES

A. [NOTE TEXT]

B.

MATERIAL LEGEND

- AP-1 ALUMINUM PANEL
- BV-1 BRICK VENEER
- EC-1 ELASTOMERIC COATING ON CONCRETE
- FCP-1 FIBER CEMENT PANEL
- GG GLASS GUARDRAIL ASSEMBLY
- GL-AS NOTED, COLORED GLAZING
- MP-1 VERTICAL CORRUGATED METAL SIDING
- MP-2 HORIZONTAL BOX RIB METAL SIDING
- MP-3 HORIZONTAL METAL SIDING
- MR-1 STANDING SEAM METAL ROOF
- WCP-1 WOOD COMPOSITE PANEL (FIELD)
- WCP-2 WOOD COMPOSITE PAENL (ACCENT)
- WD-1 SPACED WOOD FENCING

PREMISES IDENTIFICATION. Approved numbers or addresses shall be placed on all new and existing premises in such a manner as to be plainly visible from the street or road fronting the property, said numbers shall contrast with their background.

architecture company
sienna
411 sw sixth
portland, oregon
97204.1602
503.227.5616 v
503.227.3590 f

REGISTERED ARCHITECT
LEE R. WINN
PORTLAND, OR
STATE OF OREGON

RIVERS CONDOS

156 FRONT AVENUE
SALEM, OREGON
RIVERFRONT PARK LLC
429 COURT ST. NE
SALEM, OREGON 97301

project no:25094

CD/PERMIT SET	09.26.07
BUDGET SET	02.20.07
DESIGN DEVELOPMENT	10.10.06
DESIGN REVIEW	03.15.06
PRE-APP SET	03.08.06

© 2007 sienna architecture company
THESE DRAWINGS ARE THE PROPERTY OF SIENNA ARCHITECTURE COMPANY AND ARE NOT TO BE REPRODUCED IN ANY MANNER, EXCEPT WITH THE PRIOR WRITTEN PERMISSION OF SIENNA.

Drawn By Checked By Date

Sheet Title
WEST ELEVATION

Sheet Scale
AS SHOWN

Salem Fire Dept.

Sheet No.
A301

City of Salem Bldg. & Safety Div.

P:\2005\25094\Dwgs\ACAD\CURRENT\SHEET SET\25094-A301.dwg, 9/26/2007 5:18:51 PM, pdk, DWG to PDF.pc3, 1:1

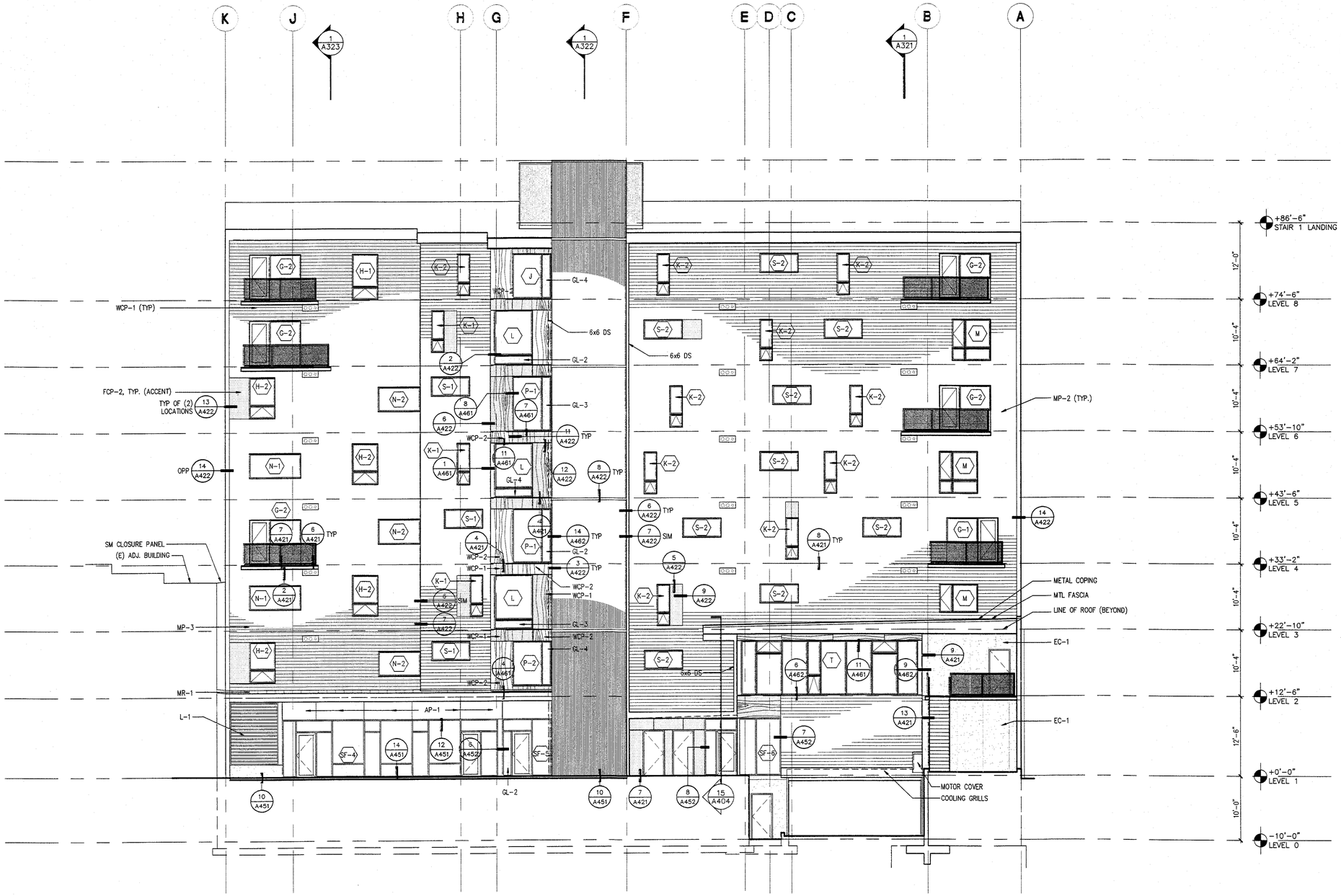

1 EAST ELEVATION

1/8"=1'-0"

0 4' 8' 12' 16' 20'

GENERAL NOTES

A. [NOTE TEXT]

B.

MATERIAL LEGEND

AP-1	ALUMINUM PANEL
BV-1	BRICK VENEER
EC-1	ELASTOMERIC COATING ON CONCRETE
FCP-1	FIBER CEMENT PANEL
GG	GLASS GUARDRAIL ASSEMBLY
GL-AS NOTED,	COLORED GLAZING
MP-1	VERTICAL CORRUGATED METAL SIDING
MP-2	HORIZONTAL BOX RIB METAL SIDING
MP-3	HORIZONTAL METAL SIDING
MR-1	STANDING SEAM METAL ROOF
WCP-1	WOOD COMPOSITE PANEL (FIELD)
WCP-2	WOOD COMPOSITE PAENL (ACCENT)
WD-1	SPACED WOOD FENCING

architecture company
sienna
411 sw sixth
portland, oregon
97204.1602
503.227.5616 v
503.227.3590 f

REGISTERED ARCHITECT
LEE R. WINN
PORTLAND, OR
STATE OF OREGON

RIVERS CONDOS

156 FRONT AVENUE
SALEM, OREGON
RIVERFRONT PARK LLC
429 COURT ST. NE
SALEM, OREGON 97301

project no:25094

CD/PERMIT SET	09.28.07
BUDGET SET	02.20.07
DESIGN DEVELOPMENT	10.10.06
DESIGN REVIEW	08.15.06
PRE-APP SET	06.09.06

© 2007 sienna architecture company
THESE DRAWINGS ARE THE PROPERTY OF SIENNA ARCHITECTURE COMPANY AND ARE NOT TO BE REPRODUCED IN ANY MANNER, EXCEPT WITH THE PRIOR WRITTEN PERMISSION OF SIENNA.

Drawn By Checked By Date

Sheet Title
EAST ELEVATION

Salem Fire Dept

Sheet Scale
AS SHOWN

Sheet No.
A302

City of Salem Bldg. & Safety Div.

P:\2005\25094\Dwgs\ACAD\CURRENT\SHEET SET\25094-A302.dwg, 9/27/2007 9:29:37 AM, pdk, DWG to PDF.pc3, 1:1

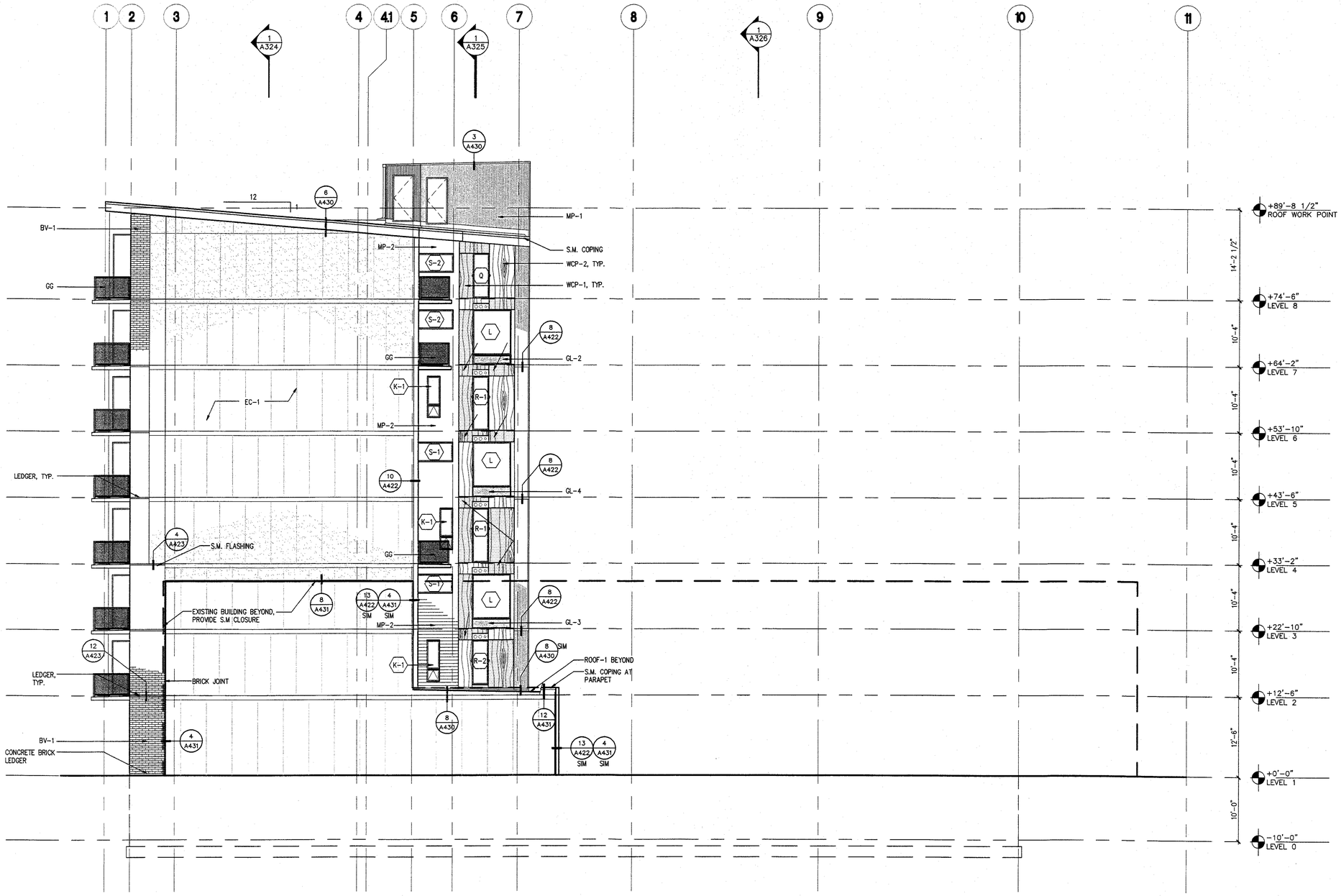

1 SOUTH ELEVATION

1/8"=1'-0"

0 4' 8' 12' 16' 20'

GENERAL NOTES

A. [NOTE TEXT]

B.

MATERIAL LEGEND

AP-1	ALUMINUM PANEL
BV-1	BRICK VENEER
EC-1	ELASTOMERIC COATING ON CONCRETE
FCP-1	FIBER CEMENT PANEL
GG	GLASS GUARDRAIL ASSEMBLY
GL-AS	NOTED, COLORED GLAZING
MP-1	VERTICAL CORRUGATED METAL SIDING
MP-2	HORIZONTAL BOX RIB METAL SIDING
MP-3	HORIZONTAL METAL SIDING
MR-1	STANDING SEAM METAL ROOF
WCP-1	WOOD COMPOSITE PANEL (FIELD)
WCP-2	WOOD COMPOSITE PAENL (ACCENT)
WD-1	SPACED WOOD FENCING

architecture company
sienna
411 sw sixth
portland, oregon
97204.1602
503.227.5616 v
503.227.3590 f

REGISTERED ARCHITECT
LEE R. WINN
PORTLAND, OR
STATE OF OREGON

RIVERS CONDOS

156 FRONT AVENUE
SALEM, OREGON
RIVERFRONT PARK LLC
429 COURT ST. NE
SALEM, OREGON 97301

project no:25094

CD/PERMIT SET	09.26.07
BUDGET SET	02.20.07
DESIGN DEVELOPMENT	10.10.06
DESIGN REVIEW	00.15.06
PRE-APP SET	00.09.06

© 2007 sienna architecture company
THESE DRAWINGS ARE THE PROPERTY OF SIENNA ARCHITECTURE COMPANY AND ARE NOT TO BE REPRODUCED IN ANY MANNER, EXCEPT WITH THE PRIOR WRITTEN PERMISSION OF SIENNA.

Drawn By Checked By Date

Sheet Title
SOUTH ELEVATION

Salem Fire Dept

Sheet Scale
AS SHOWN

Sheet No.
A303

City of Salem
Bldg. & Safety Div.

P:\2005\25094\Dwgs\ACAD\CURRENT\SHEET SET\25094-A303.dwg, 9/26/2007 5:04:50 PM, pdk, DWG to PDF.pc3, 1:1

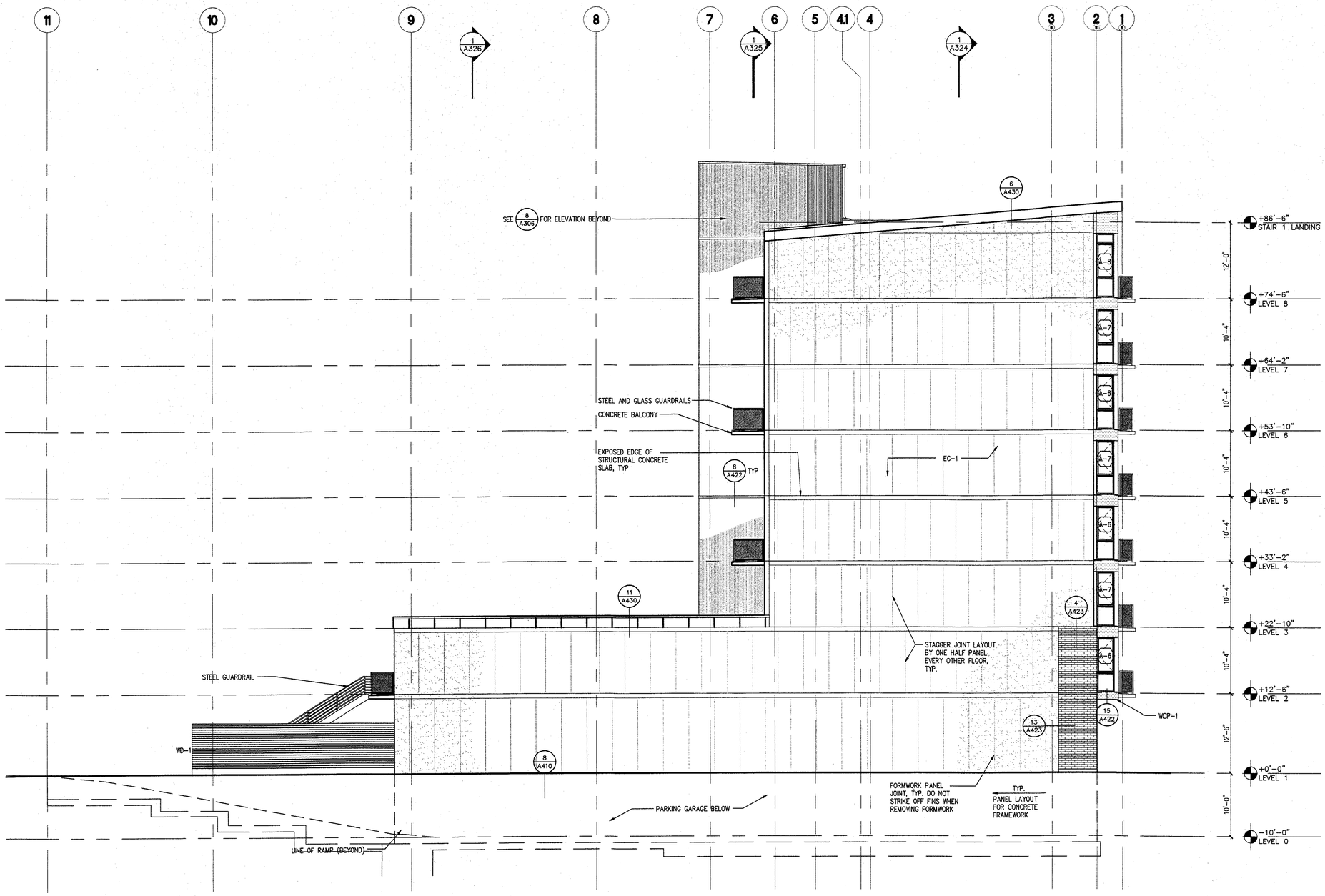

1 NORTH ELEVATION

1/8"=1'-0"

0 4' 8' 12' 16' 20'

GENERAL NOTES

A. [NOTE TEXT]

B.

MATERIAL LEGEND

AP-1	ALUMINUM PANEL
BV-1	BRICK VENEER
EC-1	ELASTOMERIC COATING ON CONCRETE
FCP-1	FIBER CEMENT PANEL
GG	GLASS GUARDRAIL ASSEMBLY
GL-AS NOTED,	COLORED GLAZING
MP-1	VERTICAL CORRUGATED METAL SIDING
MP-2	HORIZONTAL BOX RIB METAL SIDING
MP-3	HORIZONTAL METAL SIDING
MR-1	STANDING SEAM METAL ROOF
WCP-1	WOOD COMPOSITE PANEL (FIELD)
WCP-2	WOOD COMPOSITE PAENL (ACCENT)
WD-1	SPACED WOOD FENCING

architecture company
sienna
411 sw sixth
portland, oregon
97204.1602
503.227.5616 v
503.227.3590 f

REGISTERED ARCHITECT
LEE R. WINN
PORTLAND, OR
STATE OF OREGON

RIVERS CONDOS

156 FRONT AVENUE
SALEM, OREGON
RIVERFRONT PARK LLC
429 COURT ST. NE
SALEM, OREGON 97301

project no:25094

CD/PERMIT SET	09.26.07
BUDGET SET	02.20.07
DESIGN DEVELOPMENT	10.10.06
DESIGN REVIEW	06.15.06
PRE-APP SET	03.09.06

© 2007 sienna architecture company
THESE DRAWINGS ARE THE PROPERTY OF SIENNA ARCHITECTURE COMPANY AND ARE NOT TO BE REPRODUCED IN ANY MANNER, EXCEPT WITH THE PRIOR WRITTEN PERMISSION OF SIENNA.

Drawn By Checked By Date

Sheet Title
NORTH ELEVATION

Salem Fire Dept

Sheet Scale
AS SHOWN

Sheet No.
A304

City of Salem Bldg. & Safety Div.

P:\2005\25094\Dwgs\ACAD\CURRENT\SHT-1 SF-1\25094-A304.dwg, 9/26/2007 5:04:55 PM, pdk, DWG to PDF.pc3, 1:1

GENERAL NOTES

A. [NOTE TEXT]

B.

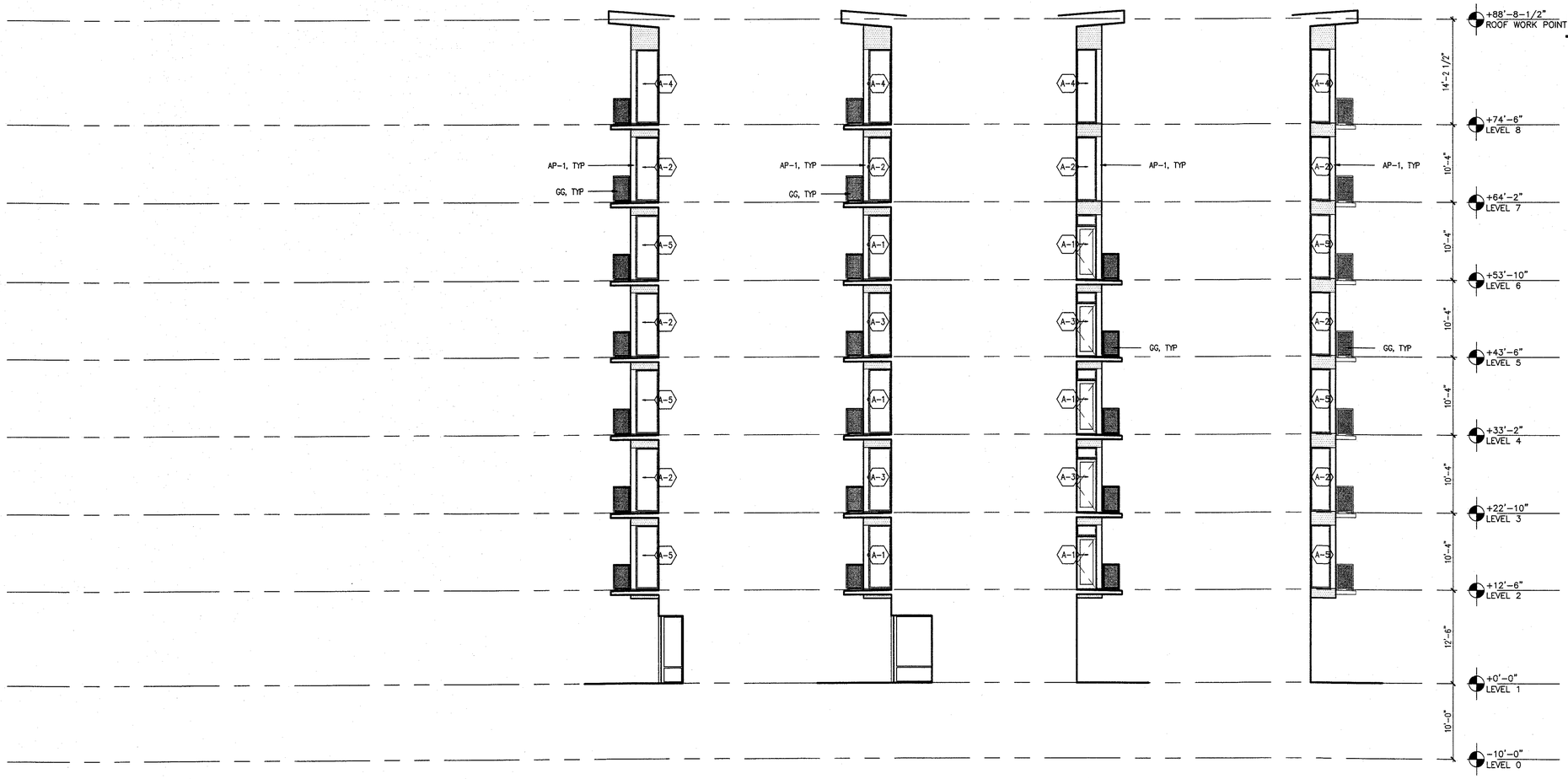

1 PART'L S. ELEV.
1/8"=1'-0"

2 PART'L S. ELEV.
1/8"=1'-0"

3 PART'L N. ELEV.
1/8"=1'-0"

4 PART'L N. ELEV.
1/8"=1'-0"

0 4' 8' 12' 16' 20'

MATERIAL LEGEND

AP-1	ALUMINUM PANEL
BV-1	BRICK VENEER
EC-1	ELASTOMERIC COATING ON CONCRETE
FCP-1	FIBER CEMENT PANEL
GG	GLASS GUARDRAIL ASSEMBLY
GL-AS NOTED,	COLORED GLAZING
MP-1	VERTICAL CORRUGATED METAL SIDING
MP-2	HORIZONTAL BOX RIB METAL SIDING
MP-3	HORIZONTAL METAL SIDING
MR-1	STANDING SEAM METAL ROOF
WCP-1	WOOD COMPOSITE PANEL (FIELD)
WCP-2	WOOD COMPOSITE PAENL (ACCENT)
WD-1	SPACED WOOD FENCING

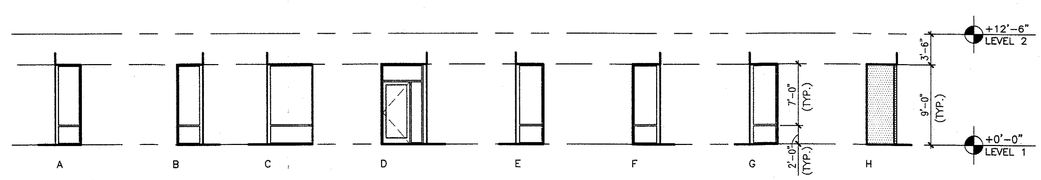

GENERAL NOTE:
SEE STOREFRONT ELEVATIONS ON SHEET A703 FOR MORE INFORMATION

5 STOREFRONT ELEVATIONS
1/8"=1'-0"

architecture company
sienna
411 sw sixth
portland, oregon
97204.1602
503.227.5616 v
503.227.3590 f

REGISTERED ARCHITECT
LEE R. WINN
PORTLAND, OR
STATE OF OREGON

RIVERS CONDOS

156 FRONT AVENUE
SALEM, OREGON
RIVERFRONT PARK LLC
429 COURT ST. NE
SALEM, OREGON 97301

project no:25094

CD/PERMIT SET	09.26.07
BUDGET SET	02.20.07
DESIGN DEVELOPMENT	10.10.06
DESIGN REVIEW	06.15.06
PRE-APP SET	03.09.06

© 2007 sienna architecture company
THESE DRAWINGS ARE THE PROPERTY OF SIENNA ARCHITECTURE COMPANY AND ARE NOT TO BE REPRODUCED IN ANY MANNER, EXCEPT WITH THE PRIOR WRITTEN PERMISSION OF SIENNA.

Drawn By Checked By Date

Sheet Title
PARTIAL EXTERIOR ELEVATIONS

Salem Fire Dept

Sheet Scale
AS SHOWN

Sheet No.
A305

City of Salem
Bldg. & Safety Div.

P:\2005\25094\Dwgs\ACAD\CURRENT\SHEET SET\25094-A305.dwg, 9/26/2007 5:04:27 PM, pdk, DWG to PDF.pc3, 1:1

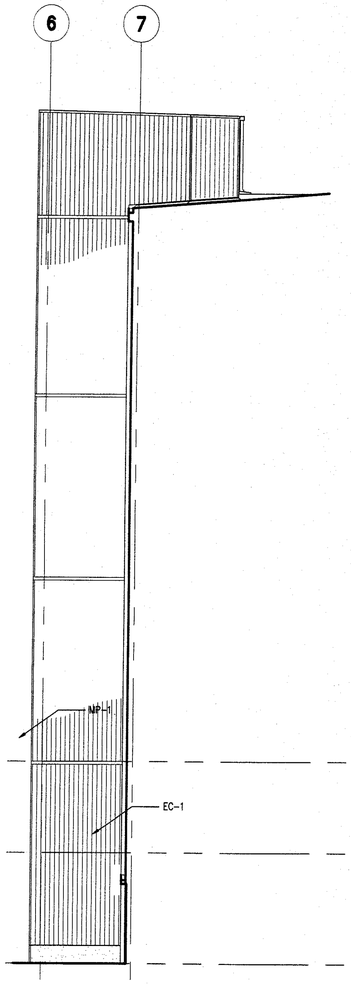

1 PARTIAL NORTH ELEVATION

1/8"=1'-0"

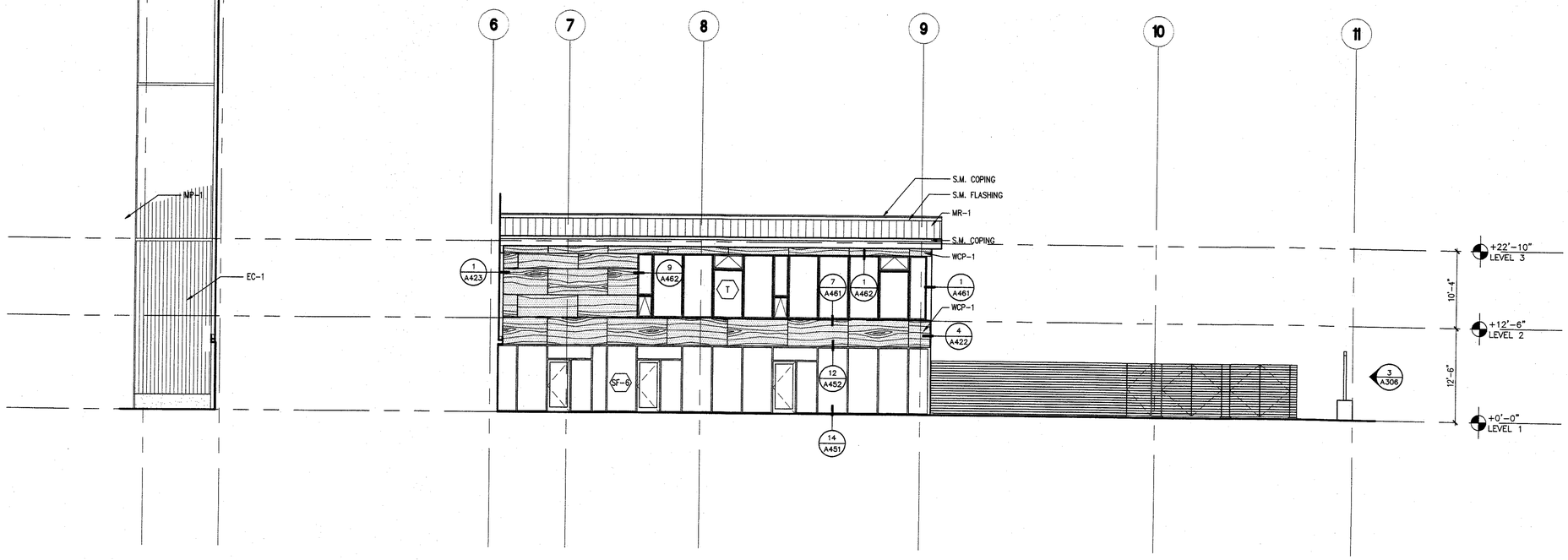

2 PARTIAL SOUTH ELEVATION

1/8"=1'-0"

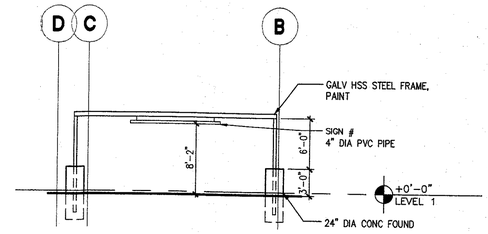

3 GARAGE ENTRY SIGN

1/8"=1'-0"

0 4' 8' 12' 16' 20'

GENERAL NOTES

A. [NOTE TEXT]

B.

MATERIAL LEGEND

AP-1	ALUMINUM PANEL
BV-1	BRICK VENEER
EC-1	ELASTOMERIC COATING ON CONCRETE
FCP-1	FIBER CEMENT PANEL
GG	GLASS GUARDRAIL ASSEMBLY
GL-AS	NOTED, COLORED GLAZING
MP-1	VERTICAL CORRUGATED METAL SIDING
MP-2	HORIZONTAL BOX RIB METAL SIDING
MP-3	HORIZONTAL METAL SIDING
MR-1	STANDING SEAM METAL ROOF
WCP-1	WOOD COMPOSITE PANEL (FIELD)
WCP-2	WOOD COMPOSITE PAENL (ACCENT)
WD-1	SPACED WOOD FENCING

architecture company
sienna
411 sw sixth
portland, oregon
97204.1602
503.227.5616 v
503.227.3590 f

REGISTERED ARCHITECT
LEE R. WINN
PORTLAND, OR
STATE OF OREGON

RIVERS CONDOS

156 FRONT AVENUE
SALEM, OREGON
RIVERFRONT PARK LLC
429 COURT ST. NE
SALEM, OREGON 97301

project no:25094

CD/PERMIT SET	09.26.07
BUDGET SET	02.20.07
DESIGN DEVELOPMENT	10.10.06
DESIGN REVIEW	03.15.06
PRE-APP SET	08.09.06

© 2007 sienna architecture company
THESE DRAWINGS ARE THE PROPERTY OF SIENNA ARCHITECTURE COMPANY AND ARE NOT TO BE REPRODUCED IN ANY MANNER, EXCEPT WITH THE PRIOR WRITTEN PERMISSION OF SIENNA.

Drawn By Checked By Date

Sheet Title

PARTIAL EXTERIOR ELEVATIONS

Salem Fire Dept.

Sheet Scale

AS SHOWN

Sheet No.

A306

City of Salem
Bldg. & Safety Div.

P:\2005\25094\Dwgs\ACAD\CURRENT\SHEET SET\25094-A306.dwg, 9/26/2007 5:18:12 PM, pdk, DWG to PDF.pc3, 1:1

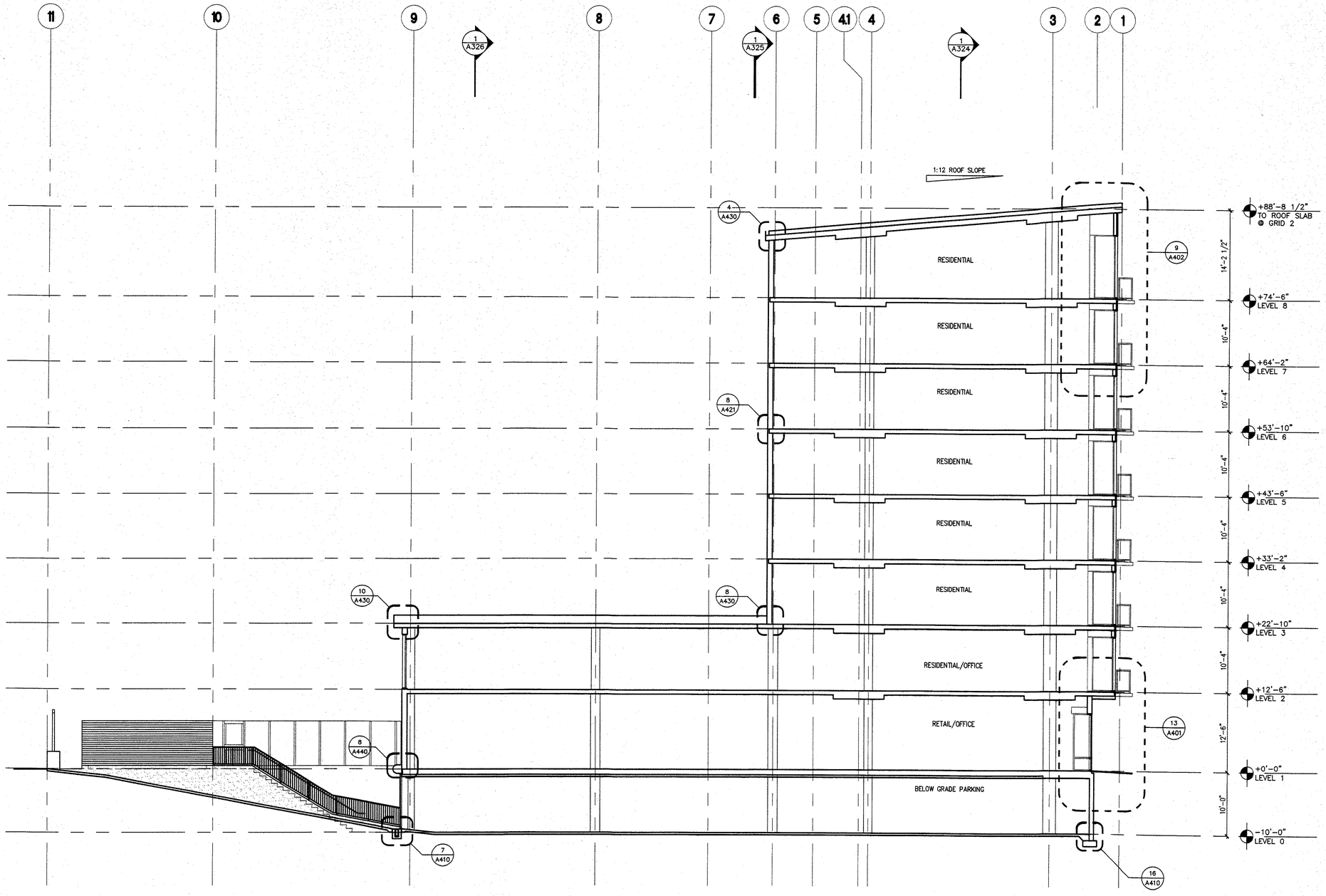

1 BUILDING SECTION

1/8"=1'-0"

0 4' 8' 12' 16' 20'

FLOOR / LANDINGS
Floor/Landing shall not be more than 1/2 inch lower than the threshold of the doorway; shall have a length measured in the direction of travel of not less than 44 inches.

architecture company
sienna
411 sw sixth
portland, oregon
97204.1602
503.227.5616 v
503.227.3590 f

REGISTERED ARCHITECT
LEE R. WINN
PORTLAND, OR
STATE OF OREGON

RIVERS CONDOS

156 FRONT AVENUE
SALEM, OREGON
RIVERFRONT PARK LLC
429 COURT ST. NE
SALEM, OREGON 97301
project no:25094

CD/PERMIT SET	09.26.07
BUDGET SET	02.20.07
DESIGN DEVELOPMENT	10.10.06
DESIGN REVIEW	03.15.06
PRE-APP SET	03.09.06

© 2007 sienna architecture company
THESE DRAWINGS ARE THE PROPERTY OF SIENNA ARCHITECTURE COMPANY AND ARE NOT TO BE REPRODUCED IN ANY MANNER, EXCEPT WITH THE PRIOR WRITTEN PERMISSION OF SIENNA.

Drawn By Checked By Date

Sheet Title
BUILDING SECTION

Salem Fire Dept.

Sheet Scale
AS SHOWN

Sheet No.
A321

City of Salem
Bldg. & Safety Div.

P:\2005\25094\Dwgs\ACAD\CURRENT\SHEET SET\25094-A321.dwg, 9/26/2007 5:17:19 PM, pdk, DWG to PDF.pc3, 1:1

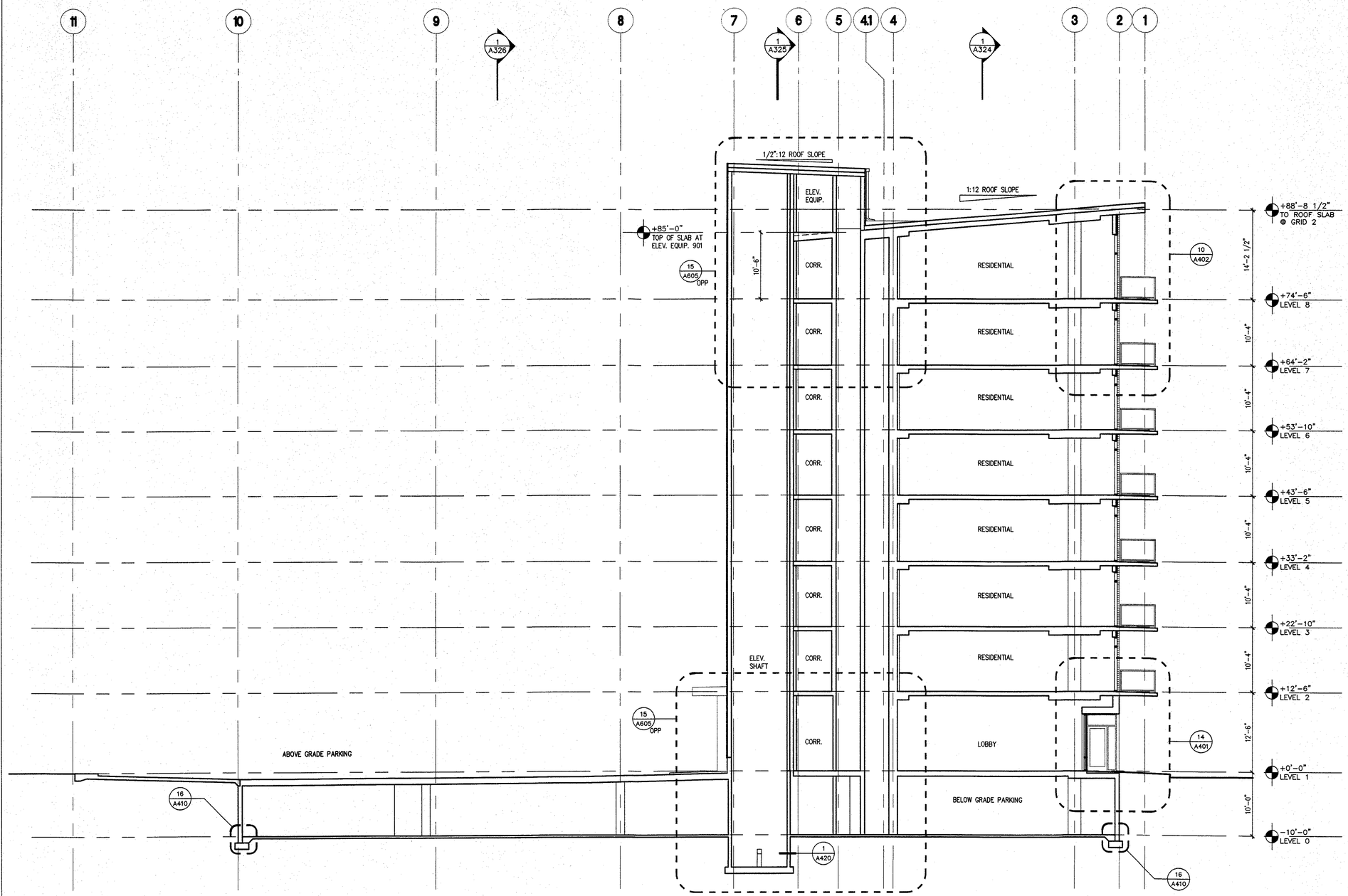

1 BUILDING SECTION

1/8"=1'-0"

0 4' 8' 12' 16' 20'

architecture company
sienna
411 sw sixth
portland, oregon
97204.1602
503.227.5616 v
503.227.3590 f

REGISTERED ARCHITECT
LEE R. WINN
PORTLAND, OR
STATE OF OREGON

RIVERS CONDOS

156 FRONT AVENUE
SALEM, OREGON
RIVERFRONT PARK LLC
429 COURT ST. NE
SALEM, OREGON 97301

project no:25094

CD/PERMIT SET	09.26.07
BUDGET SET	02.20.07
DESIGN DEVELOPMENT	10.10.06
DESIGN REVIEW	03.15.06
PRE-APP SET	03.09.06

© 2007 sienna architecture company
THESE DRAWINGS ARE THE PROPERTY OF SIENNA ARCHITECTURE COMPANY AND ARE NOT TO BE REPRODUCED IN ANY MANNER, EXCEPT WITH THE PRIOR WRITTEN PERMISSION OF SIENNA.

Drawn By Checked By Date

Sheet Title
BUILDING SECTION

Salem Fire Dept

Sheet Scale
AS SHOWN

Sheet No.
A322

City of Salem Bldg. & Safety Div.

P:\2005\25094\Dwgs\AC AD\CURRENT\SHEET SET\25094-A322.dwg, 9/26/2007 5:17:09 PM, pdk, DWG to PDF.pc3, 1:1

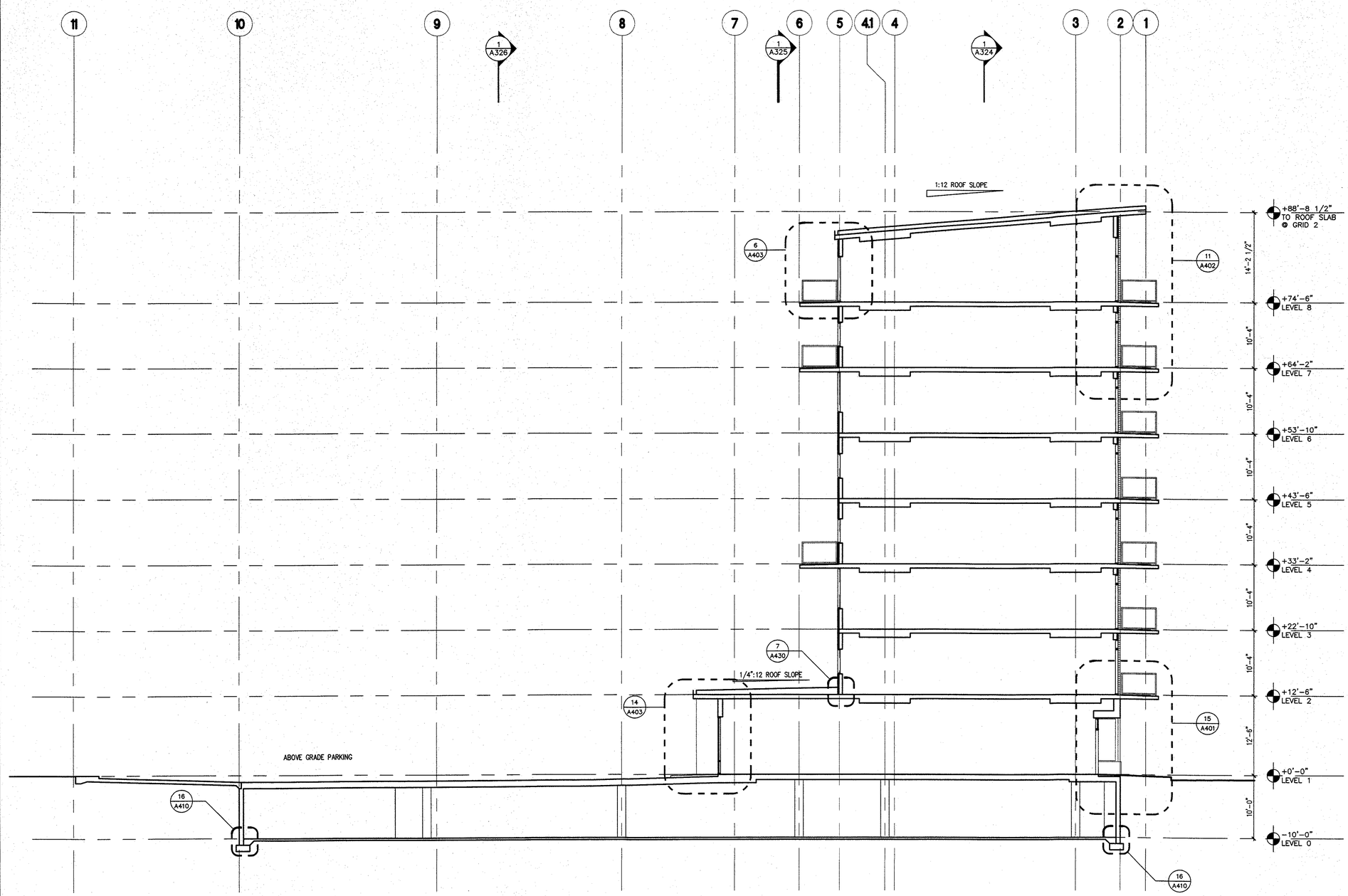

1 BUILDING SECTION

1/8"=1'-0"

0 4' 8' 12' 16' 20'

architecture company
sienna
411 sw sixth
portland, oregon
97204.1602
503.227.5616 v
503.227.3590 f

REGISTERED ARCHITECT
LEE R. WINN
PORTLAND, OR
STATE OF OREGON

RIVERS CONDOS

156 FRONT AVENUE
SALEM, OREGON
RIVERFRONT PARK LLC
429 COURT ST. NE
SALEM, OREGON 97301

project no:25094

CD/PERMIT SET	09.26.07
BUDGET SET	02.20.07
DESIGN DEVELOPMENT	10.10.06
DESIGN REVIEW	03.15.06
PRE-APP SET	03.09.06

© 2007 sienna architecture company
THESE DRAWINGS ARE THE PROPERTY OF SIENNA ARCHITECTURE COMPANY AND ARE NOT TO BE REPRODUCED IN ANY MANNER, EXCEPT WITH THE PRIOR WRITTEN PERMISSION OF SIENNA.

Drawn By Checked By Date

Sheet Title
BUILDING

SECTION

Salem Fire Dept

Sheet Scale
AS SHOWN

Sheet No.
A323

City of Salem
Bldg. & Safety Div.

P:\2005\25094\Dwgs\ACAD\CURRENT\SHEET SET\25094-A323.dwg, 9/26/2007 5:16:55 PM, pdf, DWG to PDF.pc3, 1:1

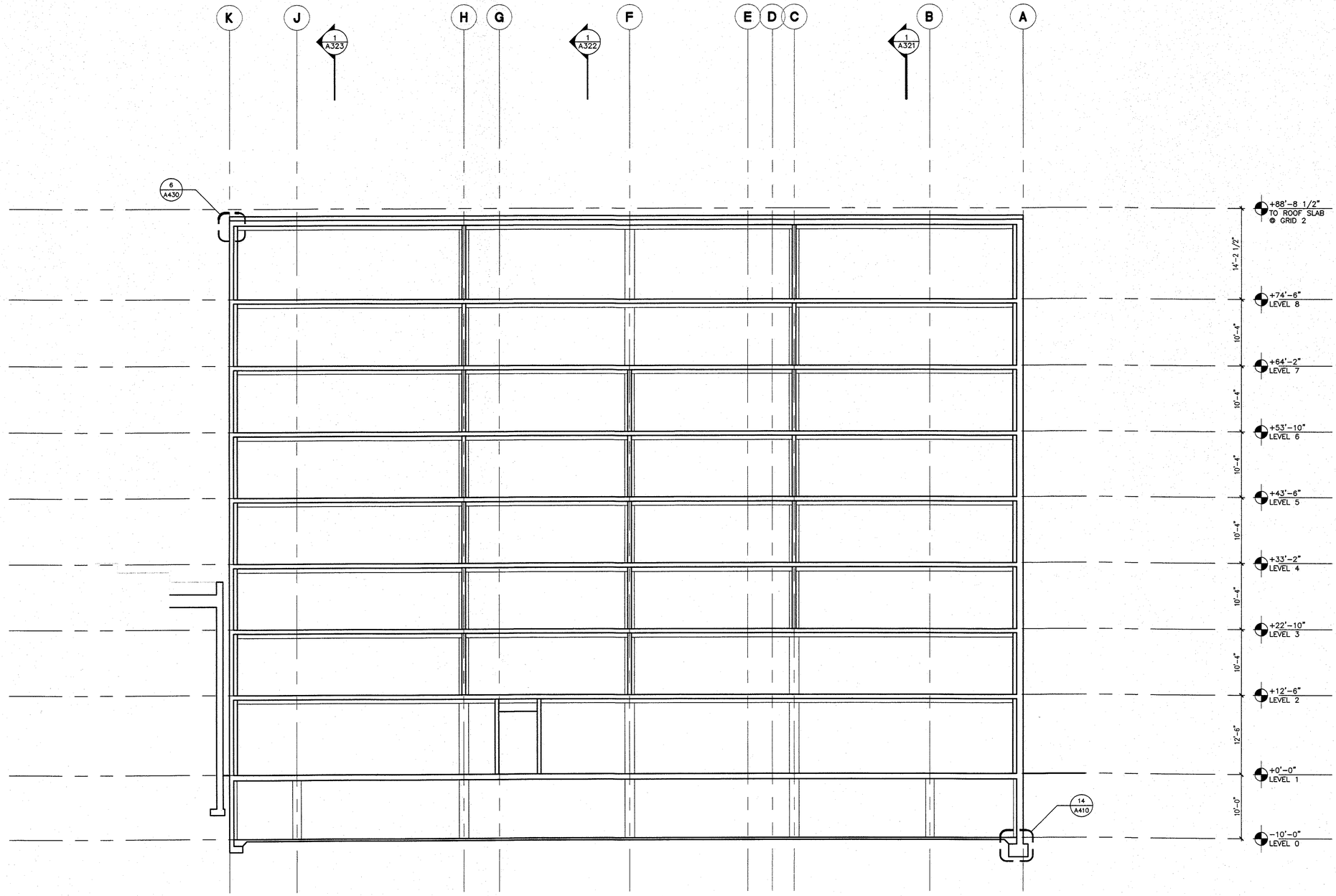

1 BUILDING SECTION

1/8"=1'-0"

0 4' 8' 12' 16' 20'

architecture company
sienna
411 sw sixth
portland, oregon
97204.1602
503.227.5616 v
503.227.3590 f

REGISTERED ARCHITECT
LEE R. WINN
PORTLAND, OR
STATE OF OREGON

RIVERS CONDOS

156 FRONT AVENUE
SALEM, OREGON
RIVERFRONT PARK LLC
429 COURT ST. NE
SALEM, OREGON 97301

project no:25094

CD/PERMIT SET	09.26.07
BUDGET SET	02.20.07
DESIGN DEVELOPMENT	10.10.06
DESIGN REVIEW	03.15.06
PRE-APP SET	03.09.06

© 2007 sienna architecture company
THESE DRAWINGS ARE THE PROPERTY OF SIENNA ARCHITECTURE COMPANY AND ARE NOT TO BE REPRODUCED IN ANY MANNER, EXCEPT WITH THE PRIOR WRITTEN PERMISSION OF SIENNA.

Drawn By Checked By Date

Sheet Title
BUILDING
SECTION

Salem Fire Dept

Sheet Scale
AS SHOWN

Sheet No.
A324

City of Salem
Bldg. & Safety Div.

P:\2005\25094\Dwgs\ACAD\CURRENT\SHEET SET\25094-A324.dwg, 9/26/2007 2:16:39 PM, pdfc.DWG to PDF.pc3, 1:1

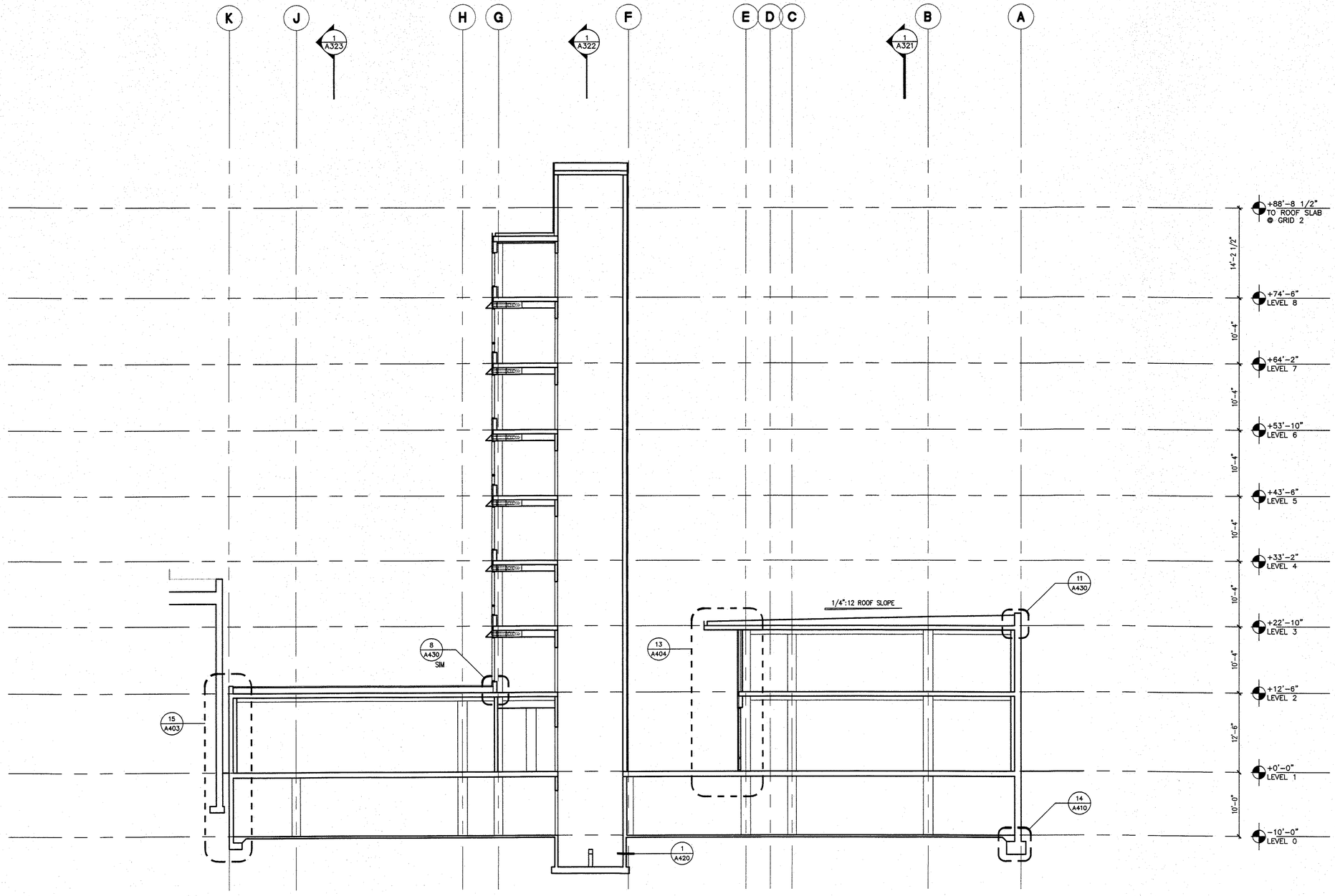

1 BUILDING SECTION

1/8"=1'-0"

0 4' 8' 12' 16' 20'

architecture company
sienna
411 sw sixth
portland, oregon
97204.1602
503.227.5616 v
503.227.3590 f

REGISTERED ARCHITECT
LEE R. WINN
PORTLAND, OR
STATE OF OREGON

RIVERS CONDOS

156 FRONT AVENUE
SALEM, OREGON
RIVERFRONT PARK LLC
429 COURT ST. NE
SALEM, OREGON 97301

project no:25094

CD/PERMIT SET	09.26.07
BUDGET SET	02.20.07
DESIGN DEVELOPMENT	10.10.06
DESIGN REVIEW	03.15.06
PRE-APP SET	03.09.06

© 2007 sienna architecture company
THESE DRAWINGS ARE THE PROPERTY OF SIENNA ARCHITECTURE COMPANY AND ARE NOT TO BE REPRODUCED IN ANY MANNER, EXCEPT WITH THE PRIOR WRITTEN PERMISSION OF SIENNA.

Drawn By Checked By Date

Sheet Title
BUILDING SECTION

Salem Fire Dept

Sheet Scale
AS SHOWN

Sheet No.
A325

City of Salem
Bldg. & Safety Div.

P:\2005\25094\Dwgs\ACAD\CURRENT SHEET SET\25094-A325.dwg, 9/26/2007 5:16:24 PM, pdf, DWG to PDF.pc3, 1:1

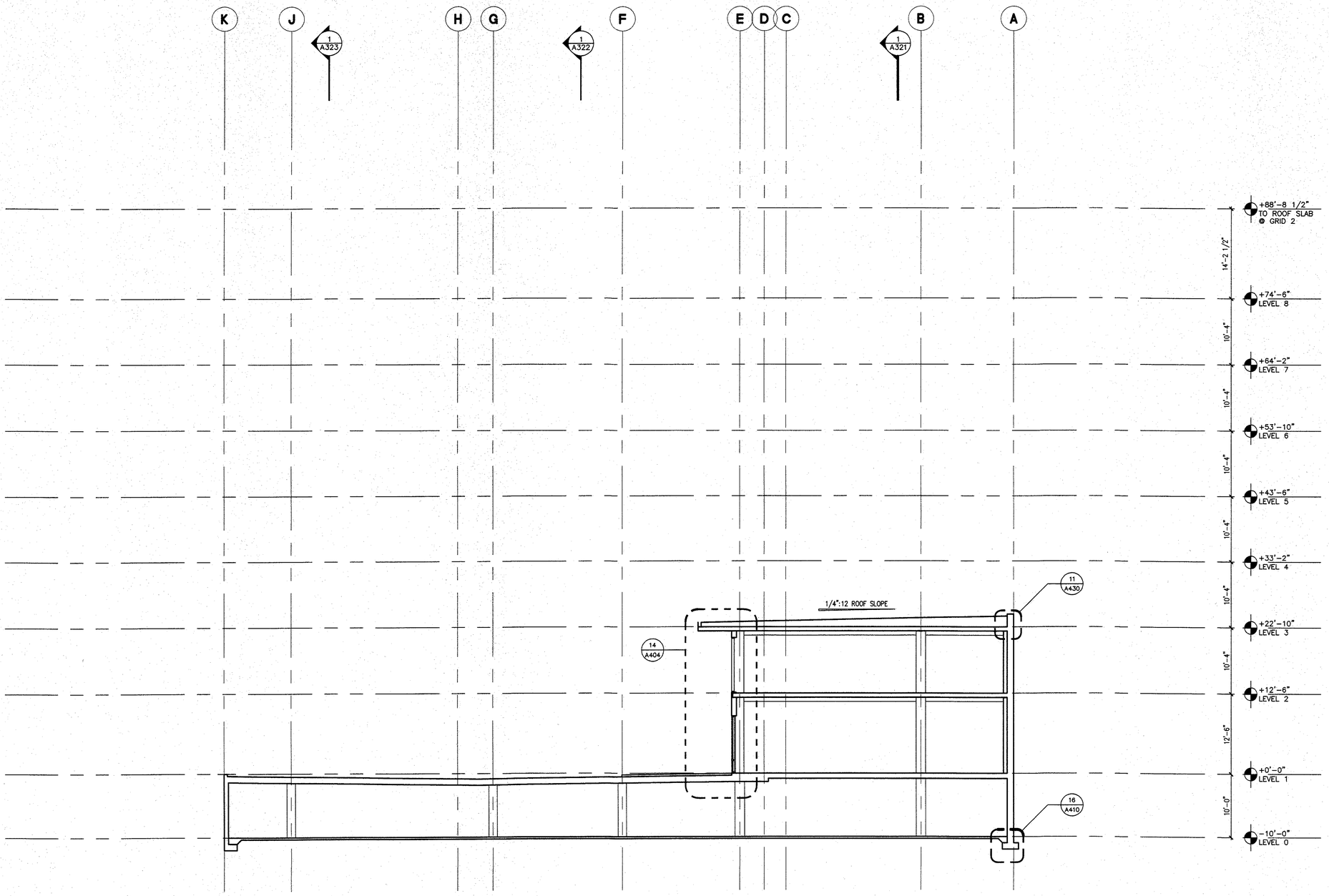

1 BUILDING SECTION

1/8"=1'-0"

0 4' 8' 12' 16' 20'

architecture company
sienna
411 sw sixth
portland, oregon
97204.1602
503.227.5616 v
503.227.3590 f

REGISTERED ARCHITECT
LEE R. WINN
PORTLAND, OR
STATE OF OREGON

RIVERS CONDOS

156 FRONT AVENUE
SALEM, OREGON
RIVERFRONT PARK LLC
429 COURT ST. NE
SALEM, OREGON 97301

project no:25094

CD/PERMIT SET	09.26.07
BUDGET SET	02.20.07
DESIGN DEVELOPMENT	10.10.06
DESIGN REVIEW	06.15.06
PRE-APP SET	03.09.06

© 2007 sienna architecture company
THESE DRAWINGS ARE THE PROPERTY OF SIENNA ARCHITECTURE COMPANY AND ARE NOT TO BE REPRODUCED IN ANY MANNER, EXCEPT WITH THE PRIOR WRITTEN PERMISSION OF SIENNA.

Drawn By Checked By Date

Sheet Title
BUILDING
SECTION

Salem Fire Dept.

Sheet Scale
AS SHOWN

Sheet No.
A326

City of Salem
Bldg. & Safety Div.

H:\2005\25094\Dwgs\ARCADV\CURRNN\SHH-1-S:\25094-A326.dwg, 9/26/2007 3:16:12 PM, pdk, DWG to PDF.pc3, 1:1

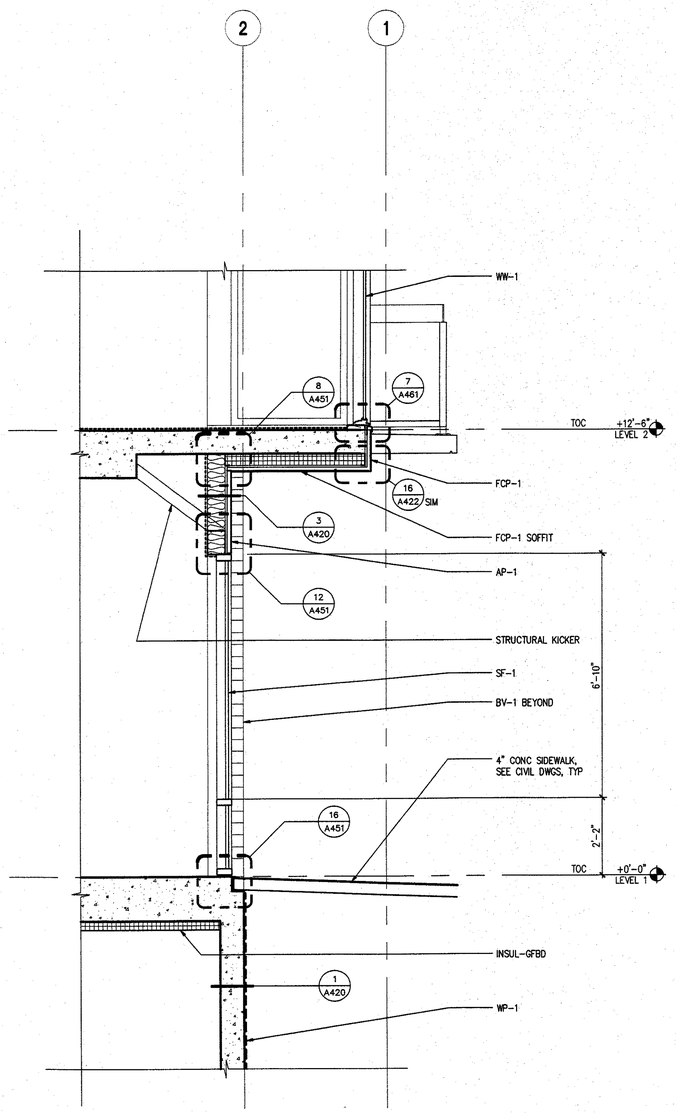

13 WALL SECTION

1/2"=1'-0"

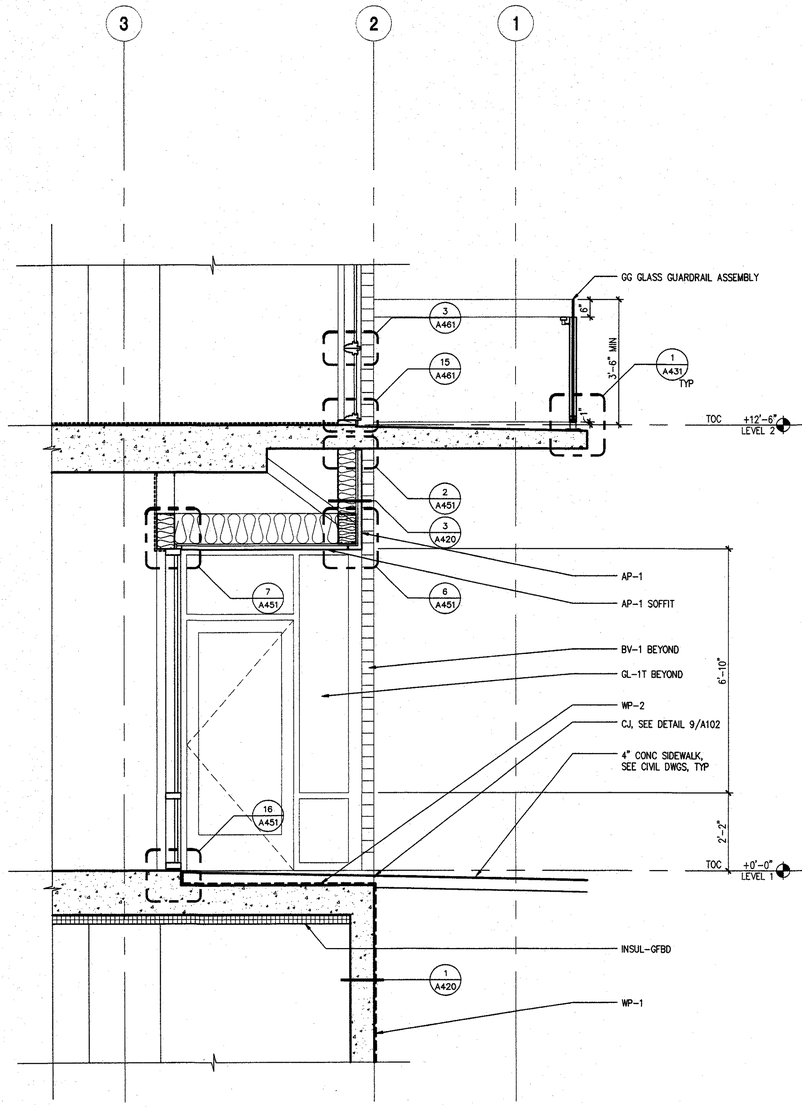

14 WALL SECTION

1/2"=1'-0"

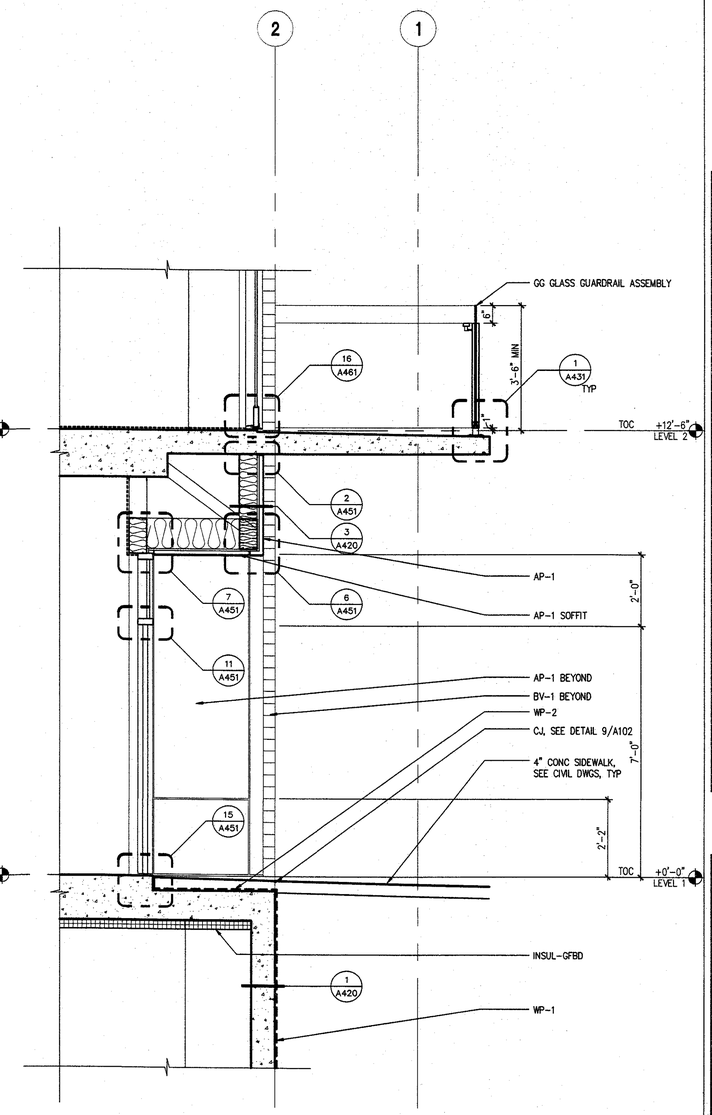

15 WALL SECTION

1/2"=1'-0"

architecture company
sienna
411 sw sixth
portland, oregon
97204.1602
503.227.5616 v
503.227.3590 f

REGISTERED ARCHITECT
LEE R. WINN
PORTLAND, OR
STATE OF OREGON

RIVERS CONDOS

156 FRONT AVENUE
SALEM, OREGON
RIVERFRONT PARK LLC
429 COURT ST. NE
SALEM, OREGON 97301

project no:25094

CD/PERMIT SET	09.26.07
BUDGET SET	02.20.07
DESIGN DEVELOPMENT	10.10.06
DESIGN REVIEW	03.15.06
PRE-APP SET	03.09.06

© 2007 sienna architecture company
THESE DRAWINGS ARE THE PROPERTY OF SIENNA ARCHITECTURE COMPANY AND ARE NOT TO BE REPRODUCED IN ANY MANNER, EXCEPT WITH THE PRIOR WRITTEN PERMISSION OF SIENNA.

Drawn By Checked By Date

Sheet Title
WALL

SECTIONS

Salem Fire Dept

Sheet Scale
AS SHOWN

Sheet No.
A401

City of Salem
Bldg & Safety Div.

P:\2005\25094\Dwgs\ACAD\CURRENT\SHEET SET\25094-A401.dwg, 9/27/2007 12:14:44 PM, pdk, DWG to PDF.pc3, 1:1

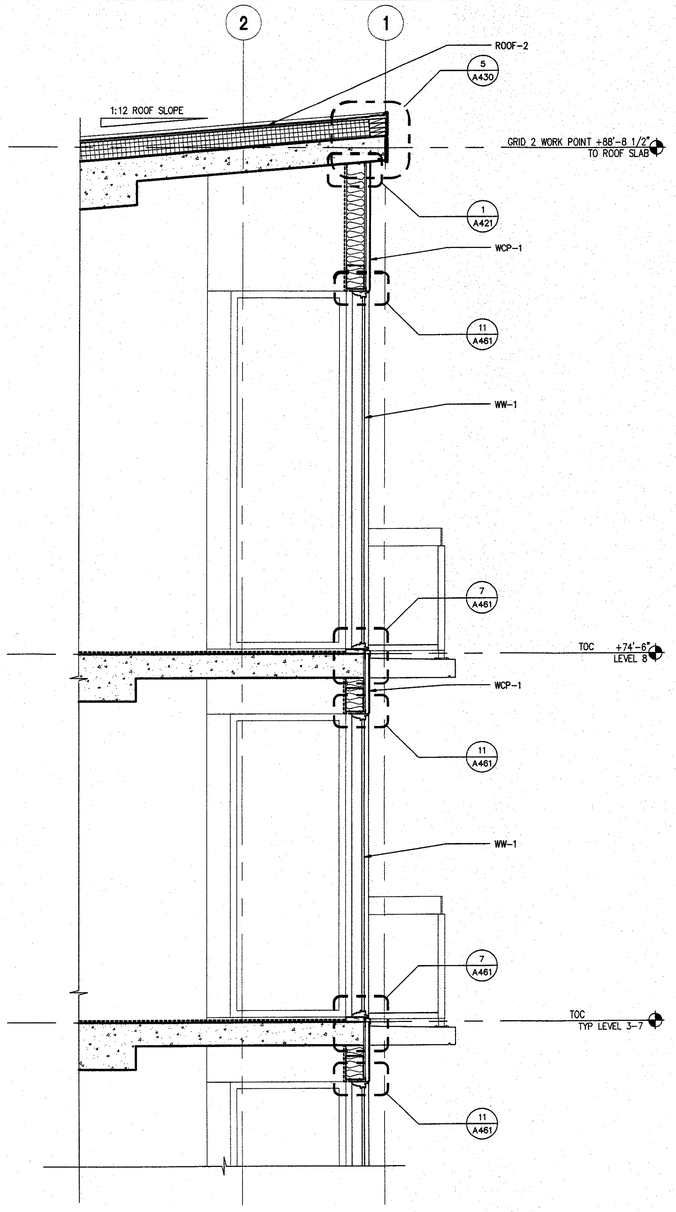

9 WALL SECTION

1/2"=1'-0"

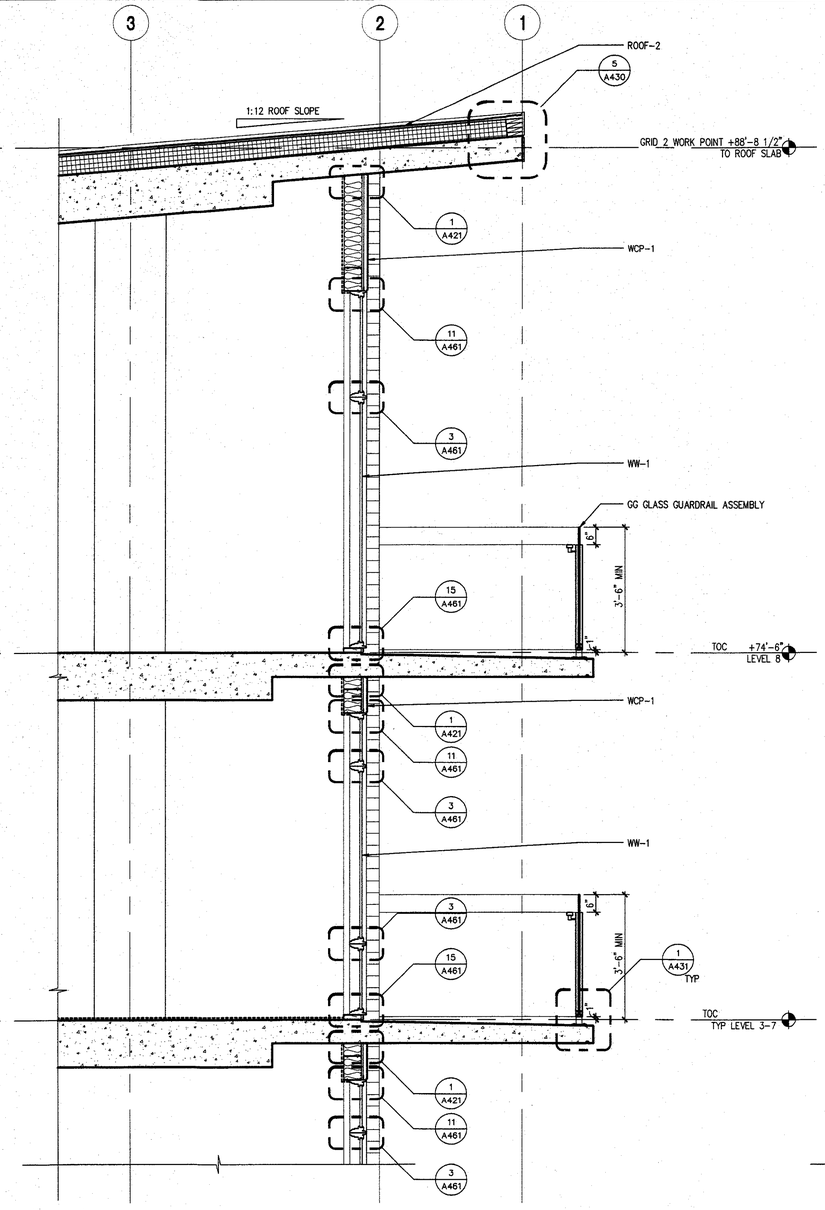

10 WALL SECTION

1/2"=1'-0"

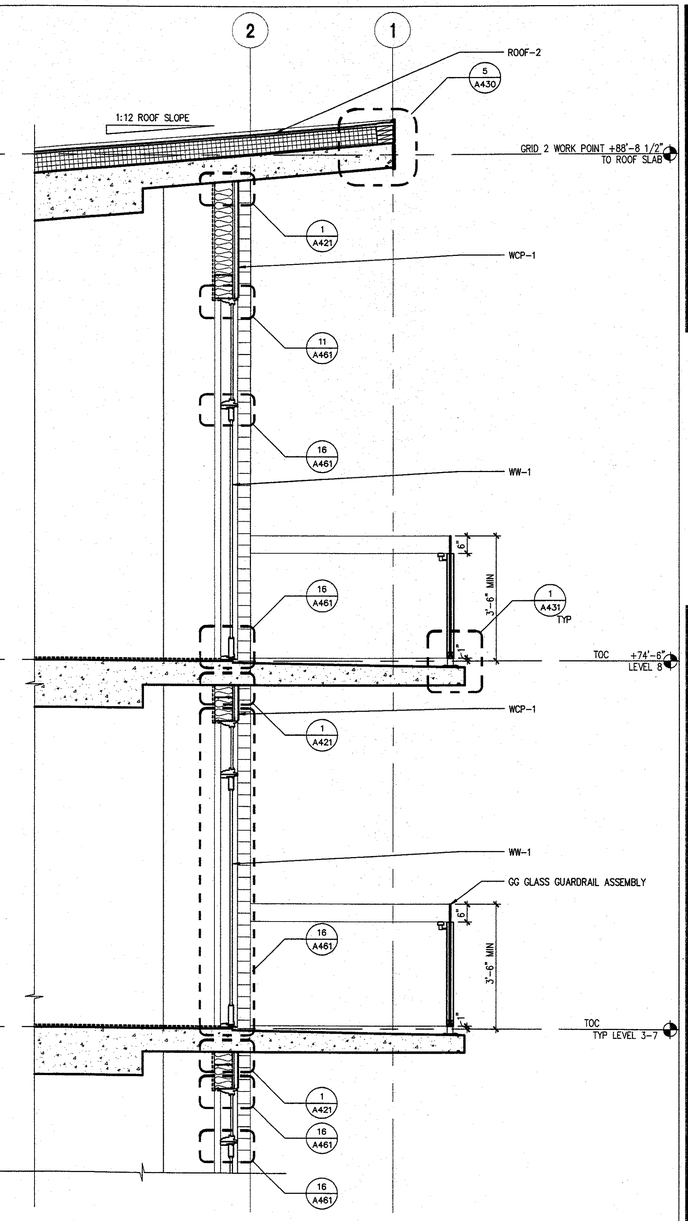

11 WALL SECTION

1/2"=1'-0"

architecture company
sienna
411 sw sixth
portland, oregon
97204.1602
503.227.5616 v
503.227.3590 f

REGISTERED ARCHITECT
LEE R. WINN
PORTLAND, OR
STATE OF OREGON

RIVERS CONDOS

156 FRONT AVENUE
SALEM, OREGON
RIVERFRONT PARK LLC
429 COURT ST. NE
SALEM, OREGON 97301

project no:25094

CD/PERMIT SET	09.28.07
BUDGET SET	02.20.07
DESIGN DEVELOPMENT	10.10.06
DESIGN REVIEW	03.15.06
PRE-APP SET	03.09.06

© 2007 sienna architecture company
THESE DRAWINGS ARE THE PROPERTY OF SIENNA ARCHITECTURE COMPANY AND ARE NOT TO BE REPRODUCED IN ANY MANNER, EXCEPT WITH THE PRIOR WRITTEN PERMISSION OF SIENNA.

Drawn By Checked By Date

Sheet Title
WALL

SECTIONS

Salem Fire Dept

Sheet Scale
AS SHOWN

Sheet No.
A402

City of Salem
Bldg. & Safety Div.

P:\2005\25094\Dwgs\ACAD\CURRENT\SHEET SET\25094-A402.dwg, 9/27/2007 12:13:39 PM, pdk, DWG to PDF.pc3, 1:1

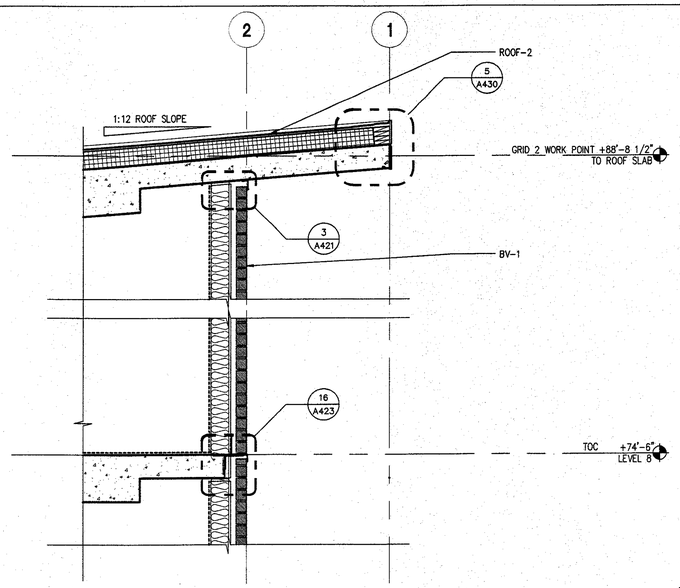

5 WALL SECTION

1/2"=1'-0"

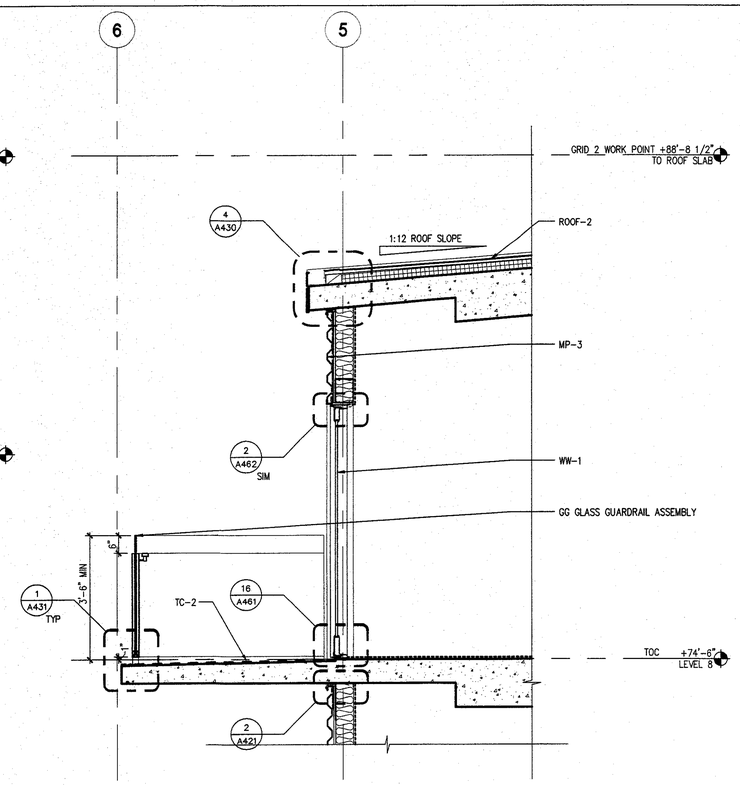

6 WALL SECTION

1/2"=1'-0"

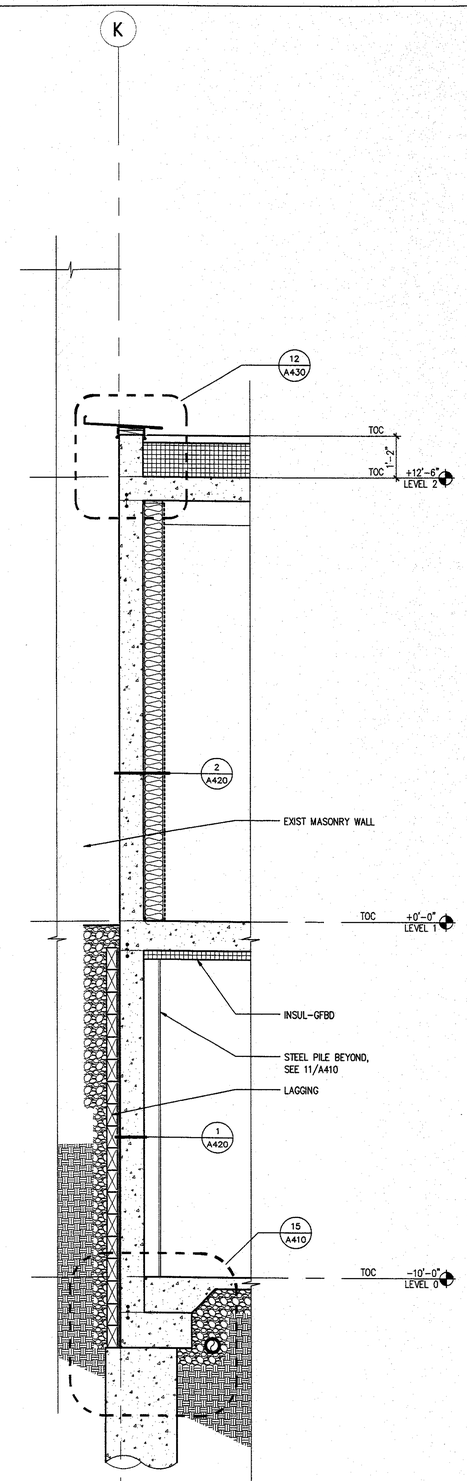

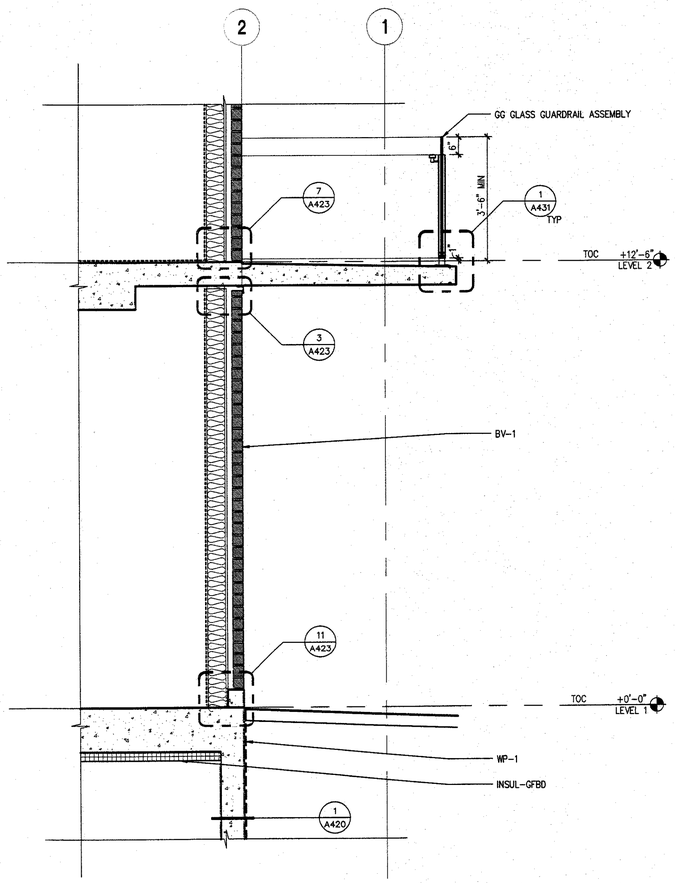

13 WALL SECTION

1/2"=1'-0"

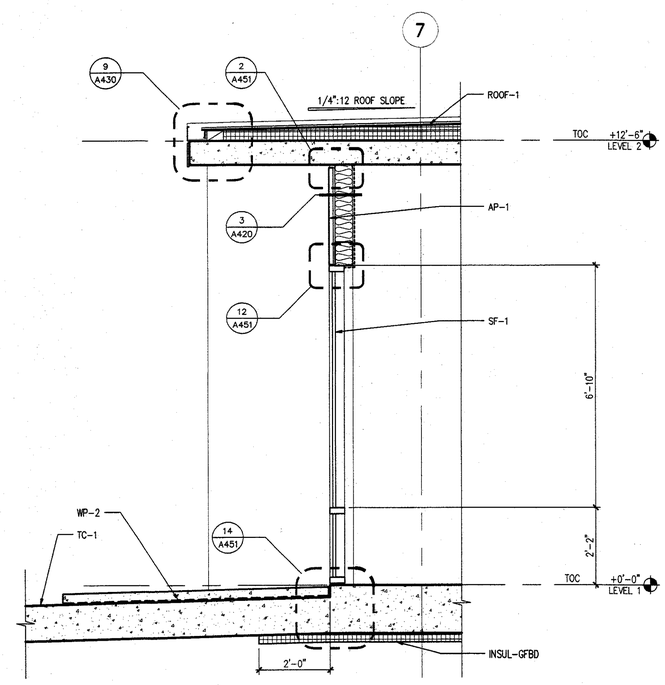

14 WALL SECTION

1/2"=1'-0"

15 WALL SECTION

1/2"=1'-0"

architecture company
sienna
411 sw sixth
portland, oregon
97204.1602
503.227.5616 v
503.227.3590 f

REGISTERED ARCHITECT
LEE R. WINN
PORTLAND, OR
STATE OF OREGON

RIVERS CONDOS

156 FRONT AVENUE
SALEM, OREGON
RIVERFRONT PARK LLC
429 COURT ST. NE
SALEM, OREGON 97301

project no:25094

CD/PERMIT SET	09.26.07
BUDGET SET	02.20.07
DESIGN DEVELOPMENT	10.10.06
DESIGN REVIEW	03.15.06
PRE-APP SET	03.09.06

© 2007 sienna architecture company
THESE DRAWINGS ARE THE PROPERTY OF SIENNA ARCHITECTURE COMPANY AND ARE NOT TO BE REPRODUCED IN ANY MANNER, EXCEPT WITH THE PRIOR WRITTEN PERMISSION OF SIENNA.

Drawn By Checked By Date

Sheet Title
WALL SECTIONS

Salem Fire Dept

Sheet Scale
AS SHOWN

Sheet No.
A403

City of Salem
Bldg. & Safety Div.

P:\2005\25094\Dwgs\ACAD\CURRENT\SHEET SET\25094-A403.dwg, 9/27/2007 12:12:45 PM, pdk, DWG to PDF.pc3, 1:1

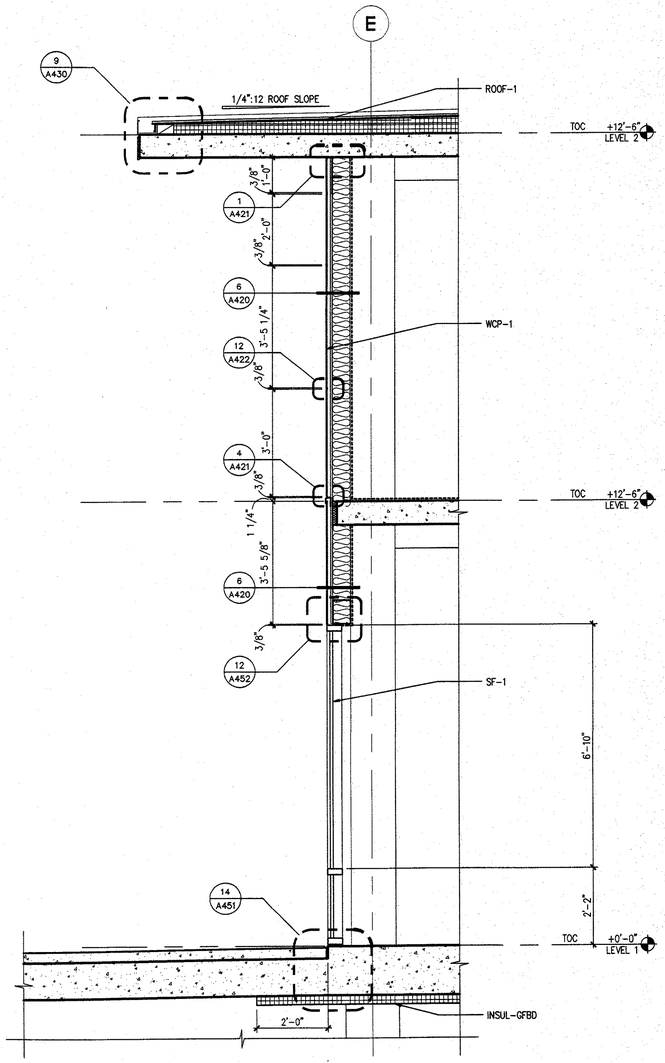

13 WALL SECTION

1/2"=1'-0"

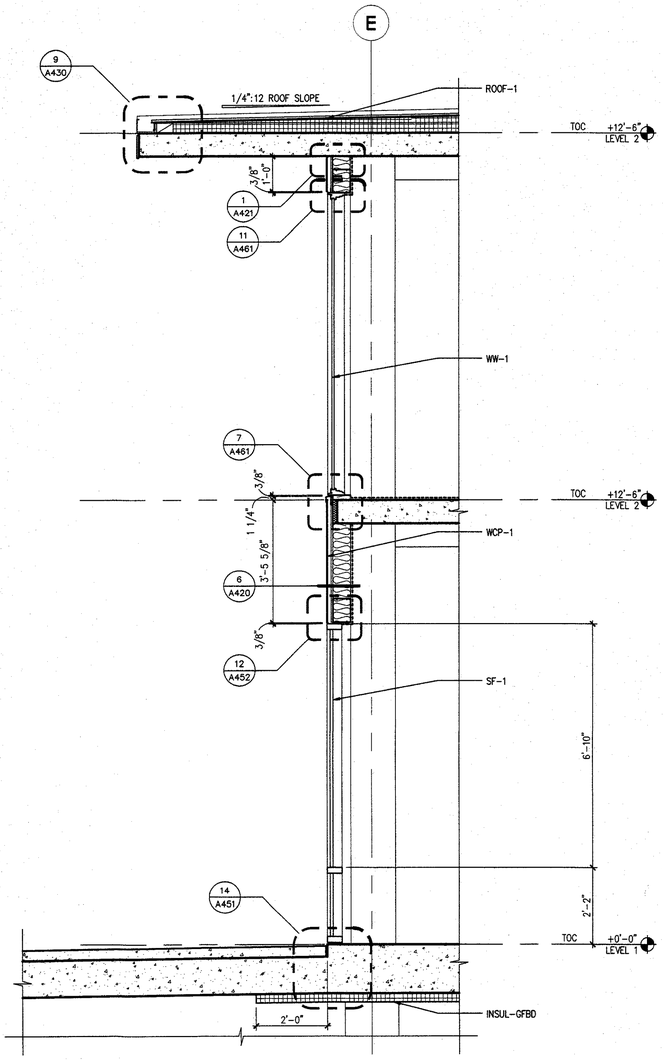

14 WALL SECTION

1/2"=1'-0"

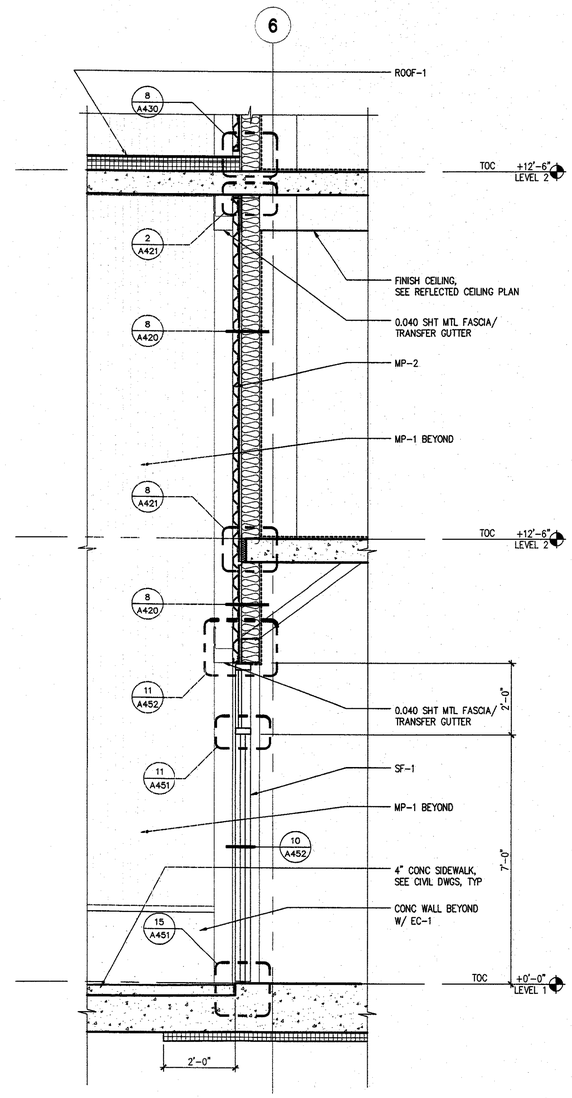

15 WALL SECTION

1/2"=1'-0"

architecture company
sienna
411 sw sixth
portland, oregon
97204.1602
503.227.5616 v
503.227.3590 f

REGISTERED ARCHITECT
LEE R. WINN
PORTLAND, OR
STATE OF OREGON

RIVERS CONDOS

156 FRONT AVENUE
SALEM, OREGON
RIVERFRONT PARK LLC
429 COURT ST. NE
SALEM, OREGON 97301

project no:25094

CD/PERMIT SET	09.26.07
BUDGET SET	02.20.07
DESIGN DEVELOPMENT	10.10.06
DESIGN REVIEW	03.15.06
PRE-APP SET	03.09.06

© 2007 sienna architecture company
THESE DRAWINGS ARE THE PROPERTY OF SIENNA ARCHITECTURE COMPANY AND ARE NOT TO BE REPRODUCED IN ANY MANNER, EXCEPT WITH THE PRIOR WRITTEN PERMISSION OF SIENNA.

Drawn By Checked By Date

Sheet Title
WALL SECTIONS

Salem Fire Dept

Sheet Scale
AS SHOWN

Sheet No.
A404

City of Salem Bldg. & Safety Div.

P:\2005\25094\Dwgs\ACAD\CURRENT\SHEET SET\25094-A404.dwg, 9/27/2007 12:11:02 PM, pdk, DWG to PDF.pc3, 1:1

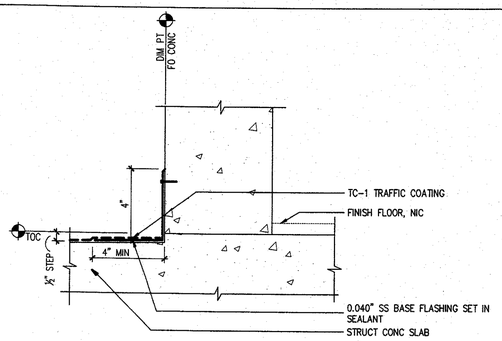

4 TOPPING SLAB AT CONC WALL

3"=1'-0" DA410-4

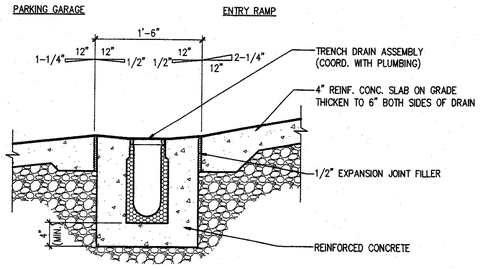

7 TRENCH DRAIN

1"=1'-0" DA410-7

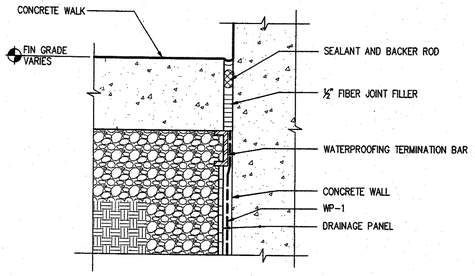

8 WALK AT CONC WALL

3"=1'-0" DA421-8

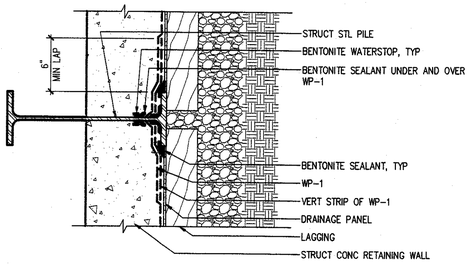

11 WATERPROOFING AT PILE

1 1/2"=1'-0" DA410-11

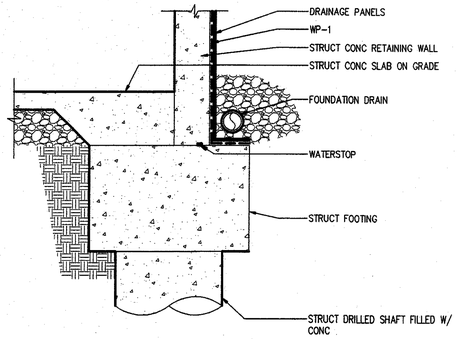

14 FOUNDATION

3/4"=1'-0" DA410-14

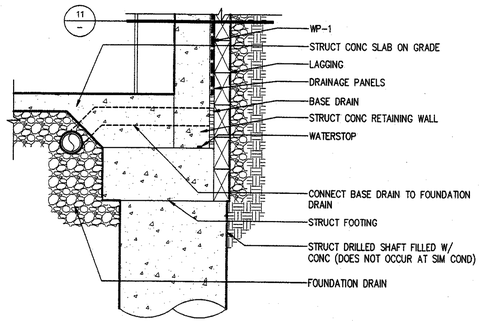

15 FOUNDATION

3/4"=1'-0" DA410-15

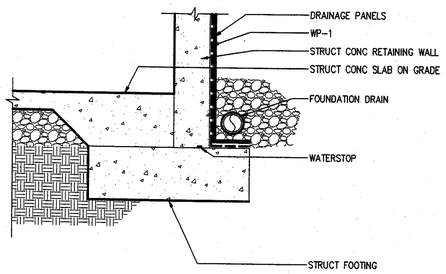

16 FOUNDATION

3/4"=1'-0" DA410-16

architecture company
sienna
411 sw sixth
portland, oregon
97204.1602
503.227.5616 v
503.227.3590 f

REGISTERED ARCHITECT
LEE R. WINN
PORTLAND, OR
STATE OF OREGON

RIVERS CONDOS

156 FRONT AVENUE
SALEM, OREGON
RIVERFRONT PARK LLC
429 COURT ST. NE
SALEM, OREGON 97301

project no:25094

CD/PERMIT SET	09.26.07
BUDGET SET	02.20.07
DESIGN DEVELOPMENT	10.10.06
DESIGN REVIEW	03.15.06
PRE-APP SET	03.09.06

© 2007 sienna architecture company
THESE DRAWINGS ARE THE PROPERTY OF SIENNA ARCHITECTURE COMPANY AND ARE NOT TO BE REPRODUCED IN ANY MANNER, EXCEPT WITH THE PRIOR WRITTEN PERMISSION OF SIENNA.

Drawn By Checked By Date

Sheet Title
FOUNDATION DETAILS

Salem Fire Dept

Sheet Scale
AS SHOWN

Sheet No.
A410

City of Salem
Bldg. & Safety Div.

P:\0005\25094\Dwgs\ACAD\CURRENT\SHEET SET\25094-A410.dwg, 9/21/2007 12:09:54 PM, pdfc, DWG to PDF.pc5, 1:1

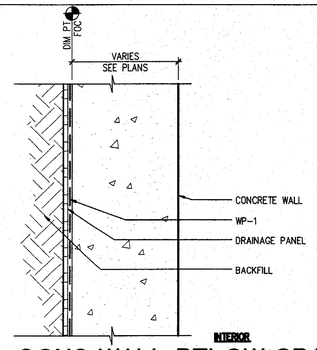

1 CONC WALL BELOW GRADE

3"=1'-0" DA420-1

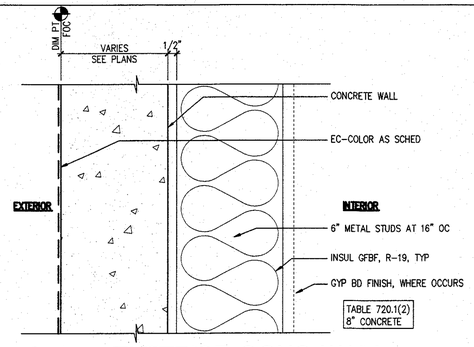

2 EXTERIOR CONC WALL

3"=1'-0" DA420-3

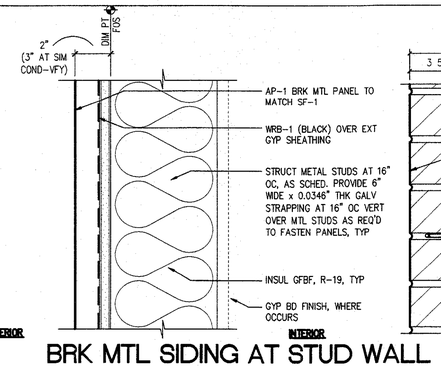

3 BRK MTL SIDING AT STUD WALL

3"=1'-0" DA420-3

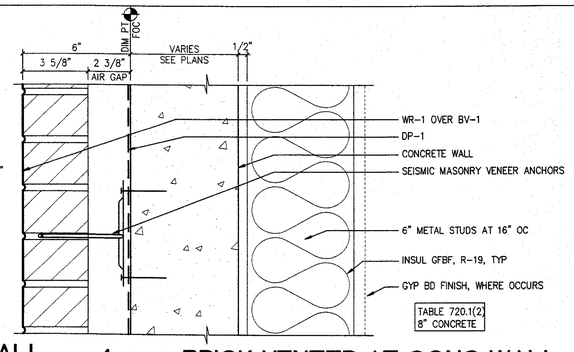

4 BRICK VENEER AT CONC WALL

3"=1'-0" DA420-4

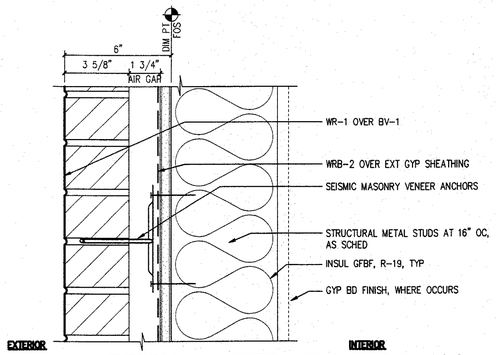

5 BRICK VENEER AT STUD WALL

3"=1'-0" DA420-5

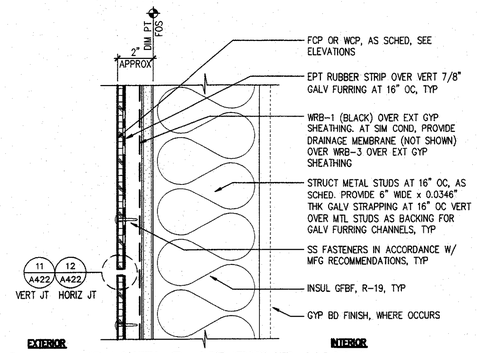

6 PANELS AT STUD WALL

3"=1'-0" DA420-6

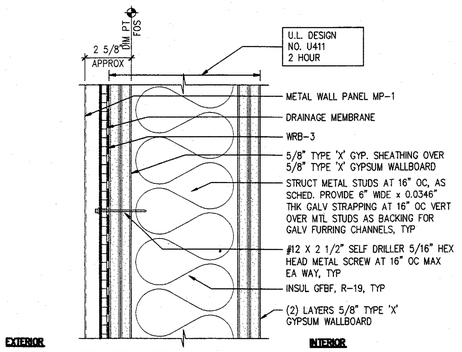

7 VERT MTL SIDING AT 2 HR WALL

3"=1'-0" DA420-7

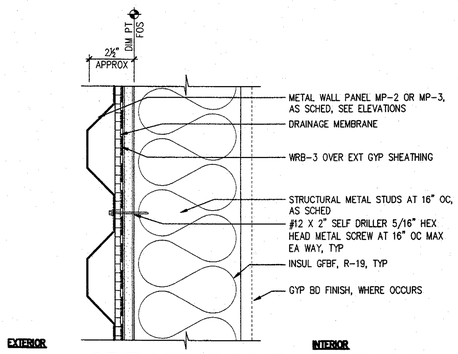

8 HORIZ MTL SIDING AT STUD WALL

3"=1'-0" DA420-8

NOTES:
1. DIMS A, B, & C SHALL BE ¼" MIN
2. JOINTS OF THIS TYPE ARE NOT PREFERRED, USE DETAIL 16/A420 WHENEVER CONDITIONS ALLOW

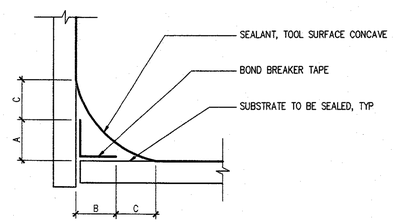

12 TYP SEALANT DETAIL

FULL SCALE DA420-12

NOTES:
1. DIM A: AS NOTED ON PLANS/DETAILS. SHALL BE ¼" MIN, 1" MAX
2. DIM B: SHALL BE ⅛" MIN, ½" MAX
3. DIM C: SHALL BE ¼" MIN
4. RATIO OF DIMS A:B SHALL BE 2:1, MIN

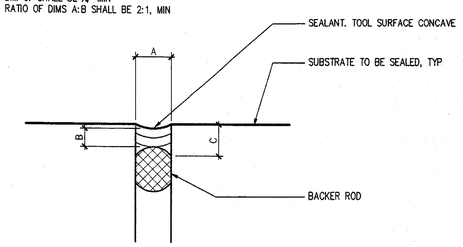

16 TYP SEALANT DETAIL

FULL SCALE DA420-16

architecture company
sienna
411 sw sixth
portland, oregon
97204.1602
503.227.5616 v
503.227.3590 f

REGISTERED ARCHITECT
LEE R. WINN
PORTLAND, OR
STATE OF OREGON

RIVERS CONDOS

156 FRONT AVENUE
SALEM, OREGON
RIVERFRONT PARK LLC
429 COURT ST. NE
SALEM, OREGON 97301

project no:25094

CD/PERMIT SET	09.26.07
BUDGET SET	02.20.07
DESIGN DEVELOPMENT	10.10.06
DESIGN REVIEW	03.15.06
PRE-APP SET	03.09.06

© 2007 sienna architecture company
THESE DRAWINGS ARE THE PROPERTY OF SIENNA ARCHITECTURE COMPANY AND ARE NOT TO BE REPRODUCED IN ANY MANNER, EXCEPT WITH THE PRIOR WRITTEN PERMISSION OF SIENNA.

Drawn By Checked By Date

Sheet Title
EXTERIOR WALL
DETAILS

Salem Fire Dept.

Sheet Scale
AS SHOWN

Sheet No.
A420

City of Salem, Bldg & Safety Div.

P:\2005\25094\Dwgs\ACAD\CURRENT\SHEET SET\25094-A420.dwg, 9/21/2007 12:08:07 PM, pdk, DWG to PDF.pc3, 1:1

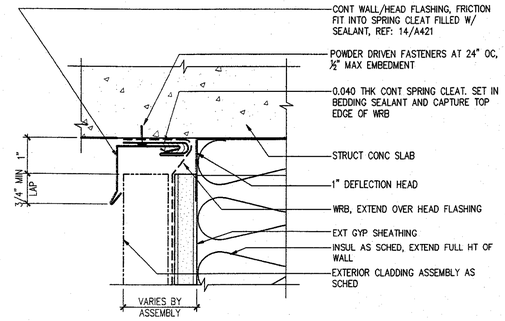

1 HEAD/WALL FLASHING

6"=1'-0" DA421-1

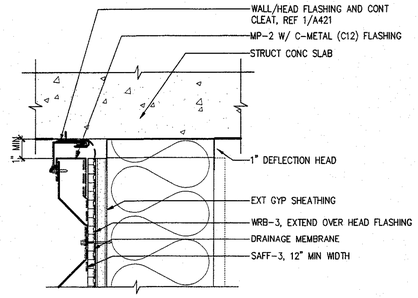

2 HEAD/WALL FLASHING

3"=1'-0" DA421-2

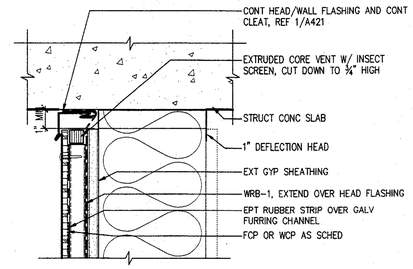

3 HEAD/WALL FLASHING

3"=1'-0" DA421-3

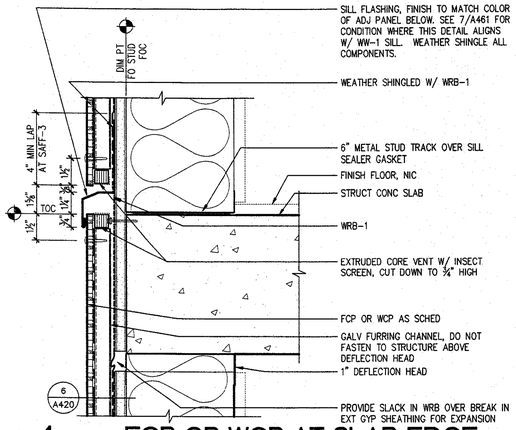

4 FCP OR WCP AT SLAB EDGE

3"=1'-0" DA421-4

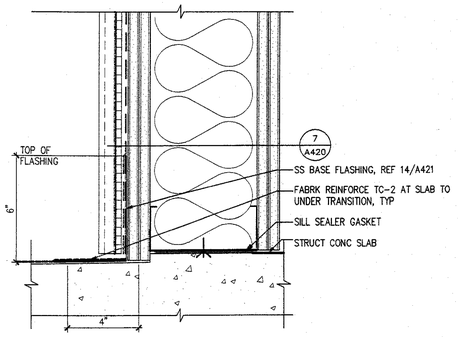

5 SILL

3"=1'-0" DA421-5

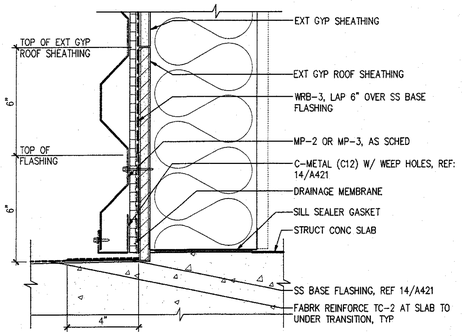

6 SILL

3"=1'-0" DA421-6

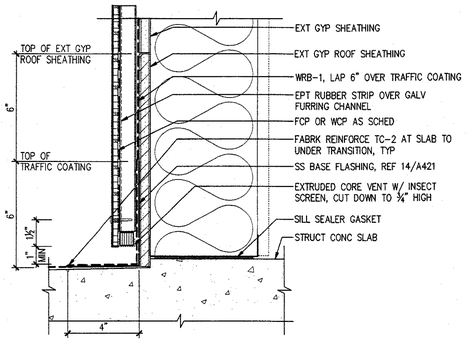

7 SILL

3"=1'-0" DA421-7

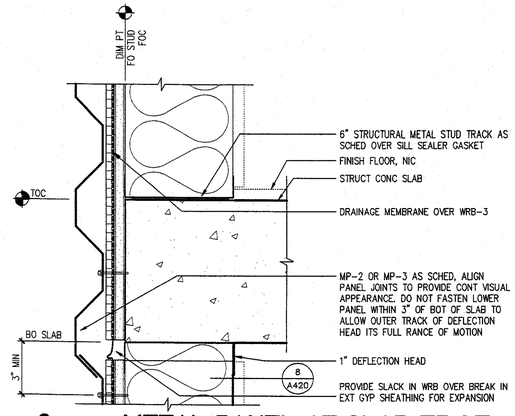

8 METAL PANEL AT SLAB EDGE

3"=1'-0" DA421-8

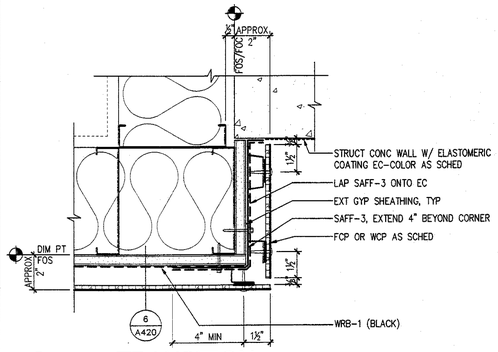

9 TRANSITION

3"=1'-0" DA421-9

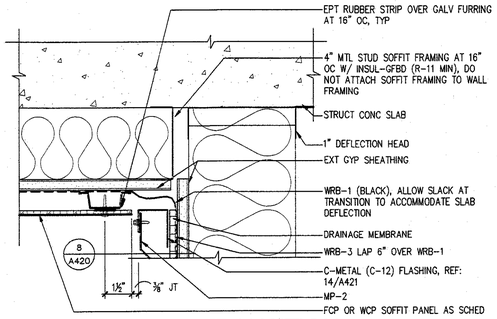

10 SOFFIT TRANSITION

3"=1'-0" DA421-10

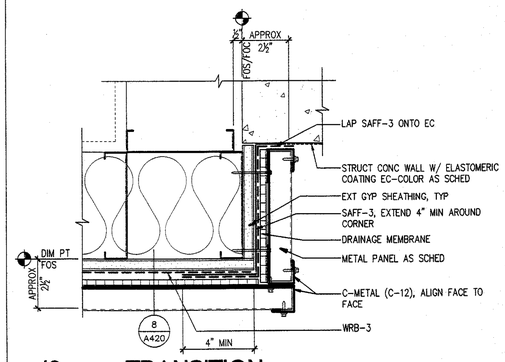

13 TRANSITION

3"=1'-0" DA421-13

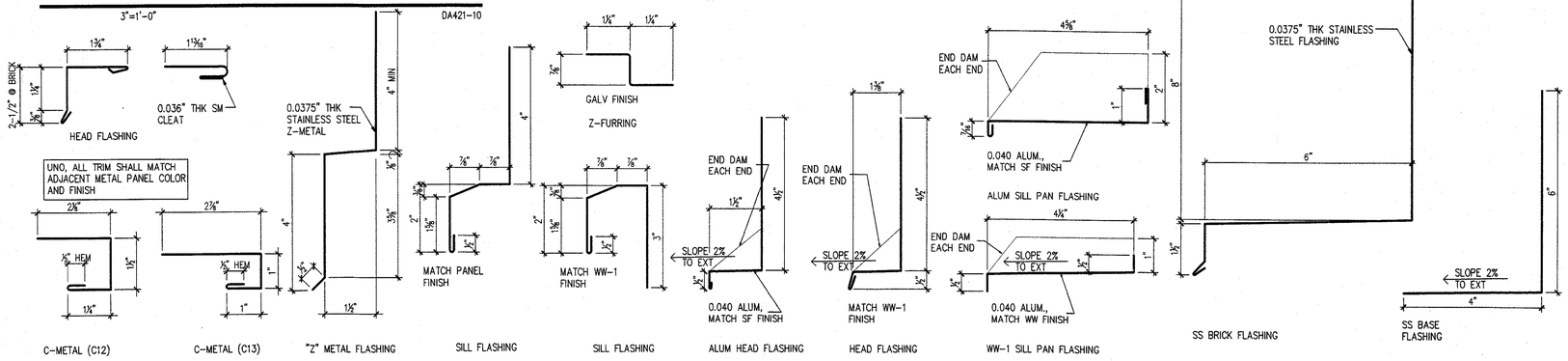

NOTES:
1. ALL FLASHINGS TO BE 0.024 PRE-FINISHED SHEET METAL U.O.N.

14 METAL TRIM SHAPES

6"=1'-0" DA421-14

architecture company
sienna
411 sw sixth
portland, oregon
97204.1602
503.227.5616 v
503.227.3590 f

REGISTERED ARCHITECT
LEE R. WINN
PORTLAND, OR
STATE OF OREGON

RIVERS CONDOS

156 FRONT AVENUE
SALEM, OREGON
RIVERFRONT PARK LLC
429 COURT ST. NE
SALEM, OREGON 97301

project no:25094

CD/PERMIT SET	09.26.07
BUDGET SET	02.20.07
DESIGN DEVELOPMENT	10.10.06
DESIGN REVIEW	03.15.06
PRE-APP SET	03.09.06

© 2007 sienna architecture company
THESE DRAWINGS ARE THE PROPERTY OF SIENNA ARCHITECTURE COMPANY AND ARE NOT TO BE REPRODUCED IN ANY MANNER, EXCEPT WITH THE PRIOR WRITTEN PERMISSION OF SIENNA.

Drawn By Checked By Date

Sheet Title
TYPICAL DETAILS
• EXTERIOR WALLS

Salem Fire Dept

Sheet Scale
AS SHOWN

Sheet No.
A421

City of Salem
Bldg. & Safety Div.

P:\2005\25094\dwgs\AC-WW\CURRENT\SHEET SET\25094-A421.dwg, 9/21/2007 12:07:43 PM, pdf, DWG to PDF.pc3, 1:1

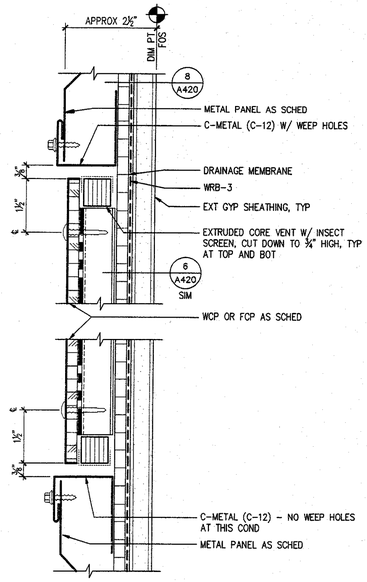

5 PANEL INSERT

6"=1'-0" DA422-5

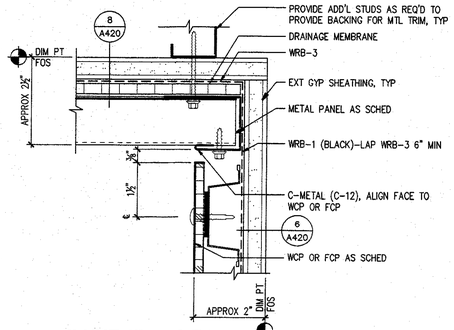

2 INSIDE CORNER

6"=1'-0" DA422-2

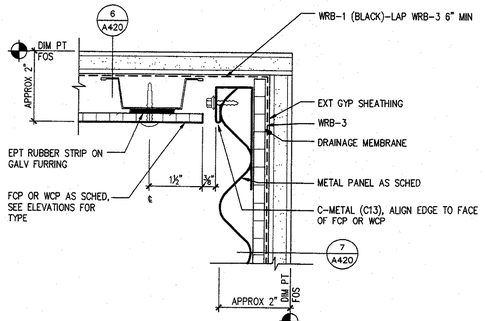

3 INSIDE CORNER

6"=1'-0" DA422-3

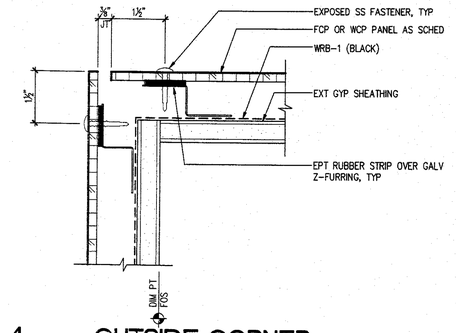

4 OUTSIDE CORNER

6"=1'-0" DA421-4

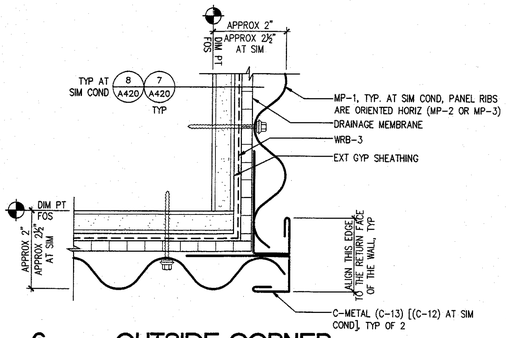

6 OUTSIDE CORNER

6"=1'-0" DA422-6

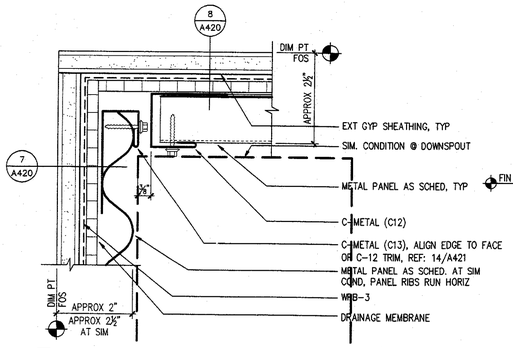

7 INSIDE CORNER

6"=1'-0" DA422-7

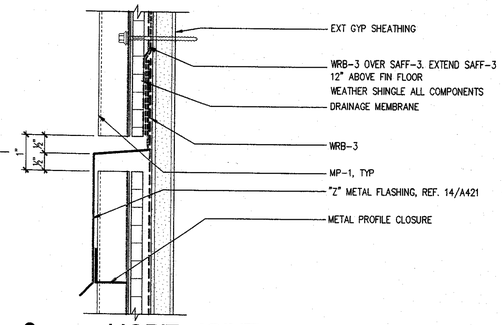

8 HORIZ JOINT

6"=1'-0" DA422-8

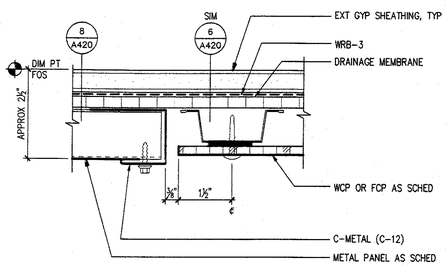

9 TRANSITION

6"=1'-0" DA422-9

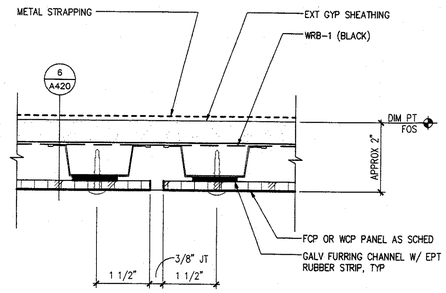

11 TYP VERT JOINT AT FCP OR WCP

6"=1'-0" 11-PROCESS

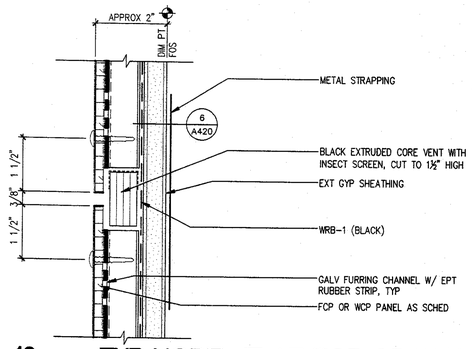

12 TYP HORIZ JT AT FCP OR WCP

6"=1'-0" 12-PROCESS

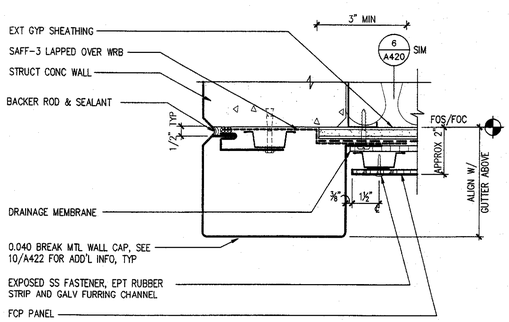

13 WALL TERMINATION

3"=1'-0" DA422-13

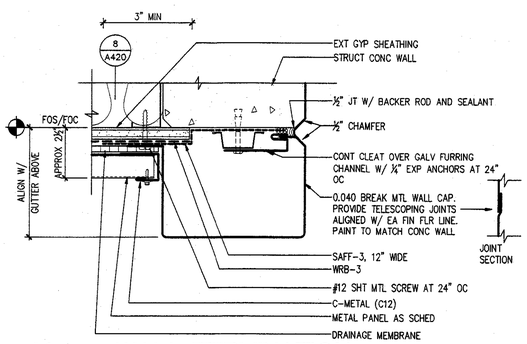

14 WALL TERMINATION

3"=1'-0" DA422-14

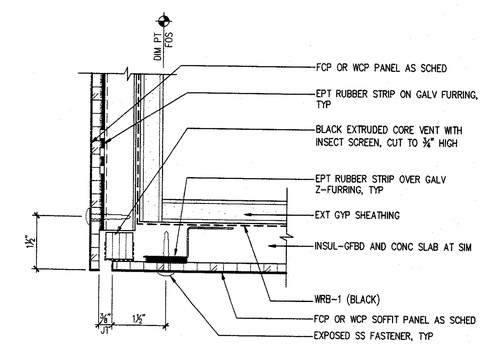

16 SOFFIT TRANSITION

6"=1'-0" DA421-16

architecture company
sienna
411 sw sixth
portland, oregon
97204.1602
503.227.5616 v
503.227.3590 f

REGISTERED ARCHITECT
LEE R. WINN
PORTLAND, OR
STATE OF OREGON

RIVERS CONDOS

156 FRONT AVENUE
SALEM, OREGON
RIVERFRONT PARK LLC
429 COURT ST. NE
SALEM, OREGON 97301
project no:25094

CD/PERMIT SET	09.26.07
BUDGET SET	02.20.07
DESIGN DEVELOPMENT	10.10.06
DESIGN REVIEW	03.15.06
PRE-APP SET	03.09.06

© 2007 sienna architecture company
THESE DRAWINGS ARE THE PROPERTY OF SIENNA ARCHITECTURE COMPANY AND ARE NOT TO BE REPRODUCED IN ANY MANNER, EXCEPT WITH THE PRIOR WRITTEN PERMISSION OF SIENNA.

Drawn By Checked By Date

Sheet Title
EXTERIOR
DETAILS

Salem Fire Dept

Sheet Scale
AS SHOWN

Sheet No.
A422

City of Salem
Bldg. & Safety Div

P:\2005\25094\Dwgs\AC AD\CURRENT\SHEET SET\25094-A422.dwg, 9/21/2007 12:01:19 PM, pdk, DWG to PDF.pc3, 1:1

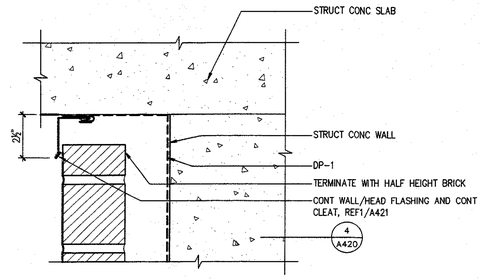

2 WALL/HEAD AT BRICK

3"=1'-0" DA423-2

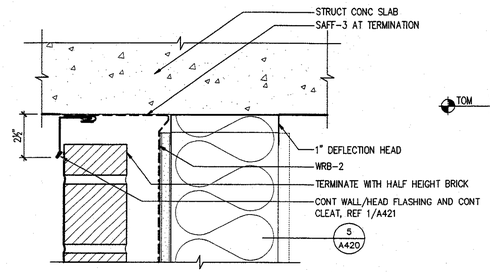

3 HEAD

3"=1'-0" DA423-3

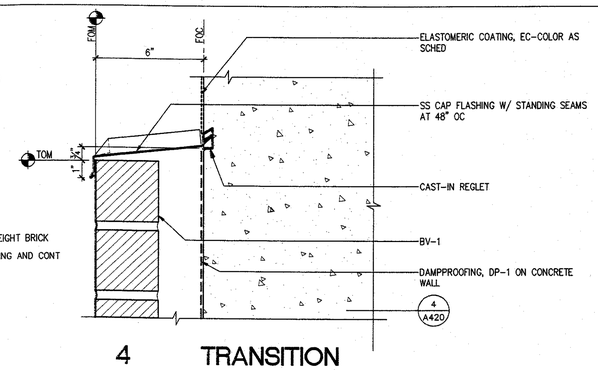

4 TRANSITION

3"=1'-0" DA423-4

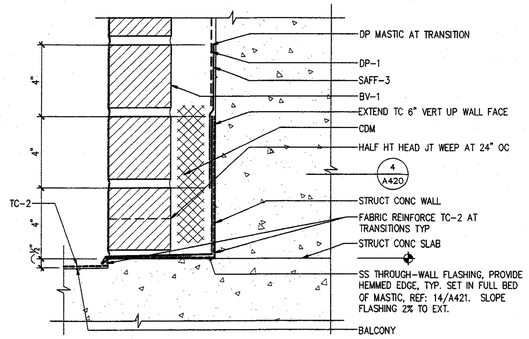

6 SILL

3"=1'-0" DA423-6

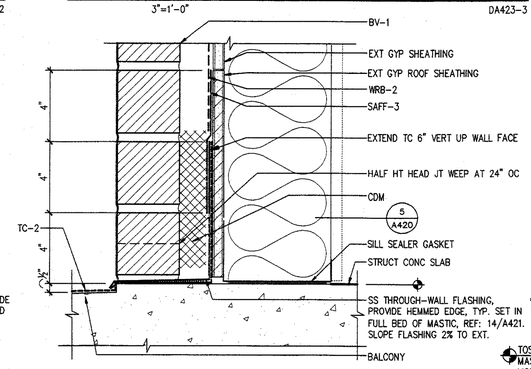

7 SILL

3"=1'-0" DA423-7

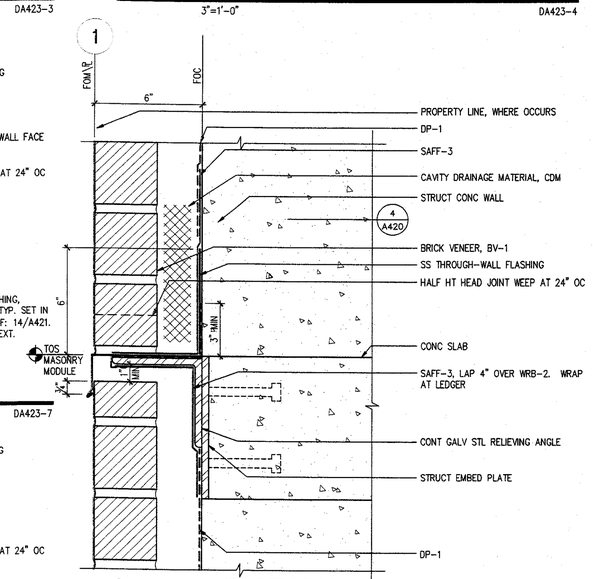

12 TYP SECTION AT SLAB EDGE

3"=1'-0" DA423-12

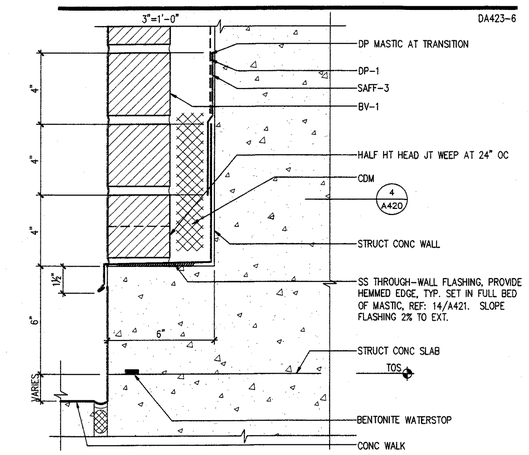

10 SILL

3"=1'-0" DA423-10

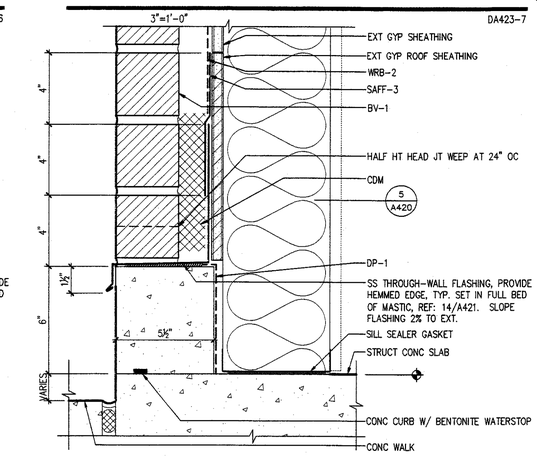

11 SILL

3"=1'-0" DA423-11

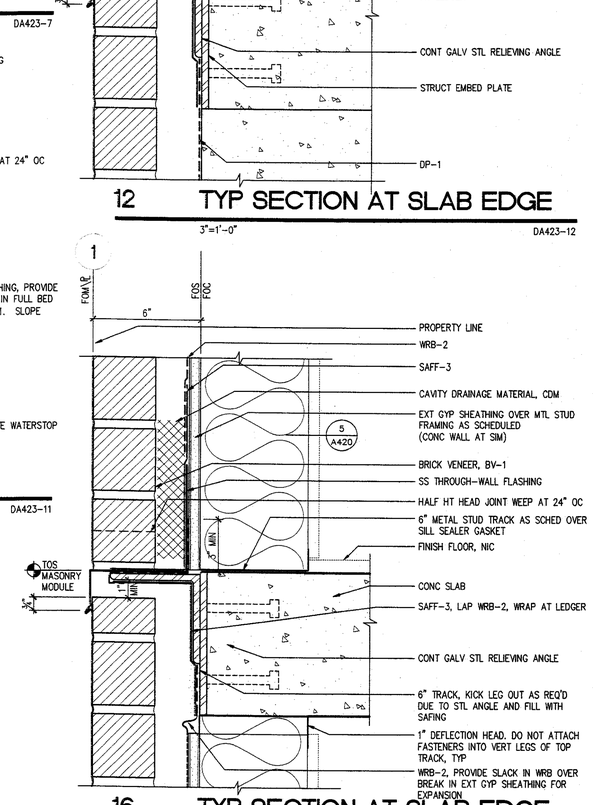

16 TYP SECTION AT SLAB EDGE

3"=1'-0" DA421-16

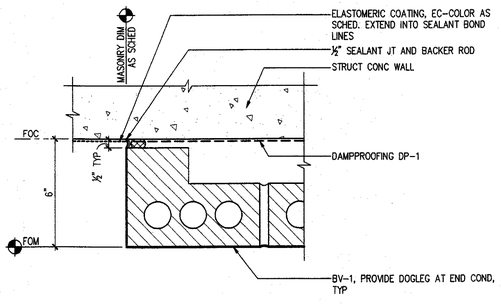

13 TRANSITION

3"=1'-0" DA423-13

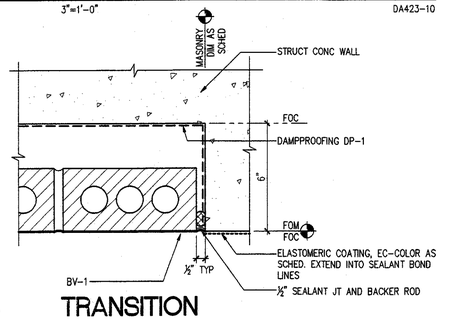

14 TRANSITION

3"=1'-0" DA423-14

architecture company
sienna
411 sw sixth
portland, oregon
97204.1602
503.227.5616 v
503.227.3590 f

REGISTERED ARCHITECT
LEE R. WINN
PORTLAND, OR
STATE OF OREGON

RIVERS CONDOS

156 FRONT AVENUE
SALEM, OREGON
RIVERFRONT PARK LLC
429 COURT ST. NE
SALEM, OREGON 97301

project no:25094

CD/PERMIT SET	09.26.07
BUDGET SET	02.20.07
DESIGN DEVELOPMENT	10.10.06
DESIGN REVIEW	03.15.06
PRE-APP SET	03.09.06

© 2007 sienna architecture company
THESE DRAWINGS ARE THE PROPERTY OF SIENNA ARCHITECTURE COMPANY AND ARE NOT TO BE REPRODUCED IN ANY MANNER, EXCEPT WITH THE PRIOR WRITTEN PERMISSION OF SIENNA.

Drawn By Checked By Date

Sheet Title
BRICK VENEER

DETAILS

Salem Fire Dept

Sheet Scale
AS SHOWN

Sheet No.
A423

City of Salem
Bldg. & Safety Div.

P:\2025\25094\Dwgs\AC AD\CURRENT\SHEET SET\25094-A423.dwg, 9/21/2007 12:06:55 PM, pdk, DWG to PDF.pc3, 1:1

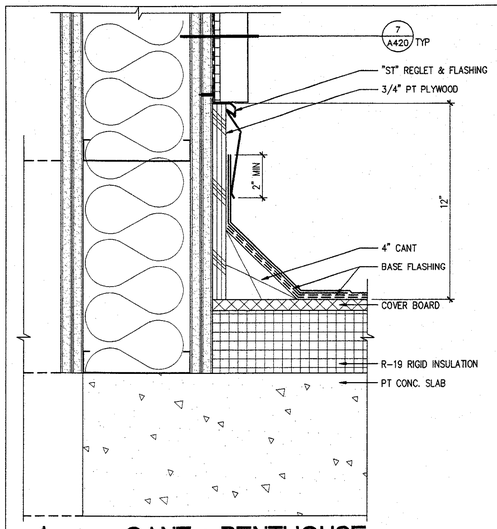

1 CANT @ PENTHOUSE

3"=1'-0" DA430-1

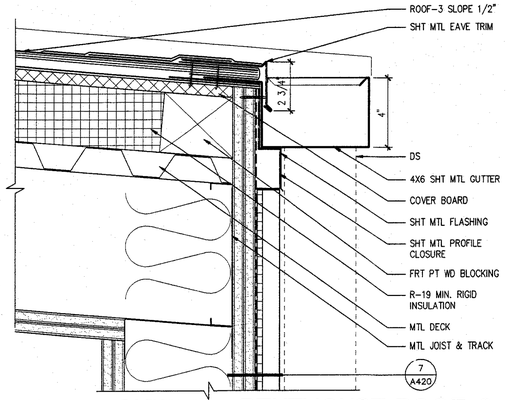

2 GUTTER @ PENTHOUSE ROOF-3

3"=1'-0" DA430-2

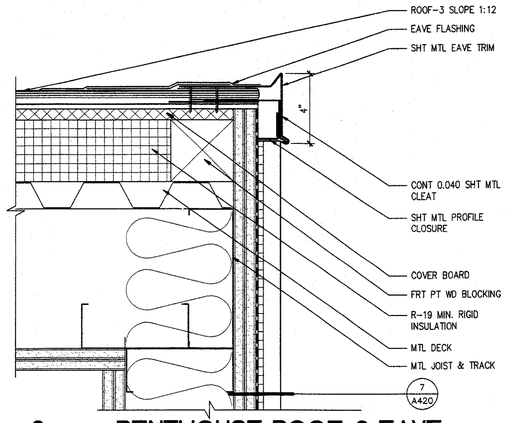

3 PENTHOUSE ROOF-3 EAVE

3"=1'-0" DA430-3

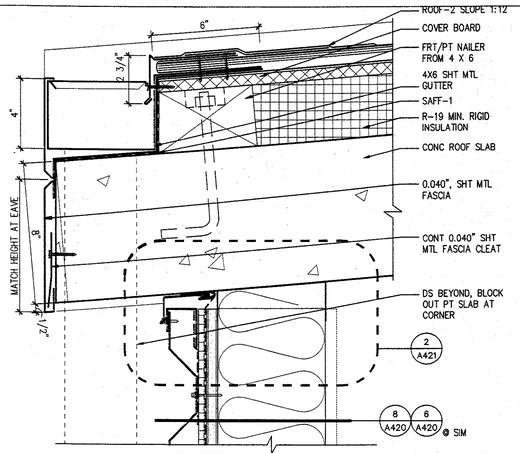

4 TYP. DETAIL @ ROOF-2 GUTTER

3"=1'-0" DA430-4

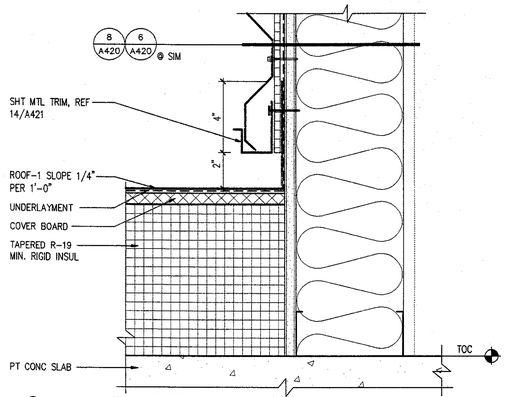

8 ROOF-1 @ STUD WALL

3"=1'-0" DA430-8

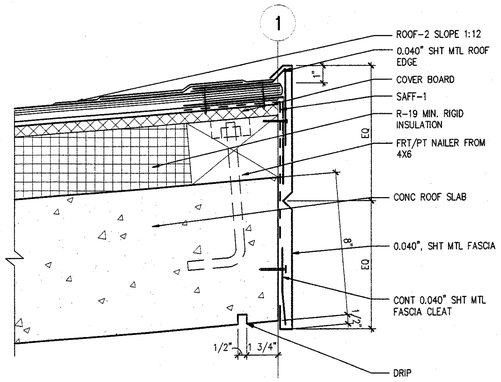

5 SECTION @ HIGH EAVE ROOF-2

3"=1'-0" DA430-5

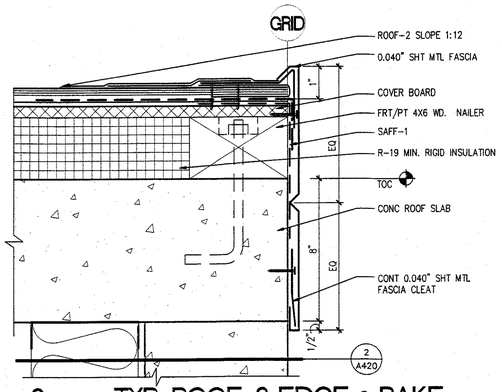

6 TYP. ROOF-2 EDGE @ RAKE

3"=1'-0" DA430-6

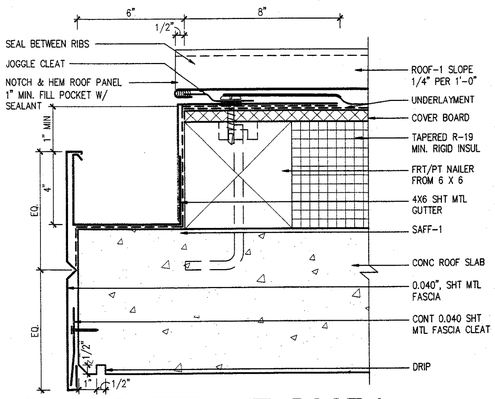

9 GUTTER @ MTL ROOF-1

3"=1'-0" DA430-9

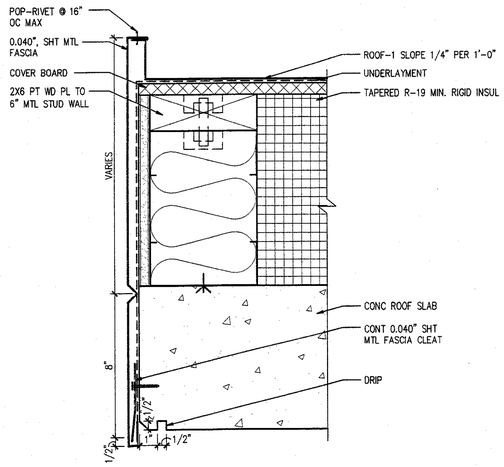

10 ROOF-1 EDGE (NEAR GRID 9)

3"=1'-0" DA430-10

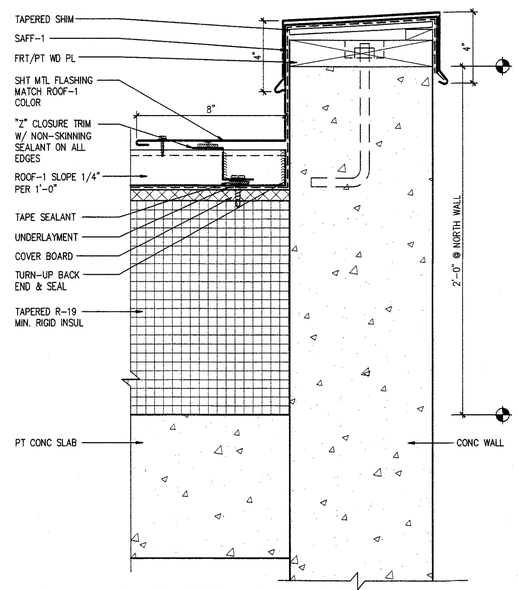

11 PARAPET @ MTL ROOF-1

3"=1'-0" DA430-11

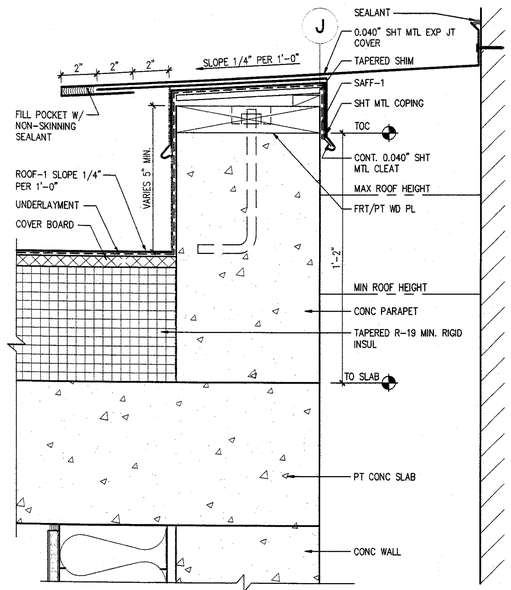

12 PARAPET @ FIRST FLR ROOF-1

3"=1'-0" DA430-12

architecture company
sienna
411 sw sixth
portland, oregon
97204.1602
503.227.5616 v
503.227.3590 f

REGISTERED ARCHITECT
LEE R. WINN
PORTLAND, OR
STATE OF OREGON

RIVERS CONDOS

156 FRONT AVENUE
SALEM, OREGON
RIVERFRONT PARK LLC
429 COURT ST. NE
SALEM, OREGON 97301

project no:25094

CD/PERMIT SET	09.26.07
BUDGET SET	02.20.07
DESIGN DEVELOPMENT	10.10.06
DESIGN REVIEW	03.15.06
PRE-APP SET	03.09.06

© 2007 sienna architecture company
THESE DRAWINGS ARE THE PROPERTY OF SIENNA ARCHITECTURE COMPANY AND ARE NOT TO BE REPRODUCED IN ANY MANNER, EXCEPT WITH THE PRIOR WRITTEN PERMISSION OF SIENNA.

Drawn By Checked By Date

Sheet Title
ROOF DETAILS

Salem Fire Dept

Sheet Scale
3"=1'-0"

Sheet No.
A430

City of Salem
Bldg. & Safety Div.

P:\2005\25094\Dwgs\ACADV\CURRENT\SHEET SET\A-A430.dwg, 9/27/2007 12:15:22 PM, pdf, DWG to PDF.pc3, 1:1

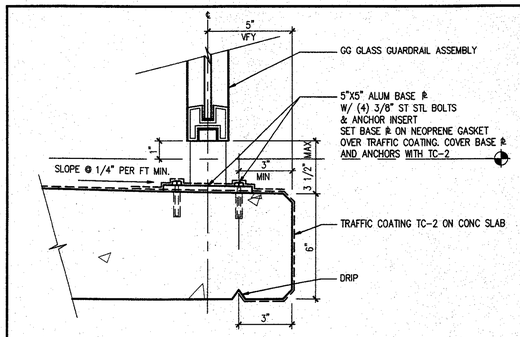

1 TYP. DETAIL @ DECK EDGE

3"=1'-0" DA431-1

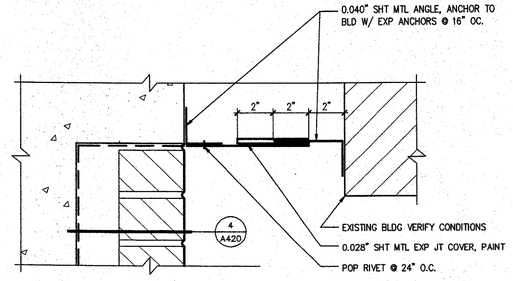

4 WALL EXP JT (EAST JT SIM.)

3"=1'-0" DA431-4

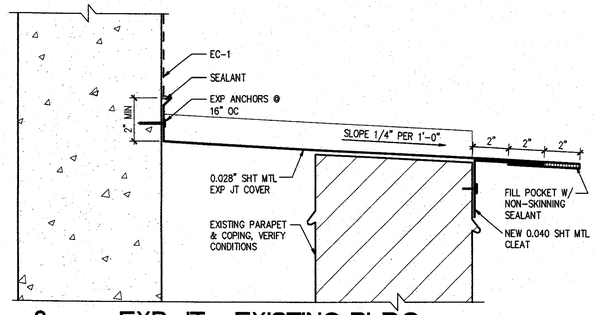

8 EXP JT @ EXISTING BLDG

3"=1'-0" DA430-8

architecture company
sienna
411 sw sixth
portland, oregon
97204.1602
503.227.5616 v
503.227.3590 f

REGISTERED ARCHITECT
LEE R. WINN
PORTLAND, OR
STATE OF OREGON

RIVERS CONDOS

156 FRONT AVENUE
SALEM, OREGON
RIVERFRONT PARK LLC
429 COURT ST. NE
SALEM, OREGON 97301

project no:25094

CD/PERMIT SET	09.28.07
BUDGET SET	02.20.07
DESIGN DEVELOPMENT	10.10.06
DESIGN REVIEW	03.15.06
PRE-APP SET	03.09.06

© 2007 sienna architecture company
THESE DRAWINGS ARE THE PROPERTY OF SIENNA ARCHITECTURE COMPANY AND ARE NOT TO BE REPRODUCED IN ANY MANNER, EXCEPT WITH THE PRIOR WRITTEN PERMISSION OF SIENNA.

Drawn By Checked By Date

Sheet Title
ROOF DETAILS

Salem Fire Dept

Sheet Scale
3"=1'-0"

Sheet No.
A431

City of Salem
Bldg. & Safety Div

P:\2005\25094\Dwgs\ACAD\CURRENT\SHEET SET\25094-A431.dwg, 9/27/2007 12:19:07 PM, pdk, DWG to PDF.pc3, 1:1

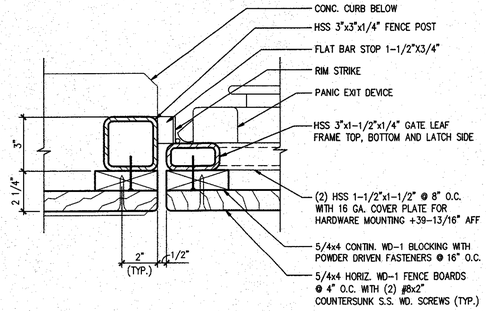

2 GATE LATCH POST

3"=1'-0" DA440-2

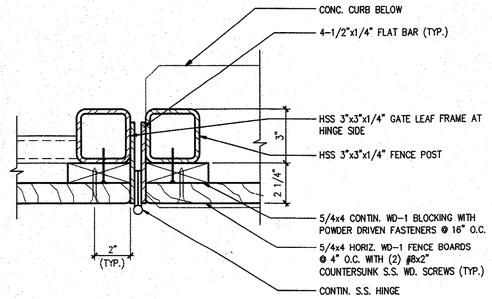

3 GATE HINGE POST

3"=1'-0" DA440-3

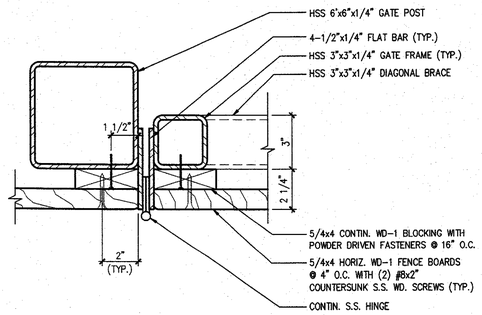

4 TRASH/RECYCLING GATE POST

3"=1'-0" DA440-4

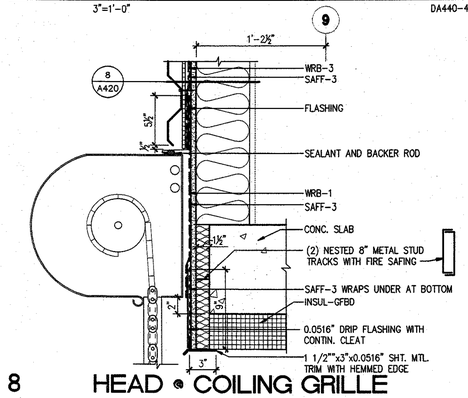

8 HEAD @ COILING GRILLE

1 1/2"=1'-0" DA440-8

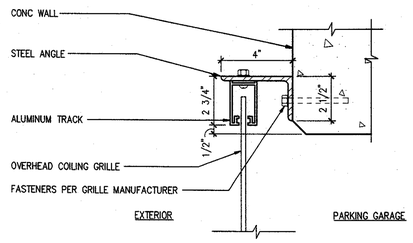

12 JAMB @ COILING GRILLE

3"=1'-0" DA440-12

architecture company
sienna
411 sw sixth
portland, oregon
97204.1602
503.227.5616 v
503.227.3590 f

REGISTERED ARCHITECT
LEE R. WINN
PORTLAND, OR
STATE OF OREGON

RIVERS CONDOS

156 FRONT AVENUE
SALEM, OREGON
RIVERFRONT PARK LLC
429 COURT ST. NE
SALEM, OREGON 97301

project no:25094

CD/PERMIT SET	09.26.07
BUDGET SET	02.20.07
DESIGN DEVELOPMENT	10.10.06
DESIGN REVIEW	03.15.06
PRE-APP SET	03.09.06

© 2007 sienna architecture company
THESE DRAWINGS ARE THE PROPERTY OF SIENNA ARCHITECTURE COMPANY AND ARE NOT TO BE REPRODUCED IN ANY MANNER, EXCEPT WITH THE PRIOR WRITTEN PERMISSION OF SIENNA.

Drawn By Checked By Date

Sheet Title
DOOR DETAILS

Salem Fire Dept

Sheet Scale
3"=1'-0"

Sheet No.
A440

City of Salem
Bldg. & Safety Div.

P:\2005\25094\Dwgs\ACAD\CURRENT\SHEET SET\25094-A440.dwg, 9/27/2007 12:18:15 PM, pdk, DWG to PDF.pc3, 1:1

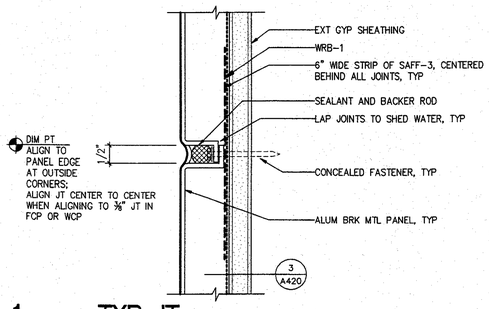

1 TYP JT

6"=1'-0" DA451-1

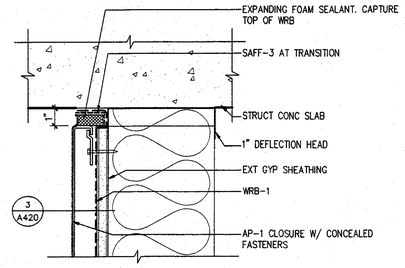

2 AP-1 HEAD

3"=1'-0" DA451-2

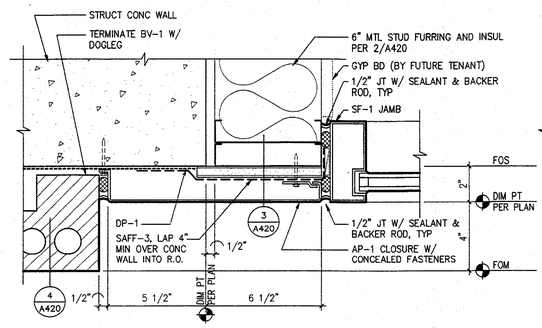

3 SF JAMB

3"=1'-0" DA451-3

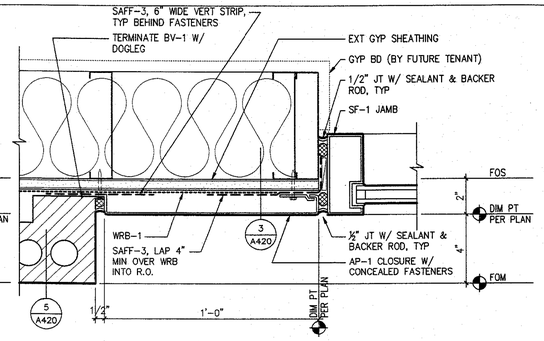

4 SF JAMB

3"=1'-0" DA451-4

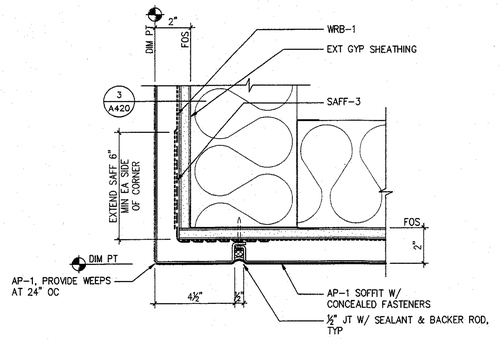

6 AP-1 TRANSITION

3"=1'-0" DA451-6

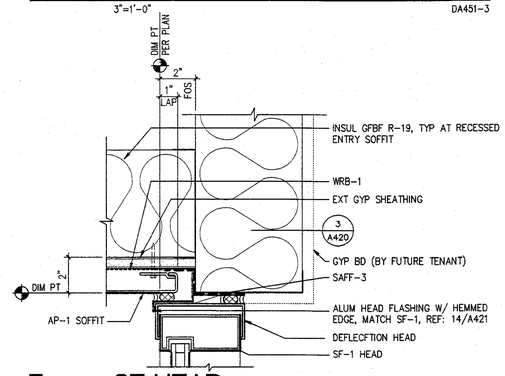

7 SF HEAD

3"=1'-0" DA451-7

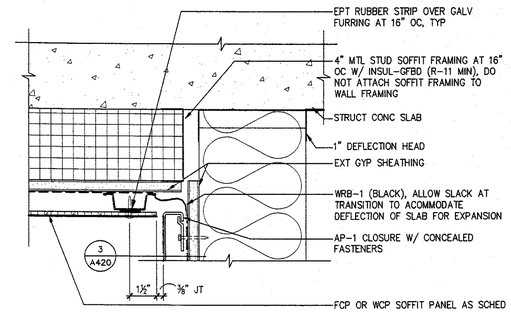

8 AP-1 TO SOFFIT TRANSITION

3"=1'-0" DA451-8

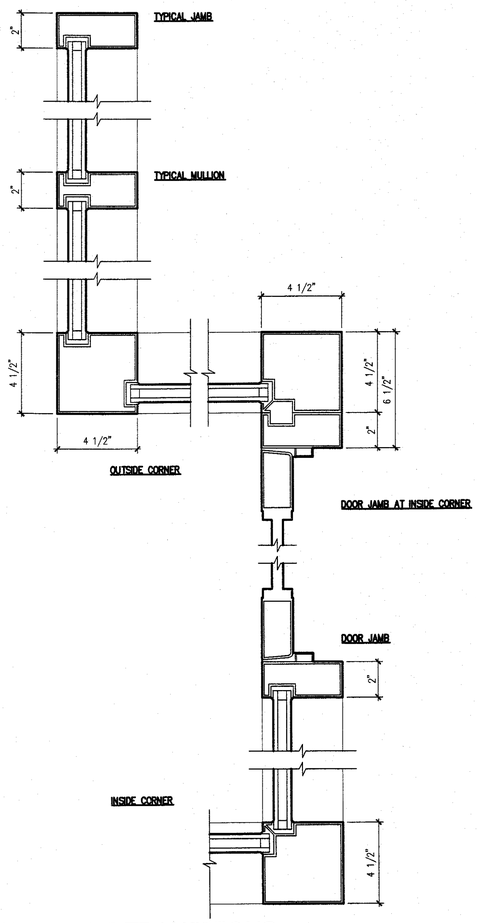

13 SF TRANSITIONS

3"=1'-0" DA451-13

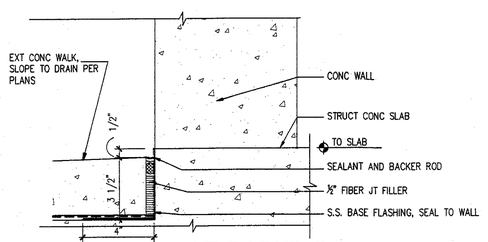

10 WALL AT PARKING

3"=1'-0" DA-451-10

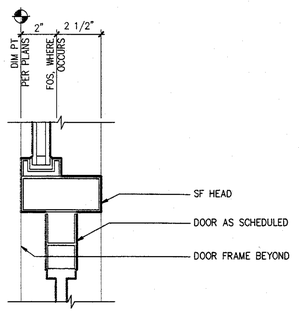

11 SF DOOR HEAD

3"=1'-0" DA451-11

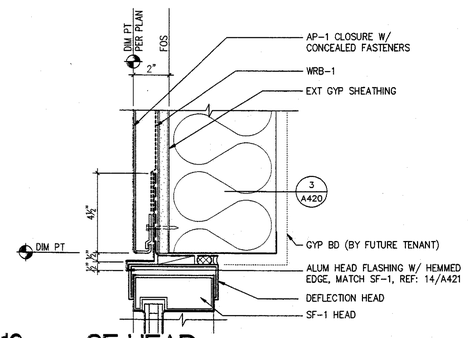

12 SF HEAD

3"=1'-0" DA451-12

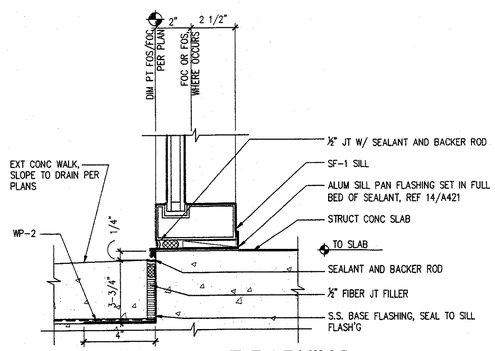

14 SF SILL AT PARKING

3"=1'-0" DA451-14

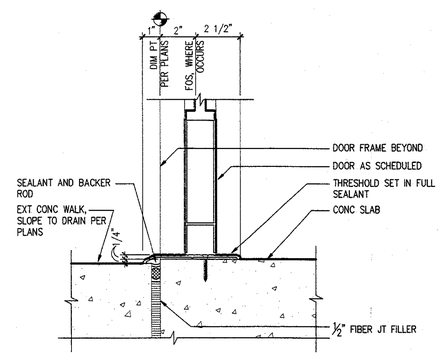

15 SF DOOR THRESHOLD

3"=1'-0" DA451-15

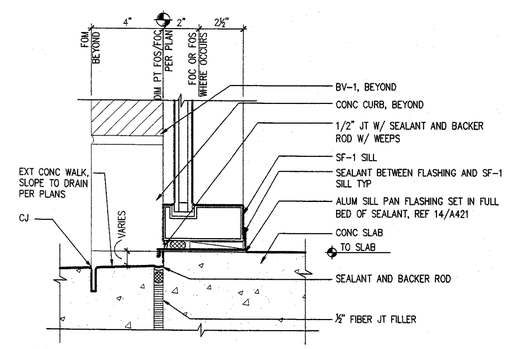

16 SF SILL AT CONC WALK

3"=1'-0" DA451-16

architecture company
sienna
411 sw sixth
portland, oregon
97204.1602
503.227.5616 v
503.227.3590 f

REGISTERED ARCHITECT
LEE R. WINN
PORTLAND, OR
STATE OF OREGON

RIVERS CONDOS

156 FRONT AVENUE
SALEM, OREGON
RIVERFRONT PARK LLC
429 COURT ST. NE
SALEM, OREGON 97301

project no:25094

CD/PERMIT SET	09.26.07
BUDGET SET	02.20.07
DESIGN DEVELOPMENT	10.10.06
DESIGN REVIEW	06.15.06
PRE-APP SET	03.09.06

© 2007 sienna architecture company
THESE DRAWINGS ARE THE PROPERTY OF SIENNA ARCHITECTURE COMPANY AND ARE NOT TO BE REPRODUCED IN ANY MANNER, EXCEPT WITH THE PRIOR WRITTEN PERMISSION OF SIENNA.

Drawn By Checked By Date

Sheet Title
STOREFRONT DETAILS

Salem Fire Dept

Sheet Scale
AS SHOWN

Sheet No.
A451

City of Salem
Bldg. & Safety Div.

P:\2005\25094\Dwgs\ACAD\CURRENT\SHEET SET\25094-A451.dwg, 9/7//2007 12:16:11 PM, pdk, DWG to PDF.pc3, 1:1

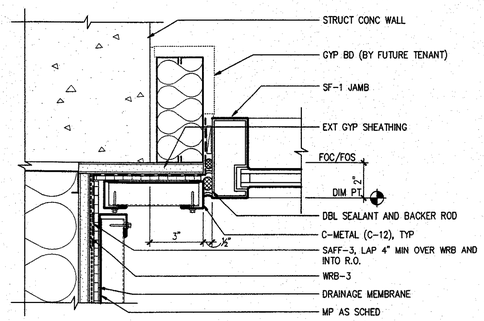

1 JAMB AT MP

3"=1'-0" DA452-1

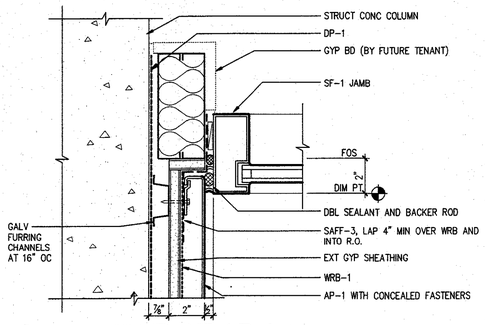

2 JAMB AT AP-1

3"=1'-0" DA452-2

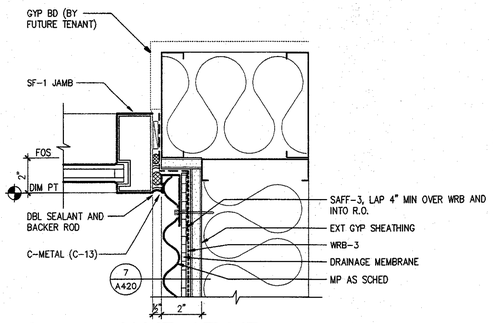

3 JAMB AT MP

3"=1'-0" DA452-3

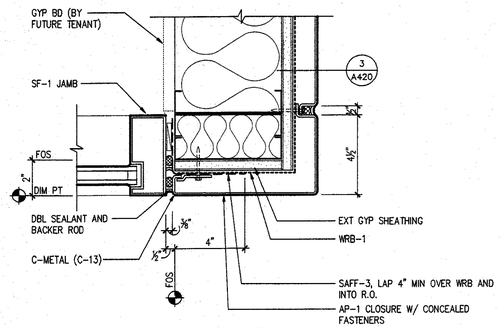

6 JAMB AT AP-1

3"=1'-0" DA452-6

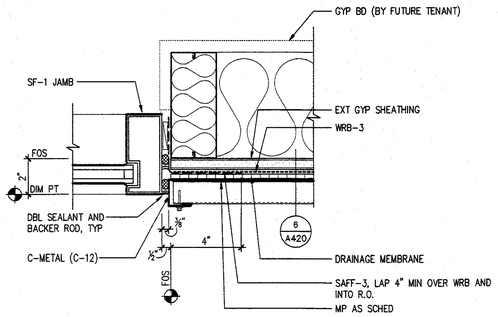

7 JAMB AT MP

3"=1'-0" DA452-7

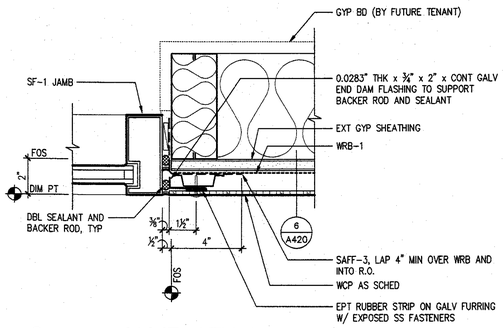

8 JAMB AT WCP

3"=1'-0" DA452-8

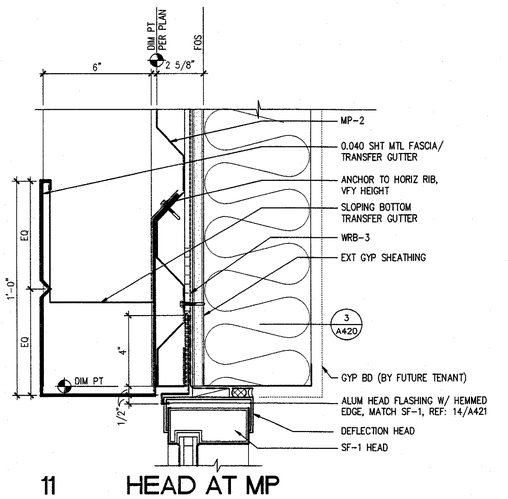

11 HEAD AT MP

3"=1'-0" DA452-11

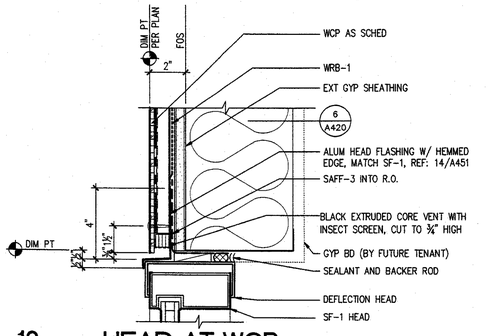

12 HEAD AT WCP

3"=1'-0" DA452-12

architecture company
sienna
411 sw sixth
portland, oregon
97204.1602
503.227.5616 v
503.227.3590 f

RIVERS CONDOS

156 FRONT AVENUE
SALEM, OREGON
RIVERFRONT PARK LLC
429 COURT ST. NE
SALEM, OREGON 97301

project no:25094

CD/PERMIT SET	09.26.07
BUDGET SET	02.20.07
DESIGN DEVELOPMENT	10.10.06
DESIGN REVIEW	06.15.06
PRE-APP SET	03.09.06

© 2007 sienna architecture company
THESE DRAWINGS ARE THE PROPERTY OF SIENNA ARCHITECTURE COMPANY AND ARE NOT TO BE REPRODUCED IN ANY MANNER, EXCEPT WITH THE PRIOR WRITTEN PERMISSION OF SIENNA.

Drawn By Checked By Date

Sheet Title
STOREFRONT DETAILS

Salem Fire Dept.

Sheet Scale
AS SHOWN

Sheet No.
A452

City of Salem Bldg. & Safety Div.

P:\2006\25094\Drawings\ACAD\CURRENT\SHEET SET\25094-A452.dwg, 9/21/2007 12:16:51 PM, pdf, DWG to PDF.pc3, 1:1

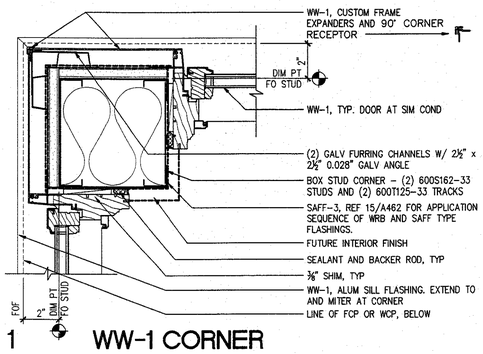

1 WW-1 CORNER

3"=1'-0" DA461-1

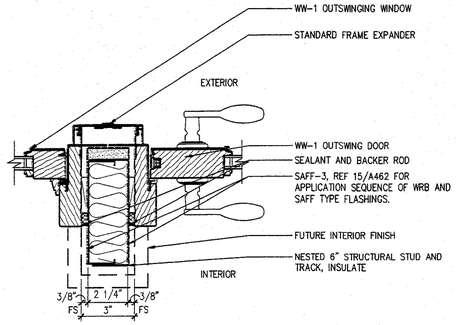

2 TYP MULL @ WW-1 DOOR + WW-1

3"=1'-0" DA461-2

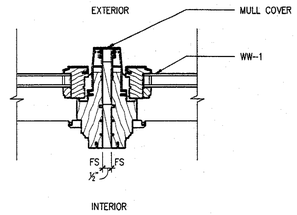

3 TYP MULL AT WW-1

3"=1'-0" DA461-3

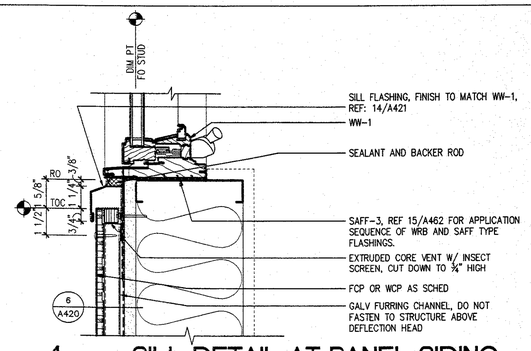

4 SILL DETAIL AT PANEL SIDING

3"=1'-0" DA461-4

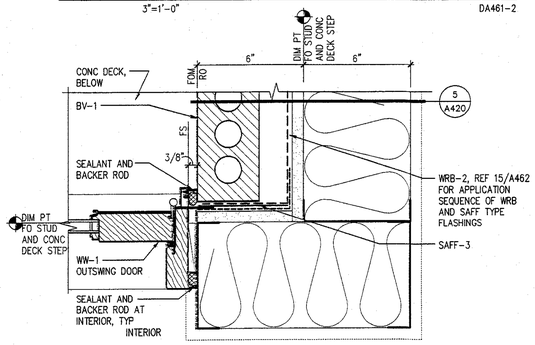

6 WW-1 CORNER @ DECK DOOR

3"=1'-0" DA461-6

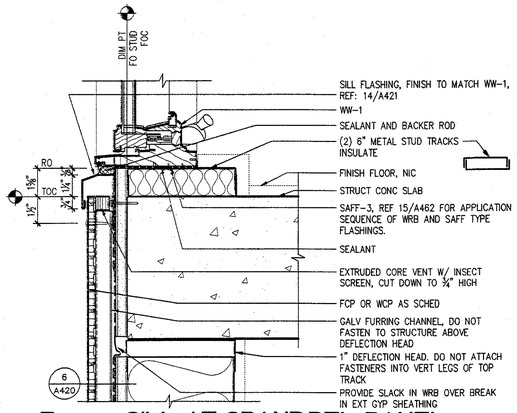

7 SILL AT SPANDREL PANEL

3"=1'-0" DA461-7

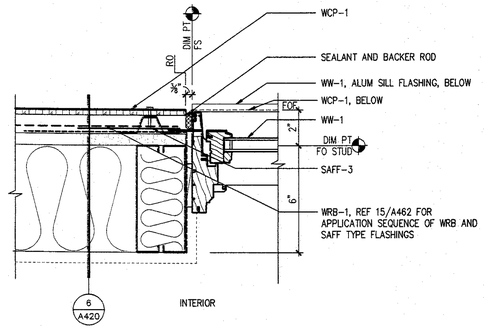

8 JAMB AT PANEL SIDING

3"=1'-0" DA461-8

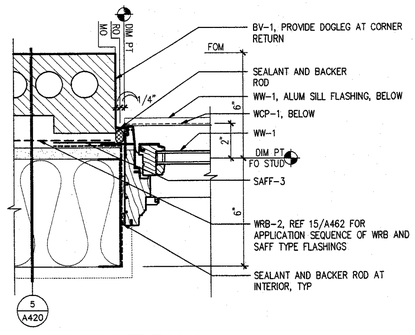

13 JAMB AT BV-1

3"=1'-0" DA461-13

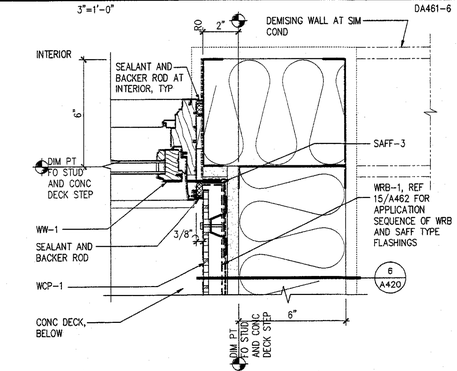

10 WW-1 CORNER @ WCP-1

3"=1'-0" DA461-10

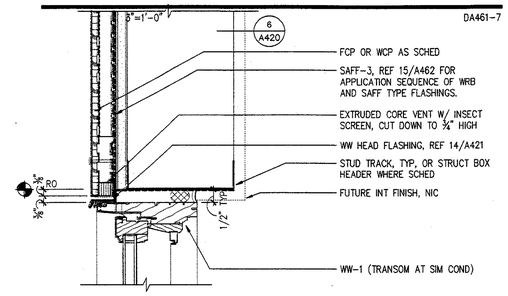

11 TYP WW-1 HEAD

3"=1'-0" DA461-11

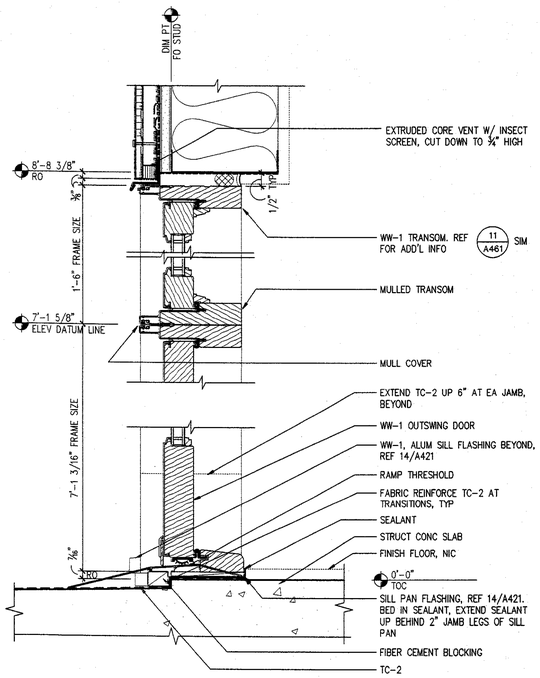

16 TYP WW-1 DOOR AT CONC DECK

3"=1'-0" DA461-16

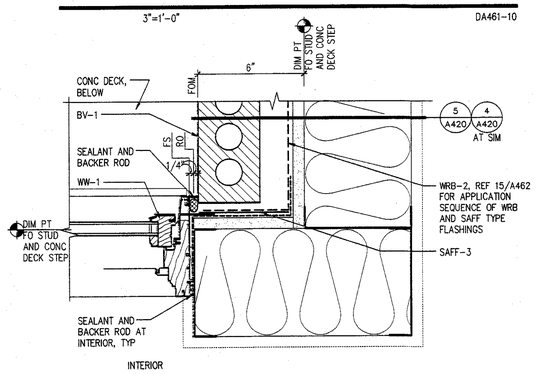

14 WW-1 CORNER @ BV-1

3"=1'-0" DA461-14

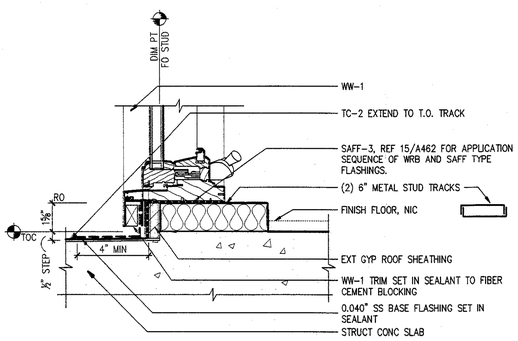

15 TYP WW-1 SILL AT CONC DECK

3"=1'-0" DA461-15

architecture company
sienna
411 sw sixth
portland, oregon
97204.1602
503.227.5616 v
503.227.3590 f

REGISTERED ARCHITECT
LEE R. WINN
PORTLAND, OR
STATE OF OREGON

RIVERS CONDOS

156 FRONT AVENUE
SALEM, OREGON
RIVERFRONT PARK LLC
429 COURT ST. NE
SALEM, OREGON 97301

project no:25094

CD/PERMIT SET	09.26.07
BUDGET SET	02.20.07
DESIGN DEVELOPMENT	10.10.06
DESIGN REVIEW	03.15.06
PRE-APP SET	03.09.06

© 2007 sienna architecture company
THESE DRAWINGS ARE THE PROPERTY OF SIENNA ARCHITECTURE COMPANY AND ARE NOT TO BE REPRODUCED IN ANY MANNER, EXCEPT WITH THE PRIOR WRITTEN PERMISSION OF SIENNA.

Drawn By Checked By Date

Sheet Title
WINDOW AND DOOR DETAILS

Salem Fire Dept

Sheet Scale
AS SHOWN

Sheet No.
A461

City of Salem Bldg. & Safety Div.

P:\2005\25094\Dwgs\ACAD\CURRENT\SHEET SET\25094-A461.dwg, 9/27/2007 12:16:58 PM, psik, DWG to PDF.pc3, 1:1

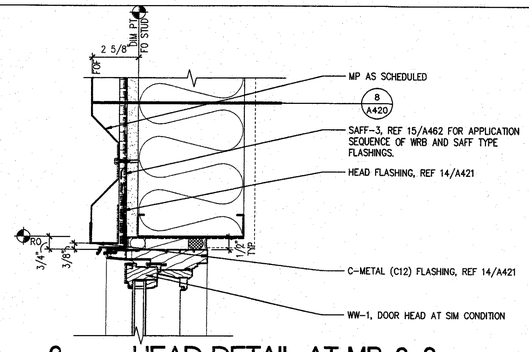

2 HEAD DETAIL AT MP-2, 3

3"=1'-0" DA462-2

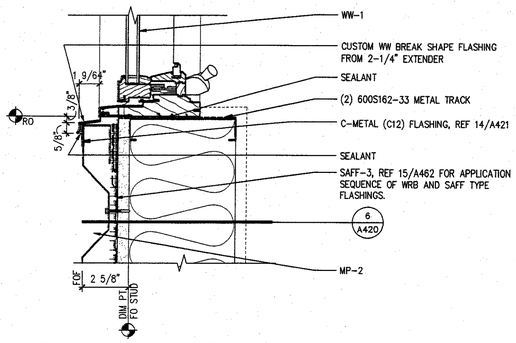

6 SILL DETAIL AT MP-2, 3

3"=1'-0" DA462-6

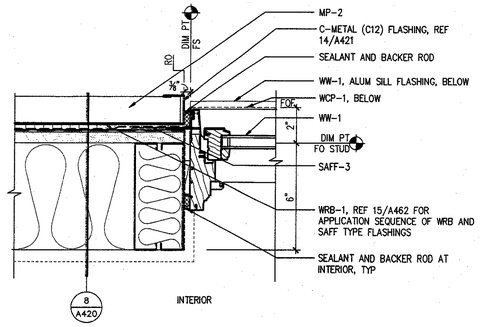

10 JAMB AT MP-2, 3

3"=1'-0" DA462-10

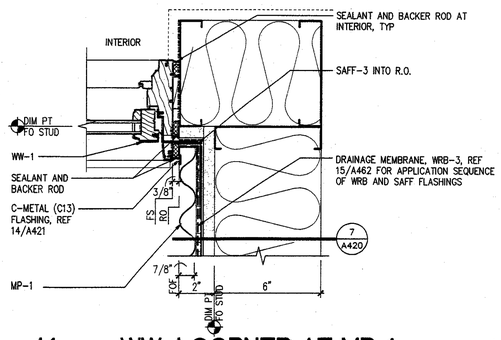

14 WW-1 CORNER AT MP-1

3"=1'-0" DA462-14

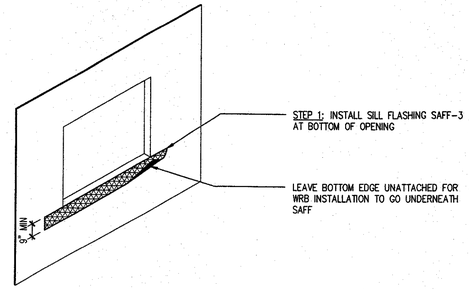

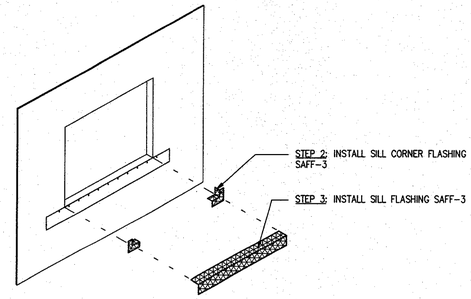

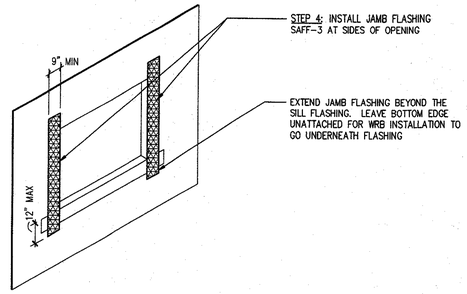

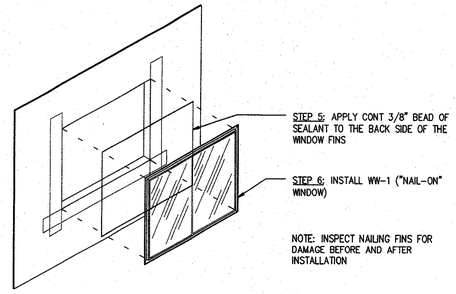

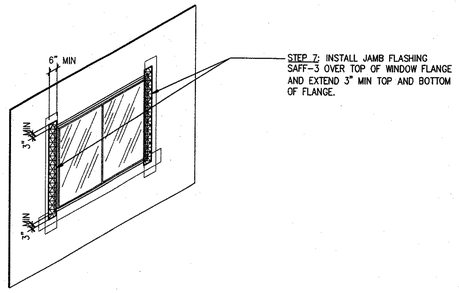

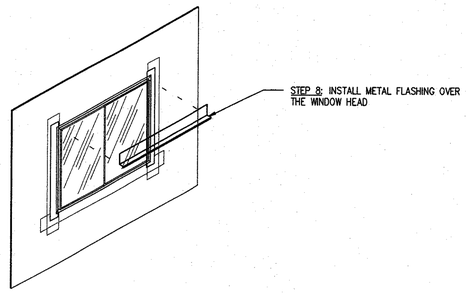

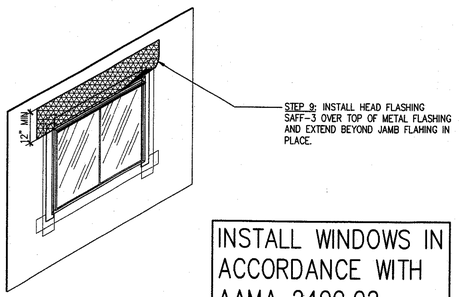

INSTALL WINDOWS IN ACCORDANCE WITH AAMA 2400.02

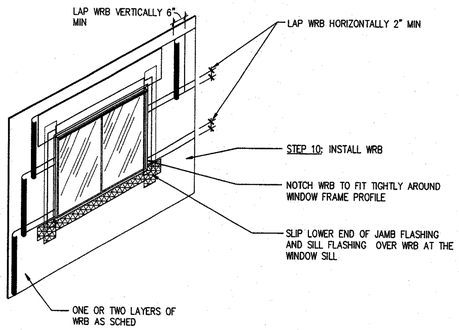

15 WW-1 FLASHING SEQUENCE

1/4"=1'-0"

architecture company
sienna
411 sw sixth
portland, oregon
97204.1602
503.227.5616 v
503.227.3590 f

REGISTERED ARCHITECT
LEE R. WINN
PORTLAND, OR
STATE OF OREGON

RIVERS CONDOS

156 FRONT AVENUE
SALEM, OREGON
RIVERFRONT PARK LLC
429 COURT ST. NE
SALEM, OREGON 97301

project no:25094

CD/PERMIT SET	09.26.07
BUDGET SET	02.20.07
DESIGN DEVELOPMENT	10.10.06
DESIGN REVIEW	03.15.06
PRE-APP SET	03.09.06

© 2007 sienna architecture company
THESE DRAWINGS ARE THE PROPERTY OF SIENNA ARCHITECTURE COMPANY AND ARE NOT TO BE REPRODUCED IN ANY MANNER, EXCEPT WITH THE PRIOR WRITTEN PERMISSION OF SIENNA.

Drawn By Checked By Date

Sheet Title
WINDOW AND DOOR DETAILS

Salem Fire Dept

Sheet Scale
AS SHOWN

Sheet No.
A462

City of Salem Bldg. & Safety Div.

P:\2005\25094\Dwgs\ACAD\CURRENT\SHEET SET\25094-A462.dwg, 9/21/2007 12:20:13 PM, pdf6, DWG to PDF.pc3, 1:1

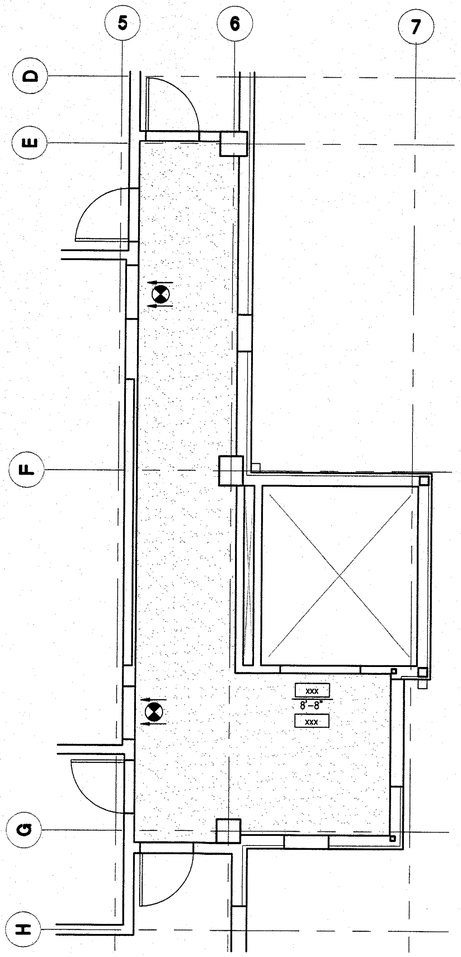

3 REFLECTED CEILING PLAN: LEVEL 3 TO LEVEL 8

1/4"=1"

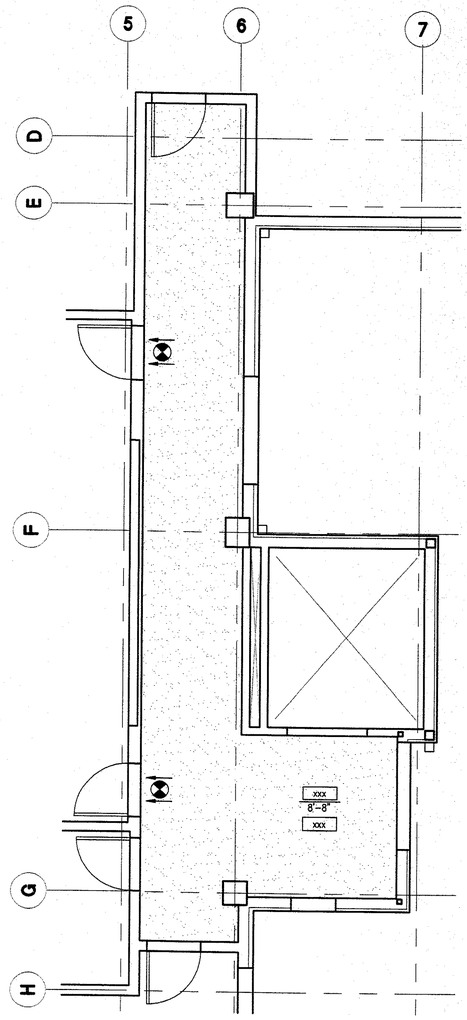

EMERGENCY EXIT ILLUMINATION IS REQUIRED
At the interior and exterior throughout the egress path, and at exterior exit landings.

2 REFLECTED CEILING PLAN: LEVEL 2

1/4"=1"

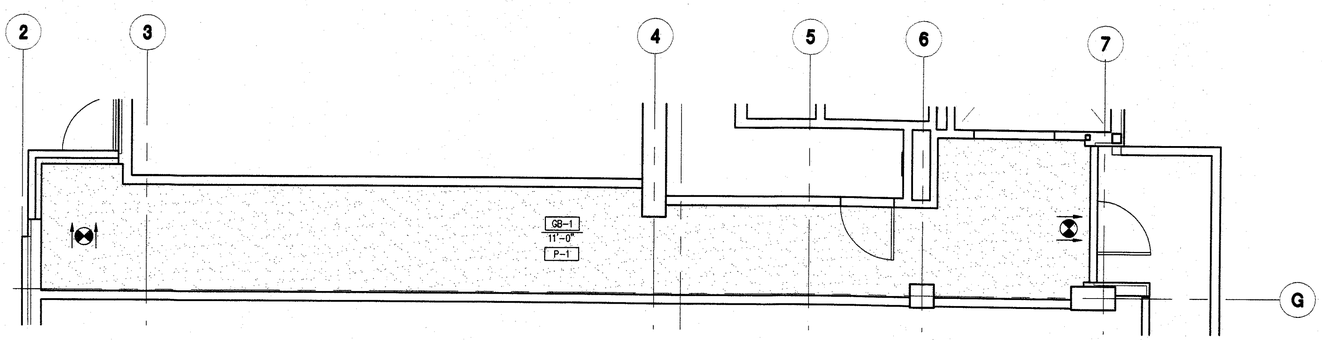

1 REFLECTED CEILING PLAN: LEVEL 1

1/4"=1"

architecture company
sienna
411 sw sixth
portland, oregon
97204.1602
503.227.5616 v
503.227.3590 f

REGISTERED ARCHITECT
LEE R. WINN
PORTLAND, OR
STATE OF OREGON

RIVERS CONDOS

156 FRONT AVENUE
SALEM, OREGON
RIVERFRONT PARK LLC
429 COURT ST. NE
SALEM, OREGON 97301

project no:25094

CD/PERMIT SET	09.26.07
BUDGET SET	02.20.07
DESIGN DIEVELOPMENT	10.30.06
DESIGN REVIEW	03.15.06
PRE-APP SET	03.09.06

© 2007 sienna architecture company
THESE DRAWINGS ARE THE PROPERTY OF SIENNA ARCHITECTURE COMPANY AND ARE NOT TO BE REPRODUCED IN ANY MANNER, EXCEPT WITH THE PRIOR WRITTEN PERMISSION OF SIENNA.

Drawn By Checked By Date

Sheet Title
ENLARGED
REFLECTED
CEILING PLANS

Salem Fire Dept

Sheet Scale
AS SHOWN

Sheet No.
A501

City of Salem
Bldg. & Safety Div.

P:\2005\25094\Dwgs\ACAD\CURRENT\SHEET SET\25094-A501.dwg, 9/21/2007 12:55:23 PM, pdf, DWG to PDF.pc3, 1:1

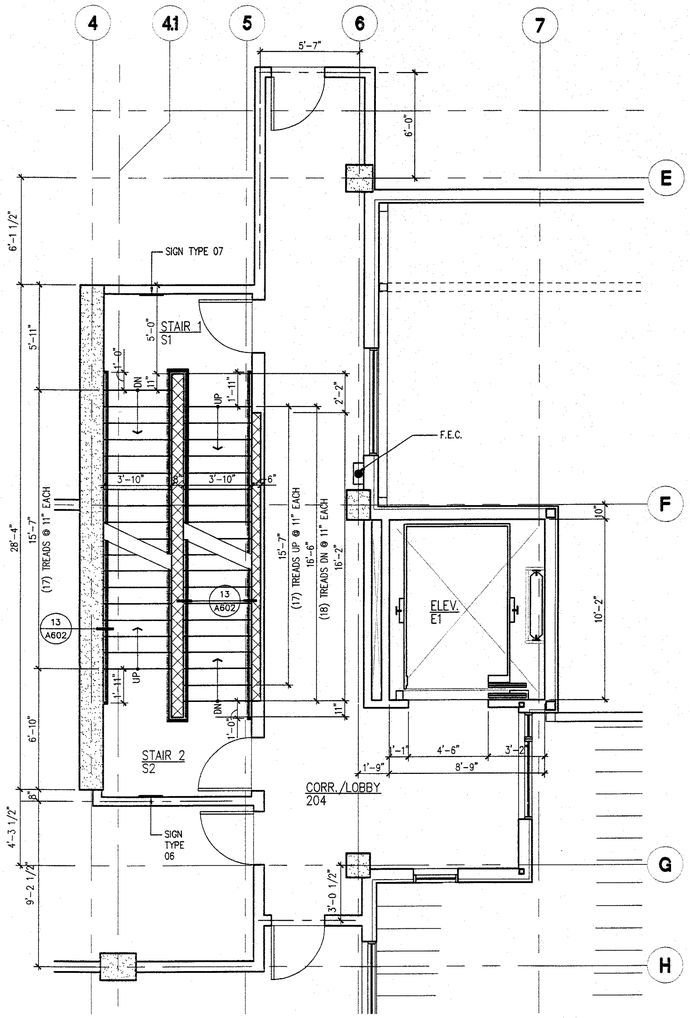

1 ENLARGED CORE PLAN: LEVEL 2

1/4"=1'-0"

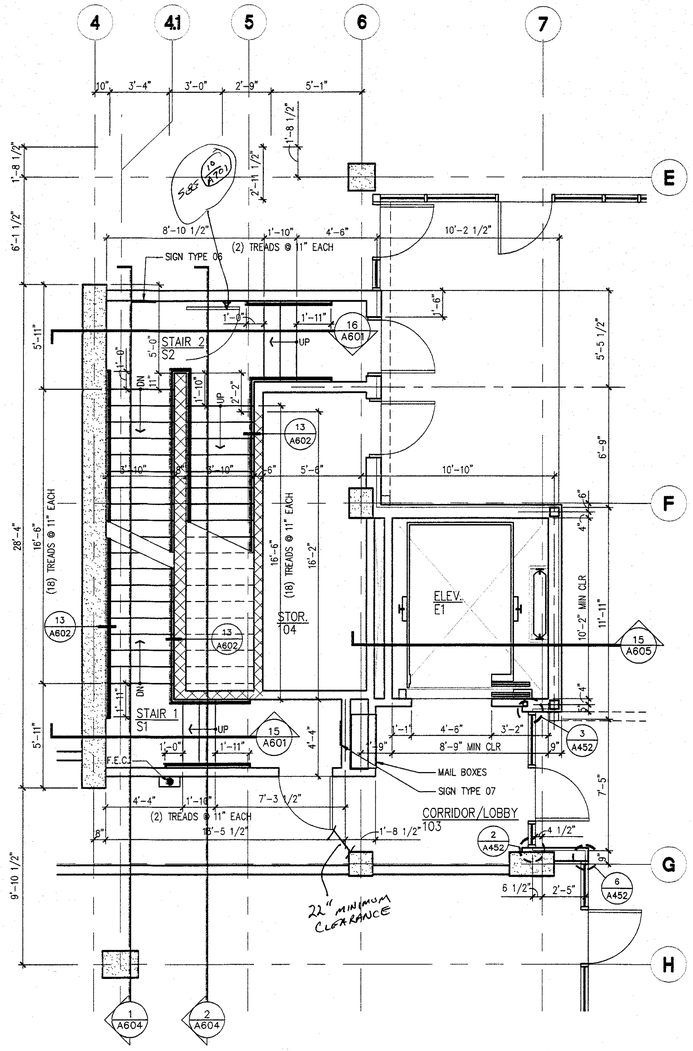

2 ENLARGED CORE PLAN: LEVEL 1

1/4"=1'-0"

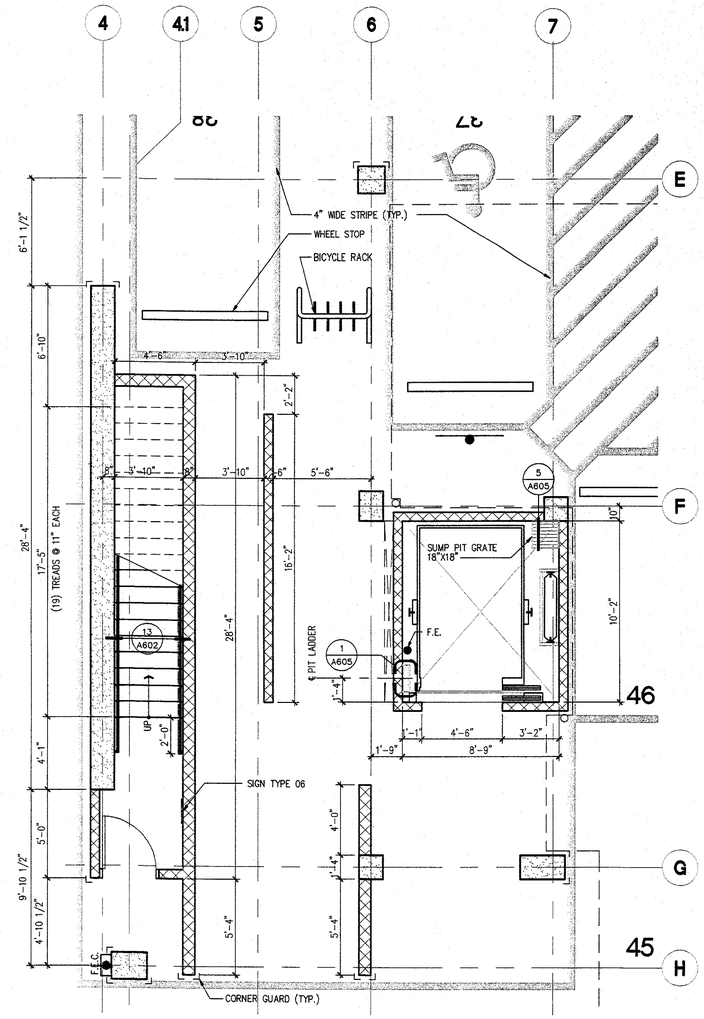

3 ENLARGED CORE PLAN: PARKING GARAGE

1/4"=1'-0"

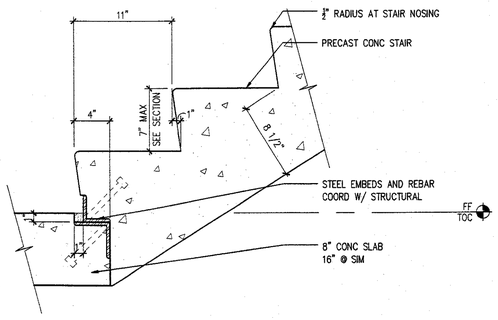

13 PRECAST STAIR DETAIL

1 1/2"=1'-0"

DA601-13

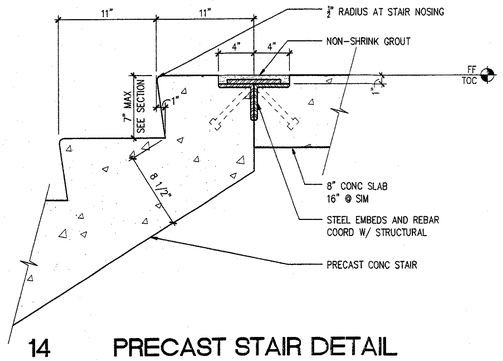

14 PRECAST STAIR DETAIL

1 1/2"=1'-0"

DA601-14

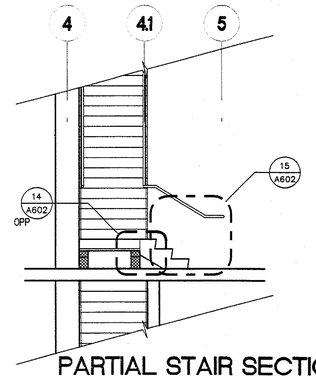

15 PARTIAL STAIR SECTION S1

1/4"=1'-0"

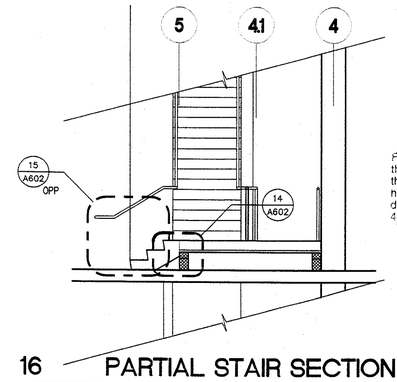

FLOOR / LANDINGS
Floor/Landing shall not be more than 1/2 inch lower than the threshold of the doorway; shall have a length measured in the direction of travel of not less than 44 inches.

16 PARTIAL STAIR SECTION S2

1/4"=1'-0"

architecture company
sienna
411 sw sixth
portland, oregon
97204.1602
503.227.5616 v
503.227.3590 f

REGISTERED ARCHITECT
LEE R. WINN
PORTLAND, OR
STATE OF OREGON

RIVERS CONDOS

156 FRONT AVENUE
SALEM, OREGON
RIVERFRONT PARK LLC
429 COURT ST. NE
SALEM, OREGON 97301
project no:25094

CD/PERMIT SET	09.26.07
BUDGET SET	02.20.07
DESIGN DEVELOPMENT	10.10.06
DESIGN REVIEW	03.15.06
PRE-APP SET	03.09.06

© 2007 sienna architecture company
THESE DRAWINGS ARE THE PROPERTY OF SIENNA ARCHITECTURE COMPANY AND ARE NOT TO BE REPRODUCED IN ANY MANNER, EXCEPT WITH THE PRIOR WRITTEN PERMISSION OF SIENNA.

Drawn By Checked By Date

Sheet Title
ENLARGED CORE PLANS:
LEVELS 0, 1 AND 2

Salem Fire Dept.

Sheet Scale
AS SHOWN

Sheet No.
A601

City of Salem Bldg. & Safety Div.

P:\25094\Varga\ACAD\CURRENT\SHEET SET\25094-A601.dwg, 9/27/2007 12:26:00 PM, pdk, DWG to PDF.pc3, 1:1

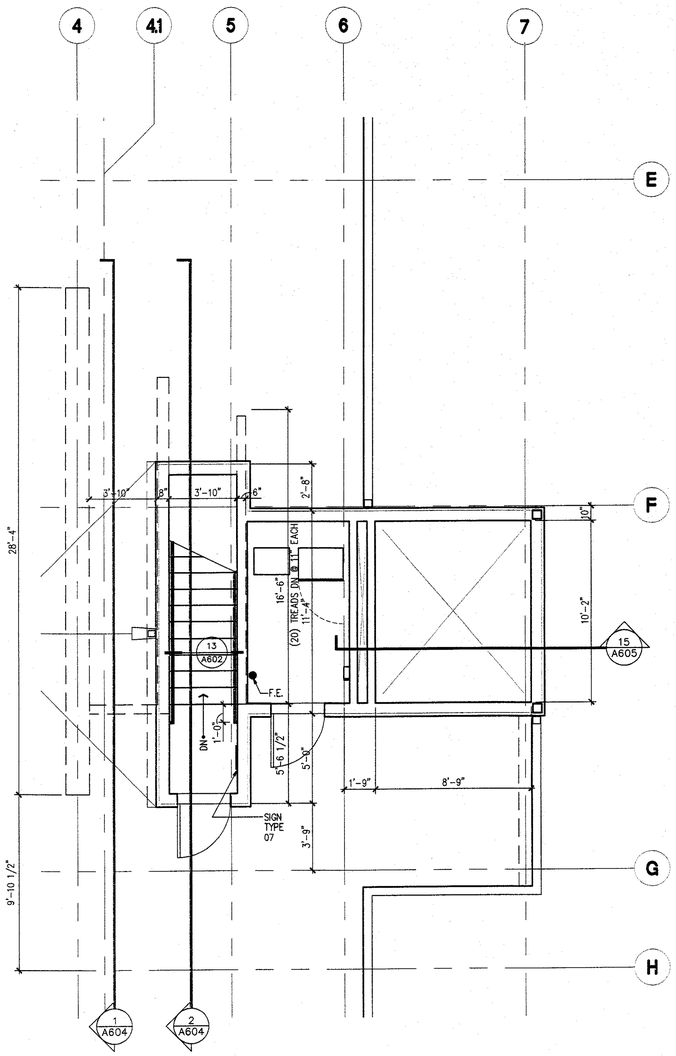

1 ENLARGED CORE PLAN: ROOF

1/4"=1'-0"

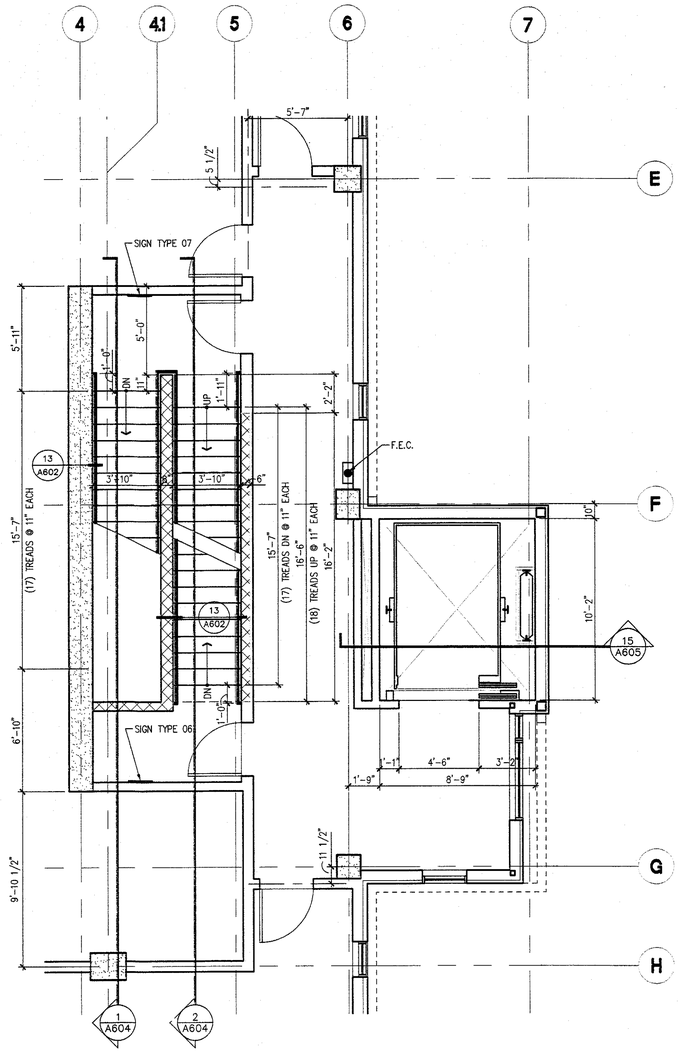

2 ENLARGED CORE PLAN: LEVEL 8

1/4"=1'-0"

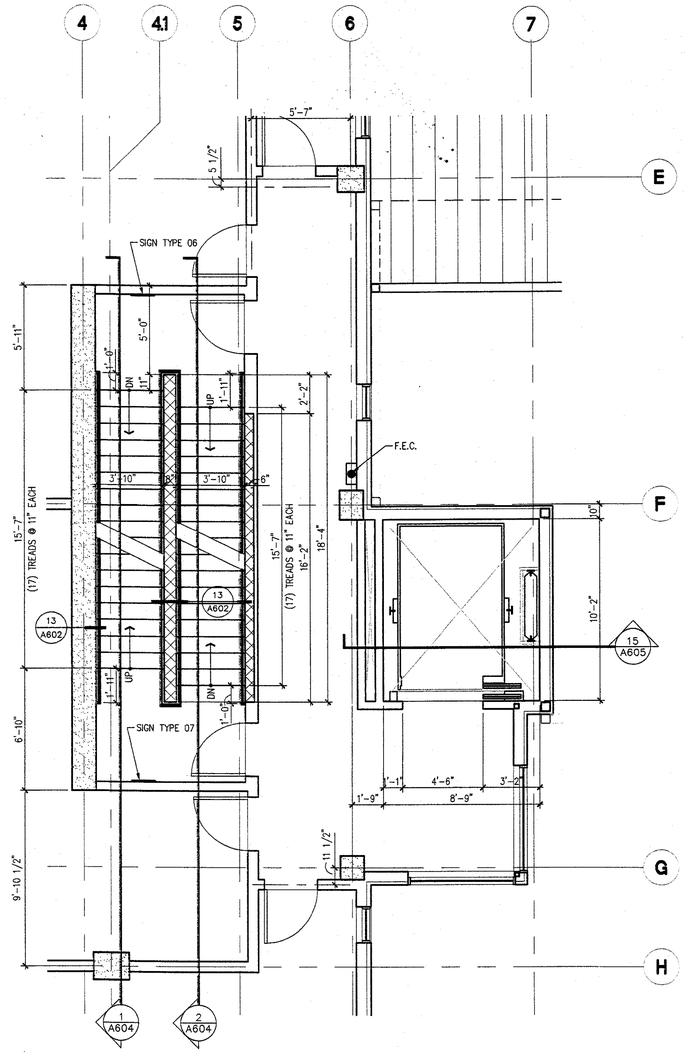

3 ENLARGED CORE PLAN: LEVEL 3 (SIMILAR AT LEVELS 4 THRU 7)

1/4"=1'-0"

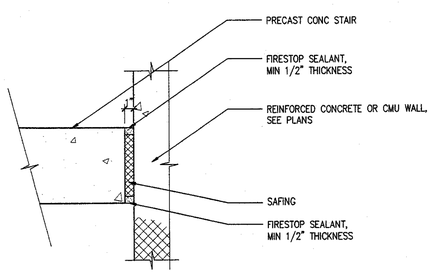

13 PRECAST STAIR DETAIL

1 1/2"=1'-0"

DA602-13

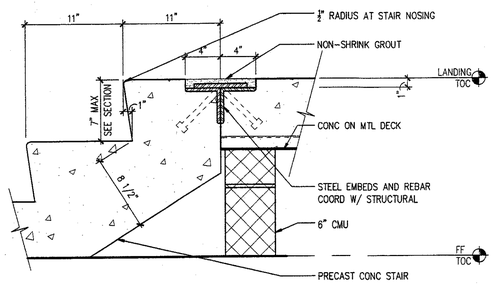

14 PRECAST STAIR DETAIL

1 1/2"=1'-0"

DA602-14

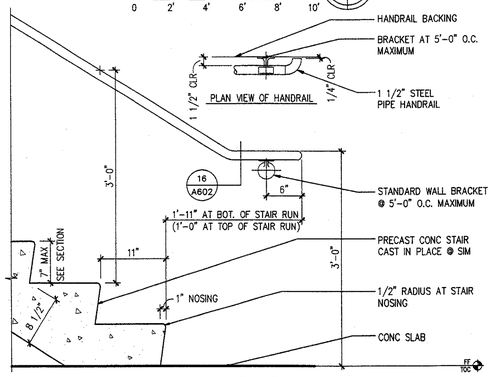

15 DETAIL @ STAIR BASE

1"=1'-0"

DA602-15

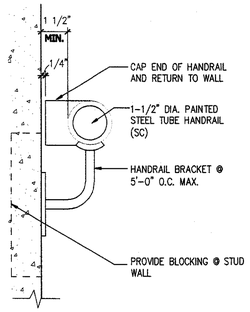

FLOOR / LANDINGS
Floor/Landing shall not be more than 1/2 inch lower than the threshold of the doorway; shall have a length measured in the direction of travel of not less than 44 inches.

16 HANDRAIL BRACKET @ CONC.

3"=1'-0"

DA602-16

architecture company
sienna
411 sw sixth
portland, oregon
97204.1602
503.227.5616 v
503.227.3590 f

REGISTERED ARCHITECT
LEE R. WINN
PORTLAND, OR
STATE OF OREGON

RIVERS CONDOS

156 FRONT AVENUE
SALEM, OREGON
RIVERFRONT PARK LLC
429 COURT ST. NE
SALEM, OREGON 97301

project no:25094

CD/PERMIT SET	09.28.07
BUDGET SET	02.20.07
DESIGN DEVELOPMENT	10.10.06
DESIGN REVIEW	06.15.06
PRE-APP SET	03.09.06

© 2007 sienna architecture company
THESE DRAWINGS ARE THE PROPERTY OF SIENNA ARCHITECTURE COMPANY AND ARE NOT TO BE REPRODUCED IN ANY MANNER, EXCEPT WITH THE PRIOR WRITTEN PERMISSION OF SIENNA.

Drawn By Checked By Date

Sheet Title

ENLARGED CORE PLANS: LEVELS 3 THRU 8 AND ROOF

Salem Fire Dept

Sheet Scale
AS SHOWN

Sheet No.

A602

City of Salem
Bldg. & Safety Div.

P:\2005\25094\Dwgs\AC40\CURRENT\SHEET SET\25094-A602.dwg, 9/21/2007 12:24:50 PM, pdf, DWG to PDF.pc3, 1:1

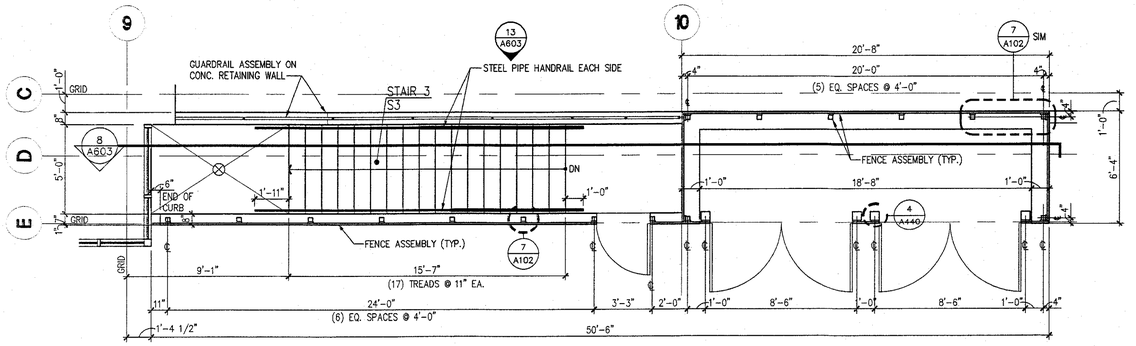

1 PLAN: STAIR S3

1/4"=1'-0"

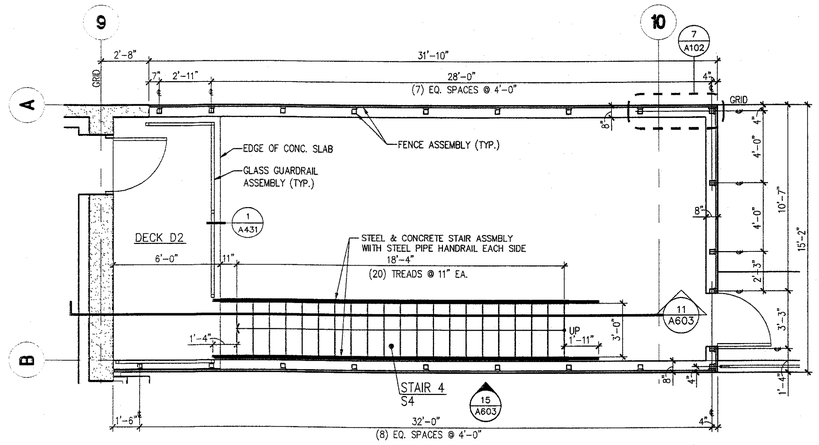

4 STAIR S4 PLAN

1/4"=1'-0"

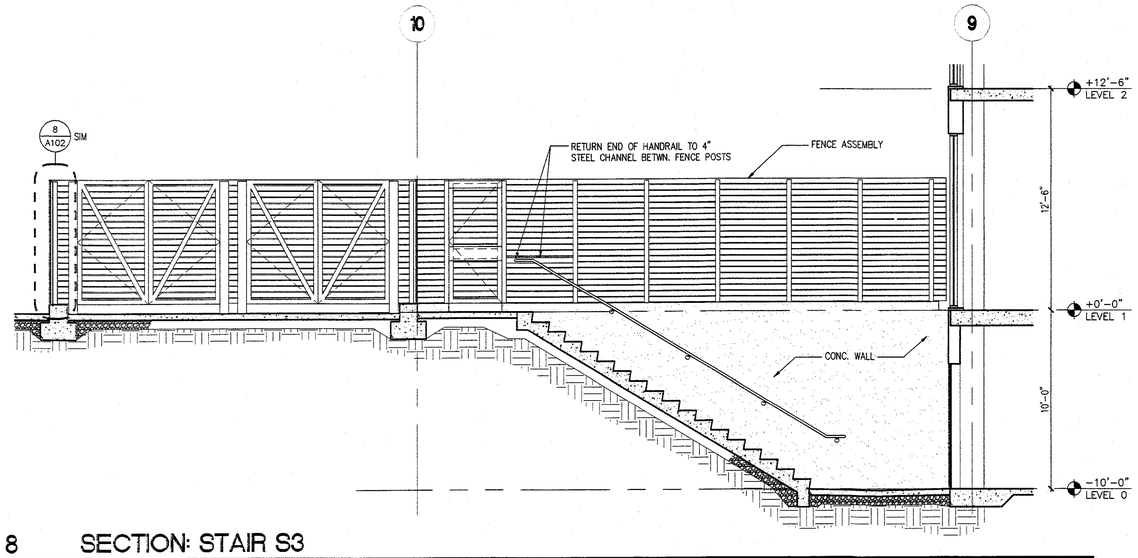

8 SECTION: STAIR S3

1/4"=1'-0"

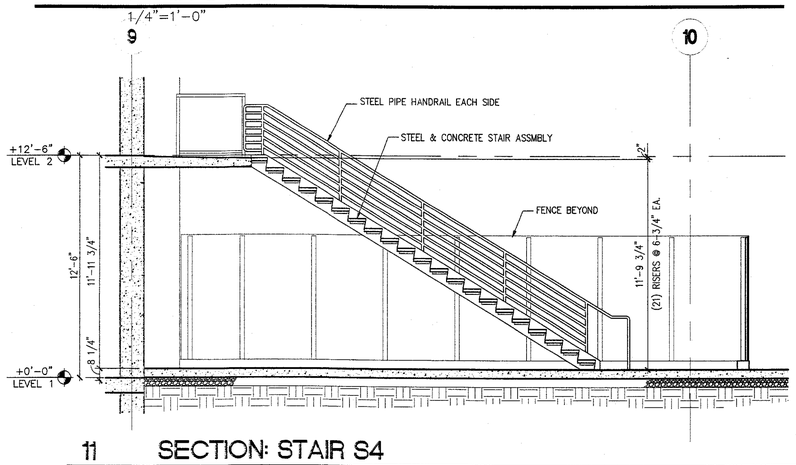

11 SECTION: STAIR S4

1/4"=1'-0"

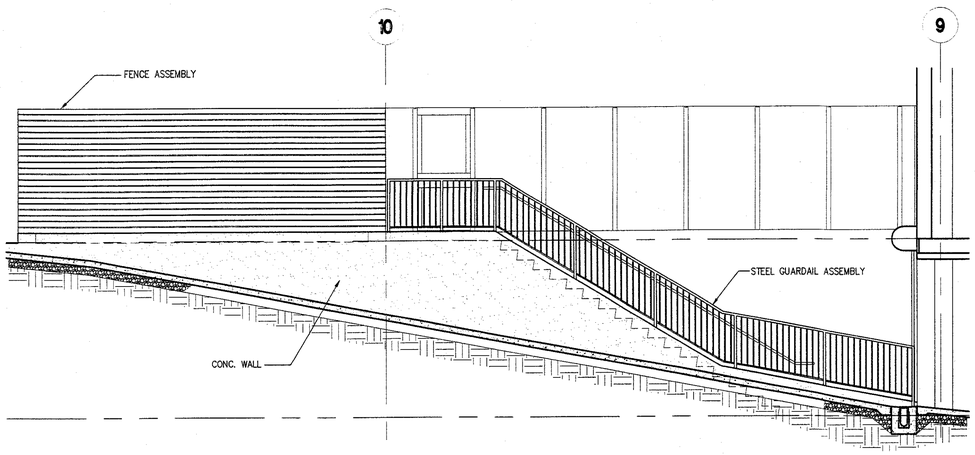

13 ELEVATION: STAIR S3

1/4"=1'-0"

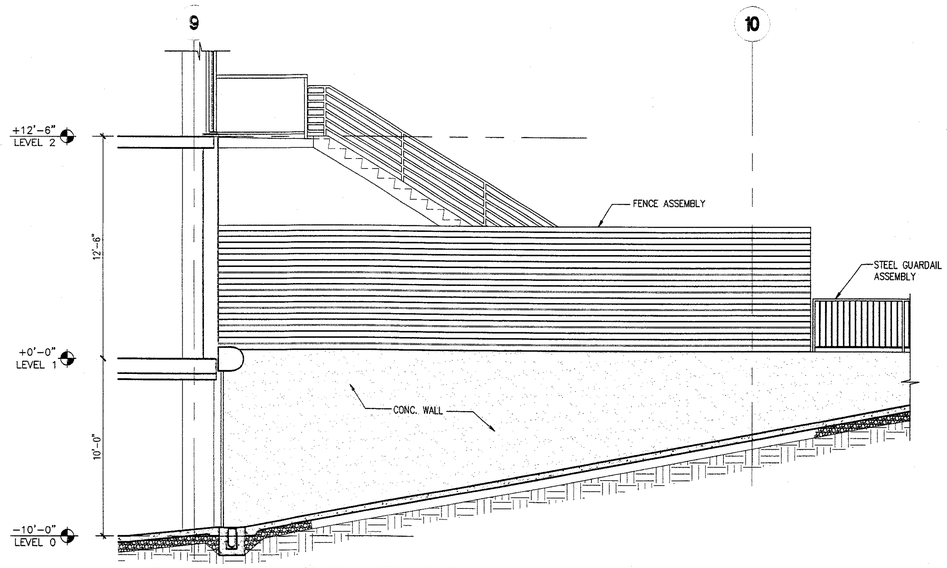

15 ELEVATION: STAIR S4

1/4"=1'-0"

architecture company
sienna
411 sw sixth
portland, oregon
97204.1602
503.227.5616 v
503.227.3590 f

REGISTERED ARCHITECT
LEE R. WINN
PORTLAND, OR
STATE OF OREGON

RIVERS CONDOS

156 FRONT AVENUE
SALEM, OREGON
RIVERFRONT PARK LLC
429 COURT ST. NE
SALEM, OREGON 97301

project no:25094

FLOOR / LANDINGS
Floor/Landing shall not be more than 1/2 inch lower than the threshold of the doorway; shall have a length measured in the direction of travel of not less than 44 inches.

CD/PERMIT SET	09.26.07
BUDGET SET	02.20.07
DESIGN DEVELOPMENT	10.10.06
DESIGN REVIEW	03.15.06
PRE-APP SET	03.09.06

© 2007 sienna architecture company
THESE DRAWINGS ARE THE PROPERTY OF SIENNA ARCHITECTURE COMPANY AND ARE NOT TO BE REPRODUCED IN ANY MANNER, EXCEPT WITH THE PRIOR WRITTEN PERMISSION OF SIENNA.

Drawn By Checked By Date

Sheet Title
STAIR S3 AND STAIR S4
PLANS AND SECTIONS

Salem Fire Dept

Sheet Scale
AS SHOWN

Sheet No.
A603

City of Salem
Bldg. & Safety Div.

P:\20005\25094\Dwgs\ACAD\CURRENT\SHEET SET\25094-A603.dwg, 9/27/2007 12:24:07 PM, pdk, DWG to PDF.pc3, 1:1

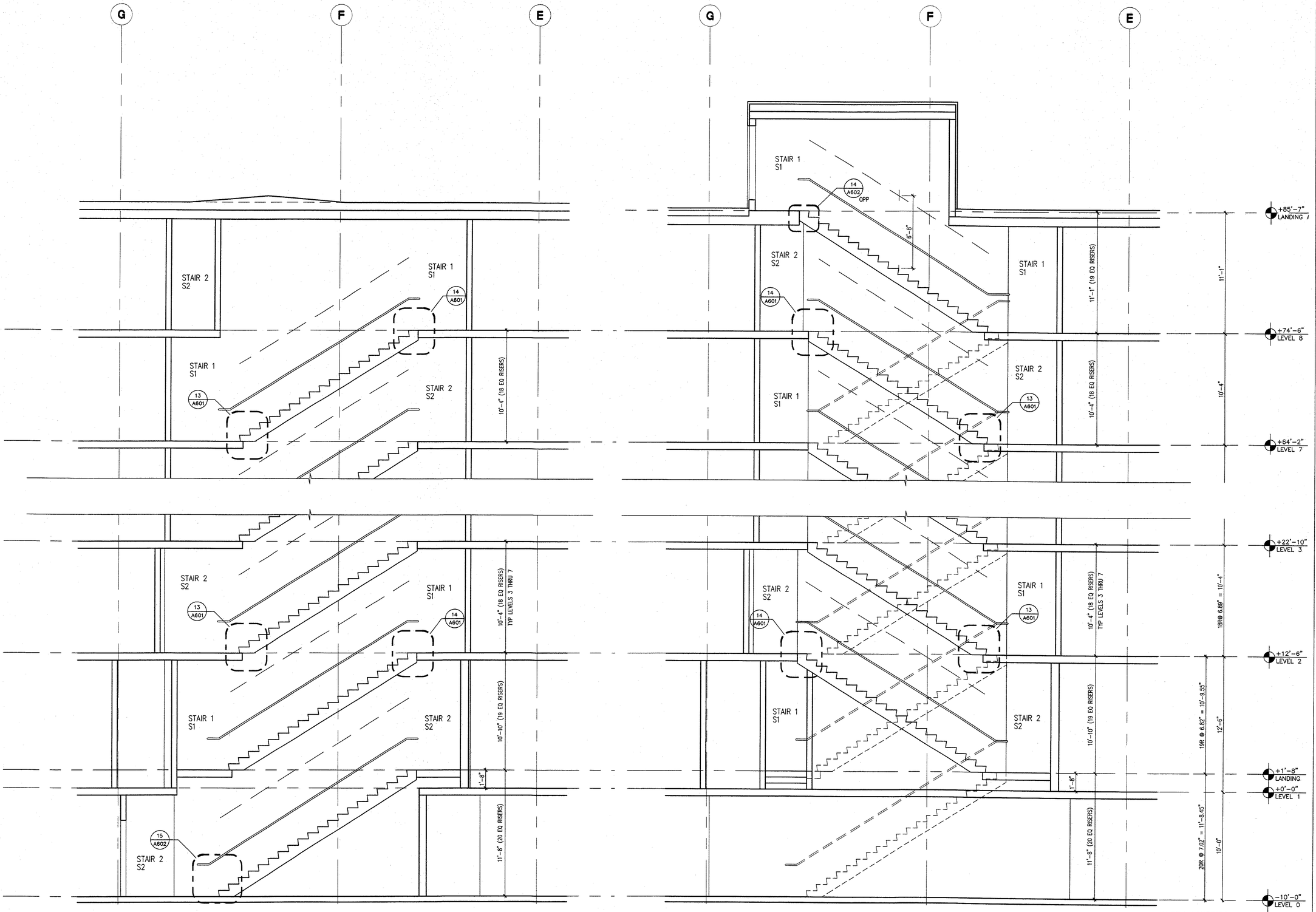

1 STAIR SECTION: S1 AND S2

1/4"=1'-0"

0 2' 4' 6' 8' 10'

2 STAIR SECTION: S1 AND S2

1/4"=1'-0"

0 2' 4' 6' 8' 10'

FLOOR / LANDINGS

Floor/Landing shall not be more than 1/2 inch lower than the threshold of the doorway; shall have a length measured in the direction of travel of not less than 44 inches.

architecture company
sienna
411 sw sixth
portland, oregon
97204.1602
503.227.5616 v
503.227.3590 f

REGISTERED ARCHITECT
LEE R. WINN
PORTLAND, OR
STATE OF OREGON

RIVERS CONDOS

156 FRONT AVENUE
SALEM, OREGON
RIVERFRONT PARK LLC
429 COURT ST. NE
SALEM, OREGON 97301

project no:25094

CD/PERMIT SET	09.26.07
BUDGET SET	02.20.07
DESIGN DEVELOPMENT	10.10.06
DESIGN REVIEW	00.15.06
PRE-APP SET	00.09.06

© 2007 sienna architecture company
THESE DRAWINGS ARE THE PROPERTY OF SIENNA ARCHITECTURE COMPANY AND ARE NOT TO BE REPRODUCED IN ANY MANNER, EXCEPT WITH THE PRIOR WRITTEN PERMISSION OF SIENNA.

Drawn By Checked By Date

Sheet Title

STAIR SECTIONS:

STAIR S1 AND S2

Salem Fire Dept

Sheet Scale

AS SHOWN

Sheet No.

A604

City of Salem
Bldg. & Safety Div.

P:\2005\25094\Dwgs\ACAD\CURRENT\SHEET SET\25094-A604.dwg, 9/21/2007 12:25:25 PM, pdf4.DWG to PDF.pc3, 1:1

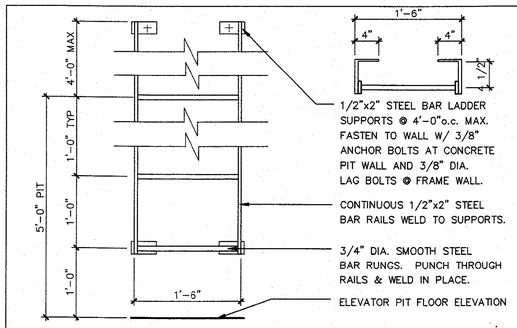

1 PIT LADDER

1"=1'-0" DA605-1

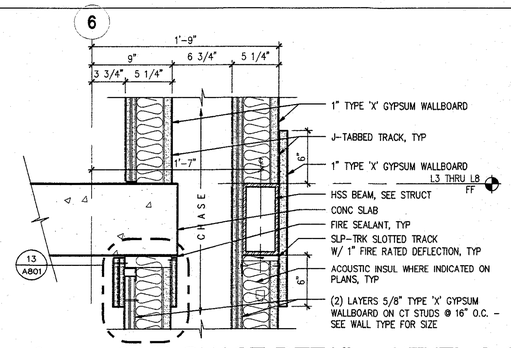

2 2 HR CHASE DETAIL - LEVEL 3-8

1 1/2"=1'-0" DA605-02

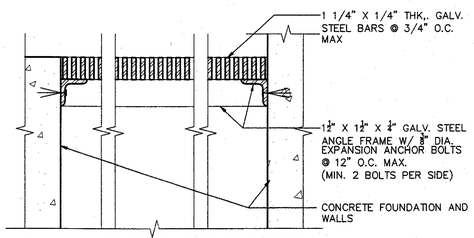

5 SUMP PIT GRATE

3"=1'-0" DA605-5

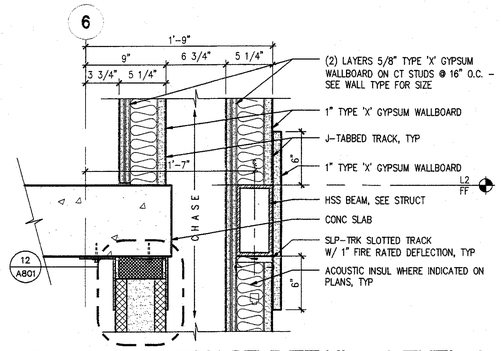

6 2 HR CHASE DETAIL - LEVEL 2

1 1/2"=1'-0" DA605-06

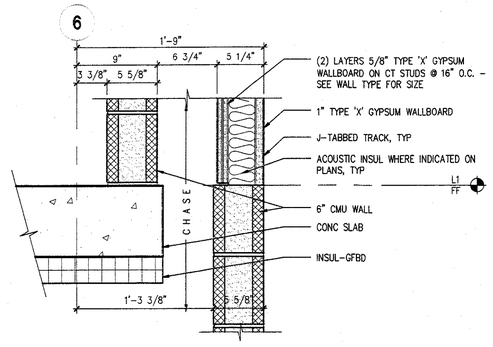

10 2 HR CHASE DETAIL - LEVEL 1

1 1/2"=1'-0" DA605-10

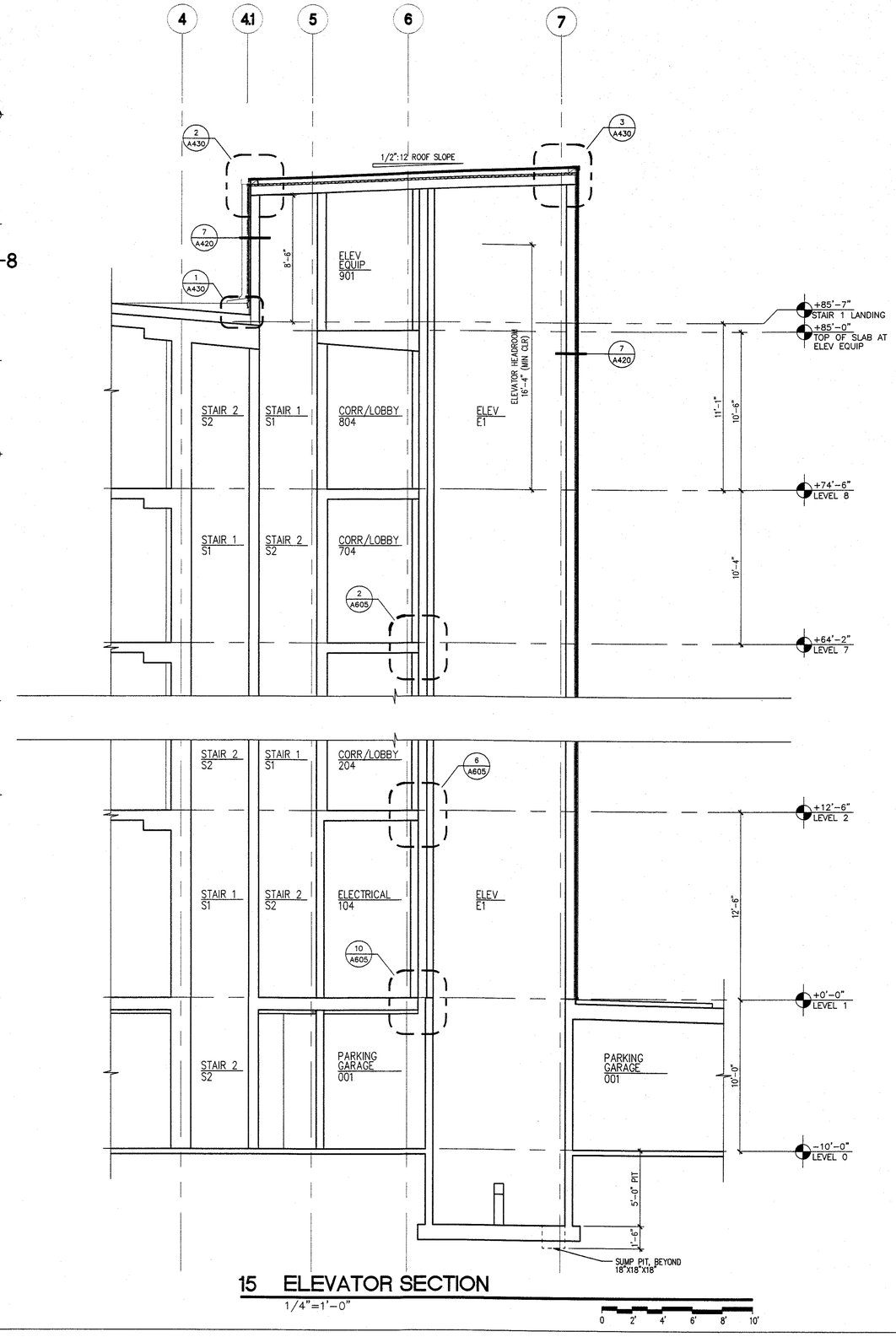

15 ELEVATOR SECTION

1/4"=1'-0"

architecture company
sienna
411 sw sixth
portland, oregon
97204.1602
503.227.5616 v
503.227.3590 f

REGISTERED ARCHITECT
LEE R. WINN
PORTLAND, OR
STATE OF OREGON

RIVERS CONDOS

156 FRONT AVENUE
SALEM, OREGON
RIVERFRONT PARK LLC
429 COURT ST. NE
SALEM, OREGON 97301
project no:25094

CD/PERMIT SET	09.26.07
BUDGET SET	02.20.07
DESIGN DEVELOPMENT	10.10.06
DESIGN REVIEW	06.16.06
PRE-APP SET	03.09.06

© 2007 sienna architecture company
THESE DRAWINGS ARE THE PROPERTY OF SIENNA ARCHITECTURE COMPANY AND ARE NOT TO BE REPRODUCED IN ANY MANNER, EXCEPT WITH THE PRIOR WRITTEN PERMISSION OF SIENNA.

Drawn By Checked By Date

Sheet Title
ELEVATOR SECTION AND CHASE DETAILS

Salem Fire Dept

Sheet Scale
AS SHOWN

Sheet No.
A605

City of Salem Bldg. & Safety Div.

P:\2005\25094\Dwgs\ACAD\CURRENT\SHEET SET\25094-A605.dwg, 9/21/2007 12:20:37 PM, pdf4, DWG to PDF.pc3, 1:1

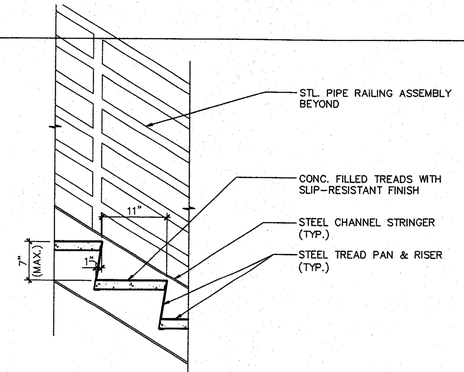

3 STAIR SECTION

1"=1'-0" DA606-03

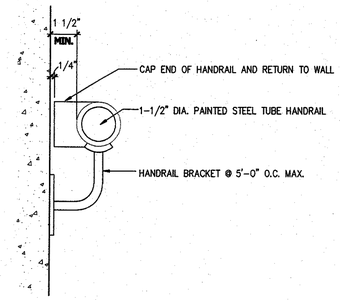

4 HANDRAIL BRACKET @ CONC.

3"=1'-0" DA606-04

architecture company
sienna
411 sw sixth
portland, oregon
97204.1602
503.227.5616 v
503.227.3590 f

REGISTERED ARCHITECT
LEE R. WINN
PORTLAND, OR
STATE OF OREGON

RIVERS CONDOS

156 FRONT AVENUE
SALEM, OREGON
RIVERFRONT PARK LLC
429 COURT ST. NE
SALEM, OREGON 97301

project no:25094

CD/PERMIT SET	09.26.07
BUDGET SET	02.20.07
DESIGN DEVELOPMENT	10.10.06
DESIGN REVIEW	06.15.06
PRE-APP SET	03.09.06

© 2007 sienna architecture company
THESE DRAWINGS ARE THE PROPERTY OF SIENNA ARCHITECTURE COMPANY AND ARE NOT TO BE REPRODUCED IN ANY MANNER, EXCEPT WITH THE PRIOR WRITTEN PERMISSION OF SIENNA.

Drawn By Checked By Date

Sheet Title
STAIR DETAILS

Salem Fire Dept

Sheet Scale
AS SHOWN

Sheet No.
A606

City of Salem
Bldg. & Safety Div.

P:\2005\25094\Dwgs\ACAD\CURRENT\SHEET SET\25094-A606.dwg, 9/27/2007 12:27:59 PM, pdk, DWG to PDF.pc3, 1:1

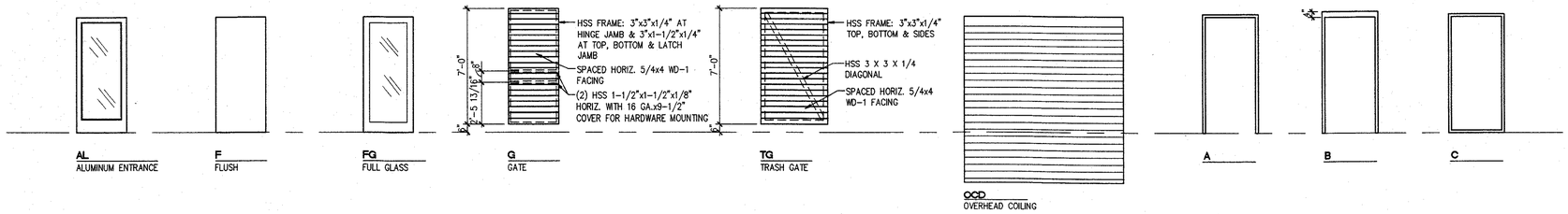

1 DOOR TYPES
1/4"=1'-0"

2 FRAME TYPES
1/4"=1'-0"

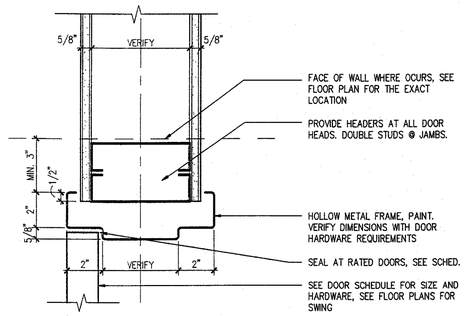

3 TYP HEAD AT HM DOOR
3"=1'-0" DA701-3

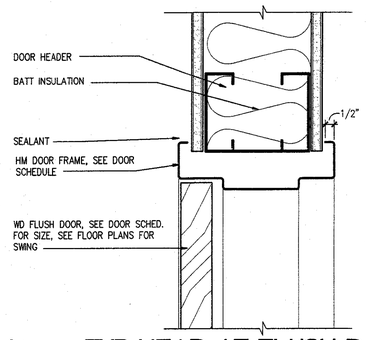

4 TYP HEAD AT FLUSH DOOR
3"=1'-0" DA701-4

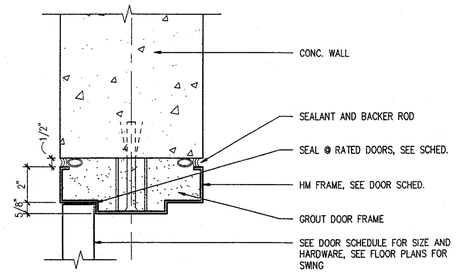

5 TYP. HEAD @ CONC. WALL
3"=1'-0" DA701-5

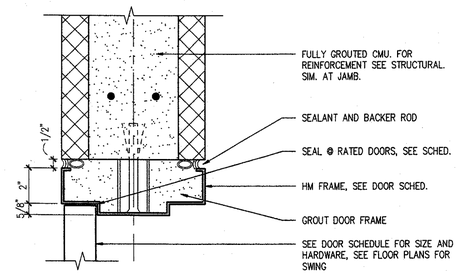

6 TYP. HEAD @ CMU BLOCK WALL
3"=1'-0" DA701-6

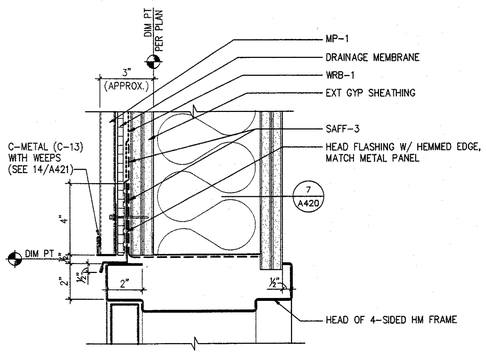

7 HM HEAD AT MP-1
3"=1'-0" DA701-7

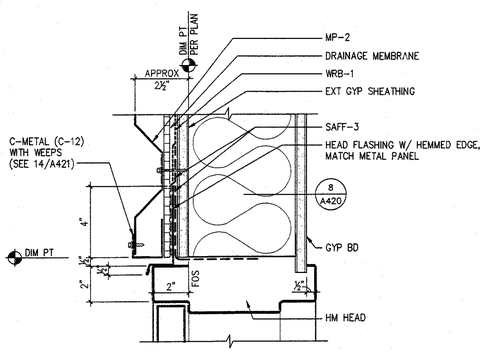

8 HM HEAD AT MP-2
3"=1'-0" DA701-8

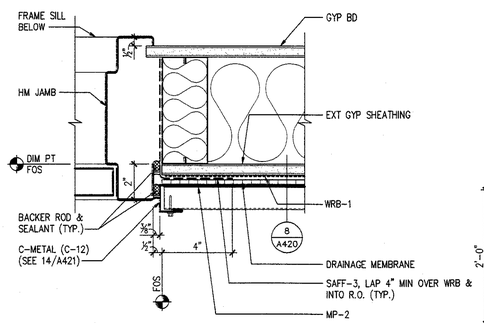

9 HM JAMB AT MP-2
3"=1'-0" DA701-9

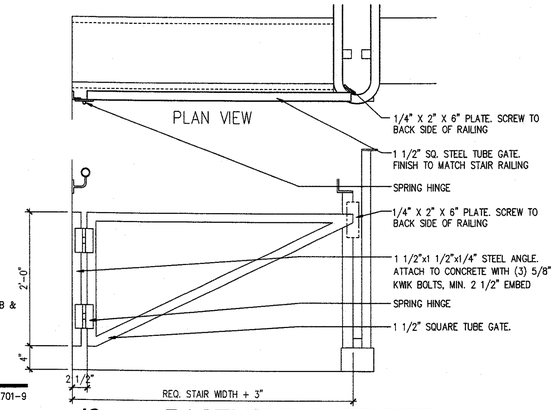

10 BASEMENT GATE DETAIL
1"=1'-0" DA701-10

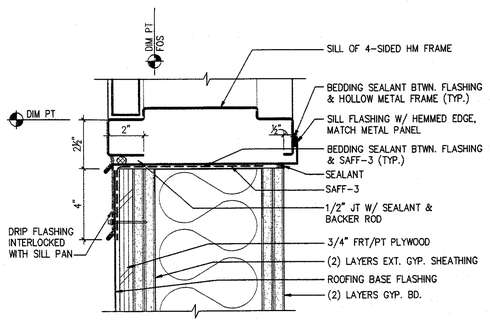

11 HM SILL
3"=1'-0" DA701-11

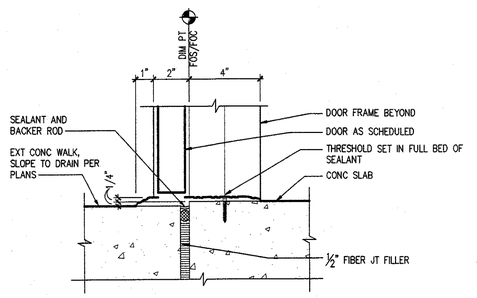

12 HM DOOR THRESHOLD
3"=1'-0" DA701-12

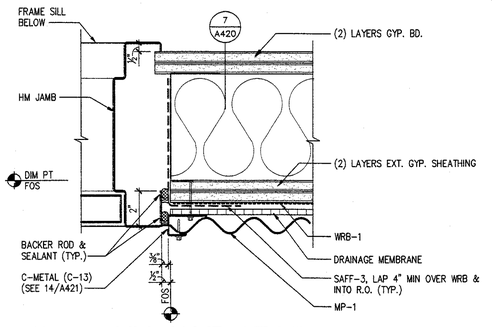

13 HM JAMB AT MP-1
3"=1'-0" DA701-13

LOCKS AND LATCHES

Exit doors shall be openable from the inside without use of key or any special knowledge or effort. Manually operated edge or surface mounted flush bolts and surface bolts are prohibited. When exit doors are used in pairs and approved automatic flush bolts are used, the door leaf having the automatic flush bolts shall have no door knob or surface-mounted hardware. The unlatching of any leaf shall not require more than one operation.

architecture company
sienna
411 sw sixth
portland, oregon
97204.1602
503.227.5616 v
503.227.3590 f

REGISTERED ARCHITECT
LEE R. WINN
PORTLAND, OR
STATE OF OREGON

RIVERS CONDOS

156 FRONT AVENUE
SALEM, OREGON
RIVERFRONT PARK LLC
429 COURT ST. NE
SALEM, OREGON 97301
project no:25094

CD/PERMIT SET	09.26.07
BUDGET SET	02.20.07
DESIGN DEVELOPMENT	10.10.06
DESIGN REVIEW	08.15.06
PRE-APP SET	06.09.06

© 2007 sienna architecture company
THESE DRAWINGS ARE THE PROPERTY OF SIENNA ARCHITECTURE COMPANY AND ARE NOT TO BE REPRODUCED IN ANY MANNER, EXCEPT WITH THE PRIOR WRITTEN PERMISSION OF SIENNA.

Drawn By Checked By Date

Sheet Title
DOOR TYPES
FRAME TYPES
DOOR DETAILS

Salem Fire Dept

Sheet Scale
AS SHOWN

Sheet No.
A701

City of Salem
Bldg. & Safety Div.

P:\2005\25094\Dwgs\ACAD\CURRENT\SHEET SET\25094-A701.dwg, 9/7/2007 12:31:40 PM, pdf, DWG to PDF.pc5, 1:1

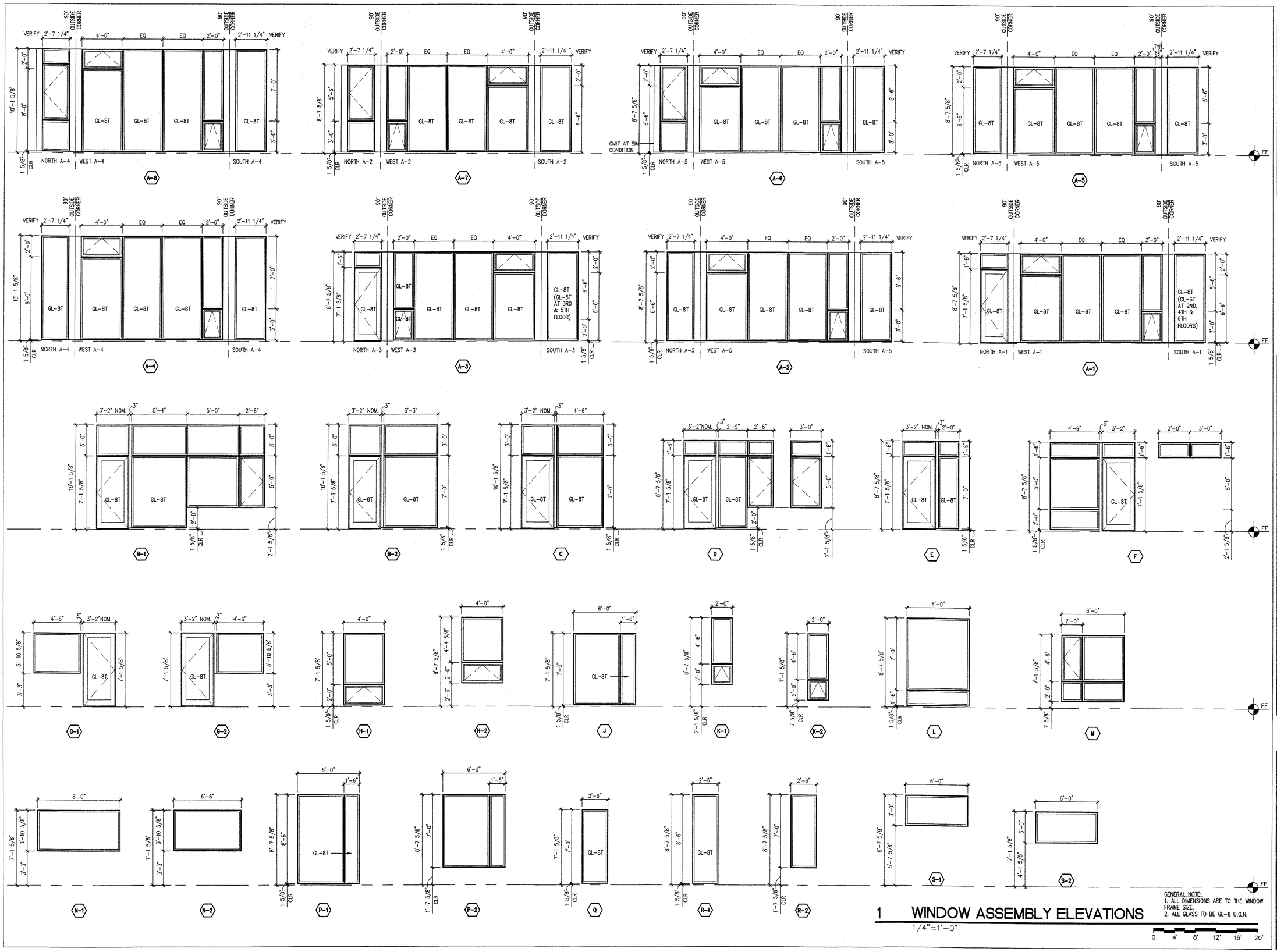

1 WINDOW ASSEMBLY ELEVATIONS

1/4"=1'-0"

GENERAL NOTE:
1. ALL DIMENSIONS ARE TO THE WINDOW FRAME SIZE.
2. ALL GLASS TO BE GL-8 U.O.N.

0 4' 8' 12' 16' 20'

architecture company
sienna
411 sw sixth
portland, oregon
97204.1602
503.227.5616 v
503.227.3590 f

REGISTERED ARCHITECT
LEE R. WINN
PORTLAND, OR
STATE OF OREGON

RIVERS CONDOS

156 FRONT AVENUE
SALEM, OREGON
RIVERFRONT PARK LLC
429 COURT ST. NE
SALEM, OREGON 97301

project no:25094

CD/PERMIT SET	09.26.07
BUDGET SET	02.20.07
DESIGN DEVELOPMENT	10.10.06
DESIGN REVIEW	06.15.06
PRE-APP SET	03.09.06

© 2007 sienna architecture company
THESE DRAWINGS ARE THE PROPERTY OF SIENNA ARCHITECTURE COMPANY AND ARE NOT TO BE REPRODUCED IN ANY MANNER, EXCEPT WITH THE PRIOR WRITTEN PERMISSION OF SIENNA.

Drawn By Checked By Date

Sheet Title
WINDOW ASSEMBLY
ELEVATIONS

Salem Fire Dept

Sheet Scale
1/4" = 1'-0"

Sheet No.
A702

City of Salem
Bldg. & Safety Div.

P:\2025\25094\Dwgs\ACAD\CURRENT\SHEET SET\25094-A702.dwg, 9/21/2007 12:31:11 PM, pdk, DWG to PDF.pc3, 1:1

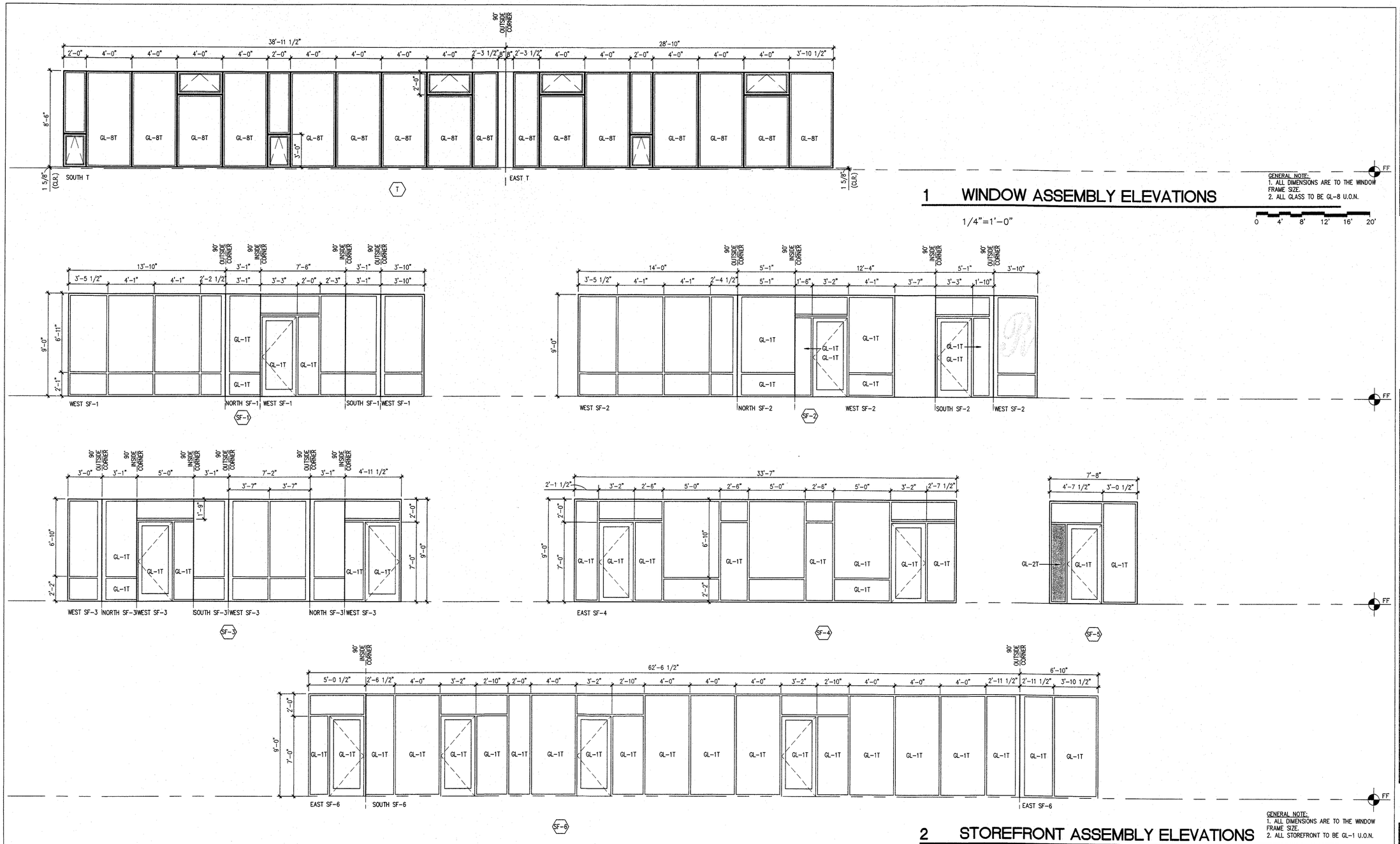

1 WINDOW ASSEMBLY ELEVATIONS

1/4"=1'-0"

GENERAL NOTE:
1. ALL DIMENSIONS ARE TO THE WINDOW FRAME SIZE.
2. ALL GLASS TO BE GL-8 U.O.N.

0 4' 8' 12' 16' 20'

2 STOREFRONT ASSEMBLY ELEVATIONS

1/4"=1'-0"

GENERAL NOTE:
1. ALL DIMENSIONS ARE TO THE WINDOW FRAME SIZE.
2. ALL STOREFRONT TO BE GL-1 U.O.N.

0 4' 8' 12' 16' 20'

architecture company
sienna
411 sw sixth
portland, oregon
97204.1602
503.227.5616 v
503.227.3590 f

REGISTERED ARCHITECT
LEE R. WINN
PORTLAND, OR
STATE OF OREGON

RIVERS CONDOS

156 FRONT AVENUE
SALEM, OREGON
RIVERFRONT PARK LLC
429 COURT ST. NE
SALEM, OREGON 97301

project no:25094

CD/PERMIT SET	09.26.07
BUDGET SET	02.20.07
DESIGN DEVELOPMENT	10.10.06
DESIGN REVIEW	03.15.06
PRE-APP SET	03.08.06

© 2007 sienna architecture company
THESE DRAWINGS ARE THE PROPERTY OF SIENNA ARCHITECTURE COMPANY AND ARE NOT TO BE REPRODUCED IN ANY MANNER, EXCEPT WITH THE PRIOR WRITTEN PERMISSION OF SIENNA.

Drawn By Checked By Date

Sheet Title
WINDOW AND STOREFRONT ELEVATIONS

Salem Fire Dept.

Sheet Scale
1/4" = 1'-0"

Sheet No.
A703

City of Salem
Bldg. & Safety Div.

P:\2005\25094\Dwgs\ACAD\CURRENT\SHEET SET\25094-A703.dwg, 9/27/2007 12:30:51 PM, pdk, DWG to PDF.pc3, 1:1

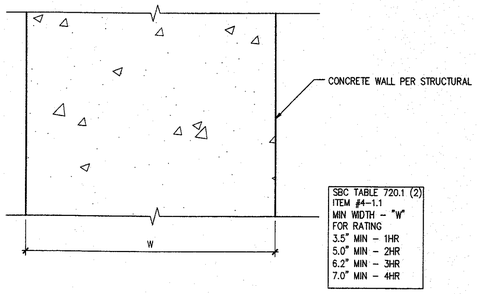

01 CONCRETE - FR

3"=1'-0" DA801-01

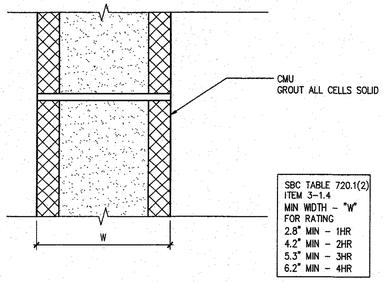

02 CMU - FR

3"=1'-0" DA80002

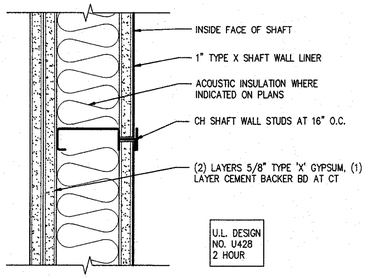

03 SHAFT WALL - 2 HR

3"=1'-0" DA801-03

WALL TYPE LEGEND

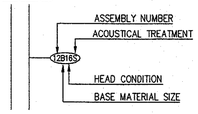

BASE MATERIAL SIZE

METAL STUD	CMU
A = 2 1/2"	G = 4"
B = 3 5/8"	H = 6"
C = 4"	J = 8"
D = 6"	K = 10"
E = 8"	L = 12"
F = 1 5/8"	X = PER ASSEMBLY DETAIL
G = 4"	
X = PER ASSEMBLY DETAIL	

ACOUSTICAL TREATMENT

S = ACOUSTICAL BLANKET & SEALANTS
N = NO ACOUSTIC TREATMENTS
T = MINERAL WOOL INSULATION, THICKNESS TO MATCH STUD SIZE (R=4.2/INCH)

HEAD CONDITION

SEE ASSEMBLY NUMBER, UNLESS AS NOTED BELOW:

Y = TO BOTTOM OF STRUCTURE
Z = PARTIAL HEIGHT WALL, HEIGHT AS NOTED ON PLAN

WALL TYPES NOTES

A. TYPICAL INTERIOR WALLS SHALL BE _____ UNLESS OTHERWISE NOTED ON DRAWINGS.

B. ASSEMBLIES FOR FIRE RATED AND ACOUSTICAL WALLS AND COLUMNS SHALL EXTEND FROM STRUCTURAL FLOOR TO UNDERSIDE OF FLOOR DECK OR ROOF ABOVE, UNLESS SPECIFICALLY NOTED OTHERWISE. ALL OPENINGS AND JOINTS SHALL BE PROTECTED AS REQUIRED BY CODE.

C. MAINTAIN FIRE RESISTANCE RATING FOR ALL CONSTRUCTION INDICATED AT THROUGH-WALL PENETRATIONS, BUILT-IN WALL FIXTURES, ACCESSORIES, AND BEHIND MAILBOXES, FIRE EXTINGUISHER CABINETS, PLUMBING FIXTURES, ELECTRIC PANELS AND SIMILAR ITEMS, IN COMPLIANCE WITH APPLICABLE CODES. COORDINATE CONSTRUCTION OF FIRE-RATED ASSEMBLIES WITH DESIGNATED DESIGN NUMBER.

D. COMPLETELY SEAL AROUND PENETRATIONS THROUGH ACCOUSTICAL WALLS. FILL DEPTH OF GAPS AROUND CUT-OUTS FOR ELECTRICAL BOXES, PIPES AND PLUMBING, AND OTHER PENETRATIONS. PROVIDE INSULATION BETWEEN THE CONCEALED FACE OF FINISH MATERIALS (WITHIN THE STUD OR JOIST CAVITY) AND PIPES, PLUMBING, THE BACK OF BOXES OR OTHER RECESSED FIXTURES.

E. WHERE LARGER STUDS OR FURRING ARE REQUIRED TO COVER DUCTS, PIPING, CONDUIT, ETC., THE LARGER STUD SIZE OR FURRING SHALL BE PROVIDED AND SHALL EXTEND THE FULL SURFACE OF THE WALL LENGTH AND HEIGHT WHERE THE FURRING OCCURS.

F. PROVIDE ALL NECESSARY ANCHORAGE BLOCKING, BACKING AND FRAMING FOR HANDRAILS, DOOR STOPS, ELECTRO-MAGNETIC HOLD-OPENS, CASEWORK, SHELVING, MIRRORS, WALL MOUNTED EQUIPMENT AND ALL OTHER ITEMS AS REQUIRED FOR COMPLETE INSTALLATION.

G. FRAME AND FINISH OPENINGS FOR MECHANICAL AND ELECTRICAL SYSTEMS AS REQUIRED BY MECHANICAL/ELECTRICAL DOCUMENTS.

08 WALL TYPE LEGEND

N.T.S. DA801-08

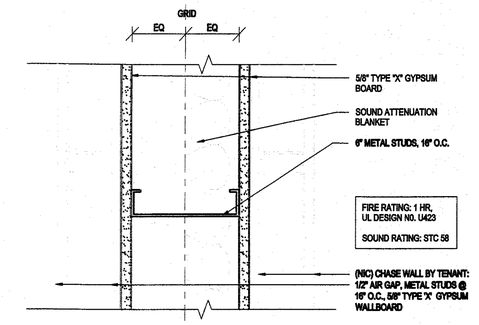

05 DEMISING WALL

3"=1'-0" DA801-05

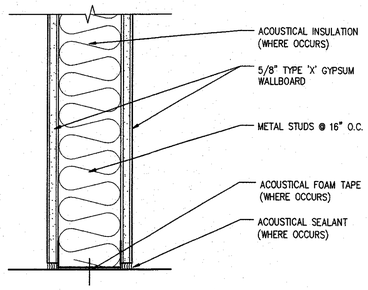

06 PARTITION WALL-NR

3"=1'-0" DA801-06

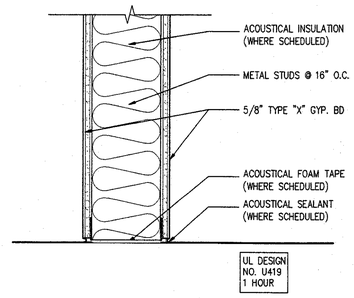

07 PARTITION WALL - 1 HR

3"=1'-0" DA801-07

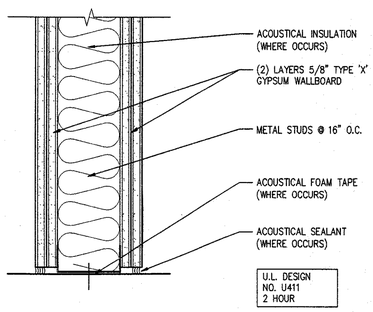

09 PARTITION WALL-2HR

3"=1'-0" DA801-09

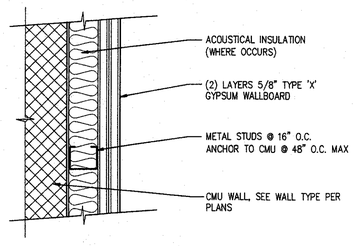

10 CMU FURRING WALL

3"=1'-0" DA801-10

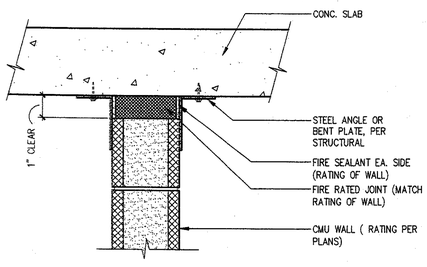

12 CMU WALL DEFLECTION HEAD

1 1/2"=1'-0" DA801-12

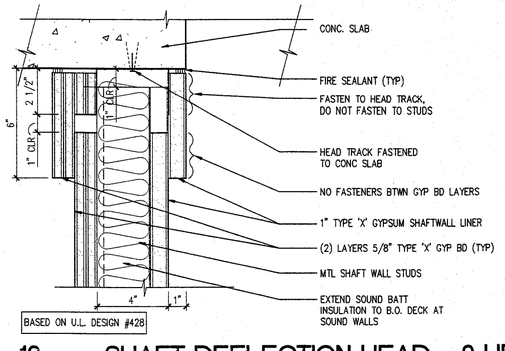

13 SHAFT DEFLECTION HEAD - 2 HR

3"=1'-0" DA801-13

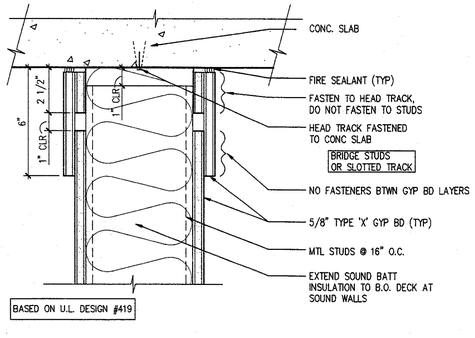

15 DEFLECTION HEAD - 1 HR

3"=1'-0" DA801-15

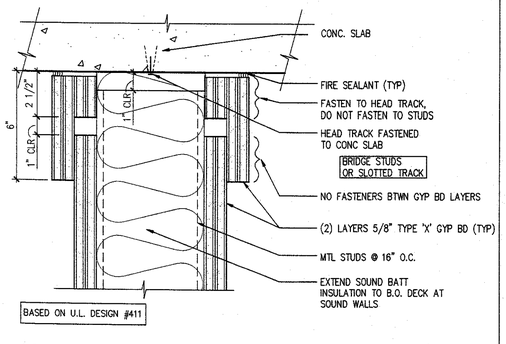

16 DEFLECTION HEAD - 2 HR

3"=1'-0" DA801-15

architecture company
sienna
411 sw sixth
portland, oregon
97204.1602
503.227.5616 v
503.227.3590 f

REGISTERED ARCHITECT
LEE R. WINN
PORTLAND, OR
STATE OF OREGON

RIVERS CONDOS

156 FRONT AVENUE
SALEM, OREGON
RIVERFRONT PARK LLC
429 COURT ST. NE
SALEM, OREGON 97301
project no:25094

CD/PERMIT SET	09.26.07
BUDGET SET	02.20.07
DESIGN DEVELOPMENT	10.10.06
DESIGN REVIEW	03.15.06
PRE-APP SET	03.09.06

© 2007 sienna architecture company
THESE DRAWINGS ARE THE PROPERTY OF SIENNA ARCHITECTURE COMPANY AND ARE NOT TO BE REPRODUCED IN ANY MANNER, EXCEPT WITH THE PRIOR WRITTEN PERMISSION OF SIENNA.

Drawn By Checked By Date

Sheet Title
WALL TYPES
INTERIOR DETAILS

Salem Fire Dept

Sheet Scale
AS SHOWN

Sheet No.
A801

City of Salem
Bldg. & Safety Div.

P:\2005\25094\Dwgs\ACAD\CURRENT\SHEET SET\25094-A801.dwg, 9/21/2007 12:40:37 PM, pdf, DWG to PDF.pc3, 1:1

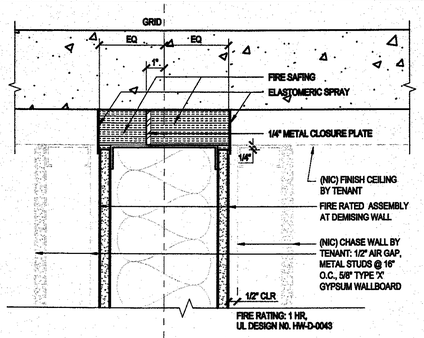

4 HEAD @ DEMISING WALL

3"=1'-0" DA802-04

architecture company
sienna
411 sw sixth
portland, oregon
97204.1602
503.227.5616 v
503.227.3590 f

REGISTERED ARCHITECT
LEE R. WINN
PORTLAND, OR
STATE OF OREGON

RIVERS CONDOS

156 FRONT AVENUE
SALEM, OREGON
RIVERFRONT PARK LLC
429 COURT ST. NE
SALEM, OREGON 97301

project no:25094

CD/PERMIT SET	09.26.07
BUDGET SET	02.20.07
DESIGN DEVELOPMENT	10.10.06
DESIGN REVIEW	03.15.06
PRE-APP SET	03.09.06

© 2007 sienna architecture company
THESE DRAWINGS ARE THE PROPERTY OF SIENNA ARCHITECTURE COMPANY AND ARE NOT TO BE REPRODUCED IN ANY MANNER, EXCEPT WITH THE PRIOR WRITTEN PERMISSION OF SIENNA.

Drawn By Checked By Date

Sheet Title
WALL TYPES

INTERIOR DETAILS

Sheet Scale
AS SHOWN

Sheet No.
A802

City of Salem
Bldg. & Safety Div.

H:\2005\25094\Images\ACADV\CURRENT\SHEET SET\25094-A802.dwg, 9/27/2007 12:52:57 PM, pdf, DWG to PDF.pc3, 1:1

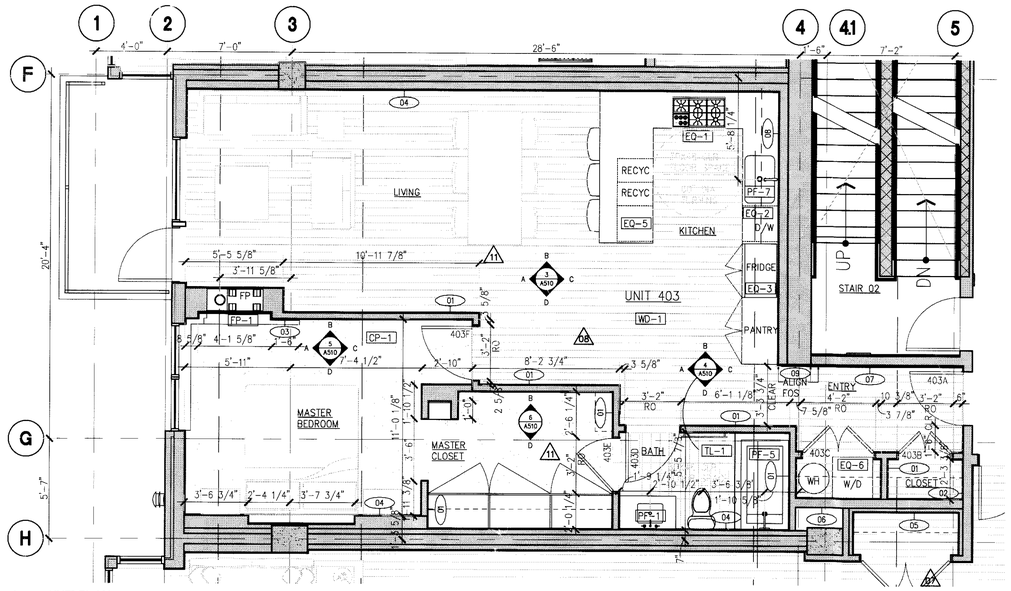

1 UNIT PLAN
1/4"=1'-0"

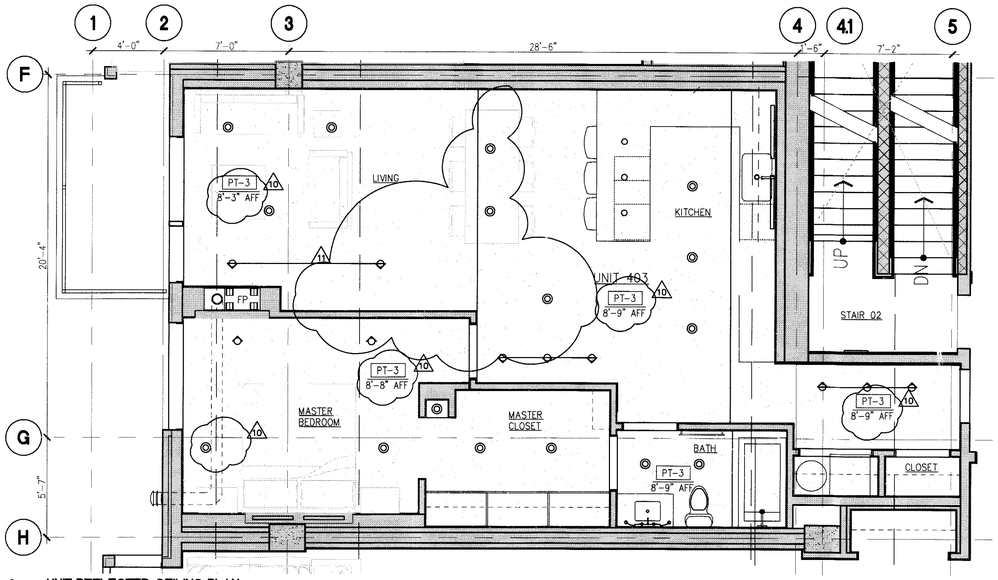

2 UNIT REFLECTED CEILING PLAN
1/4"=1'-0"

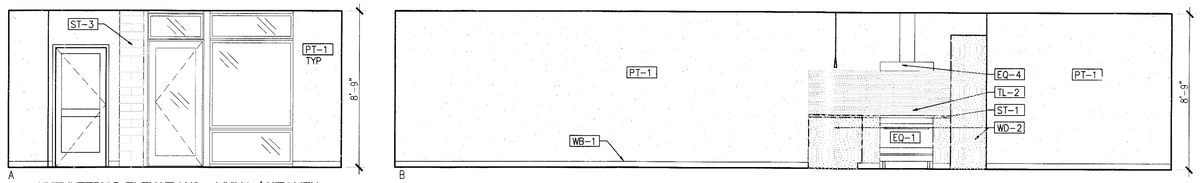

3 UNIT INTERIOR ELEVATIONS - LIVING / KITCHEN
1/4"=1'-0"

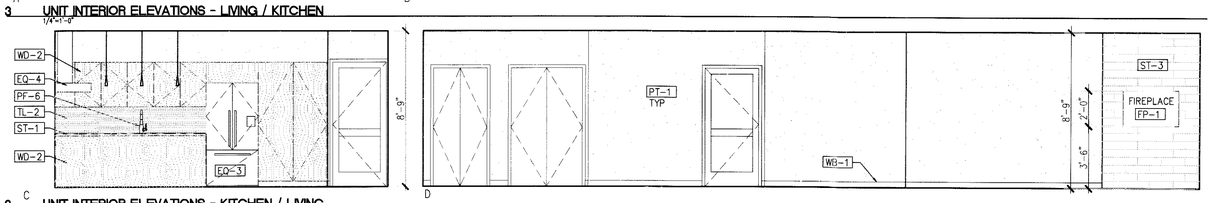

3 UNIT INTERIOR ELEVATIONS - KITCHEN / LIVING
1/4"=1'-0"

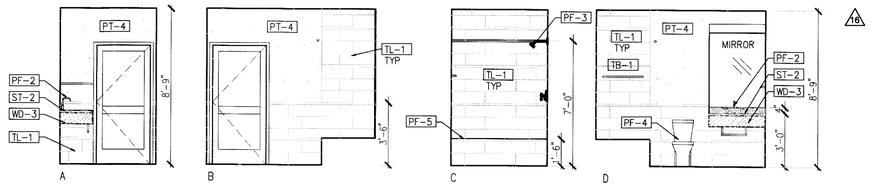

4 UNIT INTERIOR ELEVATIONS - BATH
1/4"=1'-0"

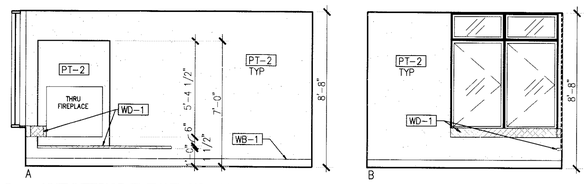

5 UNIT INTERIOR ELEVATIONS - MASTER BEDROOM
1/4"=1'-0"

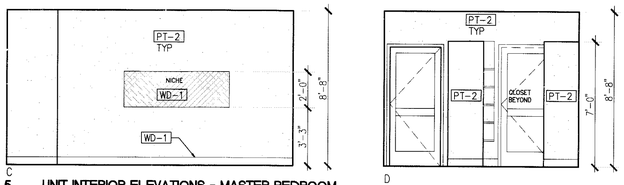

5 UNIT INTERIOR ELEVATIONS - MASTER BEDROOM
1/4"=1'-0"

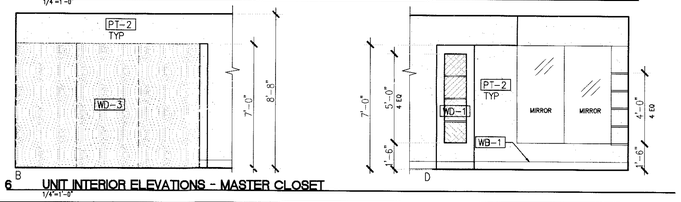

6 UNIT INTERIOR ELEVATIONS - MASTER CLOSET
1/4"=1'-0"

FIXTURE/FINISH SCHEDULE

TAG	ITEM	MANUFACTURER	PART/MODEL#	FINISH	SUPPLIER	CONTACT
CP-1	BEDROOM CARPET	XXX	XXXX	XXX	SURFACE	
EQ-1	36" GAS RANGE	FISHER & PAYKEL	OR36SDBGX1	STAINLESS STEEL	KELLY'S	
EQ-2	DRAWER DISHWASHER	FISHER & PAYKEL	DD605FD	STAINLESS STEEL	KELLY'S	
EQ-3	FRENCH DOOR REFRIG	FISHER & PAYKEL	RF201ADUX	STAINLESS STEEL	KELLY'S	
EQ-4	36" HOOD	BROAN	AP136SS	STAINLESS STEEL	KELLY'S	
EQ-5	COMPACTOR	BROAN	1052	STAINLESS STEEL	KELLY'S	
EQ-6	STACKED WASHER/DRYER	FRIGIDAIRE	GLTF2940FS & GLEQ2152ES	STAINLESS STEEL	KELLY'S	
FP-1	THRU FIREPLACE	HEAT & GLO	ST-550	XXX	HOME FIRE STOVE	
PF-1	BATHROOM SINK	XXX	XXXX	XXX	KOHLER	
PF-2	BATHROOM FAUCET	XXX	XXXX	XXX	KOHLER	
PF-3	BATH & SHOWER HEAD	XXX	XXXX	XXX	KOHLER	
PF-4	TOILET	XXX	XXXX	XXX	KOHLER	
PF-5	BATHTUB	XXX	XXXX	XXX	KOHLER	
PF-6	KITCHEN FAUCET	XXX	XXXX	XXX	KOHLER	
PF-7	KITCHEN SINK	XXX	XXXX	XXX	KOHLER	
TB-1	TOWEL BAR	XXX	XXXX	XXX	XXXX	
PT-1	TYP WALL PAINT	XXX	XXXX	XXX	SURFACE	
PT-2	BEDROOM WALL PAINT	XXX	XXXX	XXX	SURFACE	
PT-3	TYP CEILING PAINT	XXX	XXXX	XXX	SURFACE	
PT-4	BATHROOM PAINT	XXX	XXXX	XXX	SURFACE	
ST-1	KITCHEN COUNTER	XXX	XXXX	XXX	SURFACE	
ST-2	BATHROOM COUNTER	XXX	XXXX	XXX	SURFACE	
ST-3	FIREPLACE SURROUND	SLATE	XXXX	XXX	SURFACE	
ST-4	NICHE/FEATURE WALL	XXX	XXXX	XXX	SURFACE	
TL-1	BATHROOM TILE	XXX	XXXX	XXX	SURFACE	
TL-2	KITCHEN BACKSPLASH	XXX	XXXX	XXX	SURFACE	
WD-1	WOOD FLOORING	XXX	XXXX	XXX	SURFACE	
WD-2	KITCHEN CABINETS	XXX	XXXX	XXX	SURFACE	
WD-3	BATHROOM CABINETS	XXX	XXXX	XXX	SURFACE	
WB-1	WALL BASE	XXX	XXXX	XXX	SURFACE	

DOOR SCHEDULE

TAG	SPACE	TYPE	FRAME	WIDTH	HEIGHT	PART/MODEL#	FINISH	HARDWARE	SUPPLIER	CONTACT
403A	ENTRY	WD SOLID	XXX	3'-0"	7'-0"	XXX	XXX	XXX	ABS	
403B	CLOSET	WD SOLID	XXX	(2) 1'-6"	7'-0"	XXX	XXX	XXX	ABS	
403C	LAUNDRY	WD SOLID	XXX	(2) 2'-0"	7'-0"	XXX	XXX	XXX	ABS	
403D	BATH	WD SOLID	XXX	2'-6" 11	7'-0"	XXX	XXX	XXX	ABS	
403E	MASTER CLOSET	WD SOLID	XXX	2'-6"	7'-0"	XXX	XXX	XXX	ABS	
403F	MASTER BEDROOM	WD SOLID	XXX	2'-8"	7'-0"	XXX	XXX	XXX	ABS	

08

LIGHTING SCHEDULE

TAG	ITEM	MANUFACTURER	PART/MODEL#	FINISH	SUPPLIER
	RECESSED	WAC LIGHTING	R5VT-21	CLEAR WHITE FINISH	K&M ELECTRICAL
	ADJUSTABLE	WAC LIGHTING	QF-182	PLATINUM FINISH	K&M ELECTRICAL
	PENDENT	WAC LIGHTING	G913-CF	CLEAR FROSTED	K&M ELECTRICAL
	DOWNLIGHT	WAC LIGHTING	BA-X4	SATIN NICKEL	K&M ELECTRICAL
	MASTER VANITY	FORECAST LIGHTING	F4820-36	SATIN NICKEL	K&M ELECTRICAL
	BATH VANITY	HINKLEY LIGHTING	5923	CHROME FINISH	K&M ELECTRICAL

Umpqua

07 GENERAL NOTES

A. UNLESS OTHERWISE NOTED, DIMENSIONS ARE TO BUILDING GRID LINES, FACE OF STUD, FACE OF MASONRY, OR FACE OF CONCRETE WALLS.

B. DOORS AND CASED OPENINGS INDICATED ADJACENT TO WALL INTERSECTIONS SHALL BE LOCATED WITH THE EDGE OF THE FINISHED OPENING FOUR INCHES FROM THE ADJACENT WALL UNLESS OTHERWISE INDICATED. ALL OTHER DOORS AND CASED OPENINGS SHALL BE CENTERED BETWEEN NEAREST ADJACENT WALL INTERSECTIONS, UNLESS OTHERWISE DIMENSIONED.

C. CONDITIONS AND DETAILS MARKED "TYPICAL" SHALL APPLY IN ALL CASES, UNLESS SPECIFICALLY INDICATED OTHERWISE. TYPICAL DETAILS NOT REFERENCED ON DRAWINGS APPLY UNLESS NOTED OTHERWISE BY SPECIFIC NOTES AND DETAILS. WHERE NO SPECIFIC DETAIL IS SHOWN, THE CONSTRUCTION SHALL BE IDENTICAL OR SIMILAR TO THAT INDICATED FOR THE TYPICAL CONSTRUCTION ON THE PROJECT.

D. UNLESS OTHERWISE NOTED, LIGHTS/CEILING FIXTURES ARE CENTERED BOTH DIRECTIONS

riverfront park llc
designer: amy green
503.438.5411
amygreendesign@gmail.com

riverfront park llc
contractor: ben schouten
503.381.9522
ben.scout@gmail.com

RIVERS CONDOS

156 FRONT AVENUE
SALEM, OREGON
RIVERFRONT PARK LLC
429 COURT ST. NE
SALEM, OREGON 97301

Type

18	UNIT FAIR HOUSING REVS	03.26.09
11	UNIT TYPE-03 REVISIONS	03.05.09
10	FIRE PLACE VENTING REV	03.03.09
8	UNIT DOOR CHANGES	02.11.09
7	LEVEL 4 UNIT LAYOUTS	02.09.09
6	UNIT 403 ELECTRICAL	02.05.09
3	UNIT LAYOUTS	01.30.09

REFER TO SIENNA DRAWINGS FOR ADDITIONAL INFORMATION REGARDING SHELL CONSTRUCTION

Drawn By: AMG
Date: 07.30.09

Sheet Title
LEVEL 4:
UNIT 403 LAYOUT

Sheet Scale
AS SHOWN

Sheet No.
A510

McKenzie

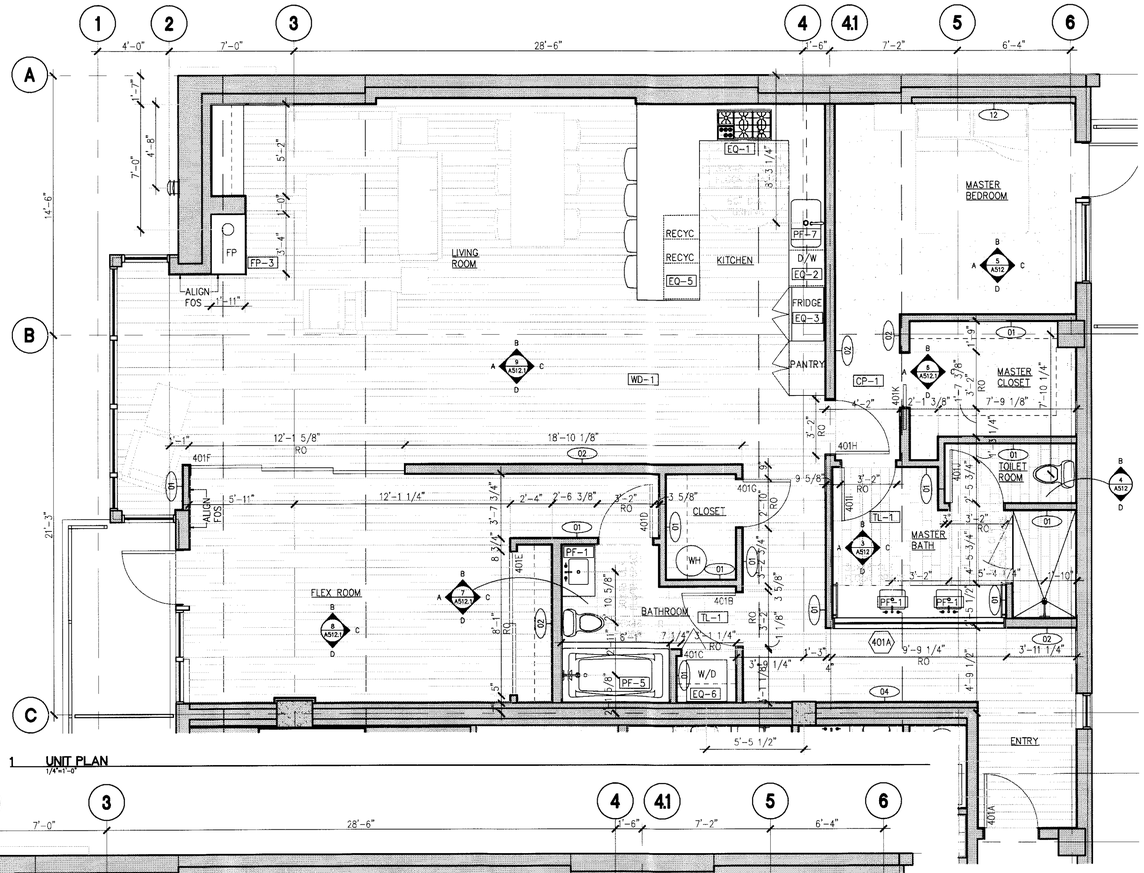

1 UNIT PLAN
1/4"=1'-0"

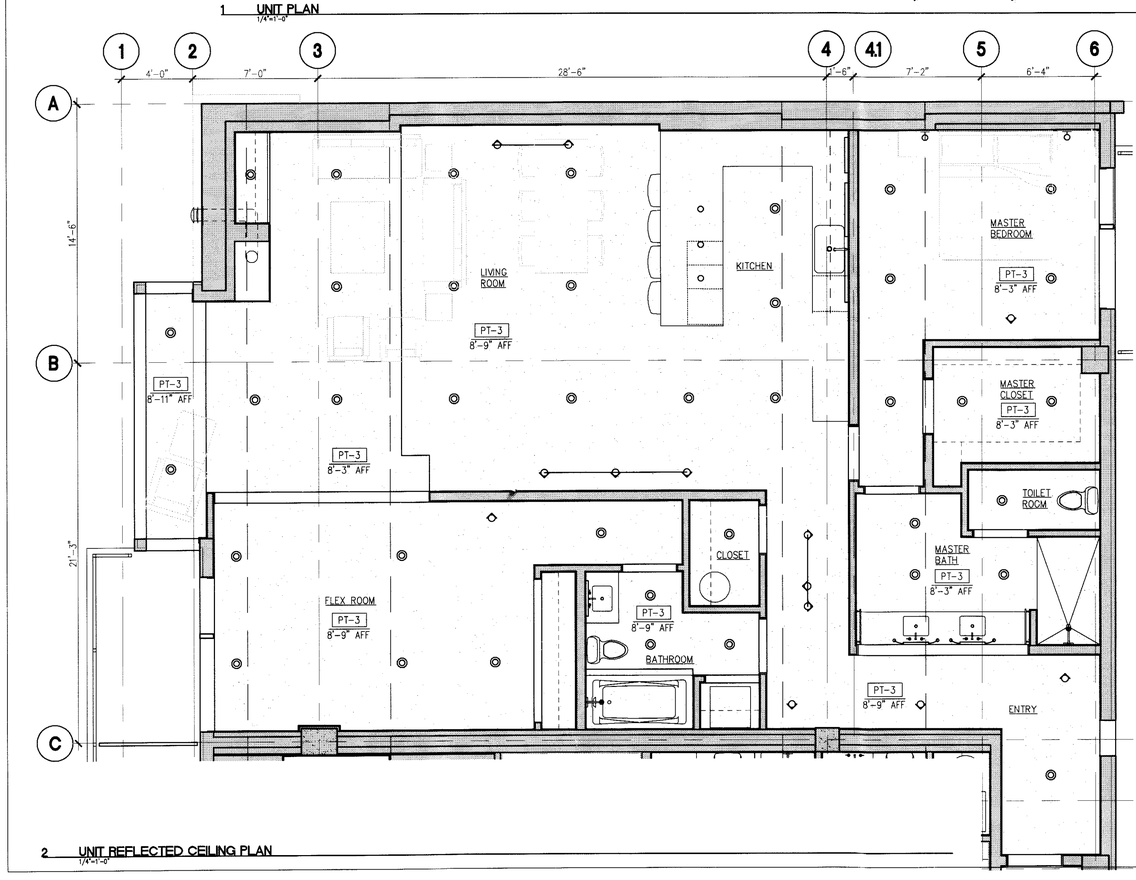

2 UNIT REFLECTED CEILING PLAN
1/4"=1'-0"

FIXTURE/FINISH SCHEDULE

TAG	ITEM	MANUFACTURER	PART/MODEL#	FINISH	SUPPLIER	CONTACT
CP-1	BEDROOM CARPET	XXX	XXXX	XXX	SURFACE	
EQ-1	36" GAS RANGE	FISHER & PAYKEL	OR36SDBGX1	STAINLESS STEEL	KELLY'S	
EQ-2	DRAWER DISHWASHER	FISHER & PAYKEL	DD605FD	STAINLESS STEEL	KELLY'S	
EQ-3	FRENCH DOOR REFRIG	FISHER & PAYKEL	RF201ADUX	STAINLESS STEEL	KELLY'S	
EQ-4	36" HOOD	BROAN	AP136SS	STAINLESS STEEL	KELLY'S	
EQ-5	COMPACTOR	BROAN	1052	STAINLESS STEEL	KELLY'S	
EQ-6	STACKED WASHER/DRYER	FRIGIDAIRE	GLTF2940FS & GLEQ2152ES	STAINLESS STEEL	KELLY'S	
FP-3	CORNER FIREPLACE	HEAT & GLO	XXXX	XXX	HOME FIRE STOVE	
PF-1	BATHROOM SINK	XXX	XXXX	XXX	KOHLER	
PF-2	BATHROOM FAUCET	XXX	XXXX	XXX	KOHLER	
PF-3	BATH & SHOWER HEAD	XXX	XXXX	XXX	KOHLER	
PF-4	TOILET	XXX	XXXX	XXX	KOHLER	
PF-5	BATHTUB	XXX	XXXX	XXX	KOHLER	
PF-6	KITCHEN FAUCET	XXX	XXXX	XXX	KOHLER	
PF-7	KITCHEN SINK	XXX	XXXX	XXX	KOHLER	
TB-1	TOWEL BAR	XXX	XXXX	XXX	XXXX	
PT-1	TYP WALL PAINT	XXX	XXXX	XXX	SURFACE	
PT-2	BEDROOM WALL PAINT	XXX	XXXX	XXX	SURFACE	
PT-3	TYP CEILING PAINT	XXX	XXXX	XXX	SURFACE	
PT-4	BATHROOM PAINT	XXX	XXXX	XXX	SURFACE	
ST-1	KITCHEN COUNTER	XXX	XXXX	XXX	SURFACE	
ST-2	BATHROOM COUNTER	XXX	XXXX	XXX	SURFACE	
ST-3	FIREPLACE SURROUND	SLATE	XXXX	XXX	SURFACE	
ST-4	NICHE/FEATURE WALL	XXX	XXXX	XXX	SURFACE	
TL-1	BATHROOM TILE	XXX	XXXX	XXX	SURFACE	
TL-2	KITCHEN BACKSPLASH	XXX	XXXX	XXX	SURFACE	
WD-1	WOOD FLOORING	XXX	XXXX	XXX	SURFACE	
WD-2	KITCHEN CABINETS	XXX	XXXX	XXX	SURFACE	
WD-3	BATHROOM CABINETS	XXX	XXXX	XXX	SURFACE	
WB-1	WALL BASE	XXX	XXXX	XXX	SURFACE	

DOOR SCHEDULE

TAG	SPACE	TYPE	FRAME	WIDTH	HEIGHT	PART/MODEL#	FINISH	HARDWARE	SUPPLIER	CONTACT
401A	ENTRY	WD SOLID	XXX	3'-0"	7'-0"	XXX	XXX	XXX	ABS	
401B	BATHROOM	WD SOLID	XXX	2'-8"	7'-0"	XXX	XXX	XXX	ABS	
401C	LAUNDRY	WD BIFOLD	XXX	3'-0"	7'-0"	XXX	XXX	XXX	ABS	
401D	BATHROOM	WD SOLID	XXX	2'-10"	7'-0"	XXX	XXX	XXX	ABS	
401E	CLOSET	WD SOLID	XXX	(2) 4'-0"	7'-0"	XXX	XXX	XXX	ABS	
401F	FLEX ROOM	WD SOLID	XXX	(3) 4'-4"	7'-0"	XXX	XXX	XXX	ABS	
401G	CLOSET	WD SOLID	XXX	2'-8"	7'-0"	XXX	XXX	XXX	ABS	
401H	MASTER BEDROOM	WD SOLID	XXX	3'-0"	7'-0"	XXX	XXX	XXX	ABS	
401I	MASTER BATHROOM	WD SOLID	XXX	2'-8"	7'-0"	XXX	XXX	XXX	ABS	
401J	TOILET ROOM	WD SOLID	XXX	2'-8"	7'-0"	XXX	XXX	XXX	ABS	
401K	MASTER CLOSET	POCKET	XXX	3'-0"	7'-0"	XXX	XXX	XXX	ABS	

REILTE SCHEDULE

TAG	SPACE	GLAZING	FRAME	WIDTH	HEIGHT	PART/MODEL#	FINISH	HARDWARE	SUPPLIER	CONTACT
401A	FOYER/MASTER BATH	XXX	XXX	X'-X"	2'-6"	XXX	XXX	XXX	XXX	

LIGHTING SCHEDULE

TAG	ITEM	MANUFACTURER	PART/MODEL#	FINISH	SUPPLIER
	RECESSED	WAC LIGHTING	R5VT-21	CLEAR WHITE FINISH	K&M ELECTRICAL
	ADJUSTABLE	WAC LIGHTING	QF-182	PLATINUM FINISH	K&M ELECTRICAL
	PENDENT	WAC LIGHTING	G913-CF	CLEAR FROSTED	K&M ELECTRICAL
	DOWNLIGHT	WAC LIGHTING	BA-X4	SATIN NICKEL	K&M ELECTRICAL
	MASTER VANITY	FORECAST LIGHTING	F4820-36	SATIN NICKEL	K&M ELECTRICAL
	BATH VANITY	HINKLEY LIGHTING	5923	CHROME FINISH	K&M ELECTRICAL

GENERAL NOTES

A. UNLESS OTHERWISE NOTED, DIMENSIONS ARE TO BUILDING GRID LINES, FACE OF STUD, FACE OF MASONRY, OR FACE OF CONCRETE WALLS.

B. DOORS AND CASED OPENINGS INDICATED ADJACENT TO WALL INTERSECTIONS SHALL BE LOCATED WITH THE EDGE OF THE FINISHED OPENING FOUR INCHES FROM THE ADJACENT WALL UNLESS OTHERWISE INDICATED. ALL OTHER DOORS AND CASED OPENINGS SHALL BE CENTERED BETWEEN NEAREST ADJACENT WALL INTERSECTIONS, UNLESS OTHERWISE DIMENSIONED.

C. CONDITIONS AND DETAILS MARKED "TYPICAL" SHALL APPLY IN ALL CASES, UNLESS SPECIFICALLY INDICATED OTHERWISE. TYPICAL DETAILS NOT REFERENCED ON DRAWINGS APPLY UNLESS NOTED OTHERWISE BY SPECIFIC NOTES AND DETAILS. WHERE NO SPECIFIC DETAIL IS SHOWN, THE CONSTRUCTION SHALL BE IDENTICAL OR SIMILAR TO THAT INDICATED FOR THE TYPICAL CONSTRUCTION ON THE PROJECT.

D. INTERIOR UNIT WALLS ARE 4" STUD, EXCEPT AT PLUMBING WALLS, WHICH ARE 6" STUD

E. UNLESS OTHERWISE NOTED, LIGHTS/CEILING FIXTURES ARE CENTERED BOTH DIRECTIONS

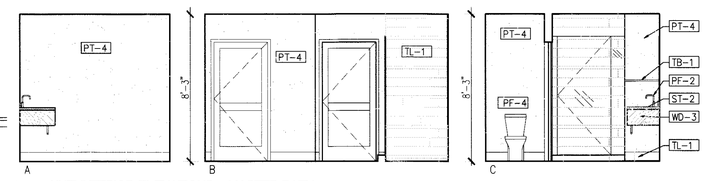

3 UNIT INTERIOR ELEVATIONS - MASTER BATH
1/4"=1'-0"

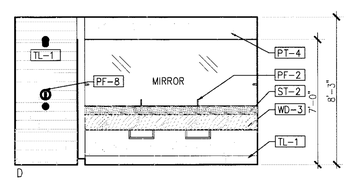

3 UNIT INTERIOR ELEVATIONS - MASTER BATH
1/4"=1'-0"

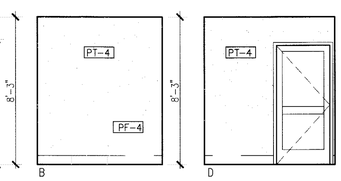

4 UNIT INTERIOR ELEVATIONS - TOILET ROOM
1/4"=1'-0"

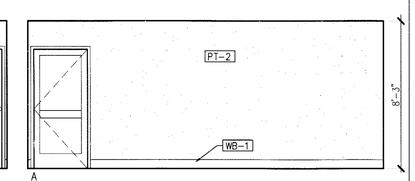

5 UNIT INTERIOR ELEVATIONS - MASTER BEDROOM
1/4"=1'-0"

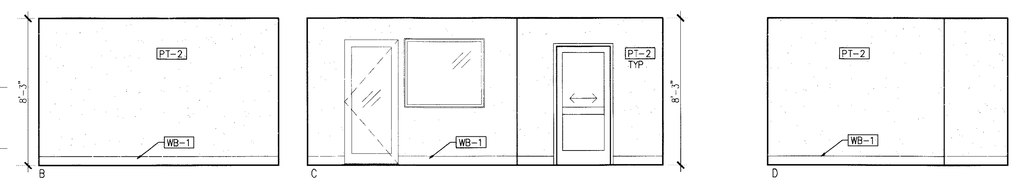

5 UNIT INTERIOR ELEVATIONS - MASTER BEDROOM
1/4"=1'-0"

riverfront park llc
designer: amy green
503.438.5411
amygreendesign@gmail.com

riverfront park llc
contractor: ben schouten
503.381.9522
ben.scout@gmail.com

RIVERS CONDOS

156 FRONT AVENUE
SALEM, OREGON
RIVERFRONT PARK LLC
429 COURT ST. NE
SALEM, OREGON 97301

REFER TO SIENNA DRAWINGS FOR ADDITIONAL INFORMATION REGARDING SHELL CONSTRUCTION

Drawn By: AMG
Date: 07.30.09

Sheet Title
LEVEL 4:
UNIT 401 LAYOUT

Sheet Scale
AS SHOWN

Sheet No.
A512

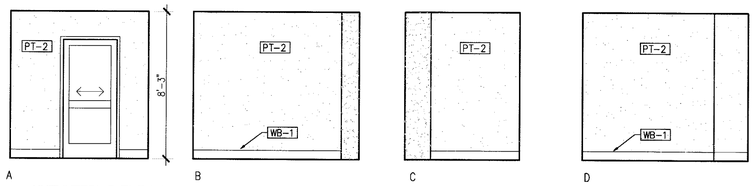

6 UNIT INTERIOR ELEVATIONS - MASTER CLOSET
1/4"=1'-0"

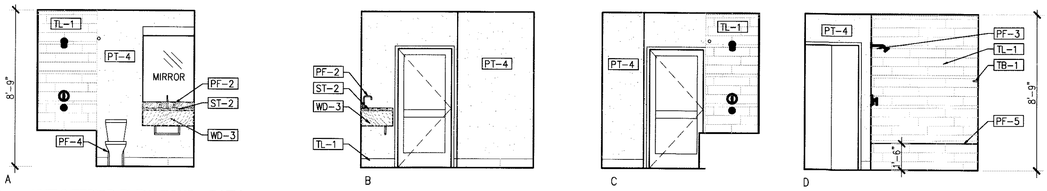

7 UNIT INTERIOR ELEVATIONS - BATH
1/4"=1'-0"

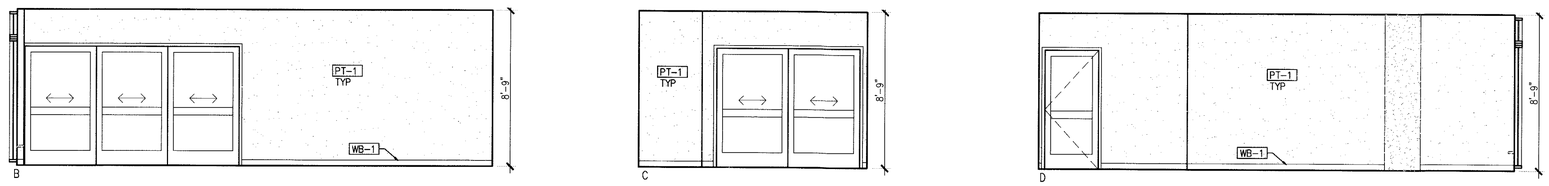

8 UNIT INTERIOR ELEVATIONS - FLEX ROOM
1/4"=1'-0"

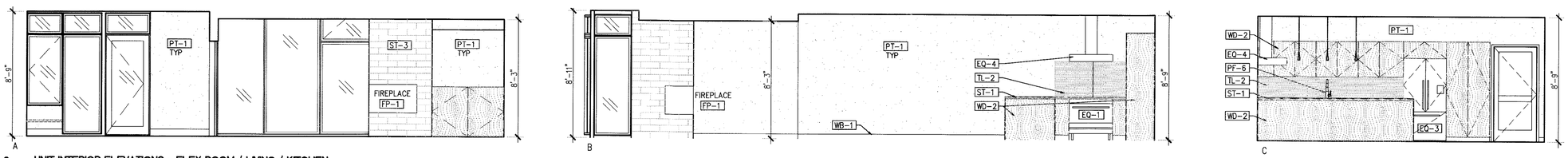

9 UNIT INTERIOR ELEVATIONS - FLEX ROOM / LIVING / KITCHEN
1/4"=1'-0"

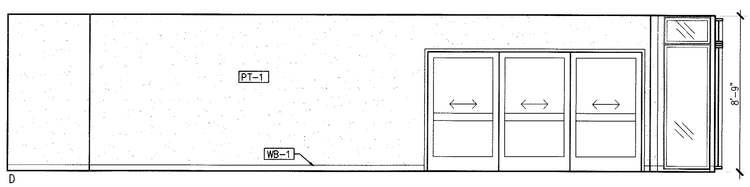

9 UNIT INTERIOR ELEVATIONS - KITCHEN / LIVING
1/4"=1'-0"

McKenzie

riverfront park llc
designer: amy green
503.438.5411
amygreendesign@gmail.com

riverfront park llc
contractor: ben schouten
503.381.9522
ben.scout@gmail.com

RIVERS CONDOS

156 FRONT AVENUE
SALEM, OREGON
RIVERFRONT PARK LLC
429 COURT ST. NE
SALEM, OREGON 97301

16 UNIT FAIR HOUSING REVS 03.26.09

REFER TO SIENNA DRAWINGS FOR ADDITIONAL INFORMATION REGARDING SHELL CONSTRUCTION

Drawn By: AMG
Date: 07.30.09

Sheet Title
LEVEL 4:
UNIT 401
INTERIOR ELEVATIONS

Sheet Scale
AS SHOWN

Sheet No.
A512.1

Rouge

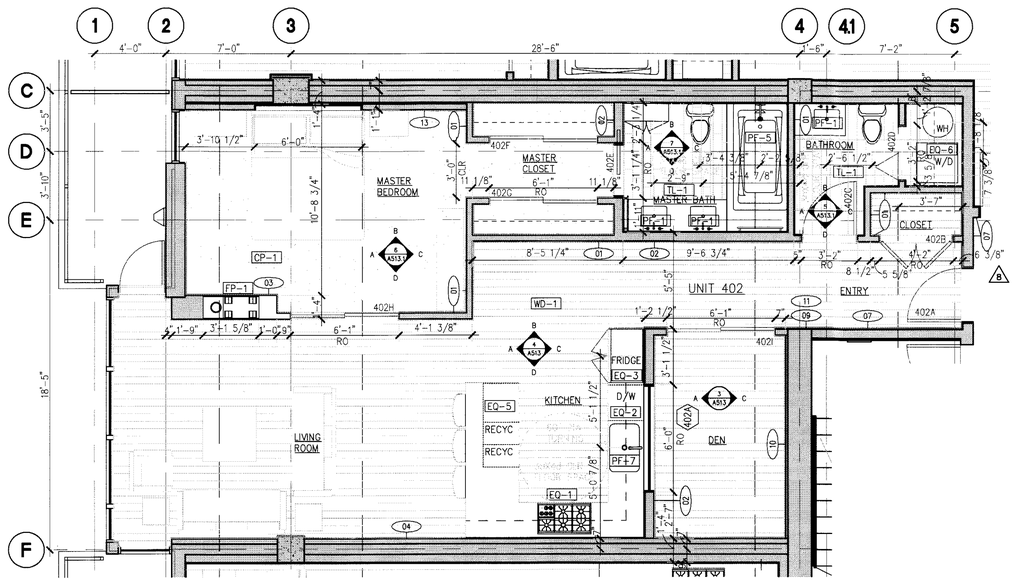

1 UNIT PLAN
1/4"=1'-0"

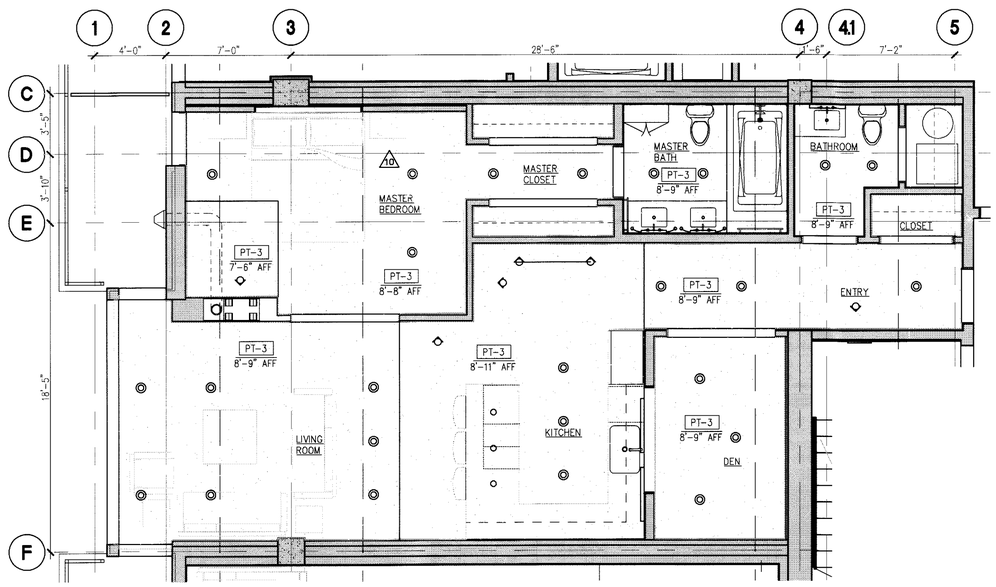

2 UNIT REFLECTED CEILING PLAN
1/4"=1'-0"

FIXTURE/FINISH SCHEDULE

TAG	ITEM	MANUFACTURER	PART/MODEL#	FINISH	SUPPLIER	CONTACT
CP-1	BEDROOM CARPET	XXX	XXXX	XXX	SURFACE	
EQ-1	36" GAS RANGE	FISHER & PAYKEL	OR36SDBGX1	STAINLESS STEEL	KELLY'S	
EQ-2	DRAWER DISHWASHER	FISHER & PAYKEL	DD605FD	STAINLESS STEEL	KELLY'S	
EQ-3	FRENCH DOOR REFRIG	FISHER & PAYKEL	RF201ADUX	STAINLESS STEEL	KELLY'S	
EQ-4	36" HOOD	BROAN	AP136SS	STAINLESS STEEL	KELLY'S	
EQ-5	COMPACTOR	BROAN	1052	STAINLESS STEEL	KELLY'S	
EQ-6	STACKED WASHER/DRYER	FRIGIDAIRE	GLTF2940FS & GLEQ2152ES	STAINLESS STEEL	KELLY'S	
FP-1	THRU FIREPLACE	HEAT & GLO	ST-550	XXX	HOME FIRE STOVE	
PF-1	BATHROOM SINK	XXX	XXXX	XXX	KOHLER	
PF-2	BATHROOM FAUCET	XXX	XXXX	XXX	KOHLER	
PF-3	BATH & SHOWER HEAD	XXX	XXXX	XXX	KOHLER	
PF-4	TOILET	XXX	XXXX	XXX	KOHLER	
PF-5	BATHTUB	XXX	XXXX	XXX	KOHLER	
PF-6	KITCHEN FAUCET	XXX	XXXX	XXX	KOHLER	
PF-7	KITCHEN SINK	XXX	XXXX	XXX	KOHLER	
TB-1	TOWEL BAR	XXX	XXXX	XXX	XXXX	
PT-1	TYP WALL PAINT	XXX	XXXX	XXX	SURFACE	
PT-2	BEDROOM WALL PAINT	XXX	XXXX	XXX	SURFACE	
PT-3	TYP CEILING PAINT	XXX	XXXX	XXX	SURFACE	
PT-4	BATHROOM PAINT	XXX	XXXX	XXX	SURFACE	
ST-1	KITCHEN COUNTER	XXX	XXXX	XXX	SURFACE	
ST-2	BATHROOM COUNTER	XXX	XXXX	XXX	SURFACE	
ST-3	FIREPLACE SURROUND	SLATE	XXXX	XXX	SURFACE	
ST-4	NICHE/FEATURE WALL	XXX	XXXX	XXX	SURFACE	
TL-1	BATHROOM TILE	XXX	XXXX	XXX	SURFACE	
TL-2	KITCHEN BACKSPLASH	XXX	XXXX	XXX	SURFACE	
WD-1	WOOD FLOORING	XXX	XXXX	XXX	SURFACE	
WD-2	KITCHEN CABINETS	XXX	XXXX	XXX	SURFACE	
WD-3	BATHROOM CABINETS	XXX	XXXX	XXX	SURFACE	
WB-1	WALL BASE	XXX	XXXX	XXX	SURFACE	

DOOR SCHEDULE

TAG	SPACE	TYPE	FRAME	WIDTH	HEIGHT	PART/MODEL#	FINISH	HARDWARE	SUPPLIER	CONTACT
402A	ENTRY	WD SOLID	XXX	3'-0"	7'-0"	XXX	XXX	XXX	XXX	XXX
402B	CLOSET	WD SOLID	XXX	(2) 2'-0"	7'-0"	XXX	XXX	XXX	XXX	XXX
402C	BATHROOM	WD SOLID	XXX	3'-0"	7'-0"	XXX	XXX	XXX	XXX	XXX
402D	LAUNDRY	WD BIFOLD	XXX	3'-0"	7'-0"	XXX	XXX	XXX	XXX	XXX
402E	MASTER CLOSET	WD POCKET	XXX	2'-6"	7'-0"	XXX	XXX	XXX	XXX	XXX
402F	MASTER BEDROOM	WD SLIDER	XXX	(2) 3'-0"	7'-0"	XXX	XXX	XXX	XXX	XXX
402G	MASTER BEDROOM	WD SLIDER	XXX	(2) 3'-0"	7'-0"	XXX	XXX	XXX	XXX	XXX
402H	MASTER BEDROOM	WD SLIDER	XXX	(2) 3'-0"	7'-0"	XXX	XXX	XXX	XXX	XXX
402I	MASTER BEDROOM	WD SLIDER	XXX	(2) 3'-0"	7'-0"	XXX	XXX	XXX	XXX	XXX

REILTE SCHEDULE

TAG	SPACE	GLAZING	FRAME	WIDTH	HEIGHT	PART/MODEL#	FINISH	HARDWARE	SUPPLIER	CONTACT
402A	DEN/KITCHEN	XXX	XXX	5'-10"	1'-9"	XXX	XXX	XXX	XXX	

LIGHTING SCHEDULE

TAG	ITEM	MANUFACTURER	PART/MODEL#	FINISH	SUPPLIER
◎	RECESSED	WAC LIGHTING	R5VT-21	CLEAR WHITE FINISH	K&M ELECTRICAL
◇	ADJUSTABLE	WAC LIGHTING	QF-182	PLATINUM FINISH	K&M ELECTRICAL
○	PENDENT	WAC LIGHTING	G913-CF	CLEAR FROSTED	K&M ELECTRICAL
▭	DOWNLIGHT	WAC LIGHTING	BA-X4	SATIN NICKEL	K&M ELECTRICAL
▭	MASTER VANITY	FORECAST LIGHTING	F4820-36	SATIN NICKEL	K&M ELECTRICAL
▭	BATH VANITY	HINKLEY LIGHTING	5923	CHROME FINISH	K&M ELECTRICAL

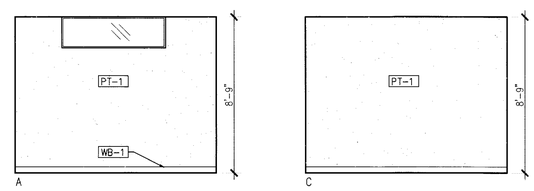

3 UNIT INTERIOR ELEVATIONS - A
1/4"=1'-0"

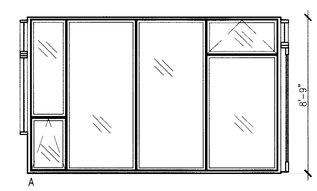

4 UNIT INTERIOR ELEVATIONS - LIVING
1/4"=1'-0"

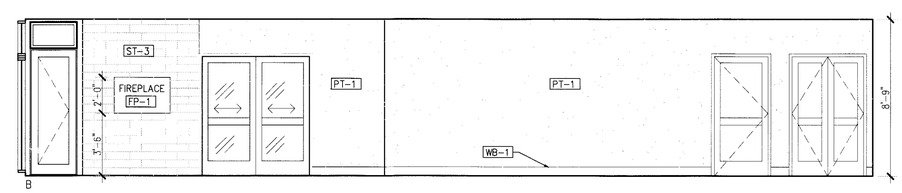

4 UNIT INTERIOR ELEVATIONS - LIVING
1/4"=1'-0"

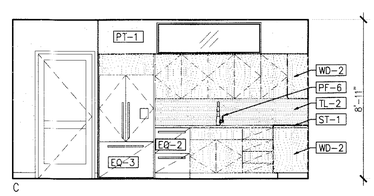

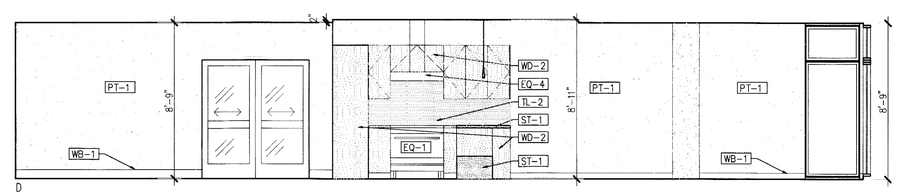

4 UNIT INTERIOR ELEVATIONS - LIVING / KITCHEN
1/4"=1'-0"

GENERAL NOTES

A. UNLESS OTHERWISE NOTED, DIMENSIONS ARE TO BUILDING GRID LINES, FACE OF STUD, FACE OF MASONRY, OR FACE OF CONCRETE WALLS.

B. DOORS AND CASED OPENINGS INDICATED ADJACENT TO WALL INTERSECTIONS SHALL BE LOCATED WITH THE EDGE OF THE FINISHED OPENING FOUR INCHES FROM THE ADJACENT WALL UNLESS OTHERWISE INDICATED. ALL OTHER DOORS AND CASED OPENINGS SHALL BE CENTERED BETWEEN NEAREST ADJACENT WALL INTERSECTIONS, UNLESS OTHERWISE DIMENSIONED.

C. CONDITIONS AND DETAILS MARKED "TYPICAL" SHALL APPLY IN ALL CASES, UNLESS SPECIFICALLY INDICATED OTHERWISE. TYPICAL DETAILS NOT REFERENCED ON DRAWINGS APPLY UNLESS NOTED OTHERWISE BY SPECIFIC NOTES AND DETAILS. WHERE NO SPECIFIC DETAIL IS SHOWN, THE CONSTRUCTION SHALL BE IDENTICAL OR SIMILAR TO THAT INDICATED FOR THE TYPICAL CONSTRUCTION ON THE PROJECT.

D. INTERIOR UNIT WALLS ARE 4" STUD, EXCEPT AT PLUMBING WALLS, WHICH ARE 6" STUD

E. UNLESS OTHERWISE NOTED, LIGHTS/CEILING FIXTURES ARE CENTERED BOTH DIRECTIONS

riverfront park llc
designer: amy green
503.438.5411
amygreendesign@gmail.com

riverfront park llc
contractor: ben schouten
503.381.9522
ben.scout@gmail.com

RIVERS CONDOS

156 FRONT AVENUE
SALEM, OREGON
RIVERFRONT PARK LLC
429 COURT ST. NE
SALEM, OREGON 97301

202

Type

- 18 UNIT FAIR HOUSING REVS 03.26.09
- 10 FIREPLACE VENTING REV 03.03.09
- 8 UNIT DOOR CHANGES 02.11.09
- 7 LEVEL 4 UNIT LAYOUTS 02.09.09

REFER TO SIENNA DRAWINGS FOR ADDITIONAL INFORMATION REGARDING SHELL CONSTRUCTION

Drawn By: AMG
Date: 07.30.09

Sheet Title
LEVEL 4:
UNIT 402 LAYOUT

Sheet Scale
AS SHOWN

Sheet No.
A513

Rouge

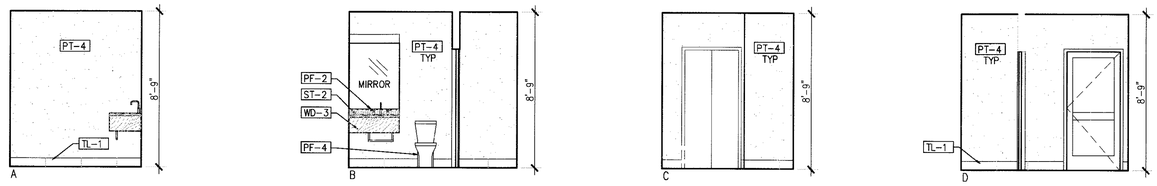

5 UNIT INTERIOR ELEVATIONS - BATH
1/4"=1'-0"

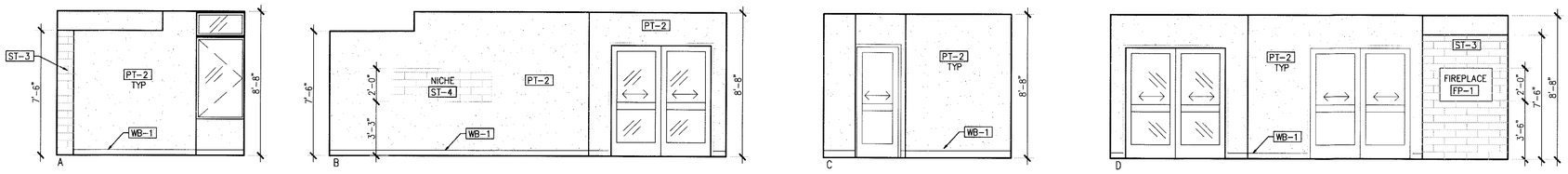

6 UNIT INTERIOR ELEVATIONS - MASTER BEDROOM
1/4"=1'-0"

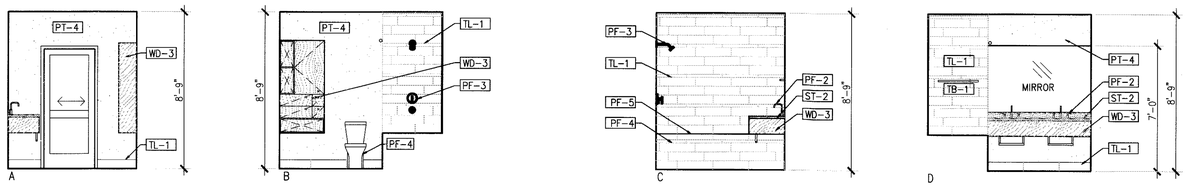

7 UNIT INTERIOR ELEVATIONS - MASTER BATH
1/4"=1'-0"

riverfront park llc
designer: amy green
503.438.5411
amygreendesign@gmail.com

riverfront park llc
contractor: ben schouten
503.381.9522
ben.scout@gmail.com

RIVERS CONDOS

156 FRONT AVENUE
SALEM, OREGON
RIVERFRONT PARK LLC
429 COURT ST. NE
SALEM, OREGON 97301

402

16 UNIT FAIR HOUSING REVS 03.26.09

REFER TO SIENNA DRAWINGS FOR ADDITIONAL INFORMATION REGARDING SHELL CONSTRUCTION

Drawn By: AMG
Date: 07.30.09

Sheet Title
LEVEL 4:
UNIT 402
INTERIOR ELEVATIONS

Sheet Scale
AS SHOWN

Sheet No.
A513.1

Deschutes

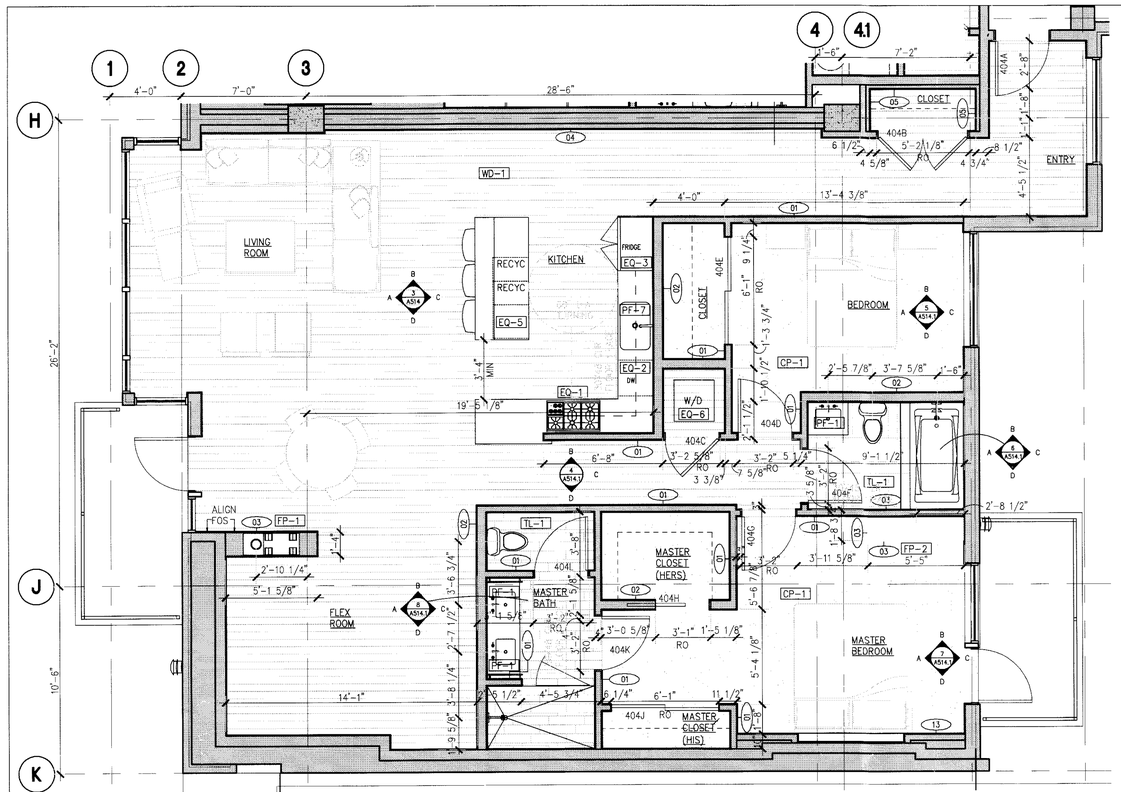

1 UNIT PLAN
1/4"=1'-0"

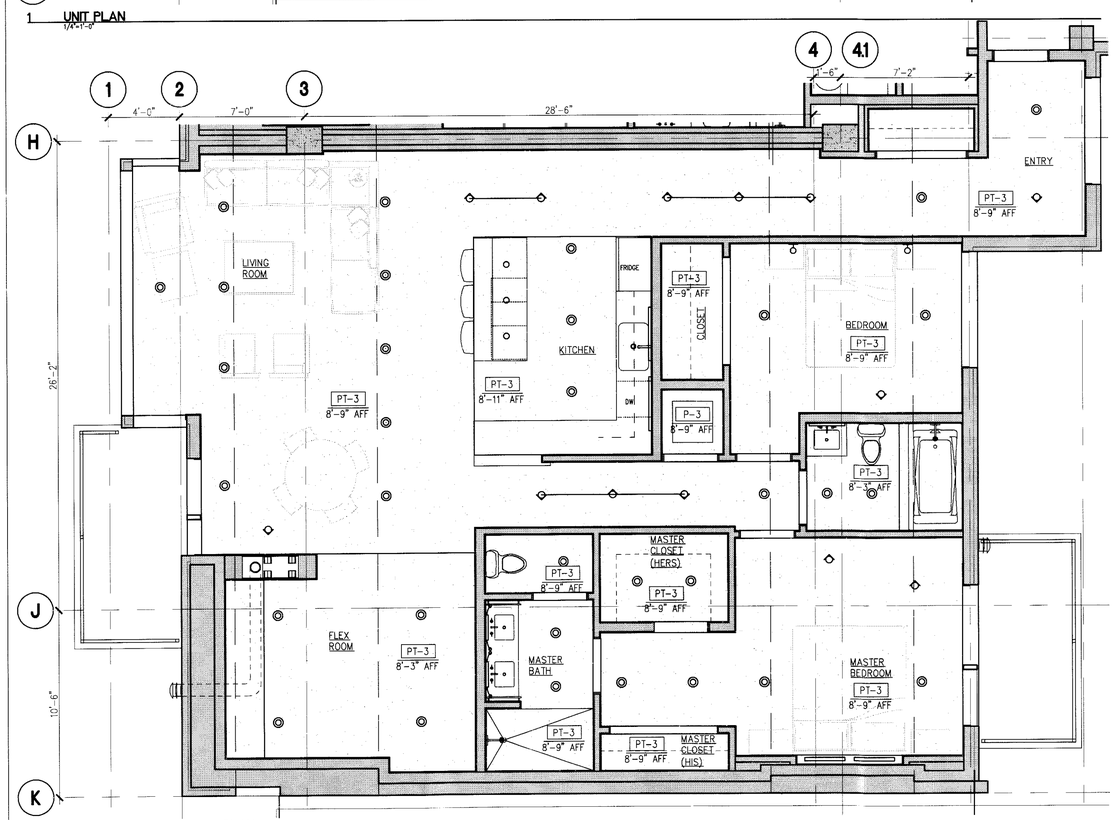

2 UNIT REFLECTED CEILING PLAN
1/4"=1'-0"

FIXTURE/FINISH SCHEDULE

TAG	ITEM	MANUFACTURER	PART/MODEL#	FINISH	SUPPLIER	CONTACT
CP-1	BEDROOM CARPET	XXX	XXXX	XXX	SURFACE	
EQ-1	36" GAS RANGE	FISHER & PAYKEL	OR36SDBGX1	STAINLESS STEEL	KELLY'S	
EQ-2	DRAWER DISHWASHER	FISHER & PAYKEL	DD605FD	STAINLESS STEEL	KELLY'S	
EQ-3	FRENCH DOOR REFRIG	FISHER & PAYKEL	RF201ADUX	STAINLESS STEEL	KELLY'S	
EQ-4	36" HOOD	BROAN	AP136SS	STAINLESS STEEL	KELLY'S	
EQ-5	COMPACTOR	BROAN	1052	STAINLESS STEEL	KELLY'S	
EQ-6	STACKED WASHER/DRYER	FRIGIDAIRE	GLTF2940FS & GLEQ2152ES	STAINLESS STEEL	KELLY'S	
FP-1	THRU FIREPLACE	HEAT & GLO	ST-550	XXX	HOME FIRE STOVE	
FP-2	FIREPLACE	HEAT & GLO	XXXX	XXX	HOME FIRE STOVE	
PF-1	BATHROOM SINK	XXX	XXXX	XXX	KOHLER	
PF-2	BATHROOM FAUCET	XXX	XXXX	XXX	KOHLER	
PF-3	BATH & SHOWER HEAD	XXX	XXXX	XXX	KOHLER	
PF-4	TOILET	XXX	XXXX	XXX	KOHLER	
PF-5	BATHTUB	XXX	XXXX	XXX	KOHLER	
PF-6	KITCHEN FAUCET	XXX	XXXX	XXX	KOHLER	
PF-7	KITCHEN SINK	XXX	XXXX	XXX	XXXX	
PF-8	BATH TOWEL BAR	XXX	XXXX	XXX	KOHLER	
PT-1	TYP WALL PAINT	XXX	XXXX	XXX	SURFACE	
PT-2	BEDROOM WALL PAINT	XXX	XXXX	XXX	SURFACE	
PT-3	TYP CEILING PAINT	XXX	XXXX	XXX	SURFACE	
PT-4	BATHROOM PAINT	XXX	XXXX	XXX	SURFACE	
ST-1	KITCHEN COUNTER	XXX	XXXX	XXX	SURFACE	
ST-2	BATHROOM COUNTER	XXX	XXXX	XXX	SURFACE	
ST-3	FIREPLACE SURROUND	SLATE	XXXX	XXX	SURFACE	
ST-4	NICHE/FEATURE WALL	XXX	XXXX	XXX	SURFACE	
TL-1	BATHROOM TILE	XXX	XXXX	XXX	SURFACE	
TL-2	KITCHEN BACKSPLASH	XXX	XXXX	XXX	SURFACE	
WD-1	WOOD FLOORING	XXX	XXXX	XXX	SURFACE	
WD-2	KITCHEN CABINETS	XXX	XXXX	XXX	SURFACE	
WD-3	BATHROOM CABINETS	XXX	XXXX	XXX	SURFACE	
WB-1	WALL BASE	XXX	XXXX	XXX	SURFACE	

DOOR SCHEDULE

TAG	SPACE	TYPE	FRAME	WIDTH	HEIGHT	PART/MODEL#	FINISH	HARDWARE	SUPPLIER	CONTACT
404A	ENTRY	WD SOLID	XXX	3'-0"	7'-0"	XXX	XXX	XXX	XXX	XXX
404B	CLOSET	WD SOLID	XXX	(2) 2'-2"	6'-8"	XXX	XXX	XXX	XXX	XXX
404C	LAUNDRY	WD SOLID	XXX	3'-0"	6'-8"	XXX	XXX	XXX	XXX	XXX
404D	BEDROOM	WD	XXX	3'-0"	6'-8"	XXX	XXX	XXX	XXX	XXX
404E	BEDROOM	WD SLIDER	XXX	(2) 3'-0"	6'-8"	XXX	XXX	XXX	XXX	XXX
404F	BATHROOM	WD	XXX	3'-0"	6'-8"	XXX	XXX	XXX	XXX	XXX
404G	MASTER BEDROOM	WD	XXX	3'-0"	6'-8"	XXX	XXX	XXX	XXX	XXX
404H	MASTER CLOSET (HERS)	WD SLIDER	XXX	3'-0"	6'-8"	XXX	XXX	XXX	XXX	XXX
404J	MASTER CLOSET (HIS)	WD SLIDER	XXX	(2) 3'-0"	6'-8"	XXX	XXX	XXX	XXX	XXX
404K	MASTER BATH	WD	XXX	3'-0"	6'-8"	XXX	XXX	XXX	XXX	XXX
404L	MASTER BATH	WD POCKET	XXX	3'-0"	6'-8"	XXX	XXX			

LIGHTING SCHEDULE

TAG	ITEM	MANUFACTURER	PART/MODEL#	FINISH	SUPPLIER
◎	RECESSED	WAC LIGHTING	R5VT-21	CLEAR WHITE FINISH	K&M ELECTRICAL
◇	ADJUSTABLE	WAC LIGHTING	QF-182	PLATINUM FINISH	K&M ELECTRICAL
○	PENDENT	WAC LIGHTING	G913-CF	CLEAR FROSTED	K&M ELECTRICAL
▭	DOWNLIGHT	WAC LIGHTING	BA-X4	SATIN NICKEL	K&M ELECTRICAL
	MASTER VANITY	FORECAST LIGHTING	F4820-36	SATIN NICKEL	K&M ELECTRICAL
▭	BATH VANITY	HINKLEY LIGHTING	5923	CHROME FINISH	K&M ELECTRICAL

GENERAL NOTES

A. UNLESS OTHERWISE NOTED, DIMENSIONS ARE TO BUILDING GRID LINES, FACE OF STUD, FACE OF MASONRY, OR FACE OF CONCRETE WALLS.

B. DOORS AND CASED OPENINGS INDICATED ADJACENT TO WALL INTERSECTIONS SHALL BE LOCATED WITH THE EDGE OF THE FINISHED OPENING FOUR INCHES FROM THE ADJACENT WALL UNLESS OTHERWISE INDICATED. ALL OTHER DOORS AND CASED OPENINGS SHALL BE CENTERED BETWEEN NEAREST ADJACENT WALL INTERSECTIONS, UNLESS OTHERWISE DIMENSIONED.

C. CONDITIONS AND DETAILS MARKED "TYPICAL" SHALL APPLY IN ALL CASES, UNLESS SPECIFICALLY INDICATED OTHERWISE. TYPICAL DETAILS NOT REFERENCED ON DRAWINGS APPLY UNLESS NOTED OTHERWISE BY SPECIFIC NOTES AND DETAILS. WHERE NO SPECIFIC DETAIL IS SHOWN, THE CONSTRUCTION SHALL BE IDENTICAL OR SIMILAR TO THAT INDICATED FOR THE TYPICAL CONSTRUCTION ON THE PROJECT.

D. INTERIOR UNIT WALLS ARE 4" STUD, EXCEPT AT PLUMBING WALLS, WHICH ARE 6" STUD

E. UNLESS OTHERWISE NOTED, LIGHTS/CEILING FIXTURES ARE CENTERED BOTH DIRECTIONS

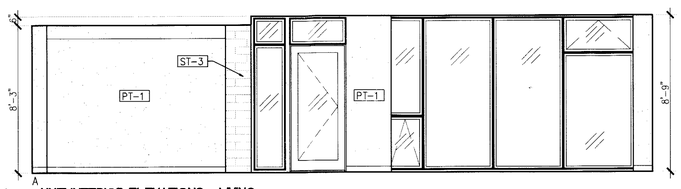

3 UNIT INTERIOR ELEVATIONS - LIVING
1/4"=1'-0"

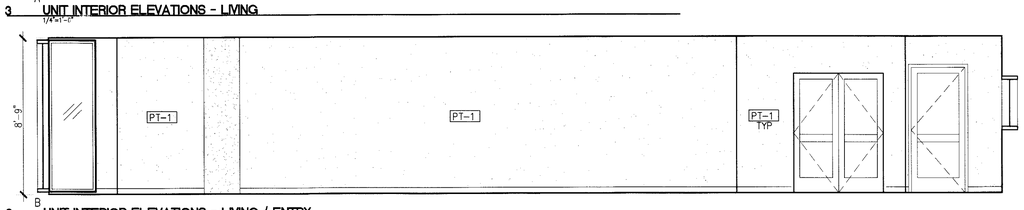

3 UNIT INTERIOR ELEVATIONS - LIVING / ENTRY
1/4"=1'-0"

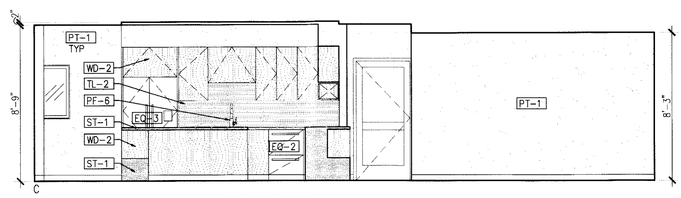

3 UNIT INTERIOR ELEVATIONS - KITCHEN / LIVING
1/4"=1'-0"

riverfront park llc
designer: amy green
503.438.5411
amygreendesign@gmail.com

riverfront park llc
contractor: ben schouten
503.381.9522
ben.scout@gmail.com

RIVERS CONDOS

156 FRONT AVENUE
SALEM, OREGON
RIVERFRONT PARK LLC
429 COURT ST. NE
SALEM, OREGON 97301

404

REFER TO SIENNA DRAWINGS FOR ADDITIONAL INFORMATION REGARDING SHELL CONSTRUCTION

Drawn By: AMG
Date: 07.30.09

Sheet Title
LEVEL 4:
UNIT 404 LAYOUT

Sheet Scale
AS SHOWN

Sheet No.
A514

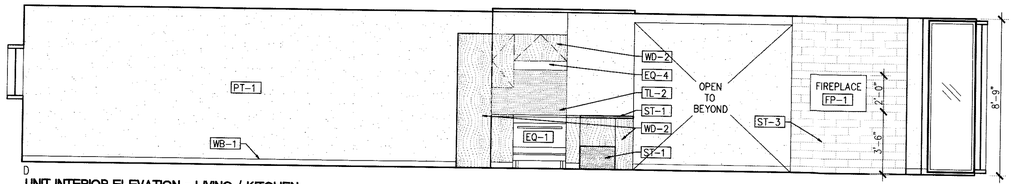

3 UNIT INTERIOR ELEVATION - LIVING / KITCHEN
1/4"=1'-0"

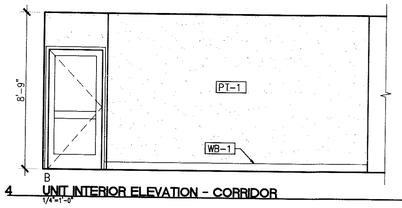

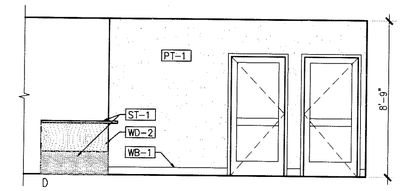

4 UNIT INTERIOR ELEVATION - CORRIDOR
1/4"=1'-0"

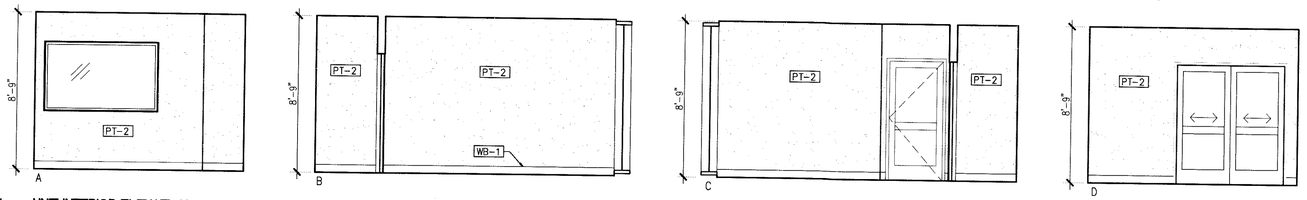

5 UNIT INTERIOR ELEVATION - A
1/4"=1'-0"

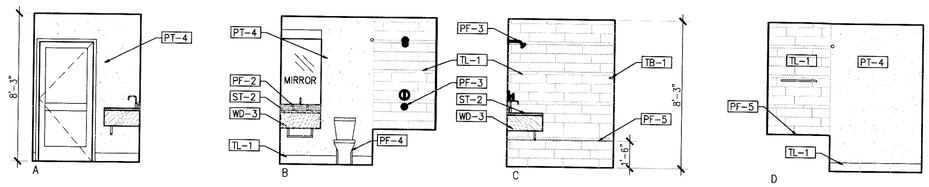

6 UNIT INTERIOR ELEVATION - BATH
1/4"=1'-0"

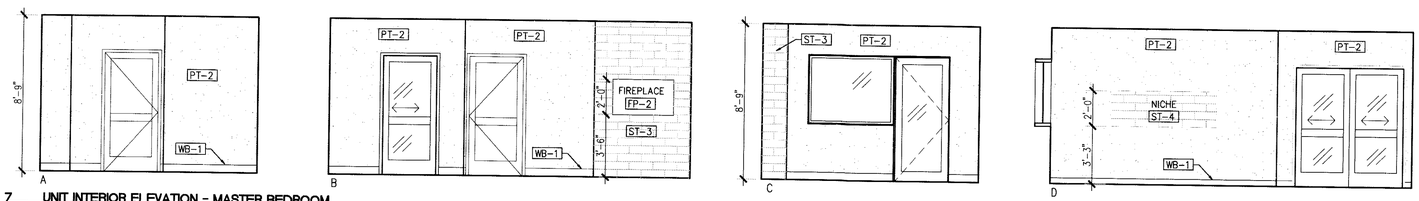

7 UNIT INTERIOR ELEVATION - MASTER BEDROOM
1/4"=1'-0"

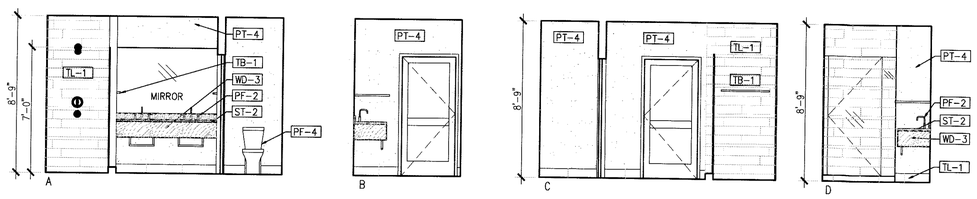

8 UNIT INTERIOR ELEVATION - MASTER BATH
1/4"=1'-0"

Deschutes

riverfront park llc
designer: amy green
503.438.5411
amygreendesign@gmail.com

riverfront park llc
contractor: ben schouten
503.381.9522
ben.scout@gmail.com

RIVERS CONDOS

156 FRONT AVENUE
SALEM, OREGON
RIVERFRONT PARK LLC
429 COURT ST. NE
SALEM, OREGON 97301

404

16 UNIT FAIR HOUSING REVS 03.26.09

REFER TO SIENNA DRAWINGS FOR ADDITIONAL INFORMATION REGARDING SHELL CONSTRUCTION

Drawn By: AMG
Date: 07.30.09

Sheet Title
LEVEL 4
UNIT 404
INTERIOR ELEVATIONS

Sheet Scale
AS SHOWN

Sheet No.
A514.1