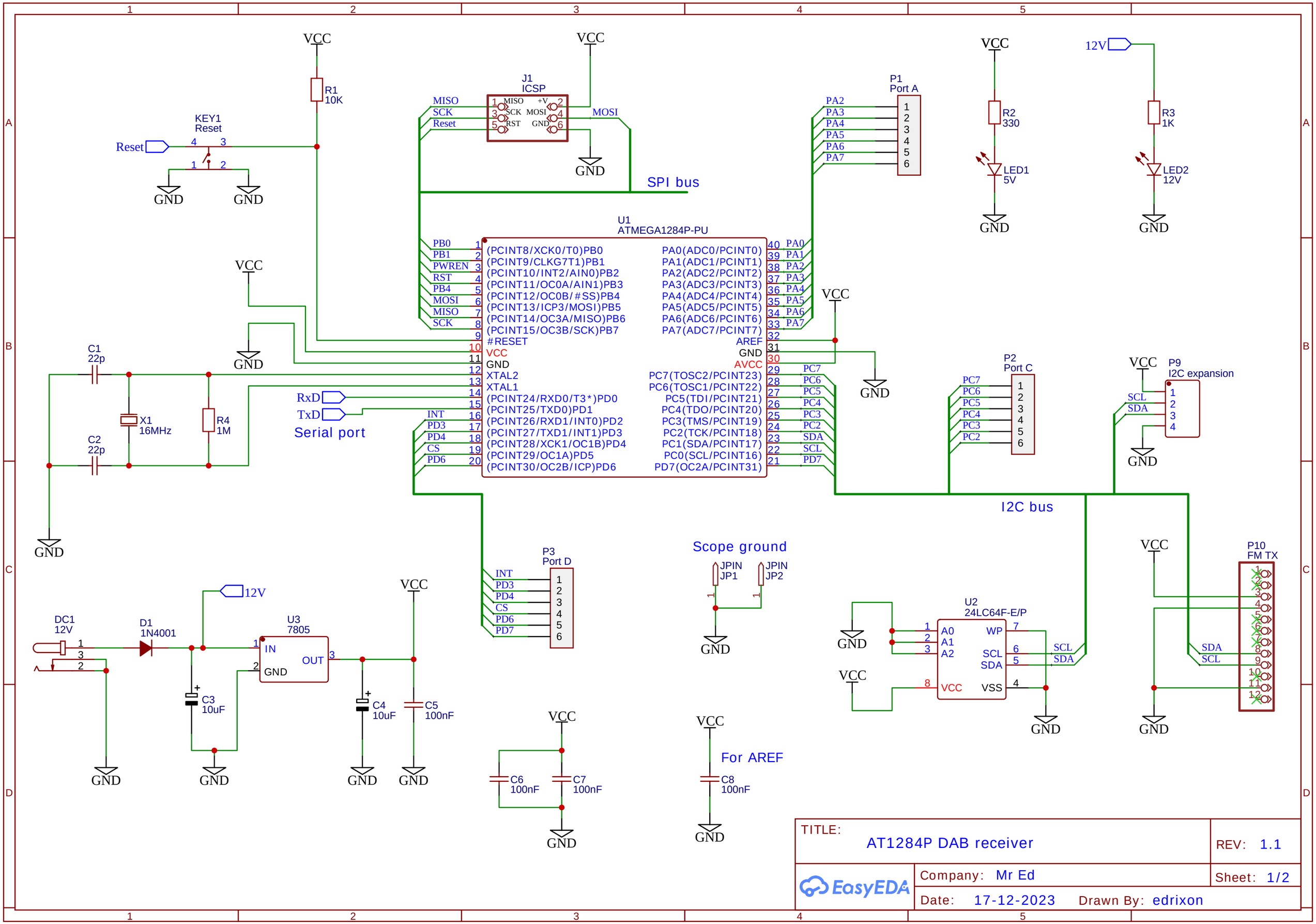
VCC
R1
10K
KEY1
Reset
Reset
GND
J1
ICSP
MISO
SCK
Reset
MISO
+V
SCK
MOSI
RST
GND
MOSI
SPI bus
P1
Port A
PA2
PA3
PA4
PA5
PA6
PA7
R2
330
LED1
5V
12V
R3
1K
LED2
12V
U1
ATMEGA1284P-PU
PB0
PB1
PWREN
RST
PB4
MOSI
MISO
SCK
(PCINT8/XCK0/T0)PB0
(PCINT9/CLKG7T1)PB1
(PCINT10/INT2/AIN0)PB2
(PCINT11/OC0A/AIN1)PB3
(PCINT12/OC0B/#SS)PB4
(PCINT13/ICP3/MOSI)PB5
(PCINT14/OC3A/MISO)PB6
(PCINT15/OC3B/SCK)PB7
#RESET
VCC
GND
XTAL2
XTAL1
(PCINT24/RXD0/T3*)PD0
(PCINT25/TXD0)PD1
(PCINT26/RXD1/INT0)PD2
(PCINT27/TXD1/INT1)PD3
(PCINT28/XCK1/OC1B)PD4
(PCINT29/OC1A)PD5
(PCINT30/OC2B/ICP)PD6
PA0(ADC0/PCINT0)
PA1(ADC1/PCINT1)
PA2(ADC2/PCINT2)
PA3(ADC3/PCINT3)
PA4(ADC4/PCINT4)
PA5(ADC5/PCINT5)
PA6(ADC6/PCINT6)
PA7(ADC7/PCINT7)
AREF
GND
AVCC
PC7(TOSC2/PCINT23)
PC6(TOSC1/PCINT22)
PC5(TDI/PCINT21)
PC4(TDO/PCINT20)
PC3(TMS/PCINT19)
PC2(TCK/PCINT18)
PC1(SDA/PCINT17)
PC0(SCL/PCINT16)
PD7(OC2A/PCINT31)
INT
PD3
PD4
CS
PD6
PC7
PC6
PC5
PC4
PC3
PC2
SDA
SCL
PD7
C1
22p
C2
22p
X1
16MHz
R4
1M
RxD
TxD
Serial port
P2
Port C
P9
I2C expansion
SCL
SDA
I2C bus
P3
Port D
Scope ground
JPIN
JP1
JPIN
JP2
DC1
12V
D1
1N4001
U3
7805
IN
OUT
GND
C3
10uF
C4
10uF
C5
100nF
C6
100nF
C7
100nF
For AREF
C8
100nF
U2
24LC64F-E/P
A0
A1
A2
WP
SCL
SDA
VCC
VSS
P10
FM TX
TITLE:
AT1284P DAB receiver
REV: 1.1
Company: Mr Ed
Sheet: 1/2
Date: 17-12-2023
Drawn By: edrixon
EasyEDA

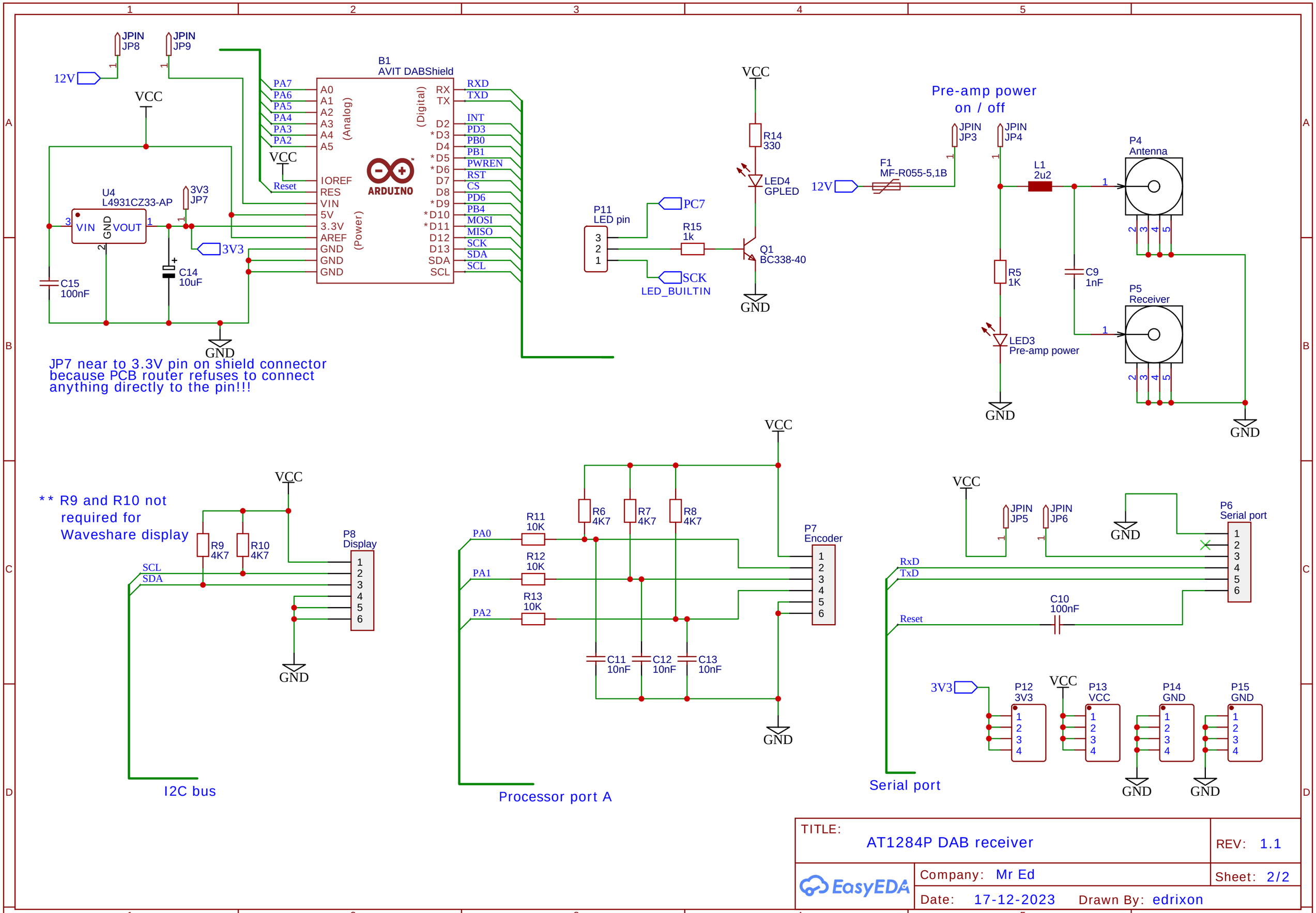

TITLE: AT1284P DAB receiver	REV: 1.1
EasyEDA — Company: Mr Ed	Sheet: 2/2
Date: 17-12-2023	Drawn By: edrixon