Модуль KM01-KL10

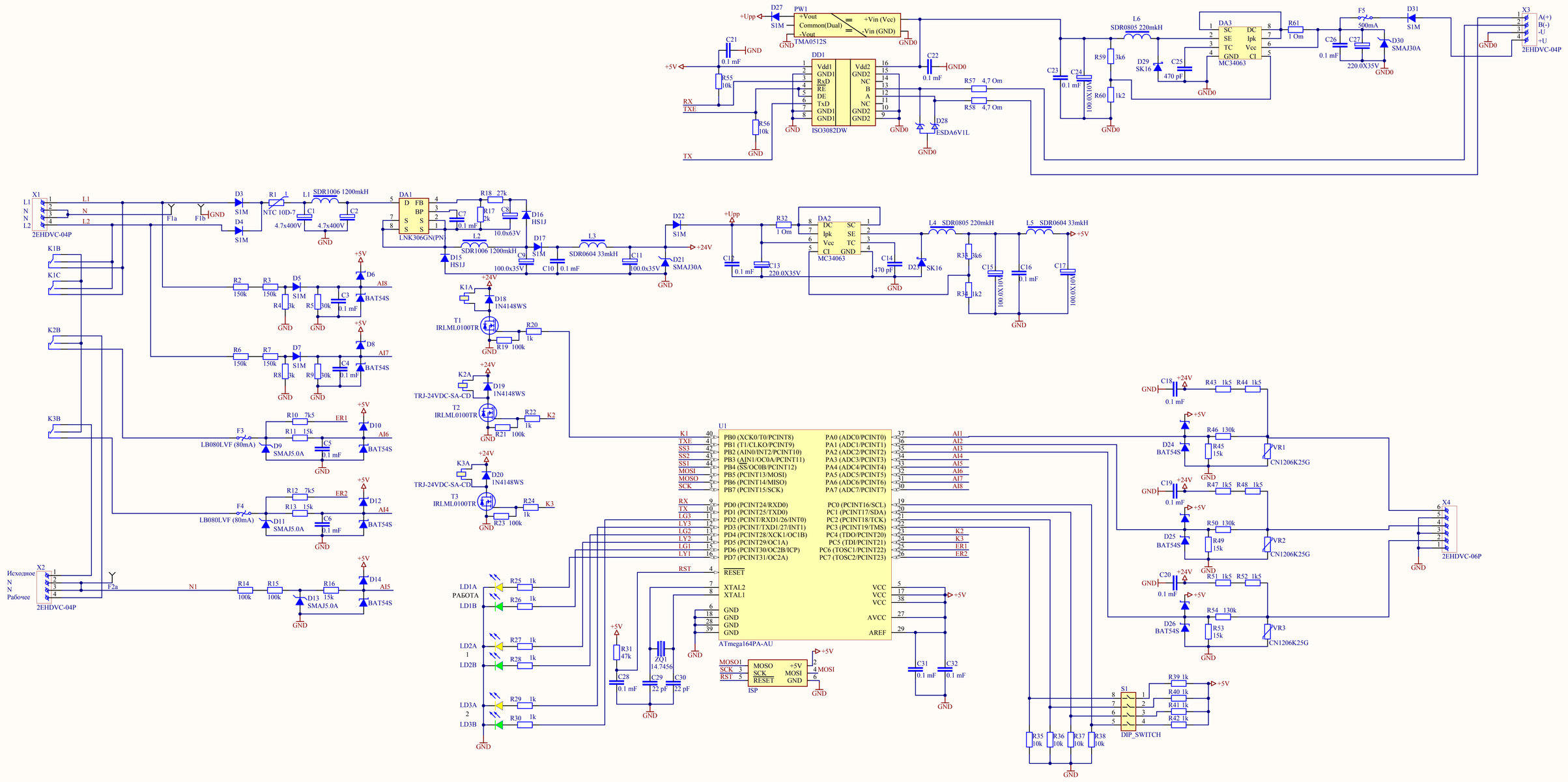

Title		
Size A2	Number	Revision
Date: 05.03.2017		Sheet of
File: C:\Users\..\km_kl10.SchDoc		Drawn By: