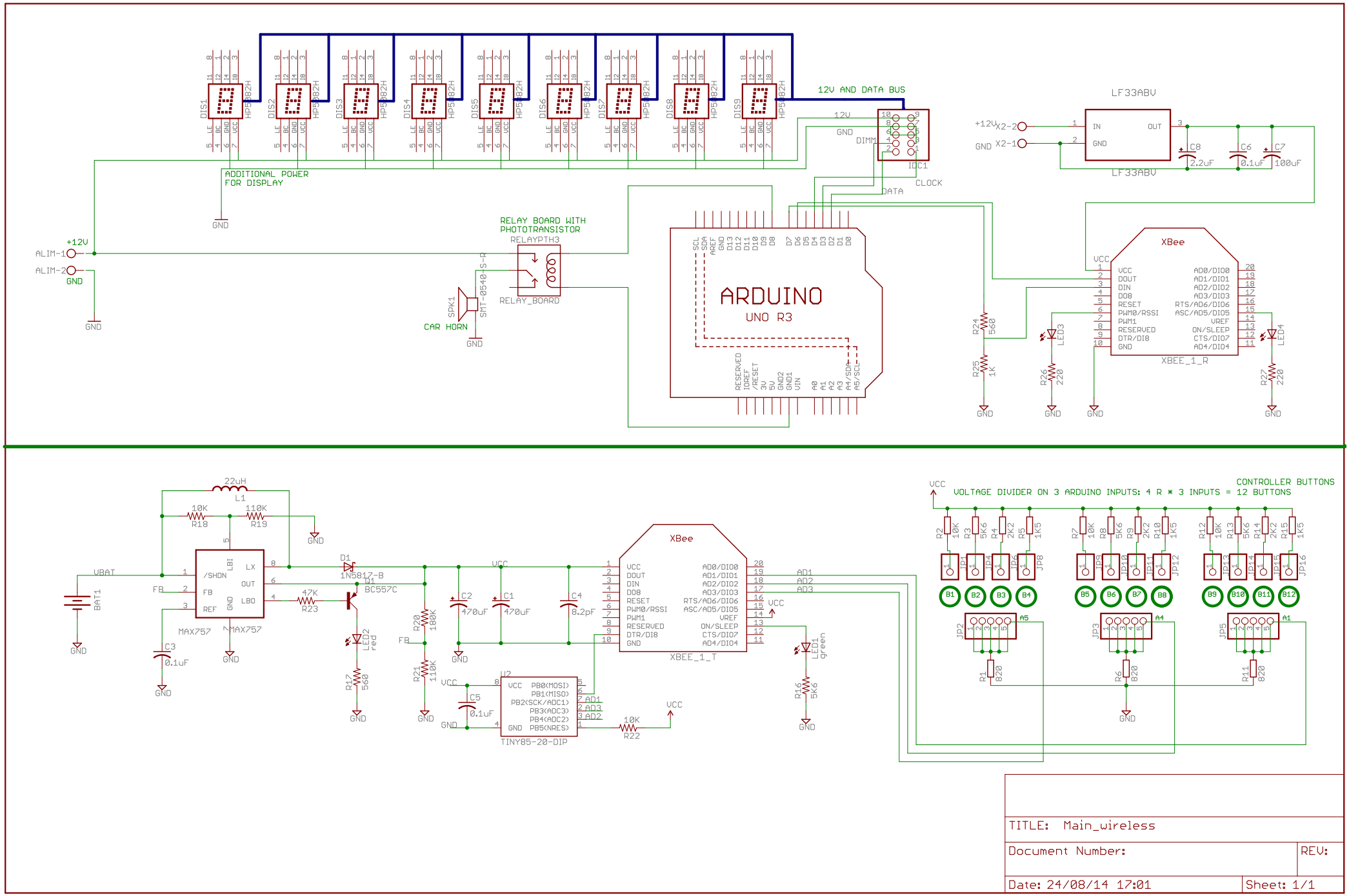

TITLE: Main_wireless

Document Number:

REV:

Date: 24/08/14 17:01

Sheet: 1/1