Miniscule Shifts: Studying Properties of ^{57}Fe using Mössbauer Spectroscopy

Edvin Tewolde Berhane and Brayant Garcia
(Dated: December 8, 2022)

In 1958, Rudolf Mössbauer published his discovery of recoil-free emission and absorption of gamma rays. The phenomenon came to be known as the Mossbauer effect and the discovery won the Nobel prize only three years later. In a recoil-free transition, no energy is lost to a recoiling nucleus. This results in an extremely well-defined energy of the gamma ray emitted. Mossbauer's discovery therefore enabled measurements previously impossible. Here we used the well-defined gamma ray energy to probe transitions of ^{57}Fe nuclei in different environments, measure the lifetime of the excited state in ^{57}Fe, observe the relativistic Doppler effect, and model the antiferromagnetic transition in FeF_2.

I. INTRODUCTION

Since its discovery in 1958 [1, 2], the Mossbauer effect has enabled new types of measurements on a wide range of elements. The most common isotope measured using the Mossbauer effect, and the one we measured in this paper, is ^{57}Fe. The effect has however been observed in many other elements [3]. Measurements of ^{57}Fe use the 14.41 keV energy difference between the excited and ground state. The ground state has infinite lifetime and thus zero uncertainty in energy, whereas the excited state has limited lifetime and an uncertainty Γ on the order of 10^{-9} eV [3]. The Mossbauer effect in ^{57}Fe thus results in energy uncertainty on the order of 1 part in 10^{12}.

In 1960, only 2 years after Mossbauer's discovery, Pound and Rebka used the high precision gamma rays from the Mossbauer effect to test an aspect of general relativity. General relativity predicts that time passes slower in stronger gravitational fields. In the basement of a building, time is therefore somewhat slower than on the roof of the building. Slower time results in a higher gamma ray frequency. Pound and Rebka found that the frequency of gamma radiation differed between roof and basement of the Jefferson Physical Laboratory at Harvard [4], in agreement with general relativity. The attempt was not entirely conclusive due to the impact of minute temperature differences between the basement and roof, but they followed up with another paper taking temperature differences into account [5]. The difference they found was only 1 part in 10^{15} and would thus have been impossible to resolve without the Mossbauer effect.

The Mossbauer effect can also be used to make a range of other measurements. In nuclear physics, the Mossbauer effect is used to determine the lifetime of excited states, nuclear spins, nuclear quadrupole moments, g-factors, and internal conversion coefficients. In chemistry and solid state physics, the microscopic resolution of the Mossbauer effect allows examining oxidation states, electric field gradients, and order-disorder transitions, just to name a few [3].

II. THE MOSSBAUER EFFECT

Atomic nuclei have quantized energy levels and emit or absorb gamma rays in transitions between them. To satisfy conservation of momentum, both emitting and absorbing nuclei must have some recoil momentum $\vec{p}_R$ after their transition:

$$\vec{p}_\gamma + \vec{p}_R = 0 \tag{1}$$

where $\vec{p}_\gamma$ is the momentum of the gamma ray. We know $|\vec{p}_\gamma| = E_\gamma/c$. The energy carried off by the recoil E_R is then given as:

$$E_R = \frac{|p_R|^2}{2M} = \frac{E_\gamma^2}{2Mc^2} \tag{2}$$

where M is the recoil mass, c is the speed of light, and E_γ is the gamma ray energy. Conservation of energy requires the sum of E_R and E_γ to be the same as the energy of the transition E_T. Emission with recoil will therefore have E_γ lower than E_T and absorption with recoil will require E_γ higher than E_T.

Every excited state has an uncertainty in energy ΔE. This is a consequence of the uncertainty relation $\Delta E \Delta t \geq \hbar$, where Δt is the lifetime of the state. If the recoil energy in equation 2 is large compared to the uncertainty in energy of the excited state, there is a significant gap between the emission and absorption spectra for the same nuclei. When gamma rays emitted from one nucleus is absorbed by another nucleus of the same element, it is known as resonant absorption.

To give some concrete numbers, we consider the 14.4 keV transition between the excited and ground state of ^{57}Fe. This is the most common nuclear transition used in Mossbauer spectroscopy and the one we used in our measurements. Equation 2 computes $E_R \approx 10^{-3}$ eV for the 14.4 keV line in ^{57}Fe. The linewidth of the transition is known to be on the order of 10^{-9} eV [3]. With a recoil energy six orders of magnitude larger than the linewidth, there is essentially zero probability of resonant absorption.

However, when an atom is bound in a solid, it has a binding energy. Because the binding energy is significantly larger than the recoil energy, the atom is stuck in place. Recoil momentum can therefore not transfer

to linear translational motion of the transitioning nuclei. The energy of the transition must instead be shared between the γ-photon, the lattice vibrations, and the kinetic energy of the solid as a whole. The kinetic energy of the solid due to conservation of momentum is vanishingly small. If we have Avogadro's number of atoms, the energy lost due to recoil in equation 2 will decrease by a factor of 10^{23} [3].

The energy of a nuclear transition in a solid is thus shared between the lattice vibrations and the γ-photon. However, not every transition excites lattice vibrations since low frequency lattice vibrations have a low probability of being excited by a transition in a single nucleus [3]. For such transitions, the recoil momentum p_R is transferred to the whole mass of the crystal and only a vanishingly small amount is lost to kinetic energy. These recoil-free transitions are the reason for the Mossbauer effect. Recoil-free transitions have gamma ray energies that differ negligible from the transition energy. As a result, the emission and absorption spectra for a given element overlap, creating resonant absorption and giving rise to the Mossbauer effect.

III. MOSSBAUER SPECTROSCOPY

Mossbauer spectroscopy uses the resonant absorption and extraordinarily narrow linewidths of the recoil-free transitions to probe the energy profiles of nuclear transitions. A Mossbauer spectrometer requires a source of gamma rays, an absorbing element, and a gamma ray detector. The intensity incident on the detector I_d can be expressed as the product of the emission intensity $I(E)$ and the absorption fraction $e^{-\mu(E)L}$:

$$I_d = \int_0^\infty I(E) \cdot e^{-\mu(E)L}\, dE \tag{3}$$

where L is the thickness of the absorber and $\mu(E)$ is the attenuation coefficient characteristic of the absorber. To perform spectroscopy, the energy incident on the detector must be varied. This is usually done by Doppler shifting the source spectra. Radiation emitted with energy E from a source moving with velocity v will be shifted to first order by an amount ΔE given as:

$$\Delta E = \frac{v}{c} E \tag{4}$$

where c is the speed of light. Expressing I_d as a function of velocity thus gives us:

$$I_d(v) = \int_0^\infty I\left(E\left[1 + \frac{v}{c}\right]\right) \cdot e^{-\mu(E)L}\, dE \tag{5}$$

If both the emission and absorption spectra are identical Lorentzians, the intensity incident on the detector can be approximated as a Lorentzian with twice the full-width-half-max (FWHM) of the emitter and absorber. The FWHM will be larger when emitters and absorbers are not infinitely thin, but the FWHM in the detected intensity can still be used as an upper bound for the FWHM in the emitter and absorber. An upper bound of the FWHM for the transition allows computing a lower bound for the lifetime of the excited state in ^{57}Fe through the Heisenberg uncertainty principle $\Delta E \Delta t \geq \hbar$.

A convenient way to treat the intensity is to consider the overlap ϵ between the emission and absorption spectra at a velocity v. The overlap is defined as:

$$\epsilon(v) = \frac{I_d(\infty) - I_d(v)}{I_d(\infty) - I_{bg}} \tag{6}$$

where $I_d(v)$ is the intensity when the source is moving with velocity v, $I_d(\infty)$ is the intensity transmitted for velocities far from resonant absorption and I_{bg} is the intensity due to background radiation. Gamma radiation incident on the detector has three distinct origins: recoil-free radiation from the source, recoil radiation from the source, and background radiation. The attenuation in the absorber is due to scattering and absorption from both electrons and nuclei. Following the paper by Housley [6] and ignoring intensity which arise from attenuation and emission of radiation with recoil, we can use the quantity $\epsilon(v)$ to determine the recoil-free fraction f. At the velocity for resonant absorption, ϵ will quickly approach the recoil-free fraction as the absorber becomes thicker.

IV. TYPES OF MOSSBAUER LINE SHIFTS

A. Isomer Shift

The isomer shift arises from the different energy shifts between the ground and excited states of nuclei in the absorber, as shown in figure 1. For electrons in lowest energy s state, the non-zero probability of finding the electron inside the nucleus results in a Coulomb interaction, which increases the total energy of the system. Since the ground and excited states of the nucleus have different radii, their differing overlaps with the electron result in different energy shifts that stray from E_γ. Since the charge distribution around ^{57}Fe varies depending on what compound it is in, the isomer shift varies as well [7].

B. Hyperfine Splitting

The presence of a magnetic field splits the energies of the ground state $J = \frac{1}{2}$ and excited state $J = \frac{3}{2}$ into substates classified by m_j, as shown in 2. Out of 8 possible transitions, only six are permitted due to the selection rule $\Delta m_j = 0, +1, -1$. For the separation of energies in either the ground or excited states ($\Delta 0$ and $\Delta 1$ respectively), they can be calculated from the magnetic field near the nucleus H by equations 7 and 8.

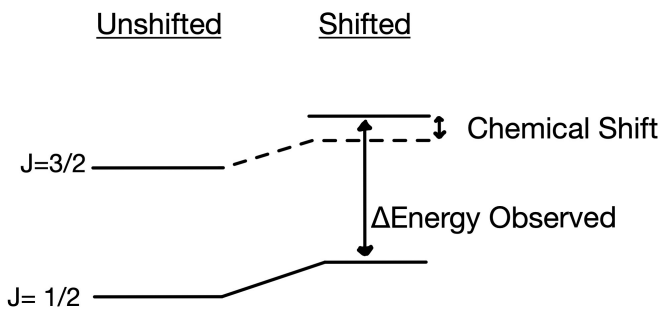

FIG. 1. Illustration of isomer shift; the left hand schematic is the expected transition between the nucleus states $J = \frac{1}{2}$ and $J = \frac{3}{2}$; this transition is expected to be 14.4 keV. The shifted energies on the right account for the Coulomb interactions between the s orbital electron and nucleus.

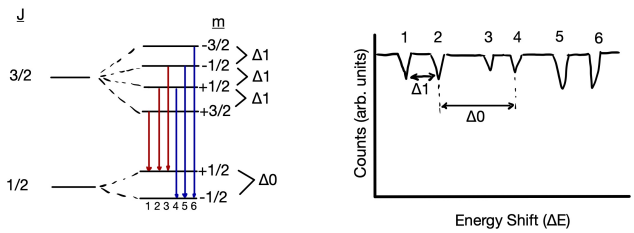

FIG. 2. On the left is a diagram of hyperfine splitting for the ^{57}Fe nucleus; the right hand graph is the energy shift of our source versus its intensity. Dips in the intensity correspond to γ-rays that have enough energy to drive a hyperfine transition being absorbed by a sample. In order to calculate the ratio of the magnetic moments $|\frac{\mu_0}{\mu_1}|$, Δ_0 and Δ_1 are taken by recording the differences in energies of certain transitions.

$$\Delta_0 = \frac{\mu_0 H}{J_0} \tag{7}$$

$$\Delta_1 = \frac{\mu_1 H}{J_1} \tag{8}$$

In these equations, μ_1 and μ_0 are the nuclear magnetic moments of the excited and ground states, respectively. One can rearrange these equations to obtain a ratio of the magnetic moments independent of the magnetic field:

$$\left|\frac{\mu_0}{\mu_1}\right| = \frac{\Delta_0}{3\Delta_1} \tag{9}$$

Greenwood & Gibbs estimate $|\mu_0|$ to be $(0.0903 \pm 0.007)\mu_N$ and $|\mu_1|$ as $(0.1548 \pm .0013)\mu_N$ [3]; μ_N is the

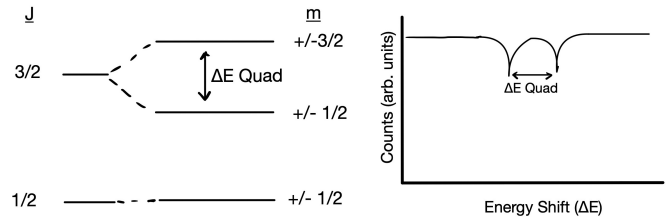

FIG. 3. Energy diagram of Quadrupole Effect for ^{57}Fe. The ground state of the nucleus retains its degeneracy along $m_j = \pm\frac{1}{2}$, implying a spherically symmetric charge distribution. The excited state split along $|m_j|$; their separation ΔE_{Quad} is experimentally observed by two separate peaks in the intensity, shown on the right.

nuclear magneton, which is well defined to be approximately $5.051 * 10^{-27}\frac{J}{T}$. With either the ground or excited magnetic moment and its corresponding energy splitting, we can calculate the magnetic field around the nucleus. The energy splittings can be found by finding the separation between recorded dips, as shown in figure 2. $\Delta 1$ is calculated by taking the difference between the $|J, m_j\rangle = |\frac{3}{2}, +\frac{3}{2}\rangle \rightarrow |\frac{1}{2}, +\frac{1}{2}\rangle$ transition and $|\frac{3}{2}, +\frac{1}{2}\rangle \rightarrow |\frac{1}{2}, +\frac{1}{2}\rangle$. For $\Delta 0$ it was found from the difference between the $|\frac{3}{2}, +\frac{1}{2}\rangle \rightarrow |\frac{1}{2}, +\frac{1}{2}\rangle$ transition and $|\frac{3}{2}, +\frac{1}{2}\rangle \rightarrow |\frac{1}{2}, -\frac{1}{2}\rangle$.

C. Quadrupole Effect

The nucleus (ignoring thermal vibrations) remains stationary with respect to the electron; this implies that it is at a point where the electric field is zero. However, if the nucleus's charge distribution is not symmetric around a specific axis, it creates a quadrupole moment Q, which in turn raises the energy of the nucleus by following:

$$\Delta E_{Quad} = e^2 qQ \frac{3m_j^2 - J(J-1)}{4J(2J-1)} \tag{10}$$

Here, q is a measure of the gradient along the symmetric axis $\frac{1}{e}\frac{dE}{dz}$, e is the elementary charge of the electron. The ground state of the nucleus remains degenerate, but the excited state partially breaks degeneracy along $|m_j|$, as shown in figure 3. If ΔE_{Quad} is known, the product between the gradient of the electric field and Q can be estimated as the following:

$$\frac{dE}{dz}Q = \frac{2\Delta E_{Quad}}{e} \tag{11}$$

If Q is known, then we can estimate the gradient of the electric field around our nucleus.

D. Temperature shift

The temperature shift is due to the relativistic Doppler effect. The special theory of relativity predicts that a

clock moving with velocity v will run slow by a factor $\sqrt{1-\frac{v^2}{c^2}}$ relative to a stationary clock. As long as our absorber is not at absolute zero, the atoms are moving with some velocity. The velocity follows a distribution depending on temperature, with lower temperature shifting the distribution to lower velocities. At each temperature, there is an average velocity v_t. The velocity is in all directions, but this does not matter since the relativistic Doppler shift only depends on the magnitude of the velocity. For a given temperature, time will therefore on average be slower for atoms in our absorber by a factor $\sqrt{1-\frac{v_t^2}{c^2}}$ compared to in a stationary frame.

A slower clock will measure a higher frequency of light. Since the energy of light is proportional to its frequency, the energy of light is higher in a moving frame. When we cool our absorber down, the atoms slow down. Time will then on average run faster for them. Frequencies will therefore shift down and they perceive incoming radiation as less energetic. To excite the transition in slower moving atoms, incoming radiation must therefore carry more energy. This results in the absorption lines shifting in energy for different temperatures.

V. EXPERIMENTAL PROCEDURE

We used the spectrometer setup described by the diagram in figure 4.

The first thing we did was to calibrate the signal from the velocity transducer (Sanborn LVsyn 6LV2). The transducer measures the velocity of the rod through Faraday's law:

$$\nabla \times E = -\frac{\partial B}{\partial t} \tag{12}$$

A permanent magnet is attached to the rod and a wire is wrapped around it. The rod is moved when the driver control unit (laboratory-built) provides an AC signal to the loudspeaker at the bottom. Moving the rod moves the magnet, which creates a voltage in the wire through Faraday's law. The amplitude of the voltage is proportional to the magnitude of $\frac{\partial B}{\partial t}$, which in turn is proportional to the velocity of the rod. We determined the proportionality factor using a Michelson interferometer.

A diagram of the interferometer is shown in figure 5. A HeNe laser is separated by a partial beam splitter (PBS). One the beams is reflected by a stationary mirror and returns back to the PBS. The other beam is reflected back from a mirror attached to the moving source. The interference between the beam from the stationary mirror and beam from the source mirror is recorded by a photodiode. An oscilloscope is used to record the voltage across the photodiode and compare it with the voltage across the transducer. Plots of the photodiode and transducer voltage can be found in the supplementary information.

In order to calculate the velocity of the source, we determined the distance travelled by counting the number of fringes over an interval where the transducer voltage is approximately constant. We can then approximate the maximum transducer velocity v_{max} as follows:

$$v_{max} = \frac{\lambda f}{2\Delta t} \tag{13}$$

λ is the wavelength of the HeNe laser and f is the number of interference fringes during an interval Δt. The factor of 1/2 comes from the length of the beam path changing twice as fast as the position of the rod. Since voltage is proportional to velocity, we can convert the maximum voltage V_{max} recorded to v_{max} by a factor γ, as shown below:

$$\gamma = \frac{v_{max}}{V_{max}} \tag{14}$$

With the transducer calibrated, we identified the 14.41 keV line from our ^{57}Co source. This is the energy corresponding to decay of the excited state in ^{57}Fe, but ^{57}Co emits many other lines as well. See figure 6.

To differentiate between the lines, we used the proportional counter (Reuter-Stokes RSG-30A). The proportional counter emits a current pulse proportional to the strength of the incident gamma ray and the bias voltage applied. We used a constant +1850V voltage from the H.V. power supply (Ortec 478) on the proportional counter. The current pulse from the detector was converted to a proportional voltage pulse through the preamplifier (Canberra 806) and amplifier (Ortec 570). Voltage pulses were counted in a pulse height analyzer (PHA) software on the computer.

A multifunction data acquisition card (National Instruments PCI-6070E) was used to interface between the computer and circuit. To give the acquisition card time to digitize the output from the amplifier, a pulse stretcher (Ortec 542) was used to hold the peak of the pulse. Once digitized, the PHA software counts the voltage pulses to produce a histogram of counts against voltage. Initially, we saw three peaks in the histogram and relatively constant counts everywhere else. To identify the 14.41 keV peak, we used copper, plastic, and aluminum absorbers. All these materials have different known absorption spectra. By looking at how the peaks changed for the different absorbers, we were able to identify the 14.41 keV line. The background fraction was taken to be the fraction of the counts recorded for the 14.41 keV peak that could be seen in all voltage bins of the histogram.

With the 14.41 keV line identified, we determined the corresponding voltage range registered by the computer through inspecting the PHA histogram. We set the single channel analyzer (SCA) (Ortec 551) to the voltage range registered by the PHA and connected it to the data acquisition card. To make sure we had the right range, we ran the PHA software again, but this time limiting counting only to when the SCA gave a signal. We clearly saw the 14.41 keV line in the histogram and zero counts everywhere else.

To conduct measurements, we used a multichannel scalar (MCS) software in the computer. This software

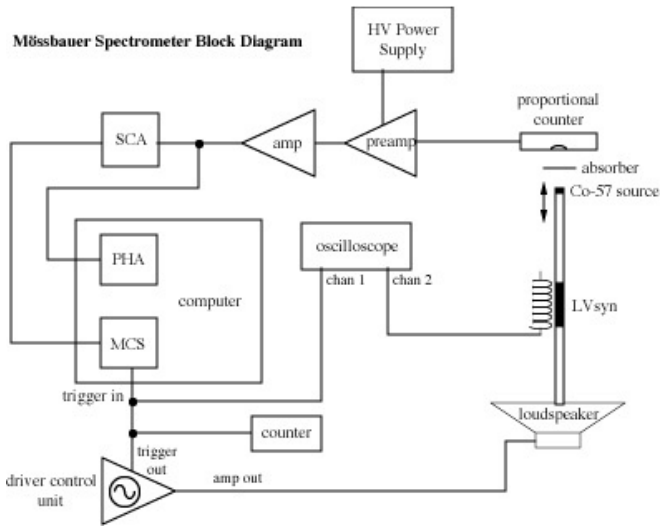

FIG. 4. Block diagram of the spectrometer [8]. A multifunction data acquisition card and a pulse stretcher (not shown) were used to interface the analog circuit with the computer.

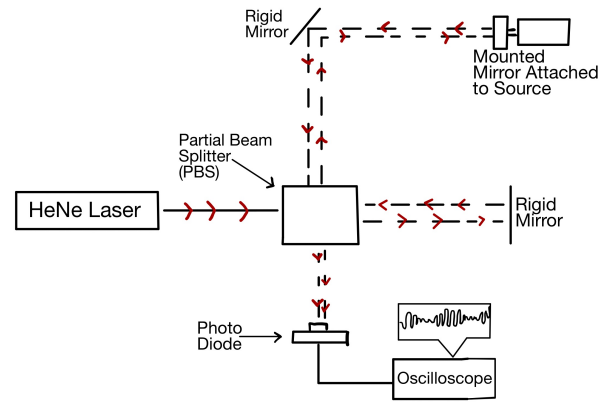

FIG. 5. Schematic of Michelson interferometer used in calibrating the velocity of our source; the interference between the beam returning from a stationary mirror and mirror mounted on the source is recorded by a photo diode, an observed on an oscilloscope as beating fringes.

takes a start signal and then iterates over multiple channels, dwelling in each for a given time. While dwelling in a channel, the software counts how many voltage pulses are received. Each channel has its own separate count and each corresponds to a different time interval after the start signal.

To get any meaningful information from the channels, we synchronized them with the velocity of the source. The driver control unit outputs a pulse with the same frequency as its AC signal. We used this pulse as the start signal for the MCS to fix the velocity corresponding to a channel. Multiple sweeps through all channels must be performed to pick up the signal from the noise. With the start signal from the driver control unit, a channel will correspond to the same velocity at every sweep. We were thus able to pick up the signal through adding up counts from multiple sweeps.

Our time interval was long enough for each velocity to occur twice. The frequency and amplitude of the velocity were determined by fitting a trigonometric function to the signal on the oscilloscope. To determine the velocity phase relative to the MCS sweep, we used the time difference between the channels with dips corresponding to the same velocity. We knew what dips corresponded to the same velocity because every dip was repeated twice in the MCS data. Using the time difference between points where we knew the velocity had to be the same was important to ensure a good synchronization between the MCS channels and the actual velocity of the rod.

VI. RESULTS

A. Recoil free fraction in stainless steel 316

We estimated the recoil-free fraction in a sample of stainless steel 316 through the ratio between the counts in the resonant absorption dip and the counts far from the dip in figure 7. Since we used the SCA to only count gamma rays detected to have energies around 14.4 keV, all absorption can be approximated as resonant absorption and we can use the ϵ quantity to determine the recoil-free fraction [6]. We can approximate the fractional absorption ϵ defined in equation 6 at the dip through the counts N as:

$$\epsilon = \frac{N_\infty - N_{dip}}{N_\infty - N_{bg}} \tag{15}$$

where N_∞ is the count far from the dip, N_{dip} is the lower count in the dip, and N_{bg} is the count due to background radiation.

The counts at a given energy were modelled as Poisson distributed with mean and variance equal to the number of counts. We found the background counts to be around 3%. The error in the number of counts was taken as the standard deviation of the distribution. A Lorentzian fit to our data gave $\chi^2_\nu \approx 4$. We were unable to find a model with lower χ^2_ν and made our calculations based on the parameters of the best-fit Lorentzian. See supplementary information for exact values used.

Plugging in gives $\epsilon = 0.4304 \pm 0.0002$ for our stainless steel absorber of thickness 24 mg/cm^2. In a paper by Major [10], the fractional absorption for a stainless steel absorber of this thickness is measured to be around 0.5. To estimate the actual recoil-free fraction of the absorber, measurements must be made on absorbers with different thicknesses. ϵ approaches the recoil-free fraction of the

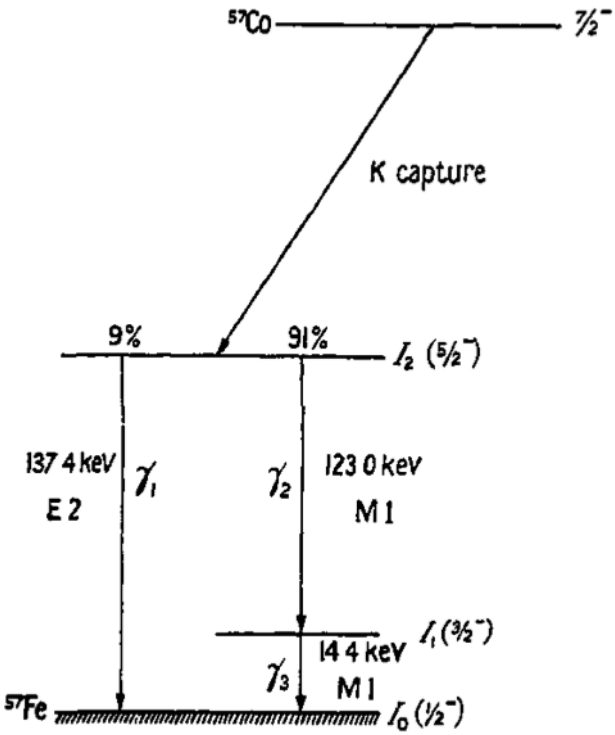

FIG. 6. Decay of ^{57}Cobalt [9]. ^{57}Co decays to an intermediate state before decaying via one of two paths: one path releases 137.4 keV of energy at once, while the other splits it up into 123 keV and 14.4 keV. The majority of decays happen through the latter path, which is the one we use for spectroscopy.

material asymptotically with increasing thickness. The value of the recoil-free fraction was found in the Major paper to be around 0.6 [10].

A potential reason for the deviation in the value of ϵ we measured from the value found by Major in [10] is an inaccurate estimate of the background. A higher background would raise the fractional absorption measured, moving our result closer to Major's value. To match his results, the background would have to be around 15%. In [6], a detailed discussion of background estimation is made. Our method of inferring the background in the absence of a radioactive source is said to give large underestimates. It fails to not take nearby X-rays or Compton scattering of recoil-free gamma rays in the source into account. A background of 15% is within the range of the more intricate background estimate described by Housley et al. [6].

B. Lifetime of $J = 3/2$ state in ^{57}Fe

The lifetime of the excited $J = 3/2$ state in ^{57}Fe can be lower bounded using the Heisenberg uncertainty relation $\Delta E \Delta t \geq \hbar$. In our stainless steel measurement, the emission and absorption spectra are identical Lorentzians. We

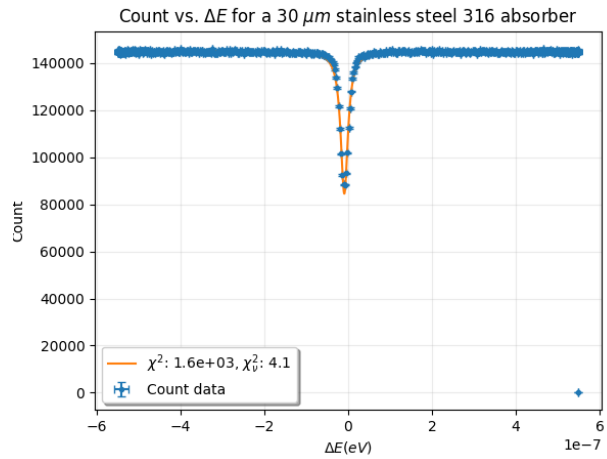

FIG. 7. Detector counts as a function of energy shift with a 30 um stainless steel 316 absorber.

can therefore conclude from 5 that the intensity incident on the detector will also be Lorentzian with FWHM denoted by Γ_d. The FWHM of the source and absorber can be bounded using Γ_d through:

$$\Gamma_d \geq 2\Gamma_s = 2\Gamma_a \tag{16}$$

where Γ_s is the FWHM of the source and Γ_a is the FWHM of the absorber. We found $\Gamma_d = (2.08 \pm 0.02) \cdot 10^{-8}$ eV in our stainless steel measurement. This means $\Gamma_s \leq (1.04 \pm 0.01) \cdot 10^{-8}$ eV. For a Lorentzian energy distribution, $\Delta E = \Gamma$. Plugging into the Heisenberg relation gives the lifetime Δt as:

$$(1.04 \pm 0.01) \cdot 10^{-8}\text{eV} \cdot \Delta t \geq \hbar \tag{17}$$

$$\Delta t \geq 6.26 \cdot 10^{-8} \text{ s} \tag{18}$$

The value for the lifetime of the excited state is given in the literature to be around $9.8 \cdot 10^{-8}$ s [3]. Our lower bound does not contradict the accepted value, but is around 50 percent smaller. This discrepancy can be explained if $\Gamma_d > 2\Gamma_s$, which is the case when our emitter and absorber are not infinitely thin.

C. Ratio of Magnetic Moments in ^{57}Fe

To calculate $|\frac{\mu_0}{\mu_1}|$, we used MCS readings generated from testing Fe_2O_3; the results are shown in figure 8.

By curve fitting individual peaks to obtain the transition energies, we found the ratio to be 0.554. This is in agreement with Greenwood and Gibbs, as the range of possible values (using their numbers of μ_0 and μ_1) suggests the threshold to be $[0.5336, 0.6339]$.

We found Δ_1 to be $1.61{*}10^{-7}$ eV, and with the possible values of μ_1 we believe that the magnetic field around the nucleus to be between 42.9745 and 50.0727 Tesla.

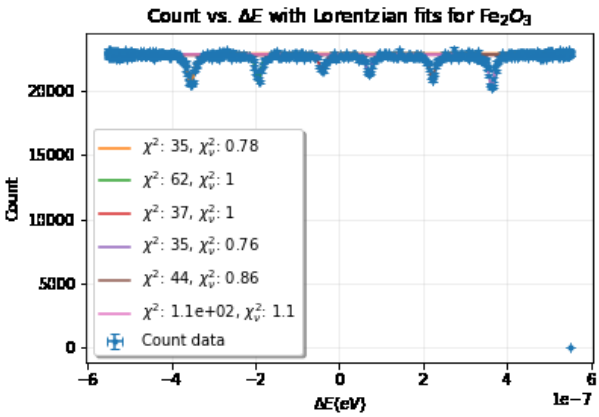

FIG. 8. Observation of hyperfine splitting with Fe_2O_3. The horizontal axis is on the order of eV. The peaks were curve fitted as Lorentzian. From left to right, the first, second, and fourth peaks were used to determine $|\frac{\mu_0}{\mu_1}|$.

For reference, the field strength of iron in $ZnFe_2O_4$ has been measured to be 485 kOe, which is approximately 48.5 Tesla [11]. The difference in magnitudes may be related to the different compounds each of the values were measured in, but further research to explain this variance will need to be done.

D. Observation of non-symmetric charge distribution in Na_2Fe

When sampling Na_2Fe, we observed quadrupole splitting; this is shown in figure 9. In order to determine ΔE_{quad}, we visually selected data entries that appeared to be where the dips were at their lowest, and then took the difference; we found $\Delta E_{quad} \approx 7.617 * 10^{-8}$ eV; the corresponding product of the field gradient and quadrupole moment was calculated to be $1.52 * 10^{-7}$ V. We determined the field gradient by approximating Q to be on the order of 0.1 to 1 barn, and found the bounds of the field gradient to be between $1.69{*}10^{21}$ and $1.57{*}10^{22}$ $\frac{V}{m^2}$. The order of this value is in agreement to sources that calculated the gradient of iron within different compounds [12].

In order to improve the accuracy of our measurement, we could have fit the individual curves as Lorentzian to give a more accurate determination of ΔE_{Quad} (as well as providing the error in our measurement). Historically, there has been debate over defining the quadrupole term Q [13], but using a smaller bound for the possible values of Q would help determine a field gradient that is more accurate. However, there still may be variance in the field gradient for ^{57}Fe embedded into different compounds because of varying charge distributions.

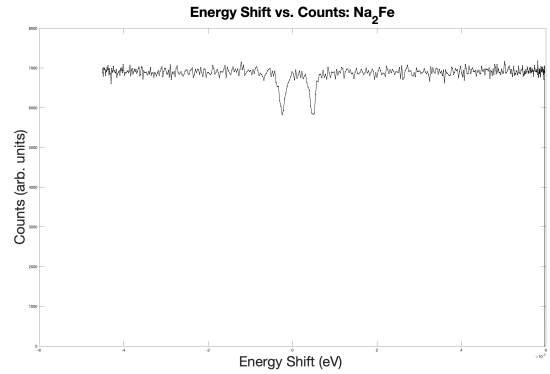

FIG. 9. Observation of quadrupole splitting in Na_2Fe. The separation between the dips was approximated to estimate the product of the quadrupole moment Q and electric field gradient.

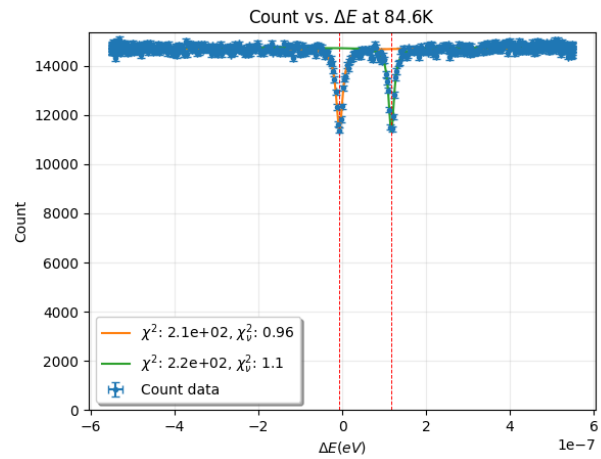

FIG. 10. Gamma ray count plotted against energy shift of the source. The absorber is FeF_2 at 84.6 K. Red lines show the center of the Lorentzians. Note how the lines are slightly shifted to the right compared to the 293K plot in figure 11.

E. Temperature shift in FeF_2

The results are shown in figure 10 and 11. The red lines mark the middle point of each Lorentzian. The left red line was found to be shifted by $(10 \pm 4) \cdot 10^{-10}$ eV and the right red line was shifted by $(72 \pm 3) \cdot 10^{-10}$ eV between 293 K and 84.6K. Both lines were thus significantly shifted to higher energy at lower temperature, as predicted by special relativity.

F. Antiferromagnetic transition in FeF_2

The antiferromagnetic phase transition in FeF_2 is known in the literature to occur at 78.11 ± 0.01 °K and

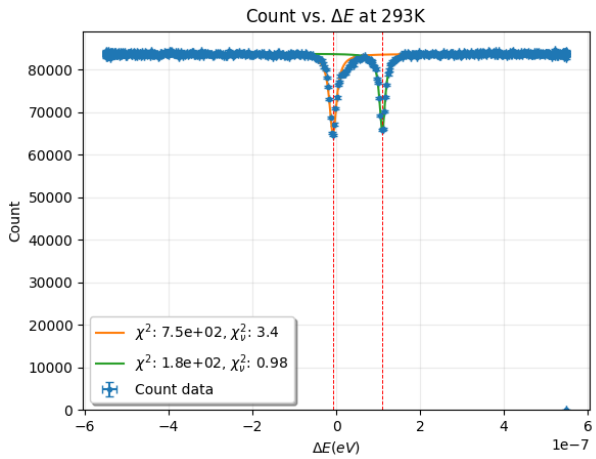

FIG. 11. Gamma ray count plotted against energy shift of the source. The absorber is FeF_2 at 293 K. Red lines show the center of the Lorentzians. Note how the lines are slightly shifted to the left compared to the 84.6K plot in figure 10.

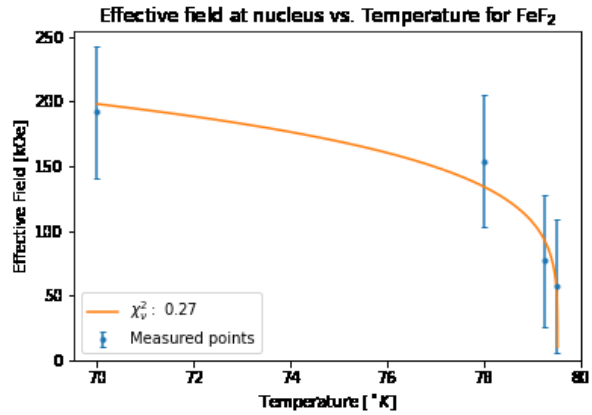

FIG. 12. Plot of local magnetic field at nucleus against temperature for temperatures below $T_{\text{Néel}}$. The trend agrees with the literature but there are significant error bars due to noisy data.

is a second order phase transition [14]. The order parameter is the magnetization M and it dependence on temperature T as:

$$M(T) = M(0) \cdot D \left(1 - \frac{T}{T_N}\right)^{\beta} \tag{19}$$

T_N is the Néel temperature for FeF_2, $M(0)$ is the magnetization at 0 K, and D and β are parameters to determine. Mossbauer spectroscopy can be used to determine D and β by measuring how the magnitude of the hyperfine splitting changes with temperature. The magnitude of the hyperfine splitting is shown in equation 8 to be proportional to the effective field at the nucleus. The effective field is in turn proportional to the magnetization. We measured the split as a function of temperature and used the value of the magnetic moment of the nucleus given by Greenwood & Gibb [3]. In computing the field, we used the hyperfine split corresponding to $\Delta_0 + \Delta_1$. See supplementary material for where the dips were recorded at each temperature. The time differences were converted into energy differences using the velocity calibration from our measurement of FeF_2 at 84.6 K. Our results are shown in figure 12.

The results in figure 12 are within experimental error to results in the literature [14]. There was a lot of noise in our data and we were not able to fit any curve to it. Instead, we visually inspected the data to determine the position of the dips. The error was also determined by visually inspecting the width of the dips. In addition to the human error inherent in this manual method, it's possible we misidentified a dip due to the low resolution of the data. This would cause the wrong value to be recorded for the magnitude of the split and hence the wrong field strength. We erred on the side of caution with our error bars due to the noise in the data and our manual method of identifying the dips.

Our curve fit in figure 12 found $T_{\text{Néel}} = 79.5 \pm 0.1$ °K instead of 78.11 ± 0.01 °K as in the literature [14]. We did not perform a thermometer calibration and believe this to be caused by the thermometer consistently reading a higher temperature than the actual temperature of our FeF_2 sample. The fit also gave $D = 0.95 \pm 0.27$ and $\beta = 0.21 \pm 0.09$. In the literature, D is given as 1.36 ± 0.03 and β as significantly 0.325 ± 0.005 [14]. Both our values thus differ significantly. We think the discrepancy can be explained by the noise in the data and the inherent inaccuracy in our method of identifying the dips. Further measurements are needed to draw any stronger conclusions.

VII. CONCLUSION

Mossbauer spectroscopy is a powerful technique to make a variety of measurements. In this paper, we made measurements of the recoil free fraction in stainless steel 316, the lifetime of the excited state in ^{57}Fe, the magnetic moments of the ground and excited state in ^{57}Fe, the magnetic field at the nucleus in Fe_2O_3, the quadrupole moment and electric field gradient in Na_2Fe, temperature shifts, and the antiferromagnetic transition in FeF_2.

To get a better value for the recoil free fraction in stainless steel, we would measure absorbers of different thickness to determine the asymptotic value of ϵ. Determining the precise background, potentially following the procedure described by Housley, would also be critical for an accurate measurement of the recoil-free fraction [6].

Future measurements could also enable a tighter lower bound on the lifetime of the excited state in ^{57}Fe. With a thinner absorber or knowledge of how the width of the dip

in the detected gamma rays depends on absorber thickness, a higher lower bound would be achieved.

In measuring the antiferromagnetic transition in FeF_2, there is much improvement to be made. We did not have enough time to get a clear signal in our data. All the noise made picking out the precise value for the size of the split difficult, leading to large error bars in our values of the effective magnetic field. We would also perform a thermometer calibration to get more accurate temperature readings.

Longer measurements would give more accuracy in the temperature shifts as well. In addition, it would be interesting to measure the shifts between more different temperatures. More values would allow examining the functional dependence of velocity in temperature and test existing theories.

ACKNOWLEDGMENTS

We would like to thank professors Isaac Silvera and Amir Yacoby for their guidance in understanding the theoretical background required to run this experiment. We'd also like to thank Joe Piedle and Jieping Fang for helping operate the experiment and talk through problems we encountered along the way. Brayant was responsible for calibrating the transducer velocity using the interferometer data and collecting the data for MCS runs of different samples. Edvin wrote the code to determine the phase of the velocity, curve-fit, and generate figures. We setup and operated the experiment together. In writing this paper, Brayant was responsible for explaining the different energy shifts observed in our data, explaining how the Michelson interferometer operates, calculating the ratio of magnetic moments, and estimating the electric-field gradient near the nucleus. Edvin wrote the abstract, introduction, conclusion, Mossbauer effect, Mossbauer spectroscopy, and experimental procedure sections. Edvin also wrote about the temperature shift and the results for the recoil-free fraction, the lifetime of the excited state, temperature shift, and antiferromagnetic transition.

[1] R. L. Mössbauer, Kernresonanzfluoreszenz von gammastrahlung in ir191, Zeitschrift für Physik **151**, 124 (1958).
[2] R. L. Mössbauer, Recoilless nuclear resonance absorption of gamma radiation: A new principle yields gamma lines of extreme narrowness for measurements of unprecedented accuracy., Science **137**, 731 (1962).
[3] N. Greenwood and T. Gibb, *Mossbauer Spectroscopy* (John Wiley & Sons, Incorporated, 1971).
[4] R. V. Pound and G. A. Rebka Jr, Apparent weight of photons, Physical review letters **4**, 337 (1960).
[5] R. V. Pound and G. A. Rebka, Variation with temperature of the energy of recoil-free gamma rays from solids, Phys. Rev. Lett. **4**, 274 (1960).
[6] R. Housley, N. Erickson, and J. Dash, Measurement of recoil-free fractions in studies of the mössbauer effect, Nuclear Instruments and Methods **27**, 29 (1964).
[7] A. Boyle and H. Hall, The mössbauer effect, Reports on Progress in Physics **25**, 10.1088/0034-4885/25/1/311 (1962).
[8] W. Rueckner, *Mossbauer spectroscopy* (19AD).
[9] H. R. Lemmer, O. J. A. Segaert, and M. A. Grace, The decay of cobalt 57, Proceedings of the Physical Society. Section A **68**, 701 (1955).
[10] J. Major, Recoil-free resonant and non-resonant scattering from fe57, Nuclear Physics **33**, 323 (1962).
[11] F. van der Woude and G. A. Sawatzky, Hyperfine magnetic fields at fe^{57} nuclei in ferrimagnetic spinels, Phys. Rev. B **4**, 3159 (1971).
[12] H. M. Petrilli, P. E. Blöchl, P. Blaha, and K. Schwarz, Electric-field-gradient calculations using the projector augmented wave method, Phys. Rev. B **57**, 14690 (1998).
[13] J. O. Artman, A. H. Muir, and H. Wiedersich, Determination of the nuclear quadrupole moment of fe^{57m} from $\alpha - fe_2o_3$ data, Phys. Rev. **173**, 337 (1968).
[14] G. Wertheim, Temperature dependence of the 57fe hfs in fef2 below the néel temperature, Journal of Applied Physics **38**, 971 (1967).

VIII. SUPPLEMENTARY MATERIAL

In this section, we document the measurements recorded from our interferometer and transducer in order to determine the velocity of our source. The results are shown in figure 13. A close-up of the fringes over a constant velocity is shown in figure 14. Figures 15, 16, 17, 18, and 19, are MCS runs with FeF_2 as the absorber. Above the Néel temperature, the quadrupole effect is most prevalent. As we decrease the temperature to below the critical point, the ordering of local magnetic fields around iron nuclei create hyperfine splitting.

N_∞	N_{dip}
149555	84524

TABLE I. Exact values used in computing ϵ to estimate the recoil-free fraction.

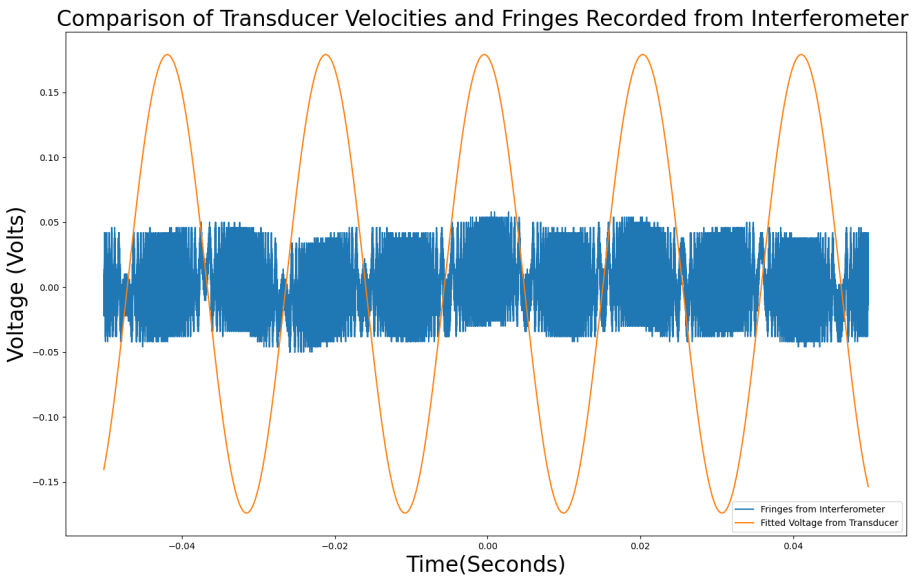

FIG. 13. The blue line represents fringes from the Michelson interferometer, while the orange line represents the curve-fitted voltage coming from the transducer.

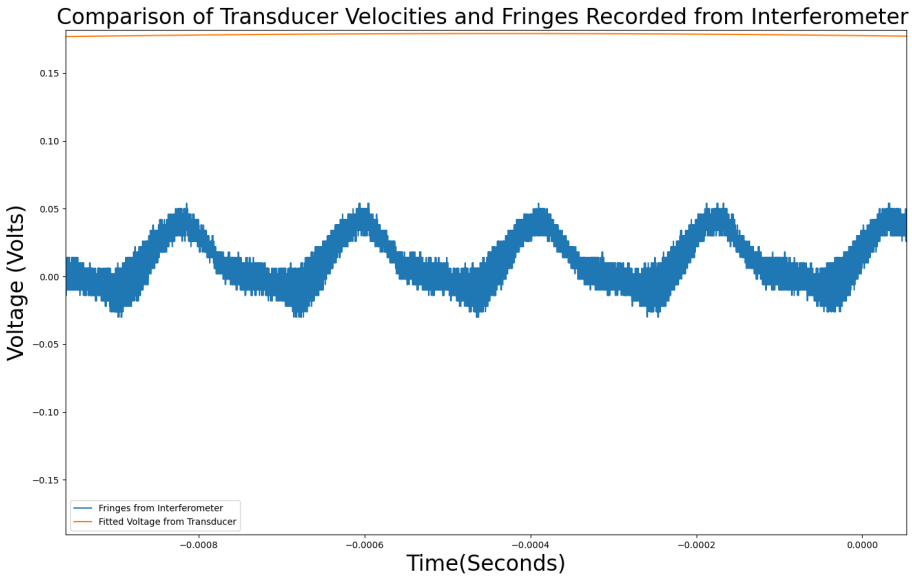

FIG. 14. A zoomed in view of figure 13 near one of the peaks. The number of fringes recorded over a time where the voltage appears constant is used to help determine v_{max}.

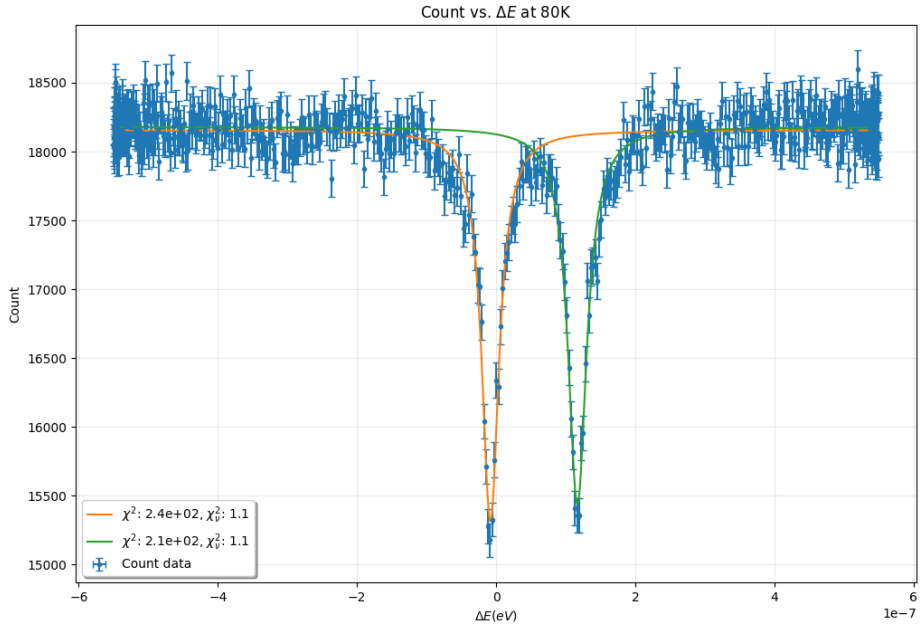

FIG. 15. Intensity plotted against energy shift in FeF_2 at 80°K. We were able to fit Lorentzian functions at this temperature.

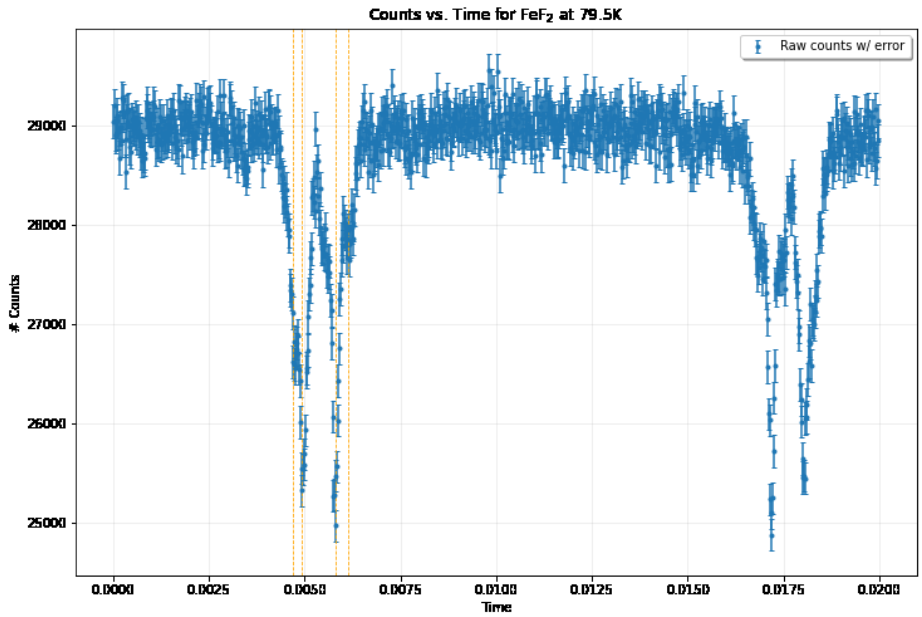

FIG. 16. Intensity plotted against energy shift in FeF_2 at 79.5°K. Orange lines show the values where we recorded separate dips.

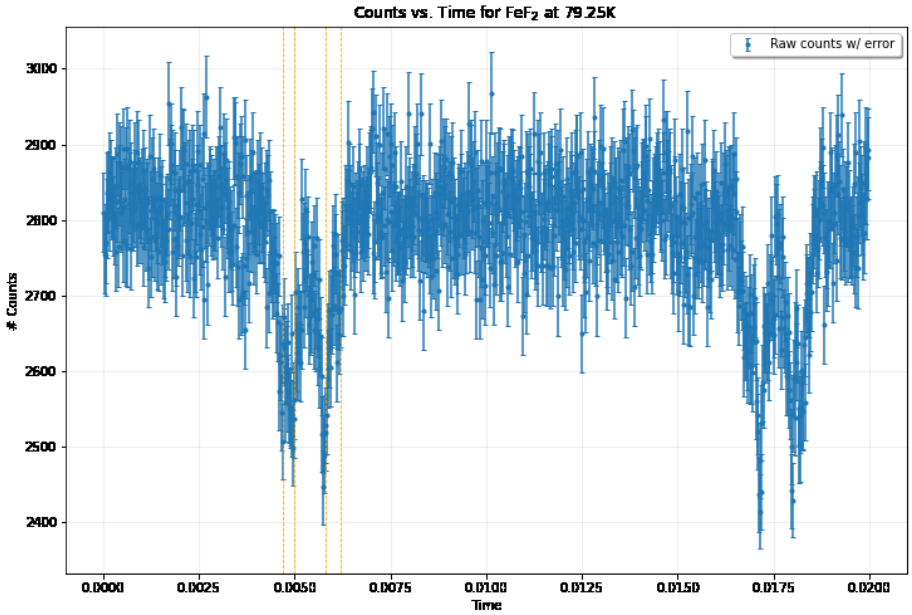

FIG. 17. Intensity plotted against energy shift in FeF_2 at 79.25°K. Orange lines show the values where we recorded separate dips.

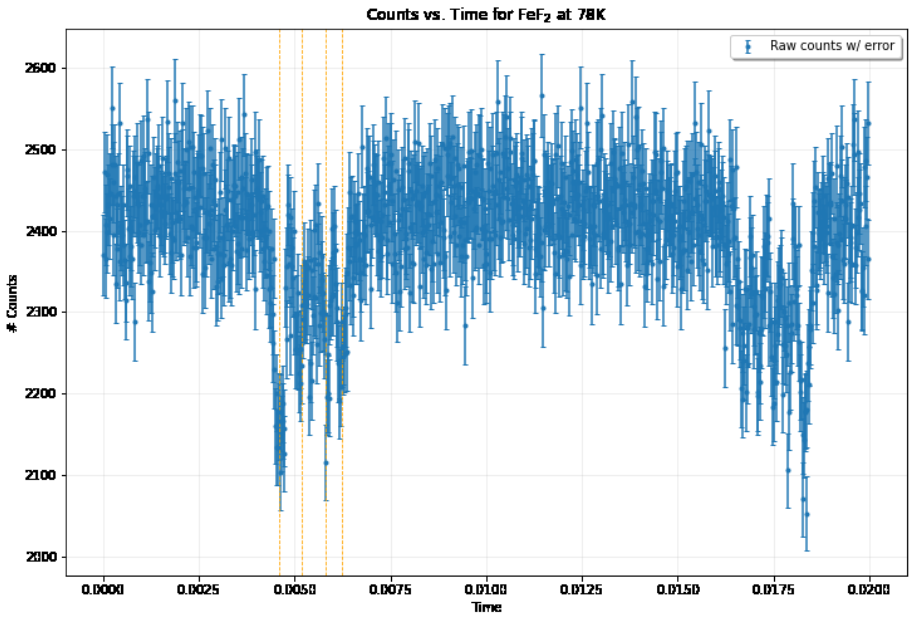

FIG. 18. Intensity plotted against energy shift in FeF_2 at 78°K. Orange lines show the values where we recorded separate dips.

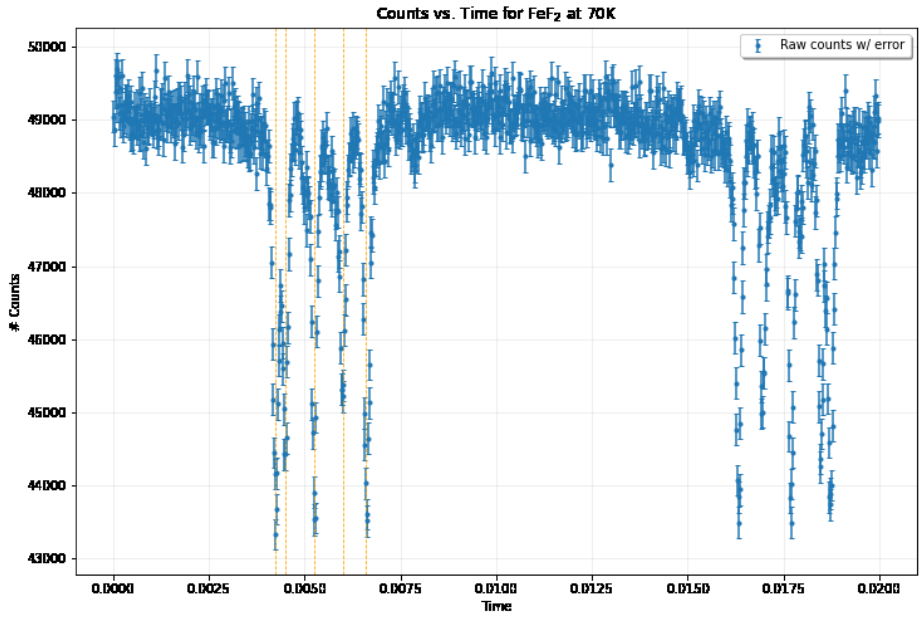

FIG. 19. Intensity plotted against energy shift in FeF_2 at 70°K. Orange lines show the values where we recorded separate dips.