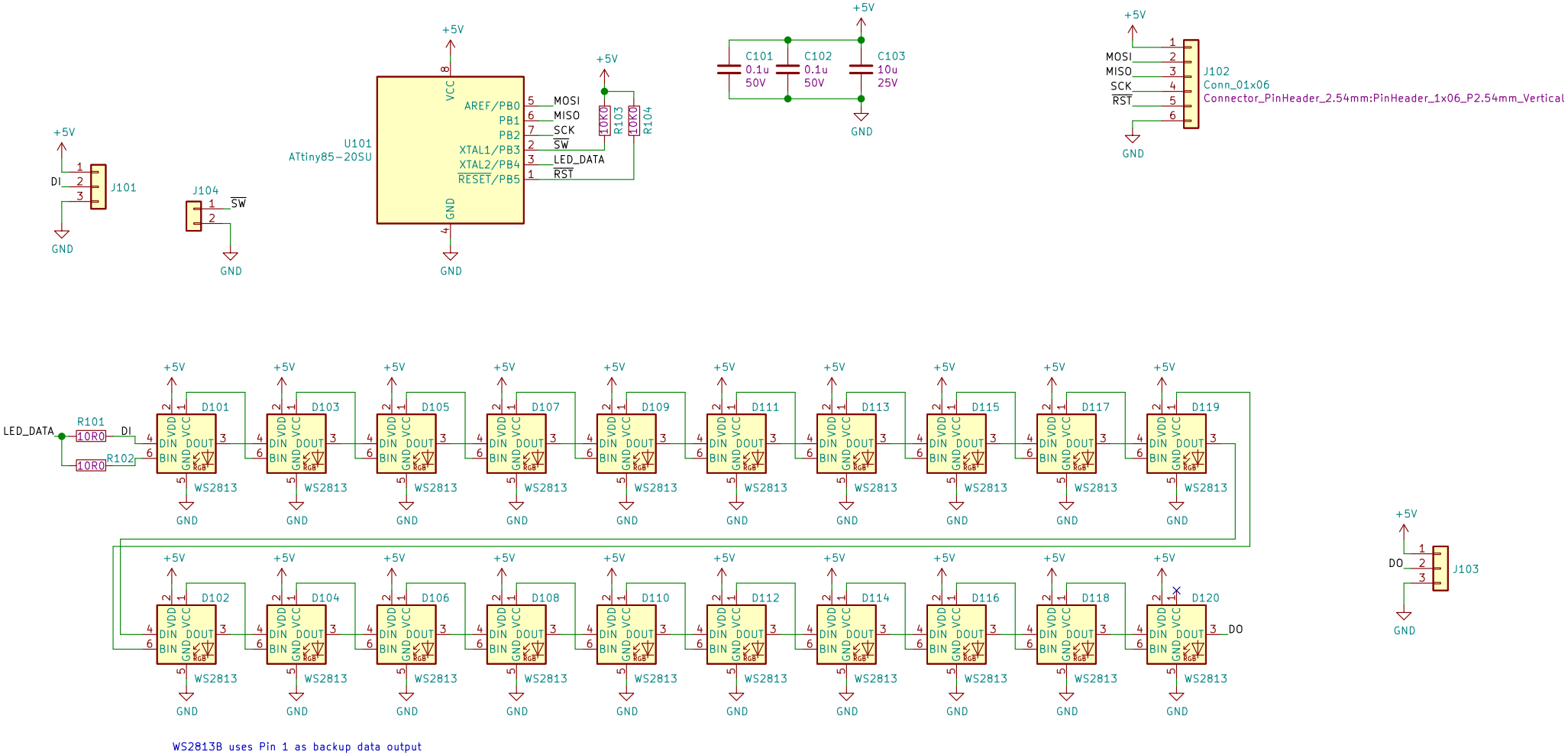

WS2813B uses Pin 1 as backup data output

Reference Designs ARE PROVIDED "AS IS" AND "WITH ALL FAULTS". EEForEveryone DISCLAIMS ALL OTHER WARRANTIES, EXPRESS OR IMPLIED, INCLUDING BUT NOT LIMITED TO, ANY IMPLIED WARRIENTIS OR MERCHANTABILITY OR FITNESS FOR A PARTICULAR PURPOSE.
Reference Designs are provided for EDUCATIONAL PURPOSES ONLY.
EEforEveryone may make changes to specifications and implementation details at any time, without notice.
EEforEveryone does not endorce the designs described here as "Safe" or "Suitable" for any particular purpose or application.
The design information on any Web Site or Materials is uncontrolled and subject to change without notice.
Do not create or finalize a design with this information.

For Educational Purposes Only. Not licensed for sale or use in any country.

EE for Everyone

Sheet: /
File: E4E2107.sch

Title: Light Bar (E4E2107)

Size: A4	Date: 2021-02-12	**Rev: A**
KiCad E.D.A. kicad (5.1.6)-1		Id: 1/1