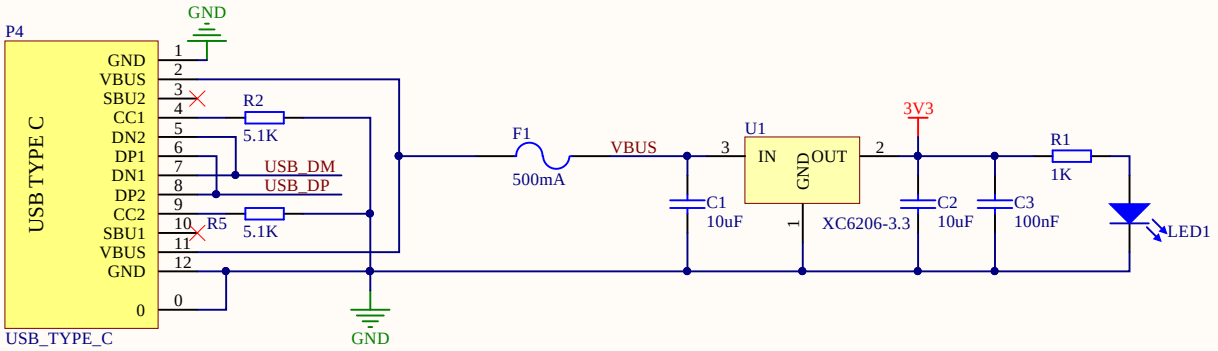

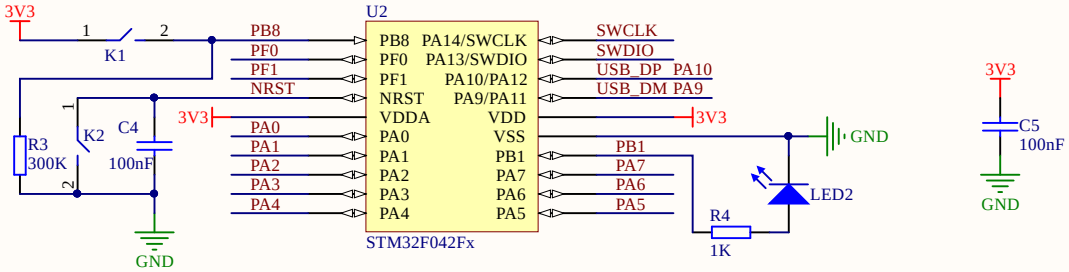

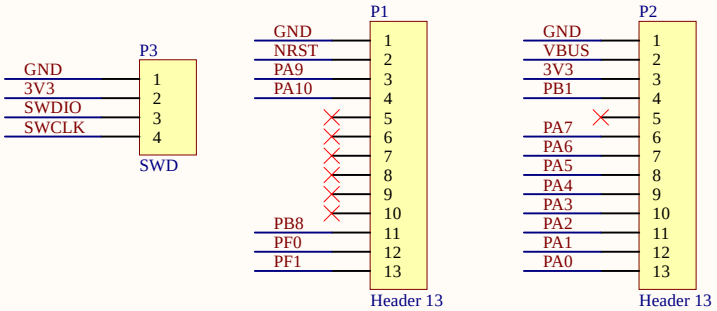

Title		
Size A4	Number	Revision
Date: 2023/10/29		Sheet of
File: C:\Users\..\stm32f042.SchDoc		Drawn By: