EPLAN Software & Service
GmbH & Co. KG
An der alten Ziegelei 2
D-40789 Monheim
Phone. 02173/3964-0

Company / customer	PARS
Project description	Basic project with IEC identifier structure
Drawing number	IEC-BAS001
Commission	EPLAN
Manufacturer (company)	EPLAN Software & Service GmbH & Co. KG
Path	EPLAN sample project
Project name	FINISHEER
Make	M.T
Type	AT78
Place of installation	+ET1
Responsible for project	
Part feature	Sonderlackierung

Created on 1/11/2016
Edit date 2/8/2016 by (short name) Electronic Number of pages 21

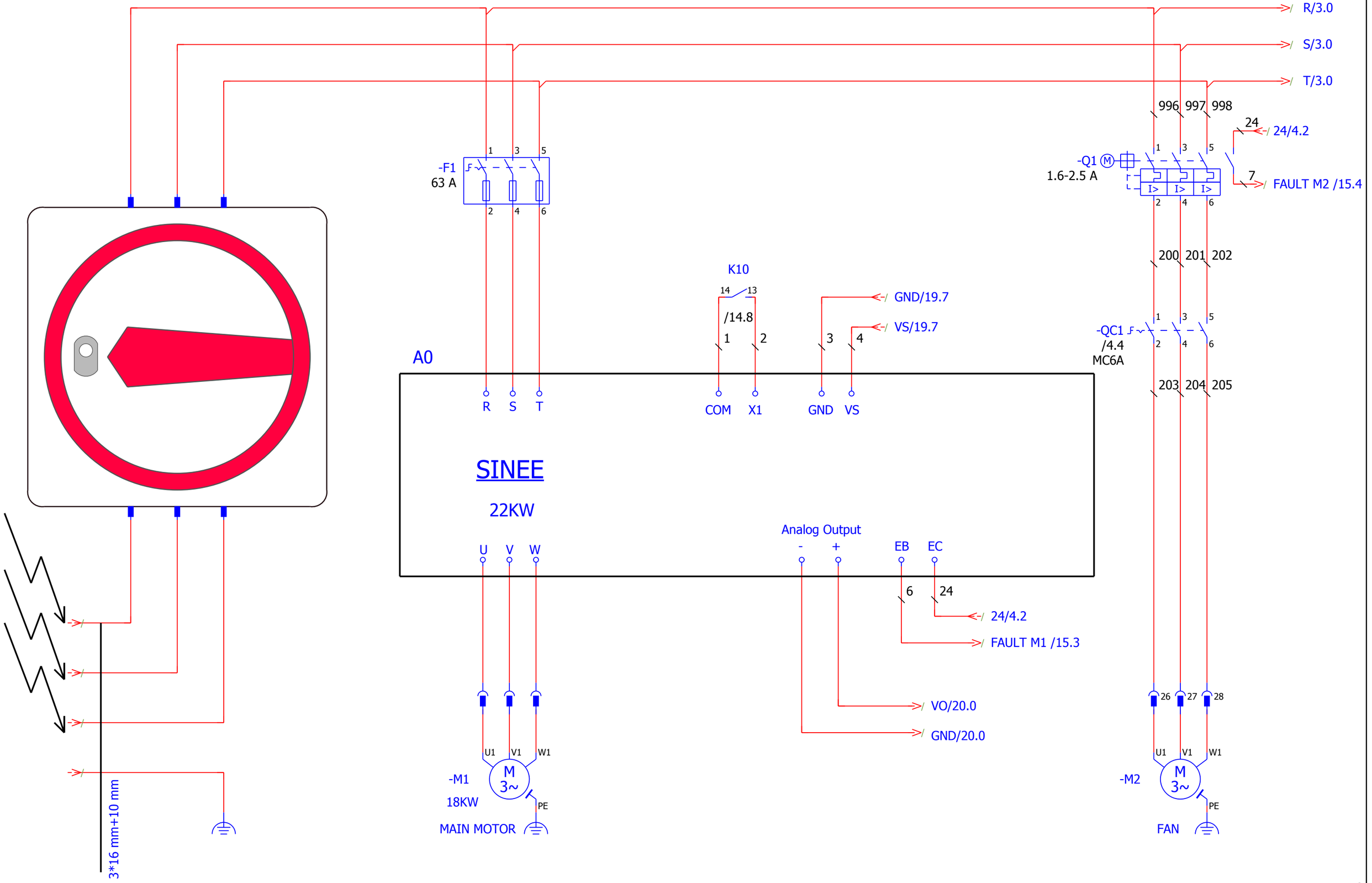

1 3

			Date	10/9/2016	EPLAN	EPLAN Software & Service GmbH & Co. KG		=	
			Ed. by	Electronic				+	
			Appr		Basic project with IEC identifier structure			IEC-BAS001	Page 2
Modification	Date	Name	Original		Replacement for	Replaced by			Pg 21

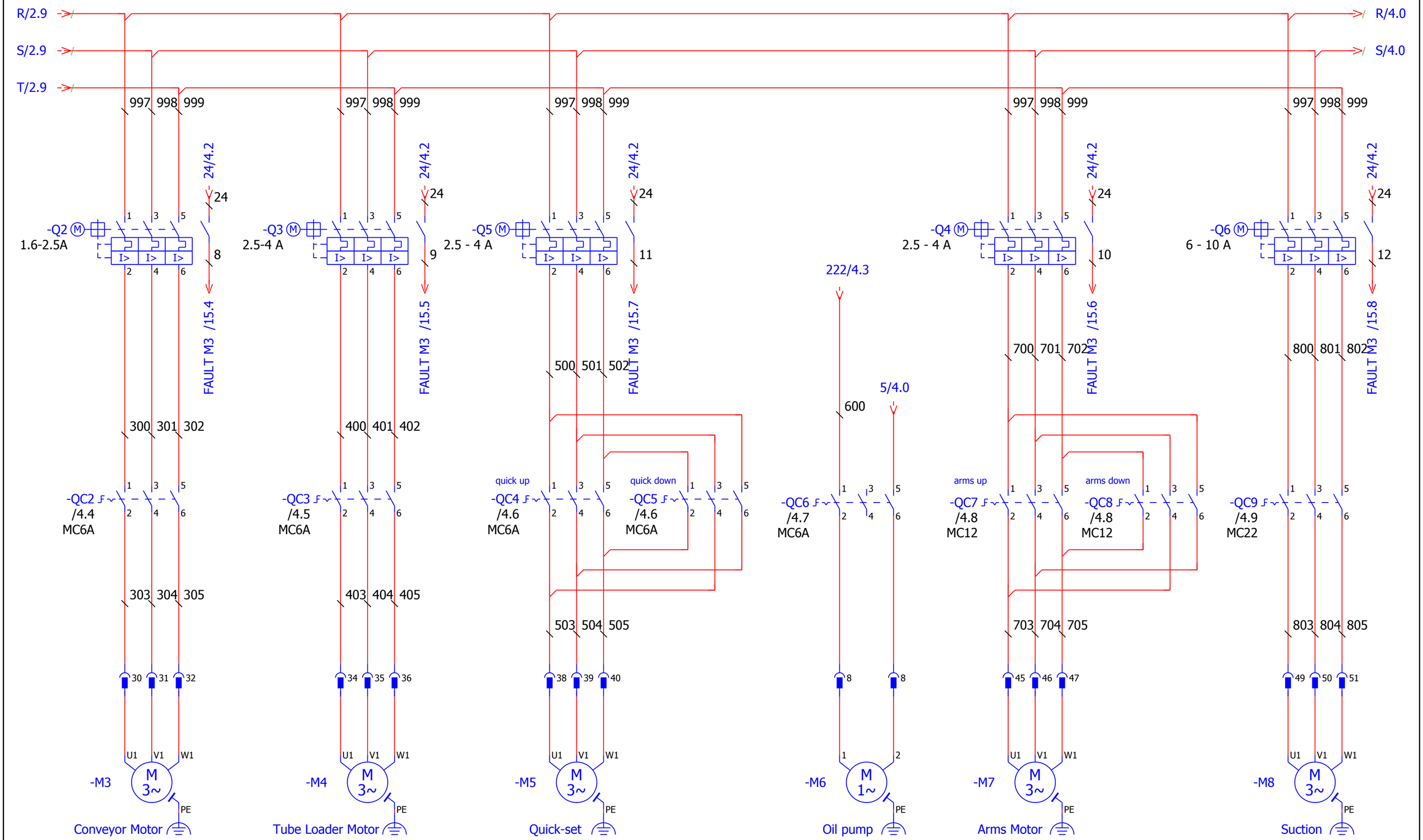

			Date	2/18/2016	EPLAN	EPLAN Software & Service GmbH & Co. KG		=	
			Ed. by	Electronic	Basic project with IEC identifier structure			+	
			Appr					IEC-BAS001	Page 3
Modification	Date	Name	Original		Replacement for	Replaced by			Pg 21

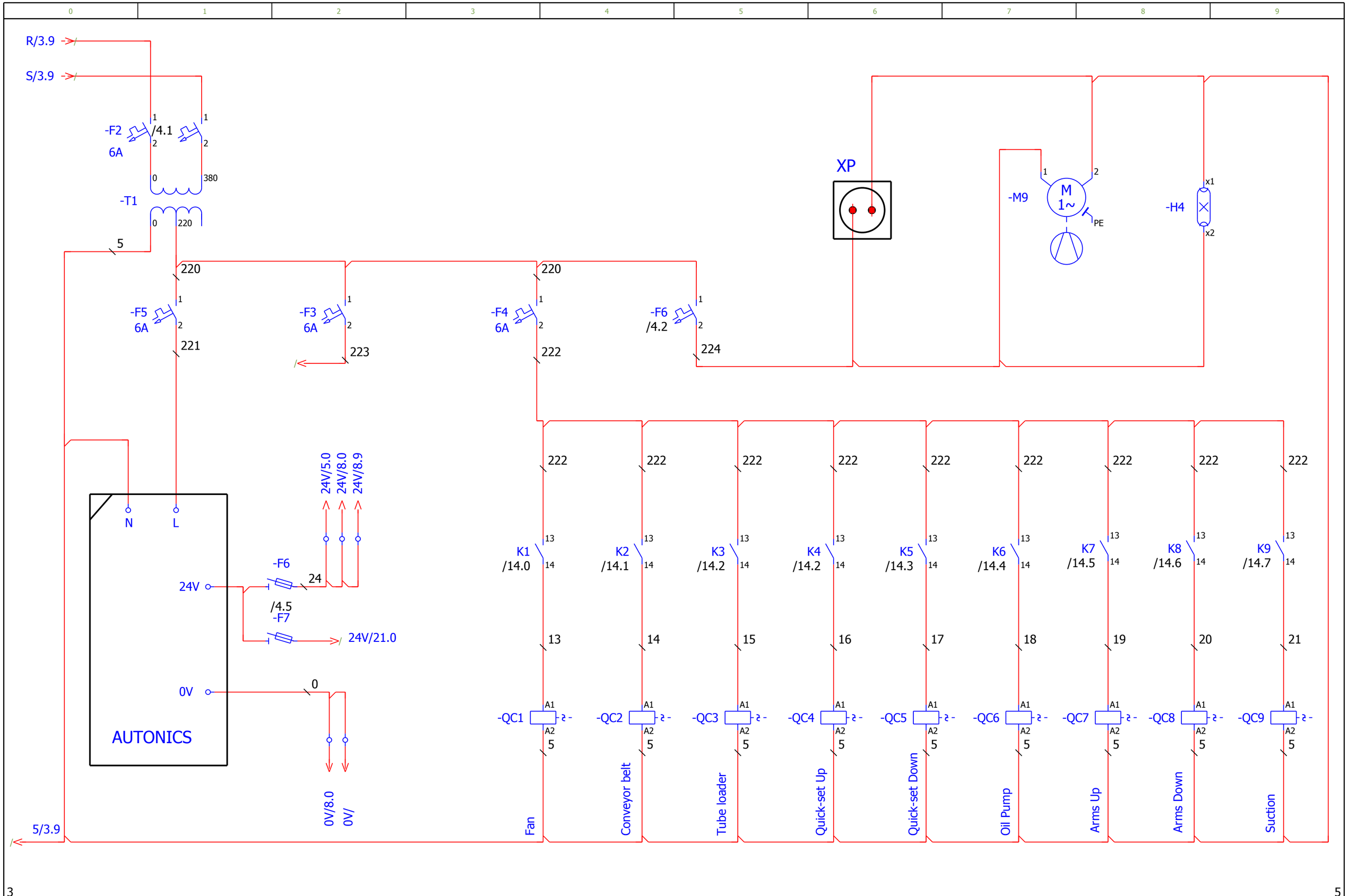

3 5

			Date	10/8/2016	EPLAN	EPLAN Software & Service GmbH & Co. KG		=	
			Ed. by	Electronic				+	
			Appr		Basic project with IEC identifier structure		IEC-BAS001	Page	4
Modification	Date	Name	Original		Replacement for	Replaced by		Pg	21

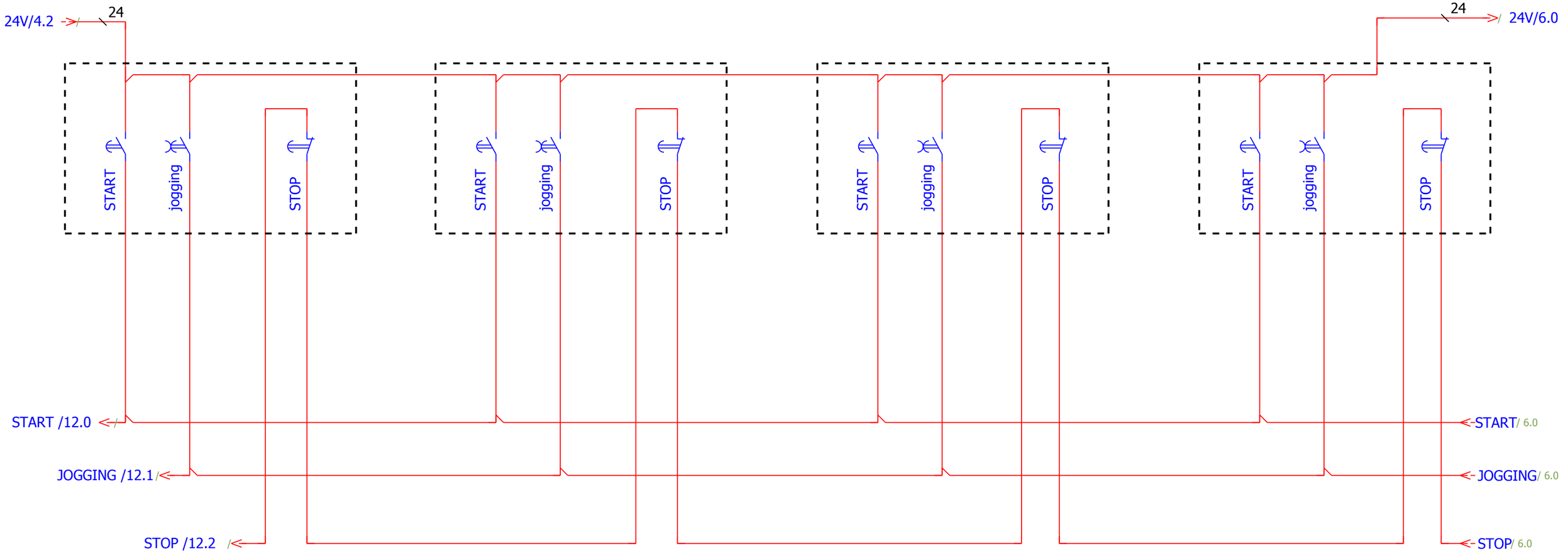

Start machine push botton
Jogging machine push botton
Stop machine push botton

Start machine push botton
Jogging machine push botton
Stop machine push botton

Start machine push botton
Jogging machine push botton
Stop machine push botton

Start machine push botton
Jogging machine push botton
Stop machine push botton

4 6

			Date	1/17/2016	EPLAN	EPLAN Software & Service GmbH & Co. KG		=	
			Ed. by	Electronic	Basic project with IEC identifier structure			+	
			Appr					IEC-BAS001	Page 5
Modification	Date	Name	Original		Replacement for	Replaced by			Pg 21

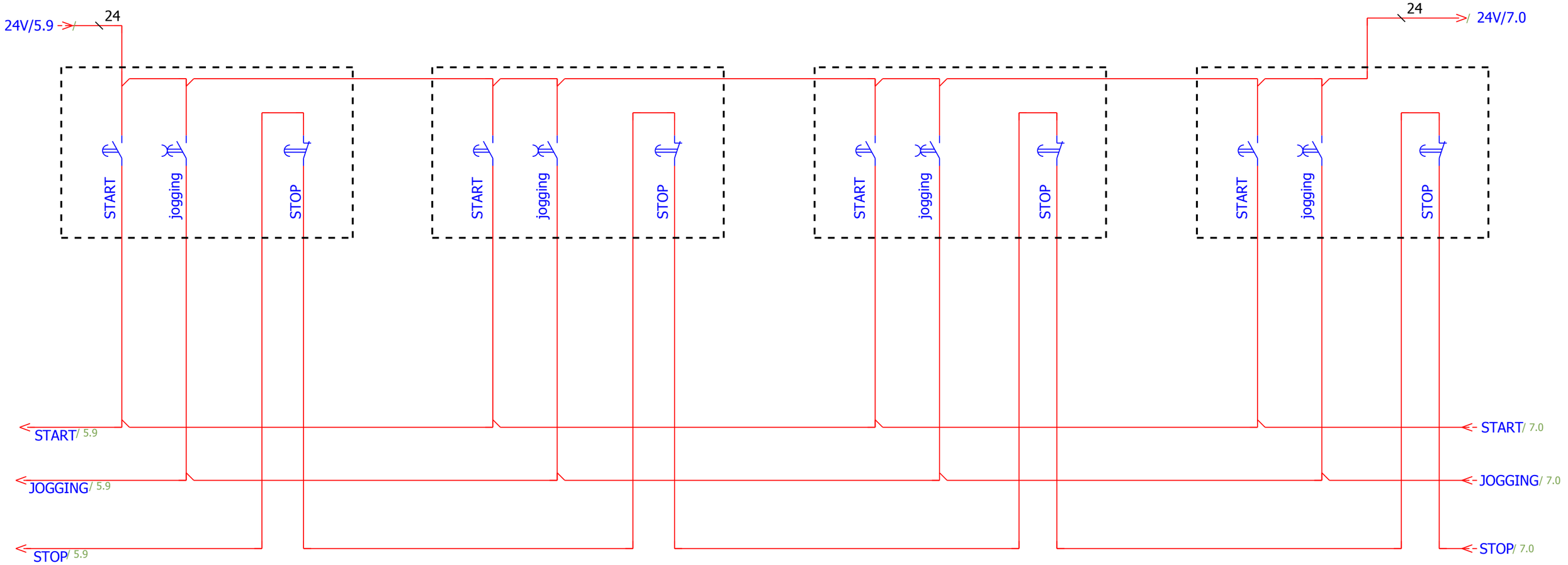

Start machine push botton
Jogging machine push botton
Stop machine push botton

Start machine push botton
Jogging machine push botton
Stop machine push botton

Start machine push botton
Jogging machine push botton
Stop machine push botton

Start machine push botton
Jogging machine push botton
Stop machine push botton

5 7

			Date	1/17/2016	EPLAN	EPLAN Software & Service GmbH & Co. KG		=	
			Ed. by	Electronic				+	
			Appr		Basic project with IEC identifier structure			IEC-BAS001	Page 6
Modification	Date	Name	Original		Replacement for	Replaced by			Pg 21

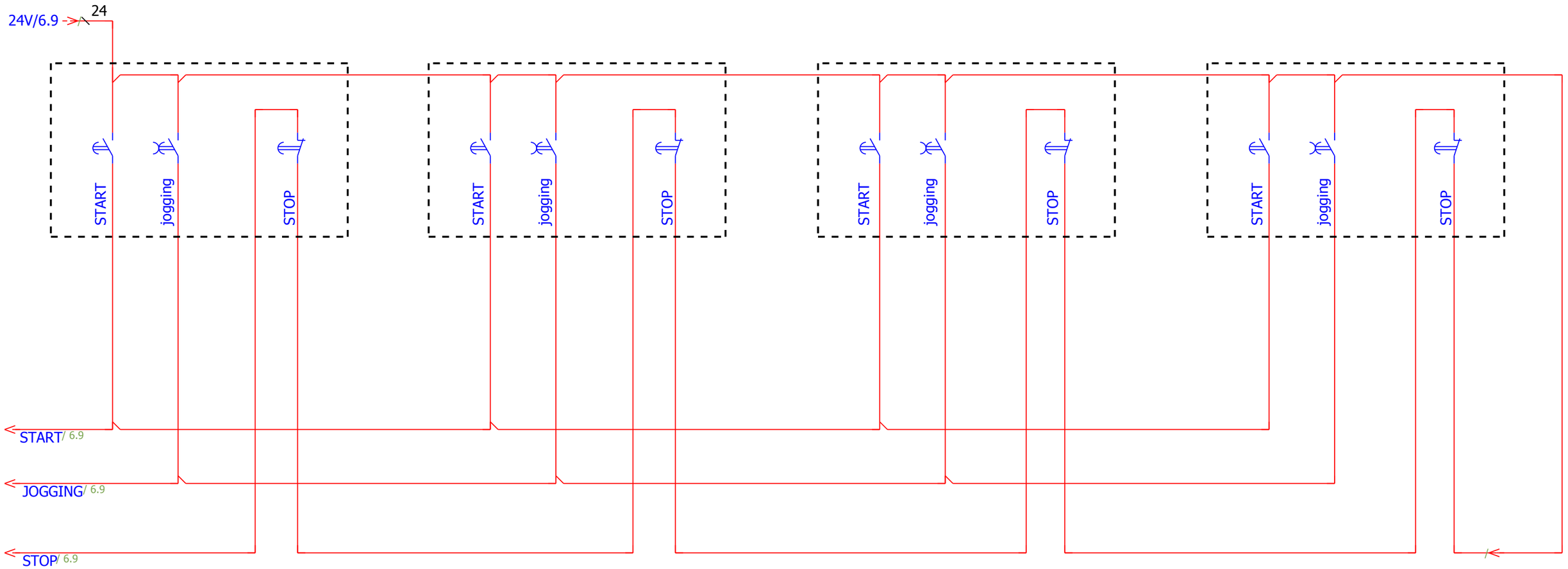

6 8

			Date	1/19/2016	EPLAN	EPLAN Software & Service GmbH & Co. KG		=
			Ed. by	Electronic				+
			Appr		Basic project with IEC identifier structure		IEC-BAS001	Page 7
Modification	Date	Name	Original		Replacement for	Replaced by		Pg 21

SECTION 1...

...SECTION 20

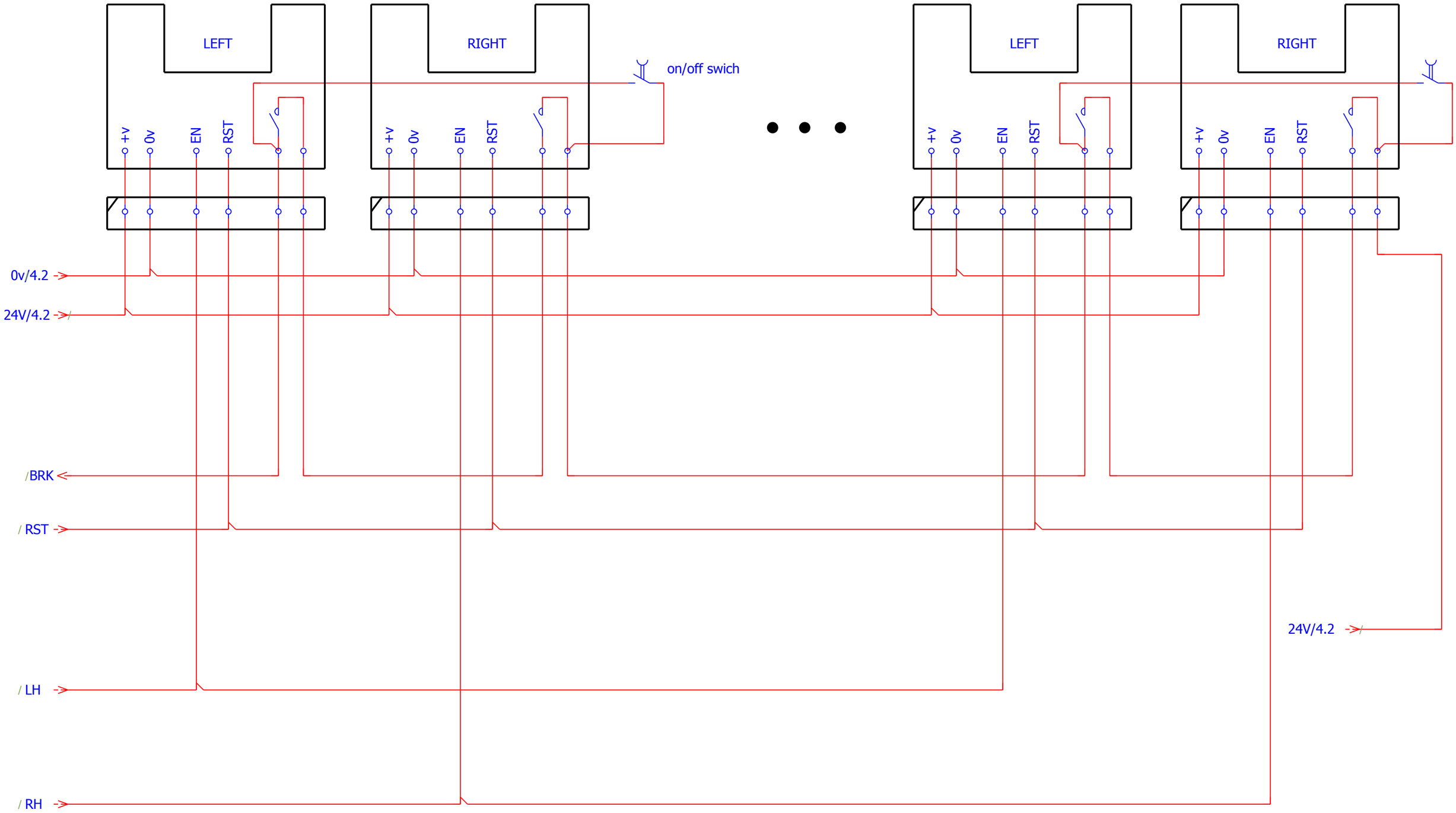

7 9

			Date	10/8/2016	EPLAN	EPLAN Software & Service GmbH & Co. KG		=	
			Ed. by	Electronic				+	
			Appr		Basic project with IEC identifier structure			IEC-BAS001	Page 8
Modification	Date	Name	Original		Replacement for	Replaced by			Pg 21

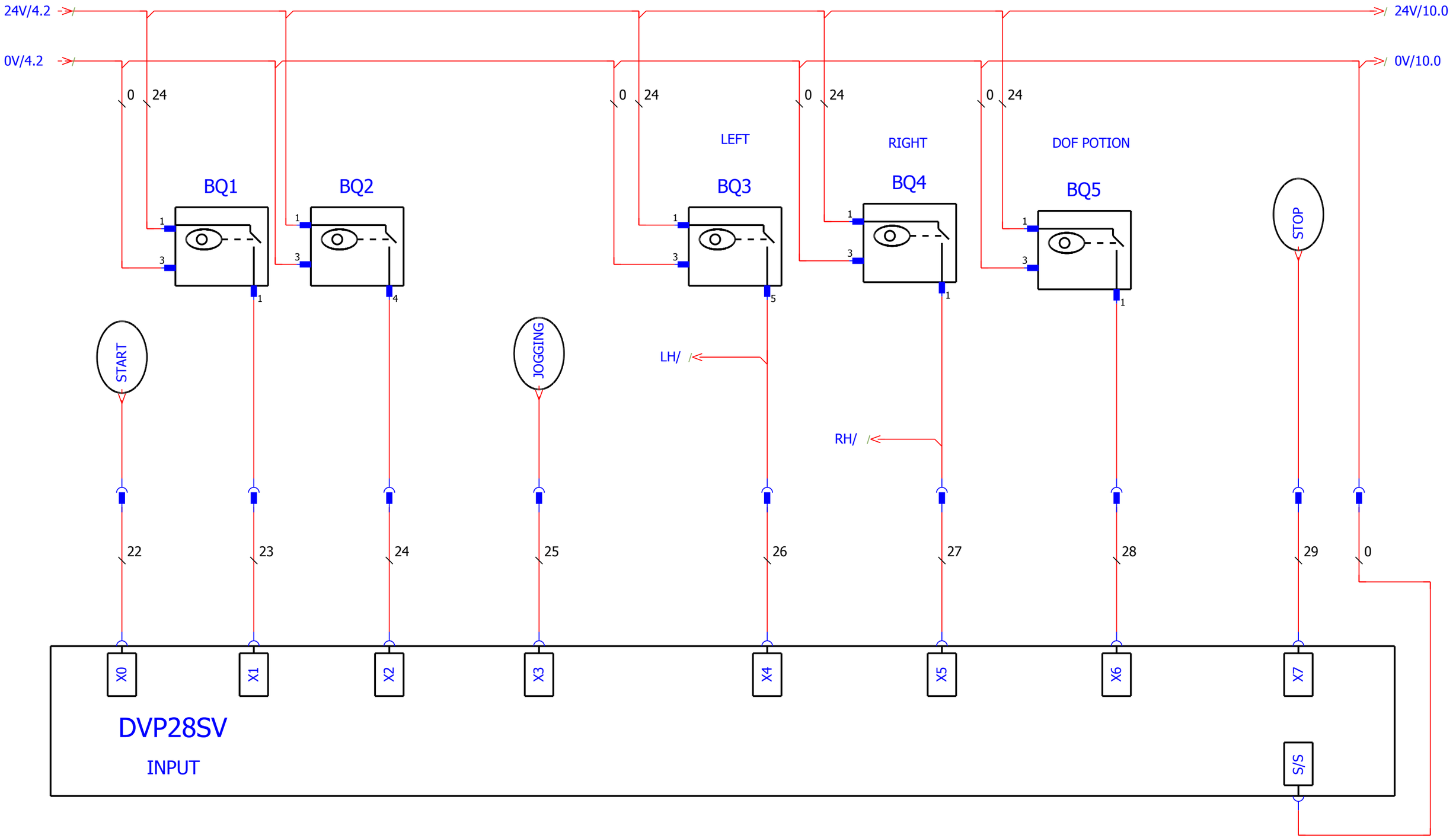

8 10

			Date	10/9/2016	EPLAN	EPLAN Software & Service GmbH & Co. KG		=	
			Ed. by	Electronic				+	
			Appr		Basic project with IEC identifier structure			IEC-BAS001	Page 9
Modification	Date	Name	Original		Replacement for	Replaced by			Pg 21

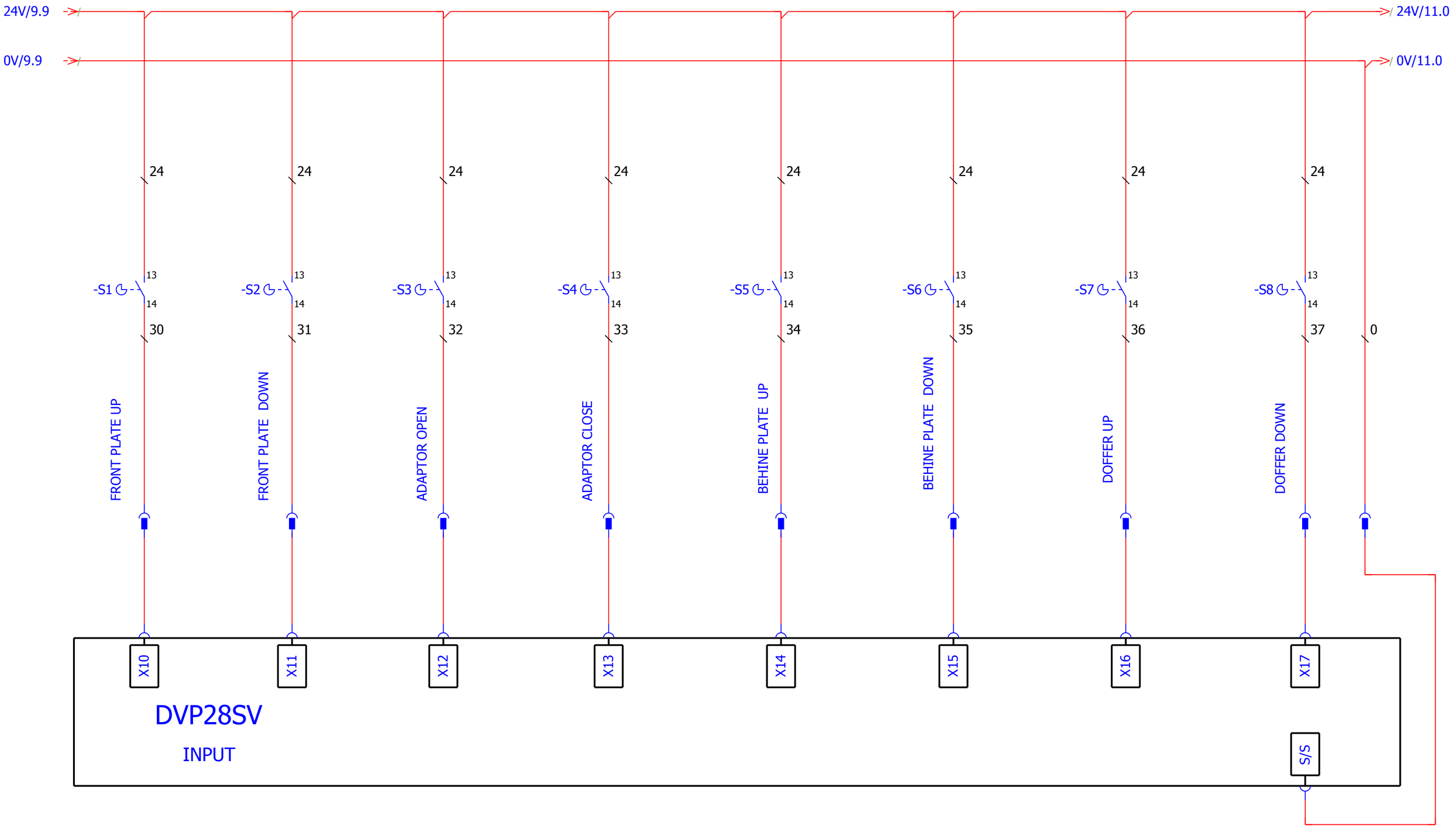

			Date	10/8/2016	EPLAN	EPLAN Software & Service GmbH & Co. KG		=	
			Ed. by	Electronic	Basic project with IEC identifier structure			+	
			Appr					IEC-BAS001	Page 10
Modification	Date	Name	Original		Replacement for	Replaced by			Pg 21

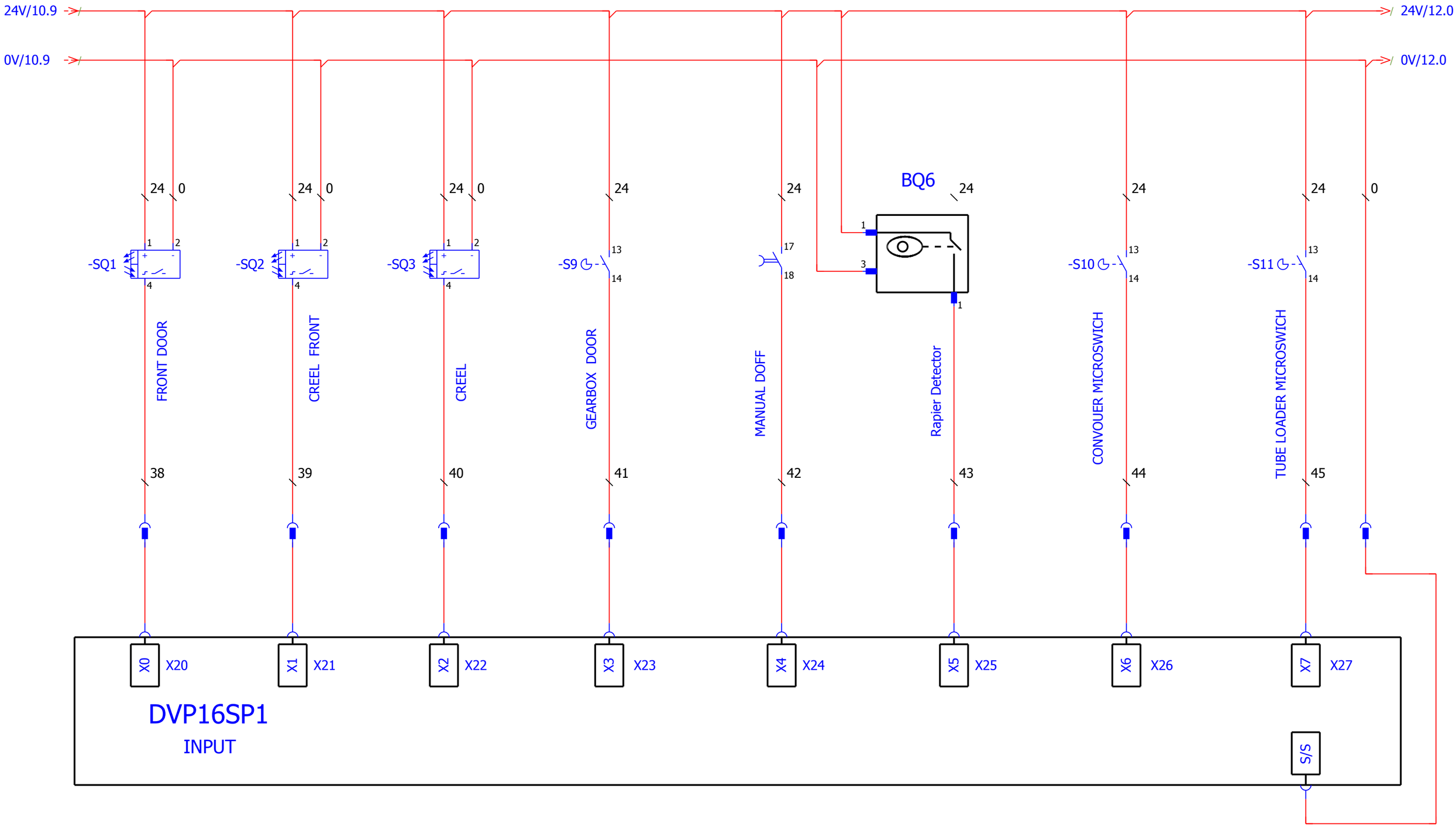

			Date	10/8/2016	EPLAN	EPLAN Software & Service GmbH & Co. KG		=	
			Ed. by	Electronic	Basic project with IEC identifier structure			+	
			Appr					IEC-BAS001	Page 11
Modification	Date	Name	Original		Replacement for	Replaced by			Pg 21

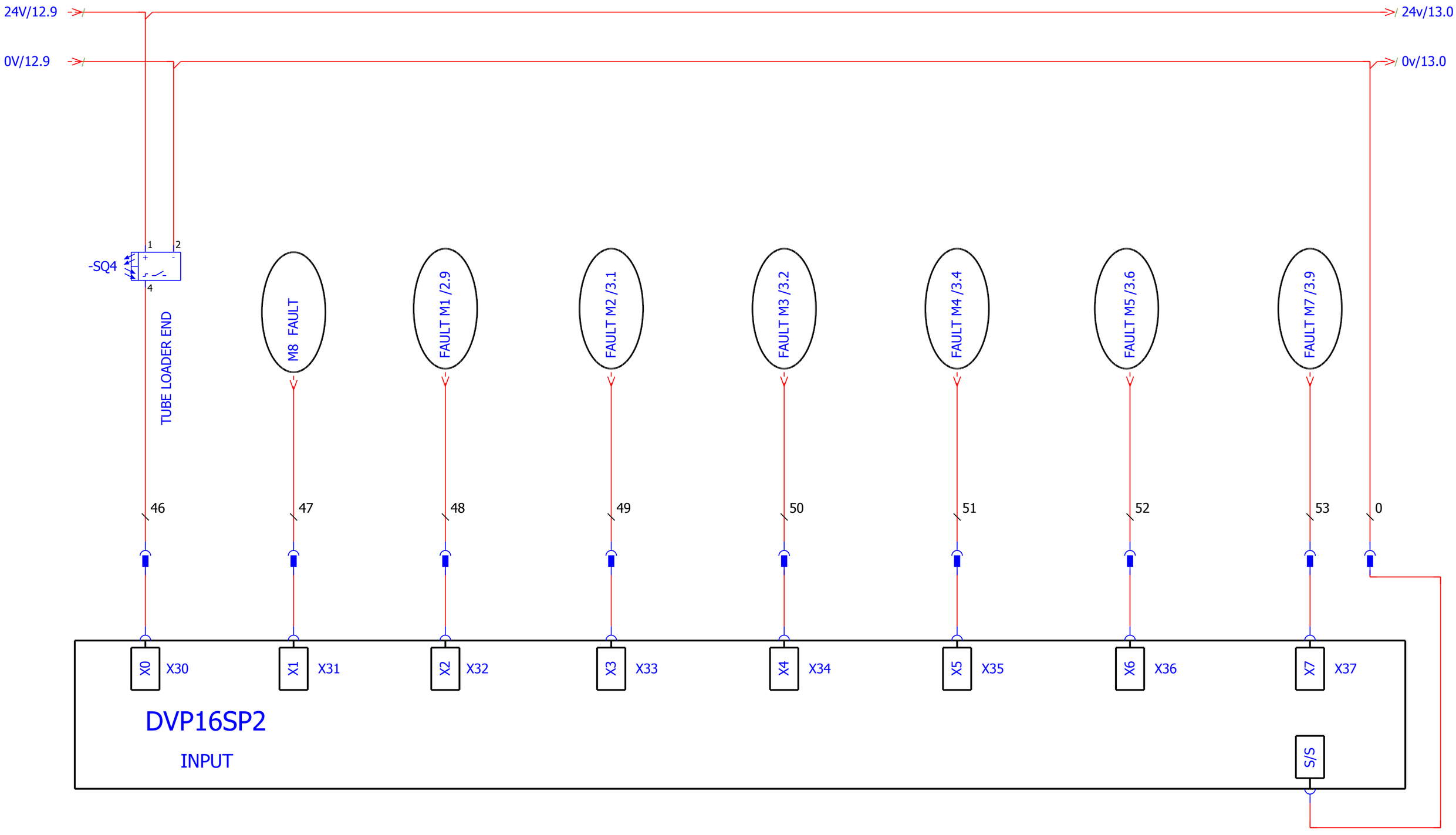

11

13

			Date	10/8/2016	EPLAN	EPLAN Software & Service GmbH & Co. KG		=	
			Ed. by	Electronic	Basic project with IEC identifier structure			+	
			Appr					IEC-BAS001	Page 12
Modification	Date	Name	Original		Replacement for	Replaced by			Pg 21

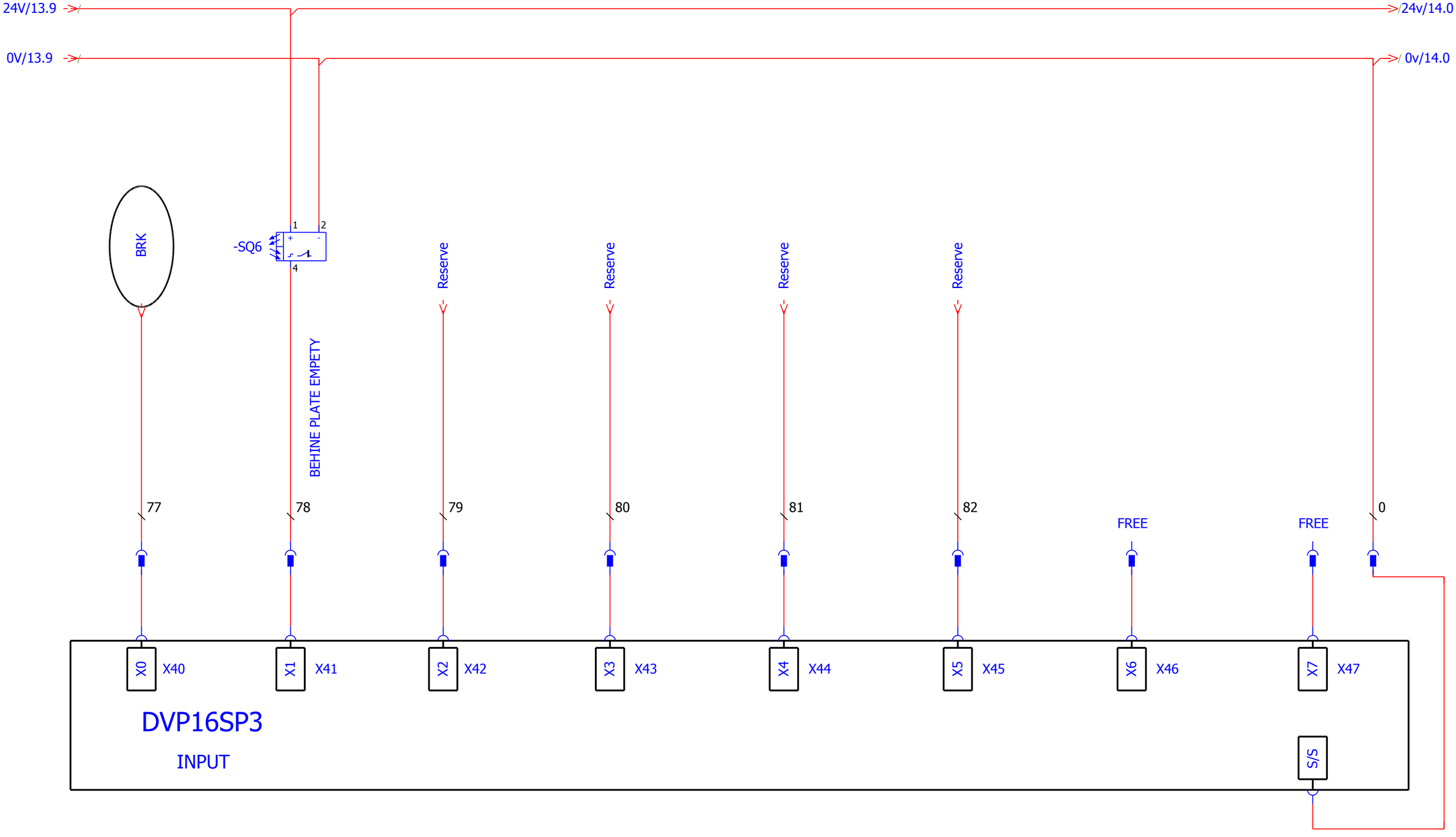

			Date	10/8/2016	EPLAN	EPLAN Software & Service GmbH & Co. KG		=	
			Ed. by	Electronic				+	
			Appr		Basic project with IEC identifier structure			IEC-BAS001	Page 13
Modification	Date	Name	Original		Replacement for	Replaced by			Pg 21

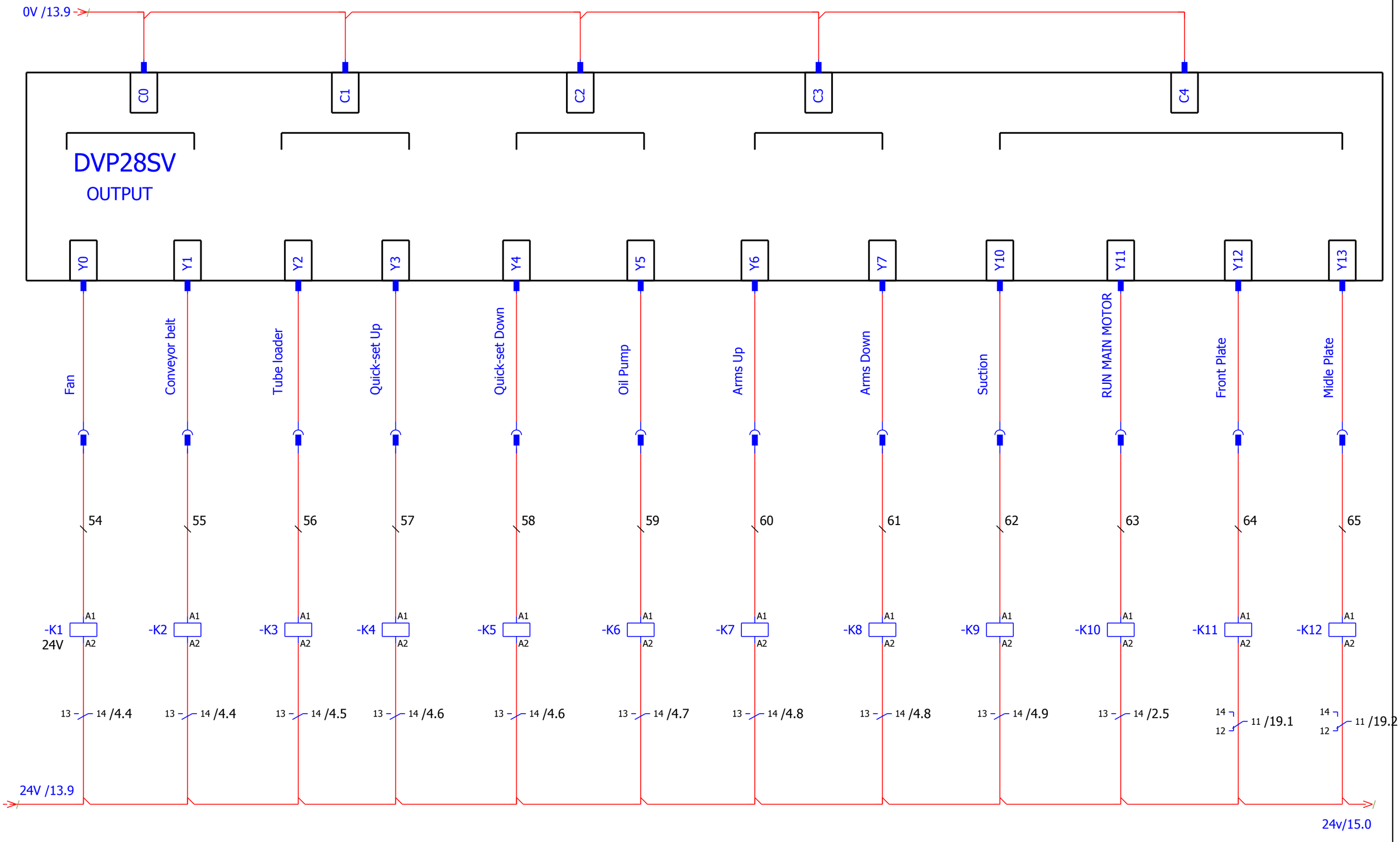

			Date	10/8/2016	EPLAN	EPLAN Software & Service GmbH & Co. KG		=	
			Ed. by	Electronic				+	
			Appr		Basic project with IEC identifier structure			IEC-BAS001	Page 14
Modification	Date	Name	Original		Replacement for	Replaced by			Pg 21

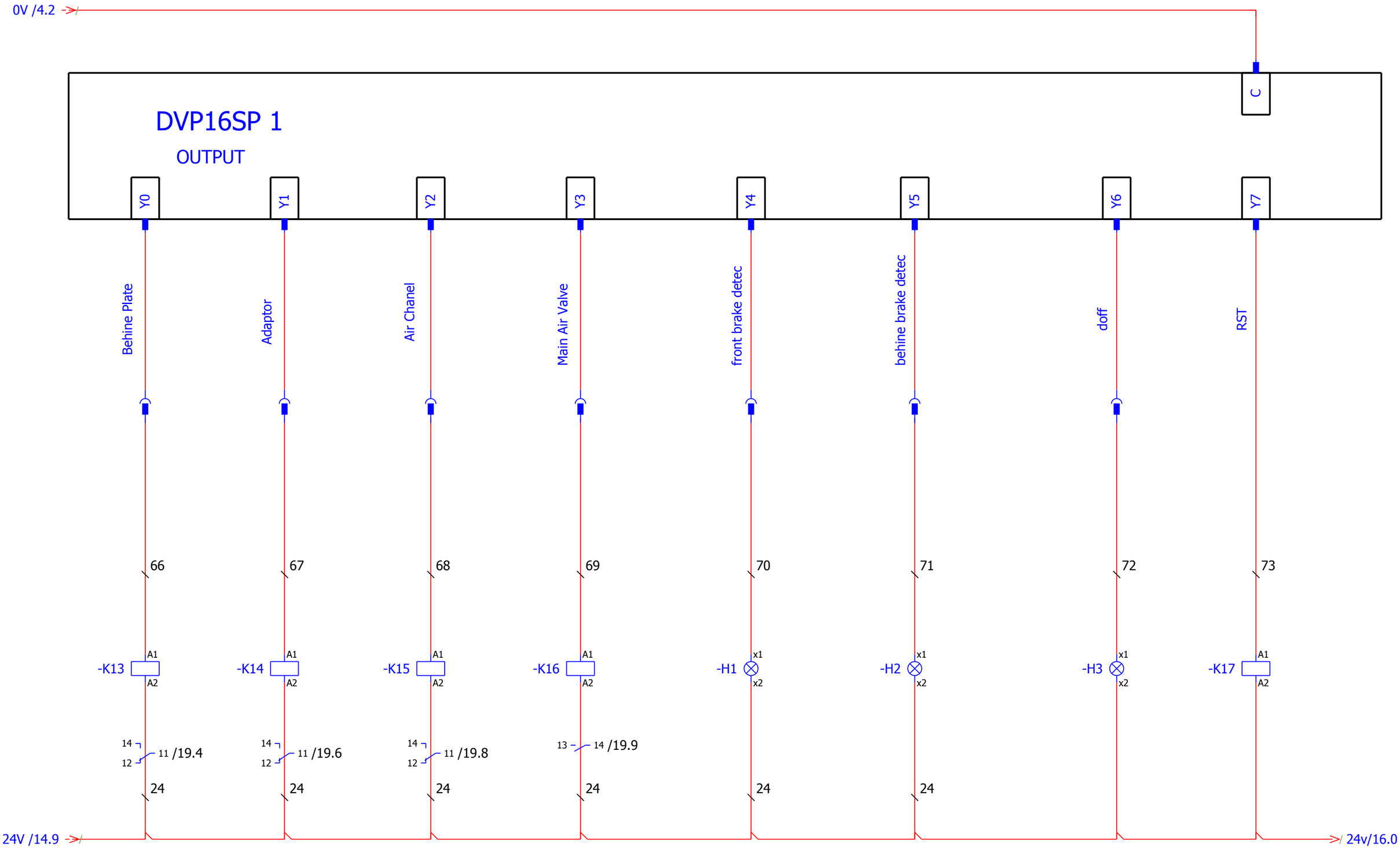

			Date	10/8/2016	EPLAN	EPLAN Software & Service GmbH & Co. KG		=	
			Ed. by	Electronic	Basic project with IEC identifier structure			+	
			Appr					IEC-BAS001	Page 15
Modification	Date	Name	Original		Replacement for	Replaced by			Pg 21

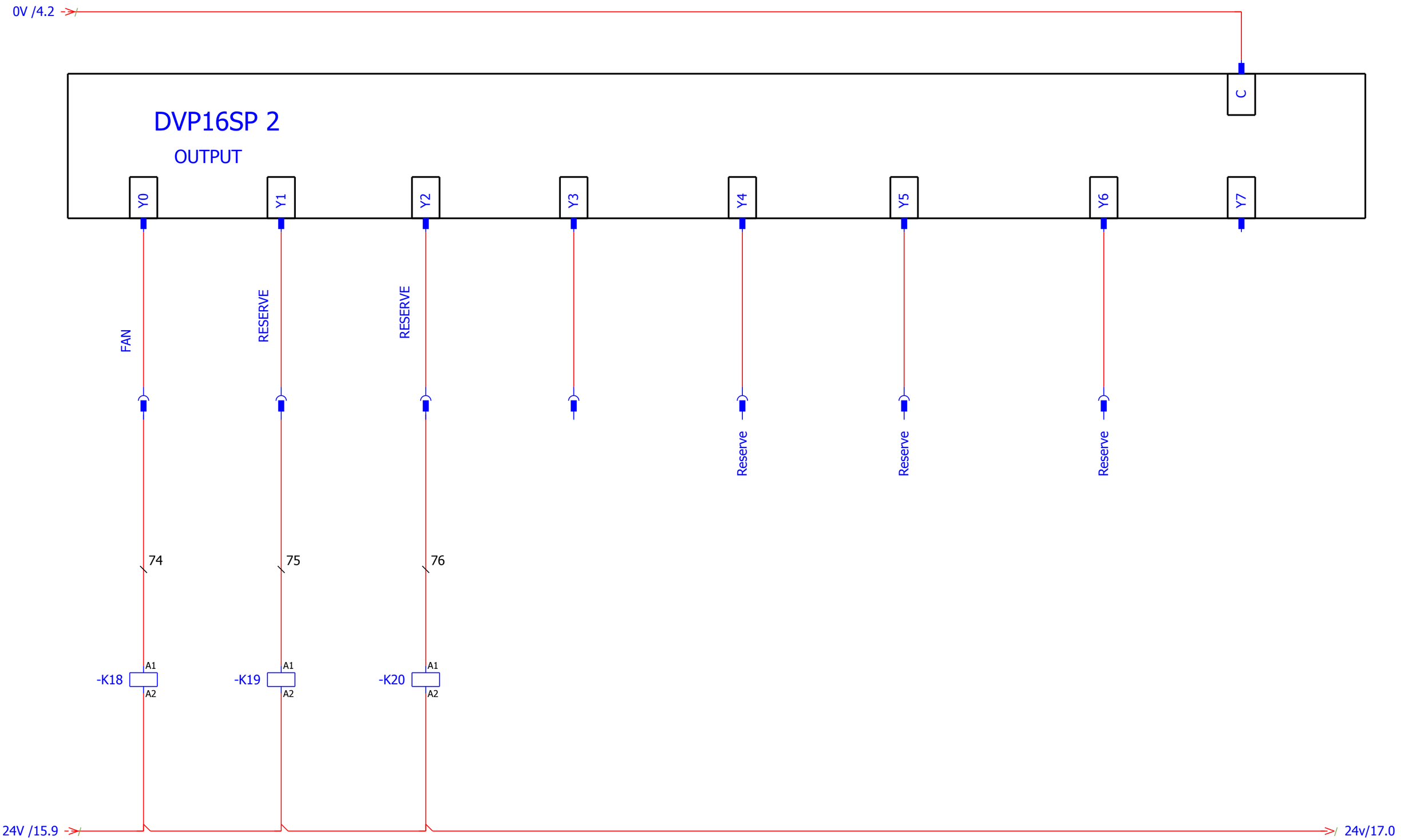

			Date	10/8/2016	EPLAN	EPLAN Software & Service GmbH & Co. KG		=	
			Ed. by	Electronic				+	
			Appr		Basic project with IEC identifier structure			IEC-BAS001	Page 16
Modification	Date	Name	Original		Replacement for	Replaced by			Pg 21

0V /4.2

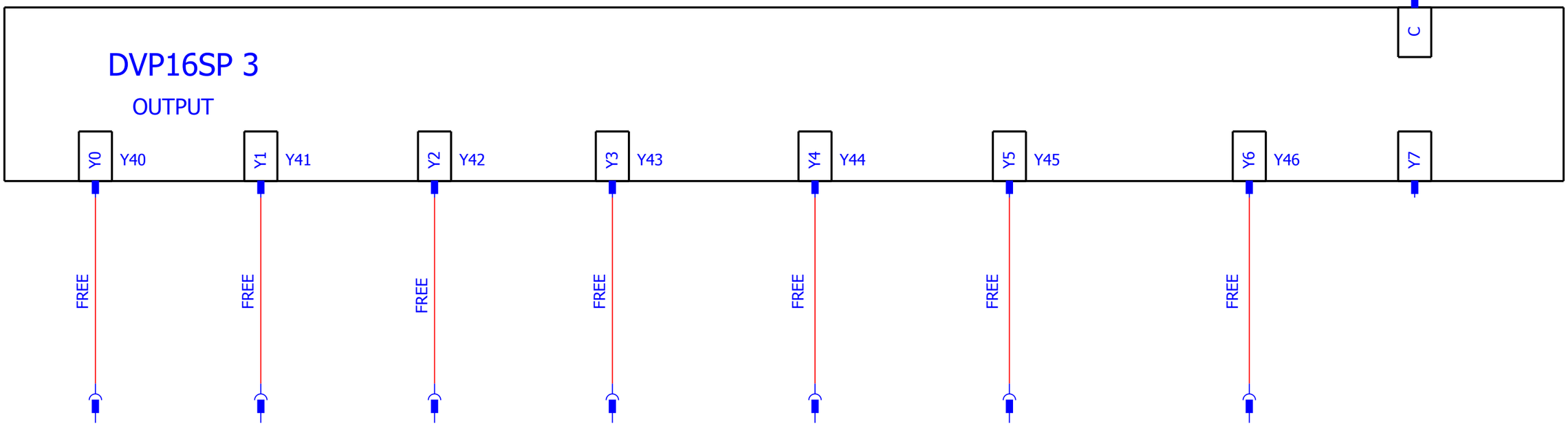

24V /16.9

24v/18.0

16

19

			Date	10/8/2016	EPLAN	EPLAN Software & Service GmbH & Co. KG		=	
			Ed. by	Electronic				+	
			Appr		Basic project with IEC identifier structure			IEC-BAS001	Page 17
Modification	Date	Name	Original		Replacement for	Replaced by			Pg 21

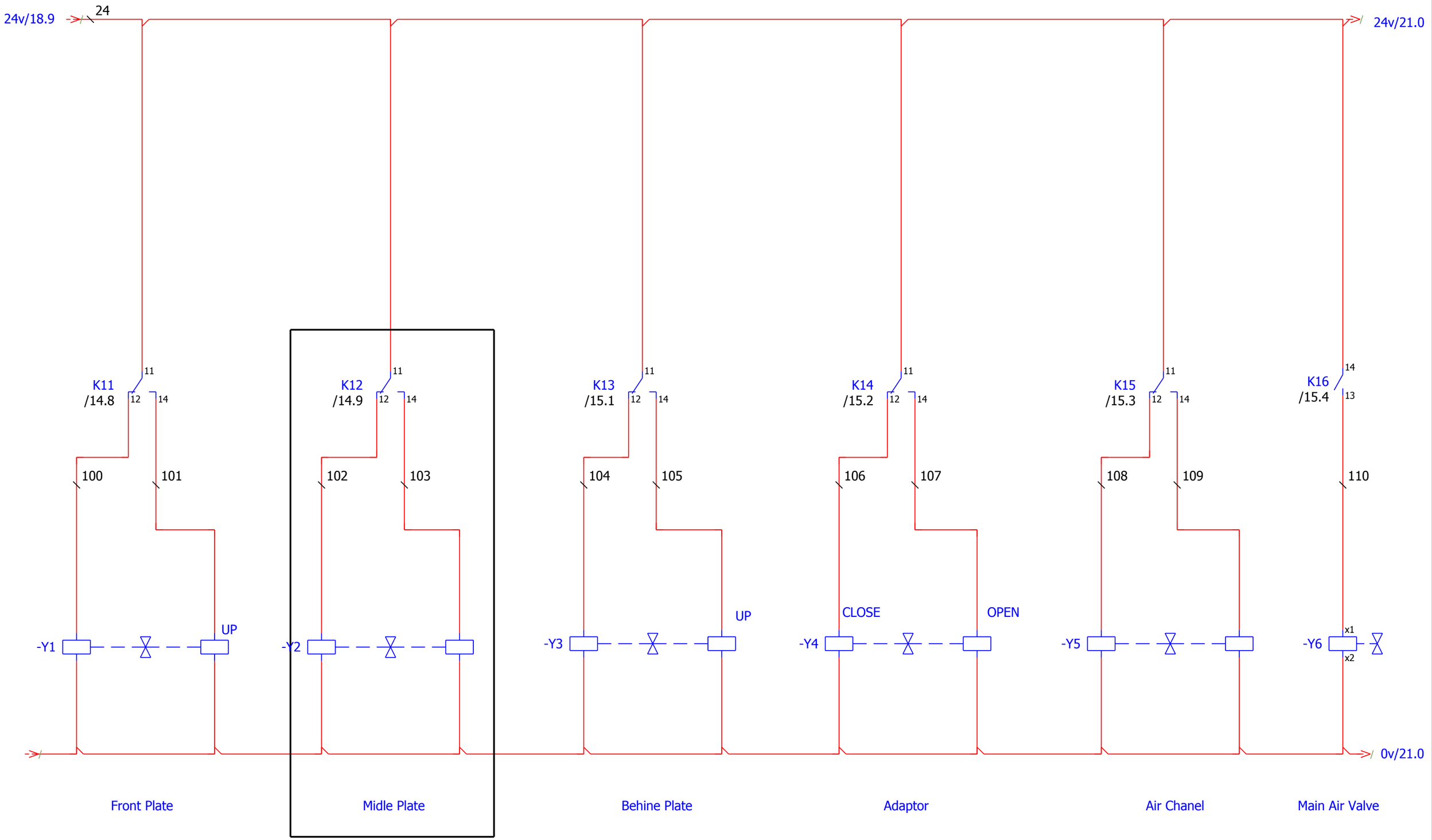

			Date	10/8/2016	EPLAN	EPLAN Software & Service GmbH & Co. KG			=
			Ed. by	Electronic	Basic project with IEC identifier structure				+
			Appr					IEC-BAS001	Page 19
Modification	Date	Name	Original		Replacement for	Replaced by			Pg 21

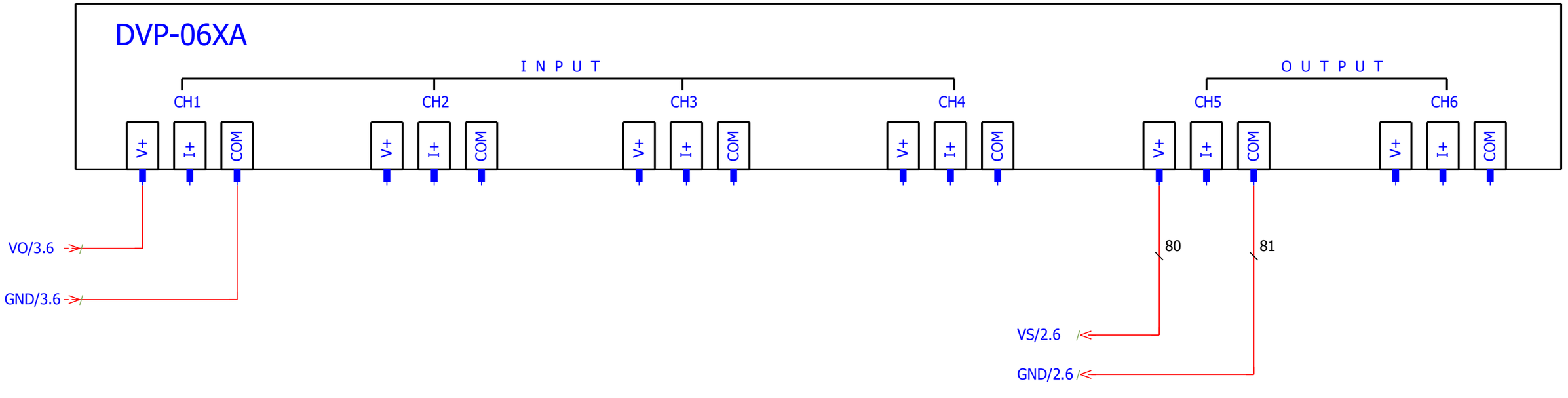

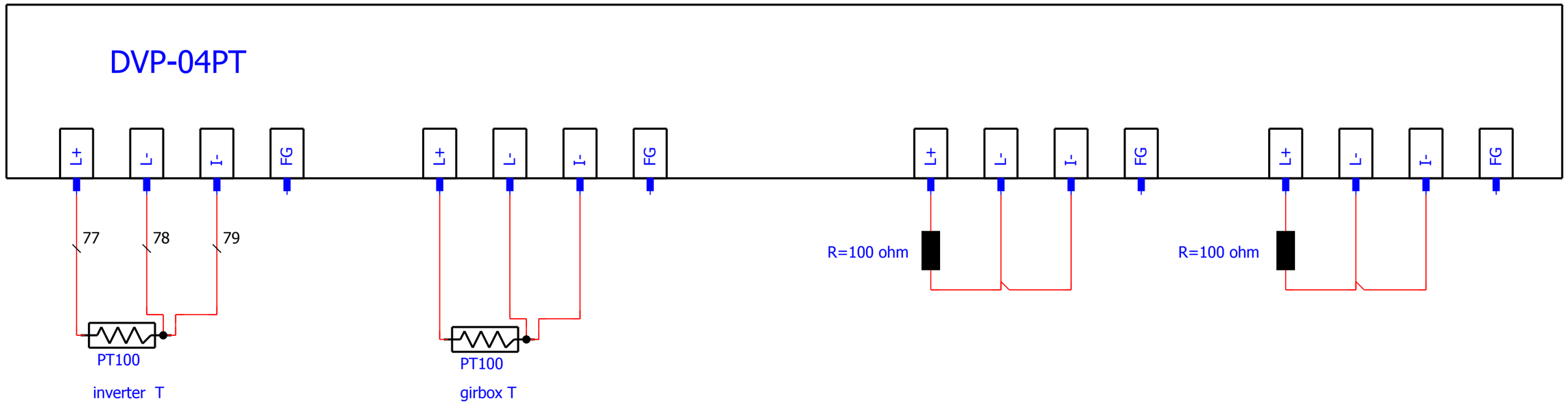

			Date	10/9/2016	EPLAN	EPLAN Software & Service GmbH & Co. KG		=	
			Ed. by	Electronic				+	
			Appr		Basic project with IEC identifier structure			IEC-BAS001	Page 20
Modification	Date	Name	Original		Replacement for	Replaced by			Pg 21

A7

0V
24V
GND

A1 A2 A3 A4 A5 A6

DVP28SV DVP-16SP DVP-16SP DVP-16SP DVP-06XA DVP-04PT

24V 0V 24V 0V 24V 0V

24v/19.9

24

0

20 22

			Date	10/8/2016	EPLAN	EPLAN Software & Service GmbH & Co. KG		=
			Ed. by	Electronic	Basic project with IEC identifier structure			+
			Appr				IEC-BAS001	Page 21
Modification	Date	Name	Original		Replacement for	Replaced by		Pg 21

X1

1	2	3	4	5	6	7	8	9	10	11	12	13	14	15	16	17	18	19	20	21	22	23	24	25	26	27	28	29	30	31	32	33	34	35	36	37	38	39	40	41	42	43	44	45	46	47	48	49	50
24v	Start	jogging	Stop	Manual	BQ1	24v	0v	BQ2	24v	0v	BQ3	24v	0v	BQ4	24v	0v	BQ5	24v	0v	BQ6	24v	0v	SQ1	24v	0v	SQ2	24v	0v	SQ3	24v	0v	SQ4	S1	24V	S2	S3	24V	S4	S5	24V	S6	S7	24V	S8	S9	24V	S10	S11	24V

X2

1	2	3	4	5	6	7	8	9	10	11	12	13	14	15	16	17	18	19	20	21	22	23	24	25	26	27	28	29	30	31	32	33	34	35	36	37	38	39	40	41	42	43	44	45	46	47	48	49	50	51
24v	0V	LH	RH	RST	BRK	24v	L+	L-	I -	Y1.1	Y1.2	Y2.1	Y2.2	Y3.1	Y3.2	Y4.1	Y4.2	Y5.1	Y5.2	Y6	0V		24v	E	U2	V2	W2	E	U3	V3	W3	E	U4	V4	W4	E	U5	V5	W5	E	U6	V6	E	U7	V7	W7	E	S11	24V	

X3

1	2	3	4	5	6	7	8	9	10	11	12	13	14	15	16	17	18	19
0v	0v	0v	0v	24v	24v	24v	24v	78	79	80	81	120	121	122	123	5	5	5

			Date	10/3/2016	EPLAN	EPLAN Software & Service GmbH & Co. KG	=
			Ed. by	Electronic			+
			Appr		Basic project with IEC identifier structure		IEC-BAS001 Page 22
Modification	Date	Name	Original		Replacement for	Replaced by	Pg 21