EPLAN Software & Service
GmbH & Co. KG
An der alten Ziegelei 2
D-40789 Monheim
Phone. 02173/3964-0

Company / customer	EPLAN
Project description	Basic project with IEC identifier structure
Drawing number	IEC-BAS001
Commission	EPLAN
Manufacturer (company)	EPLAN Software & Service GmbH & Co. KG
Path	EPLAN sample project
Project name	Compresure 2
Make	Universal VESA
Type	AT78
Place of installation	+ET1
Responsible for project	
Part feature	Sonderlackierung

Created on 3/7/2016
Edit date 3/7/2016 by (short name) Electronic Number of pages 3

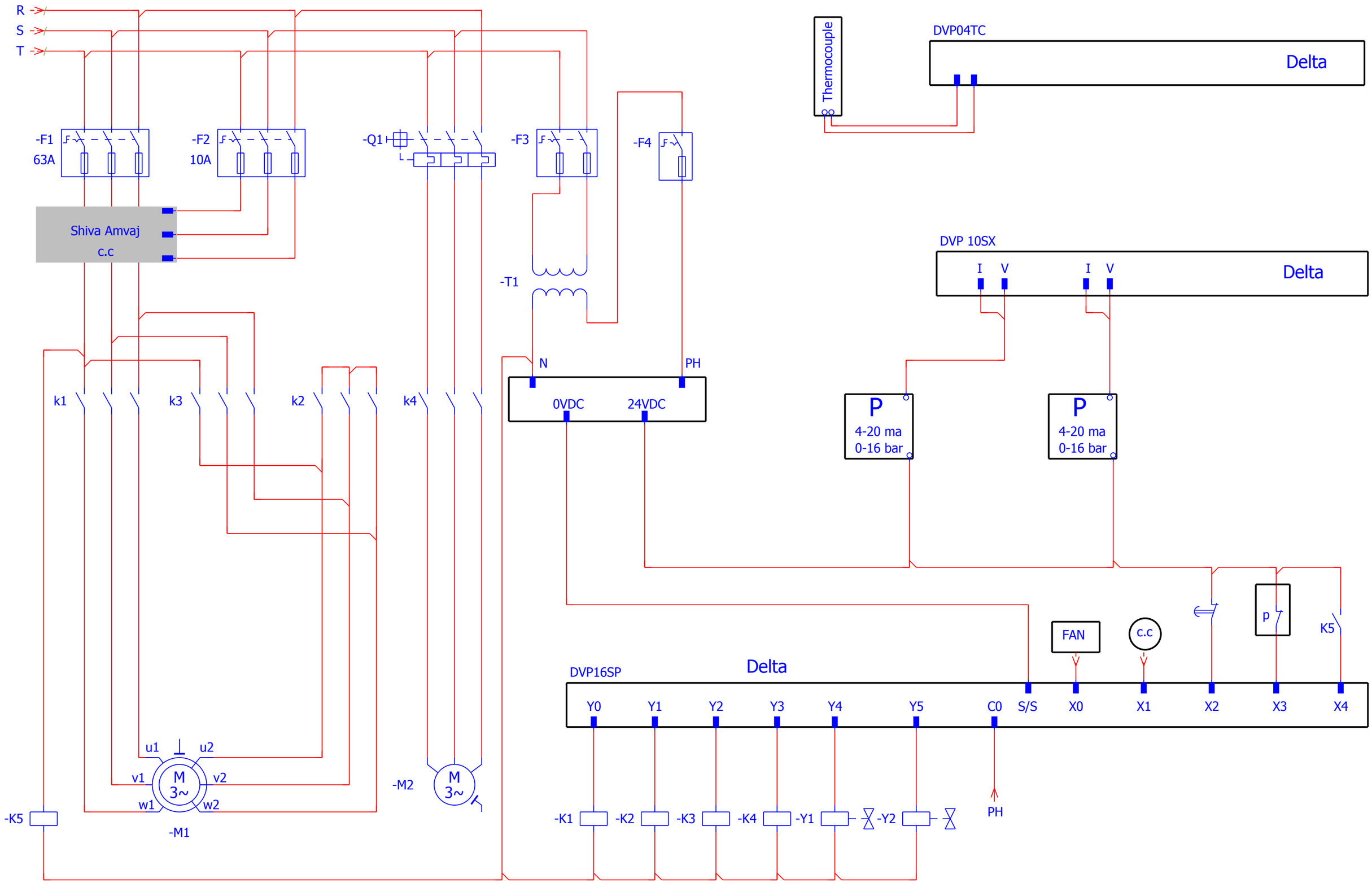

1

F26_001.f26

			Date	8/4/2016	EPLAN	EPLAN Software & Service GmbH & Co. KG			=	
			Ed. by	Electronic					+	
			Appr		Basic project with IEC identifier structure			IEC-BAS001		Page 2
Modification	Date	Name	Original		Replacement for	Replaced by				Pg 3

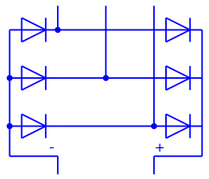

SAM electronic

	Customer: Short name
Project description	Project description
Drawing number	Drawing number
Commission	Commission
Manufacturer (company)	Company name
Path	Supplementary field [1]
Project name	Project name
Make	Make
Type	Type
Place of installation	Place of installation
Responsible for project	Responsible for project
Part feature	Part features
Created on	Creation date
Edit date	Modification date (project comparison)
	Last editor
	Number of pages
	Total pages