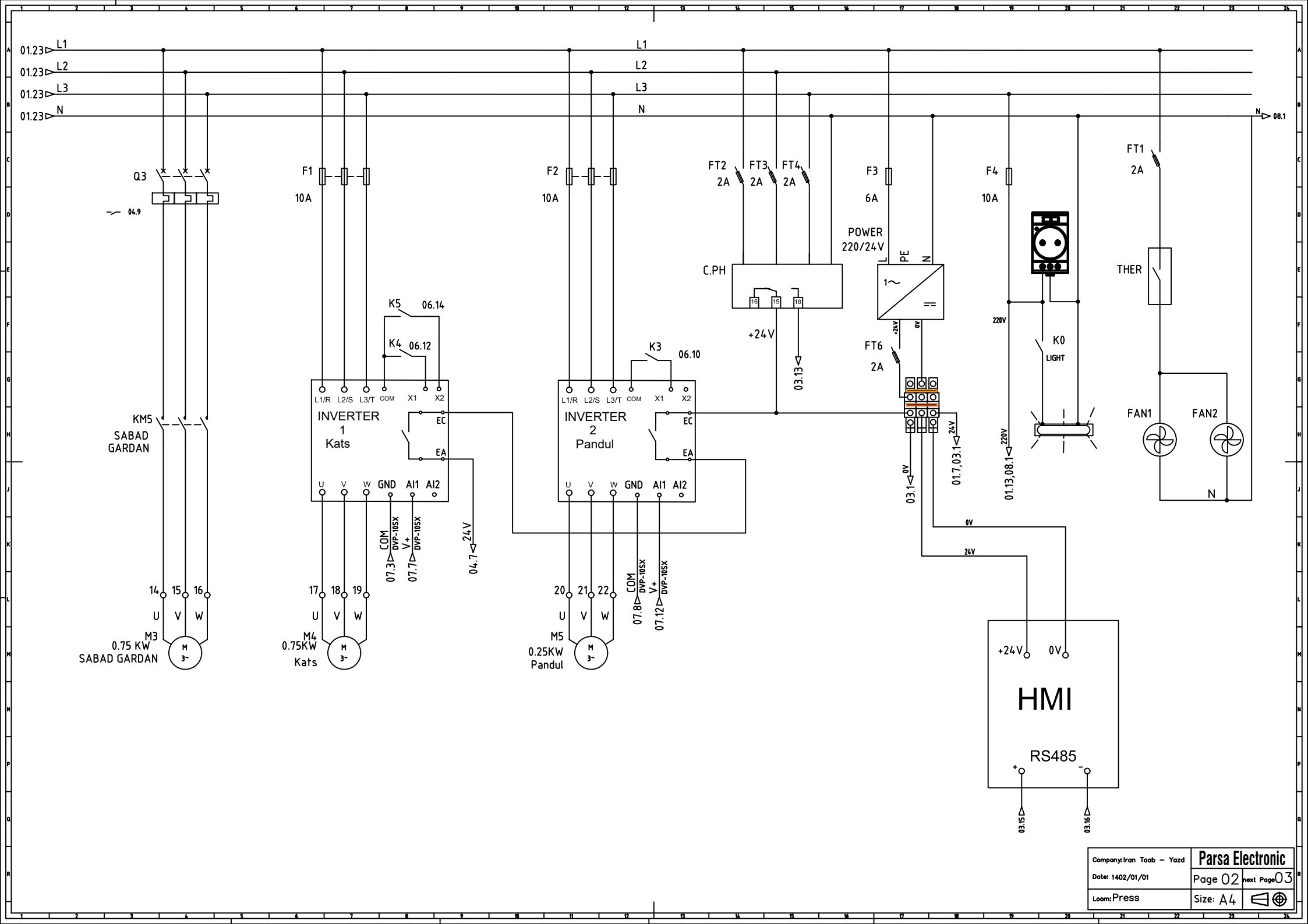

Company: Iran Taab – Yazd	Parsa Electronic
Date: 1402/01/01	Page 02 next Page 03
Loom: Press	Size: A4