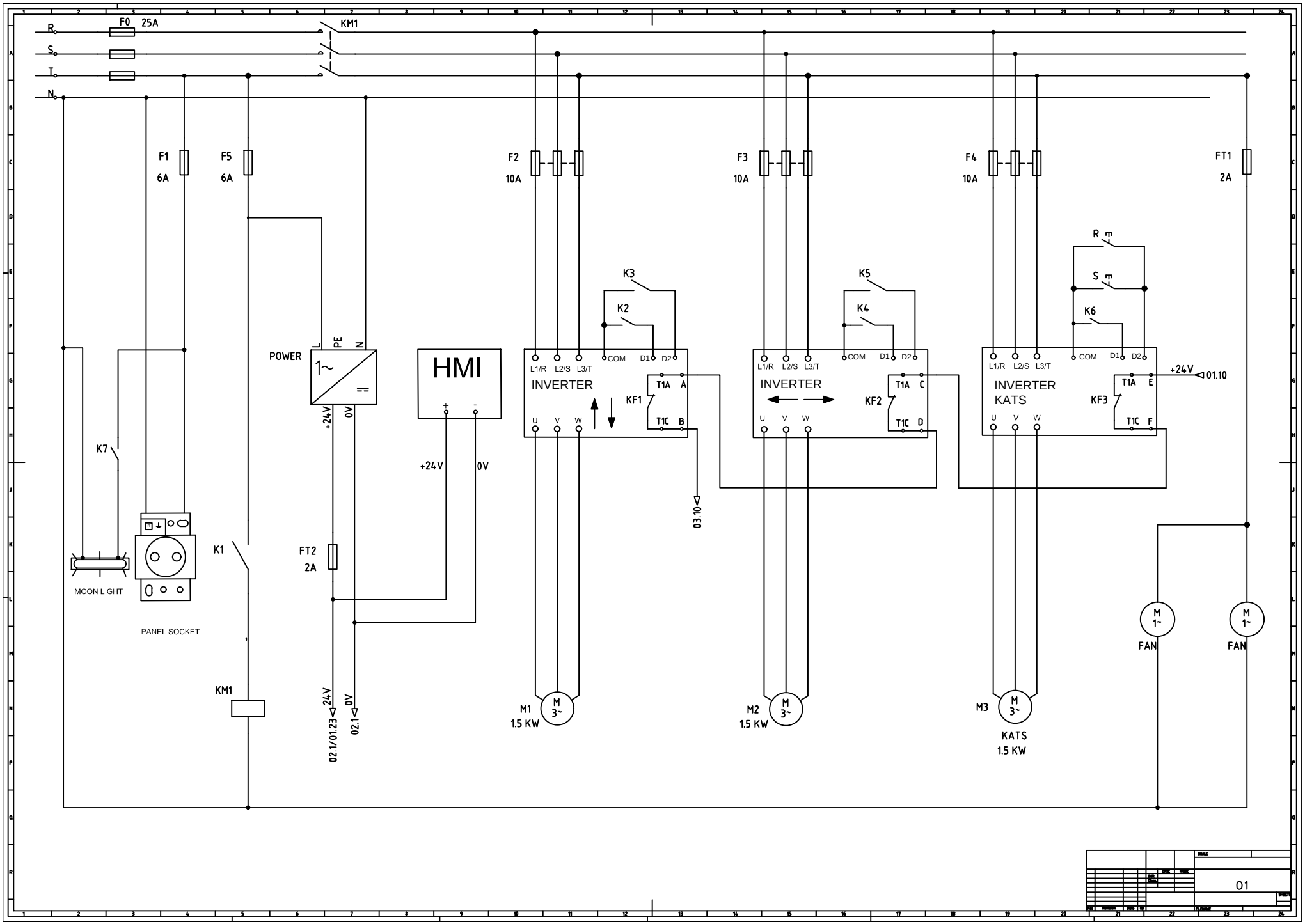
R
S
T
N
F0 25A
KM1
F1 6A
F5 6A
F2 10A
F3 10A
F4 10A
FT1 2A
POWER
L PE N
1~
=
+24V
0V
HMI
+ -
+24V
0V
K7
MOON LIGHT
PANEL SOCKET
K1
KM1
FT2 2A
24V
02.1/01.23
0V
02.1
K3
K2
K5
K4
K6
R
S
L1/R L2/S L3/T
COM D1 D2
INVERTER
T1A A
T1C B
KF1
U V W
03.10
INVERTER
T1A C
T1C D
KF2
INVERTER KATS
T1A E
T1C F
KF3
+24V
01.10
M1 1.5 KW
M2 1.5 KW
M3 KATS 1.5 KW
M 3~
M 1~
FAN
FAN
01

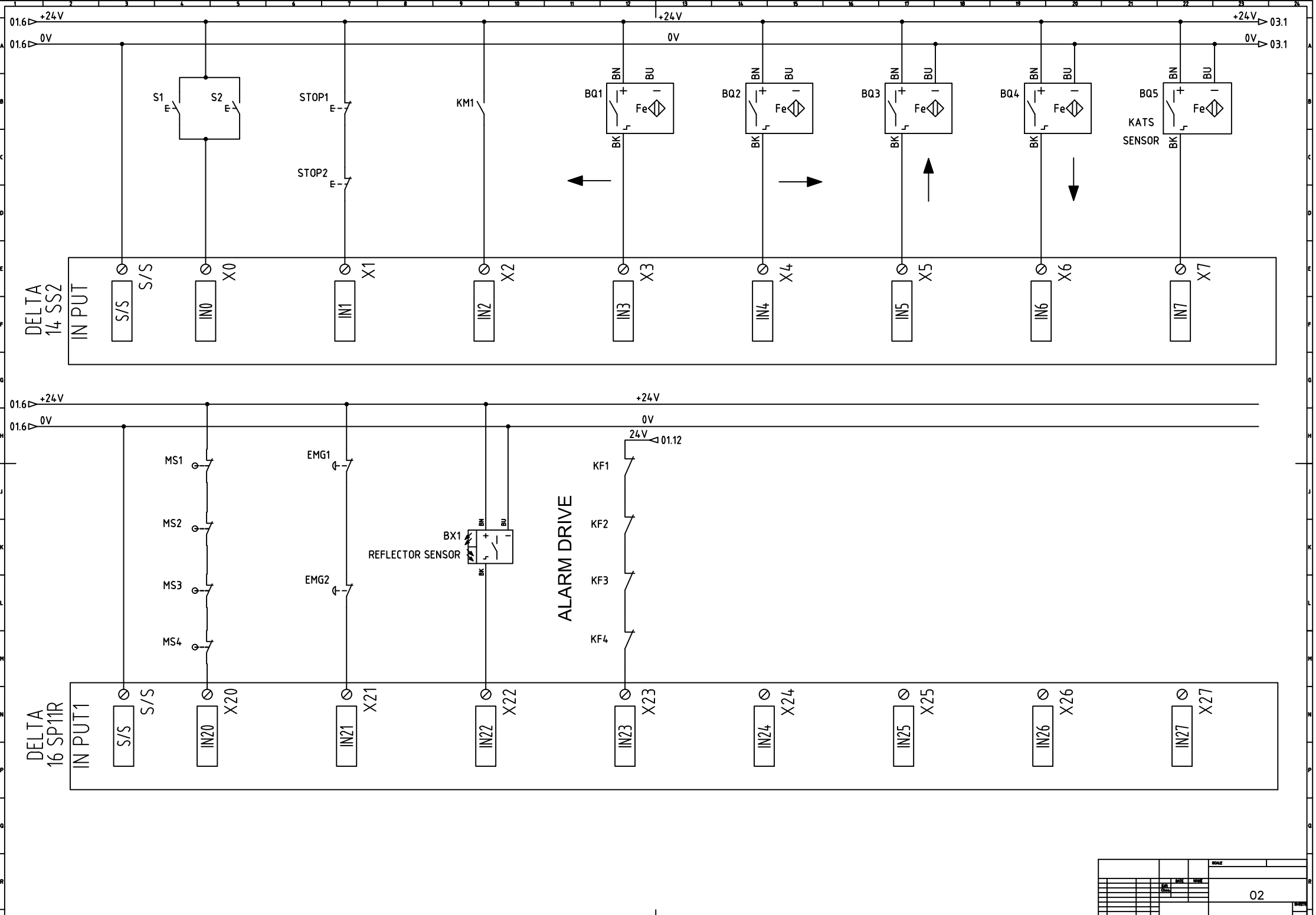
01.6 +24V
01.6 0V
+24V
0V
+24V 03.1
0V 03.1
S1
S2
E
STOP1
STOP2
KM1
BQ1
BQ2
BQ3
BQ4
BQ5
BN
BU
BK
Fe
KATS
SENSOR
DELTA
14 SS2
IN PUT
S/S
IN0
IN1
IN2
IN3
IN4
IN5
IN6
IN7
X0
X1
X2
X3
X4
X5
X6
X7
24V 01.12
MS1
MS2
MS3
MS4
EMG1
EMG2
BX1
REFLECTOR SENSOR
ALARM DRIVE
KF1
KF2
KF3
KF4
DELTA
16 SP11R
IN PUT1
IN20
IN21
IN22
IN23
IN24
IN25
IN26
IN27
X20
X21
X22
X23
X24
X25
X26
X27
02

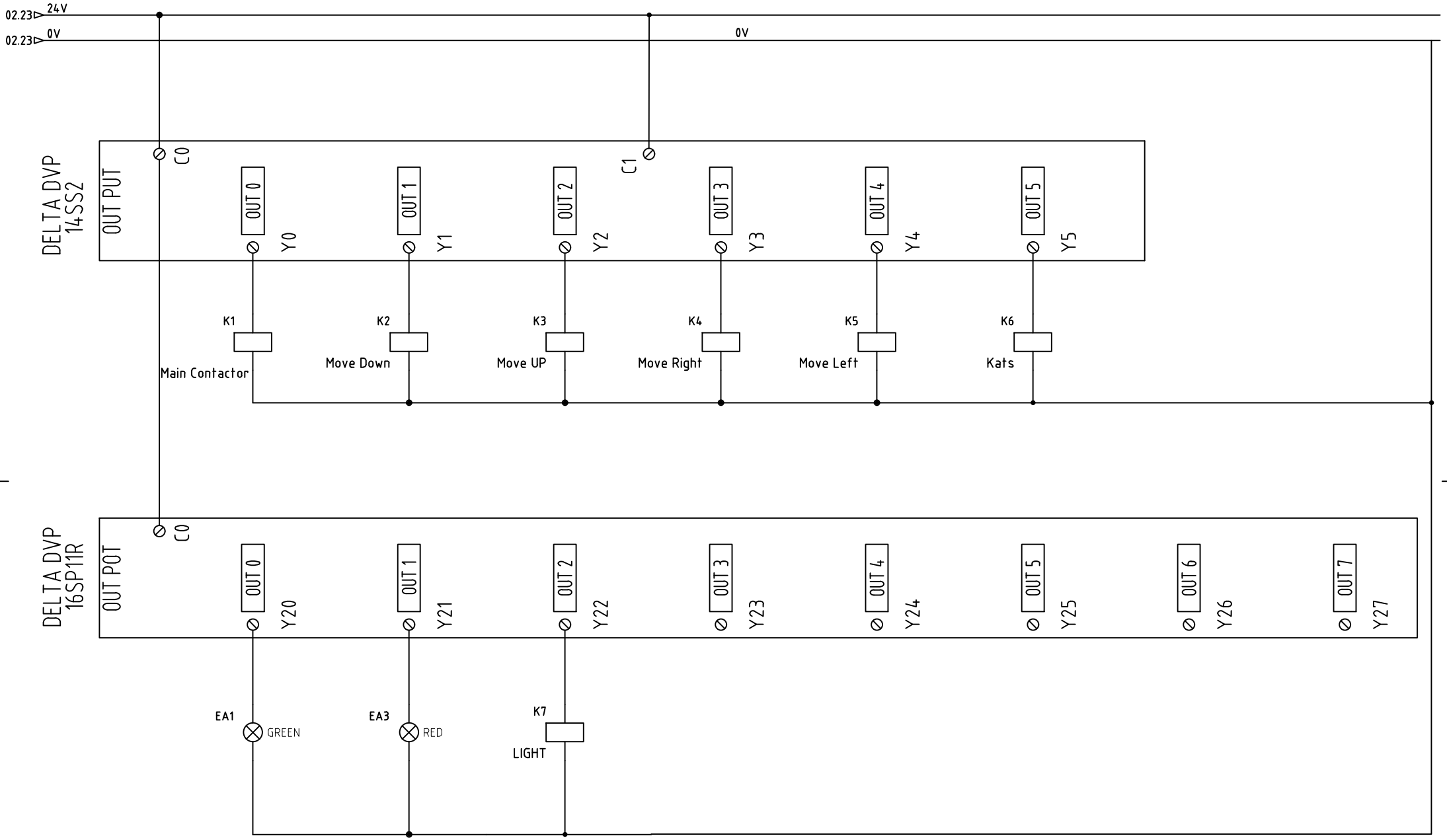
02.23
24V
02.23
0V
0V
DELTA DVP
14SS2
OUT PUT
C0
C1
OUT 0
OUT 1
OUT 2
OUT 3
OUT 4
OUT 5
Y0
Y1
Y2
Y3
Y4
Y5
K1
K2
K3
K4
K5
K6
Main Contactor
Move Down
Move UP
Move Right
Move Left
Kats
DELTA DVP
16SP11R
OUT POT
C0
OUT 0
OUT 1
OUT 2
OUT 3
OUT 4
OUT 5
OUT 6
OUT 7
Y20
Y21
Y22
Y23
Y24
Y25
Y26
Y27
EA1
GREEN
EA3
RED
K7
LIGHT

03