SHARING IS CARING

Writing for the Web

https://aka.ms/sharing-is-caring

Microsoft

PnP TEAM

Your Sharing is Caring Team

APRIL DUNNAM

Microsoft
@aprildunnam

DAVID WARNER

Catapult Systems
@davidwarnerii

EMILY MANICINI

Sympraxis Consulting
@eemancini

HUGO BERNIER

Microsoft
@bernierh

LUISE FREESE

M365 princess
@luisefreese

Sharing is Caring sessions

- **First Time Contributor**
- **Community Docs**
- **Maturity Model Practitioners**
- First Time Presenter
- Power Platform Samples Contributor
- PnP SPFx Workstation Setup
- PnP SPFx with NVM
- More than Code with VS Code

Sign up: https://pnp.github.io/sharing-is-caring/

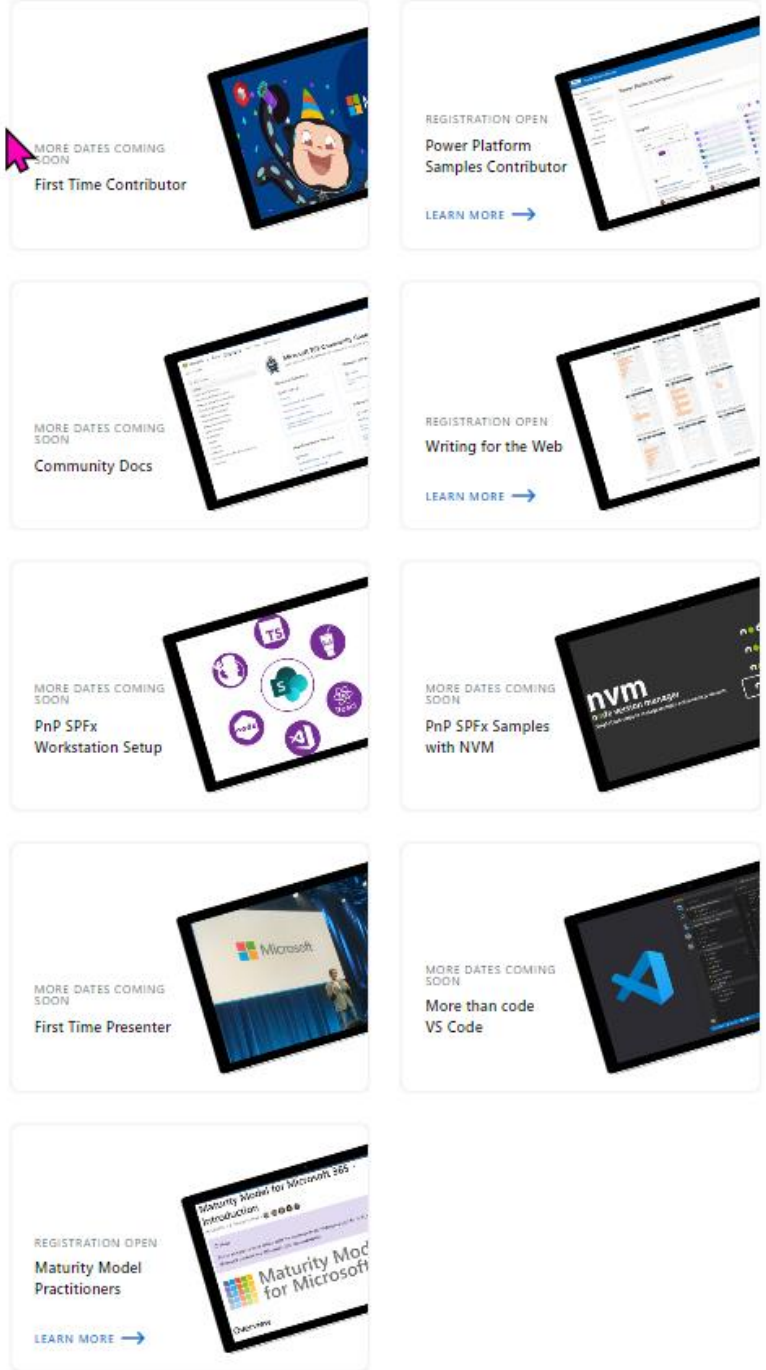

WHO

Agenda

- Online reading patterns
- Defining your audience & goals
- Designing for scannability
- Designing destination pages

Agenda

- **Online reading patterns**
- Defining your audience & goals
- Designing for scannability
- Designing destination pages

E

BILLY

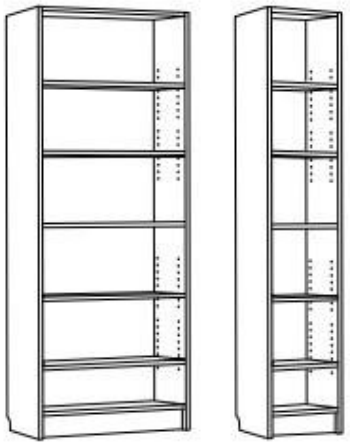

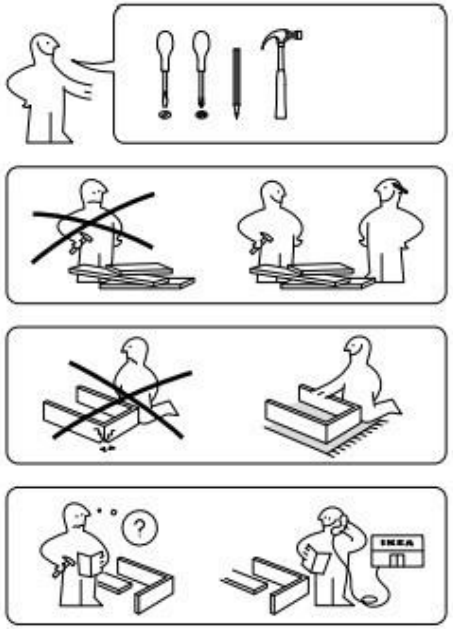

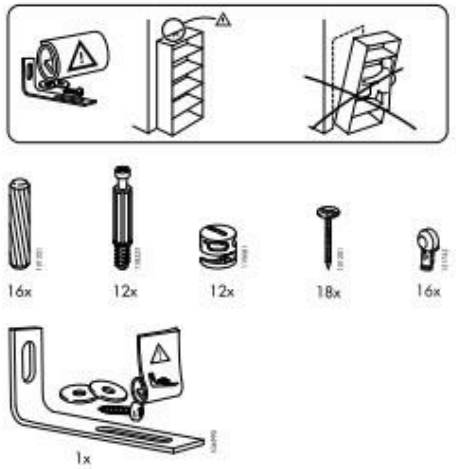

1

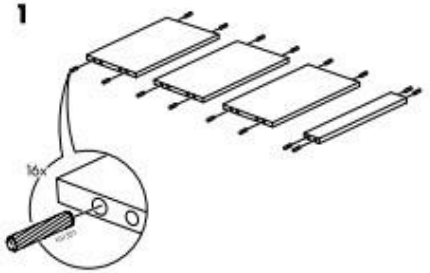

2

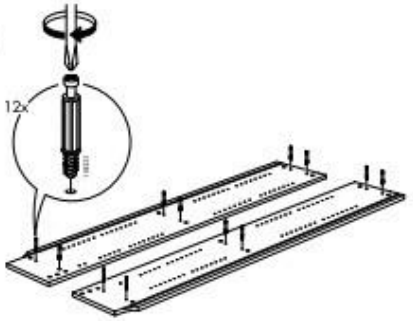

3

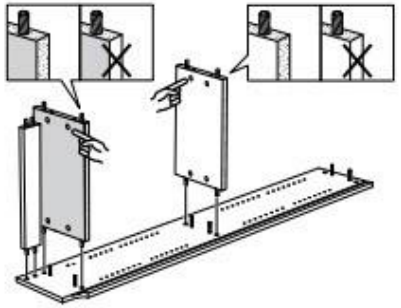

4

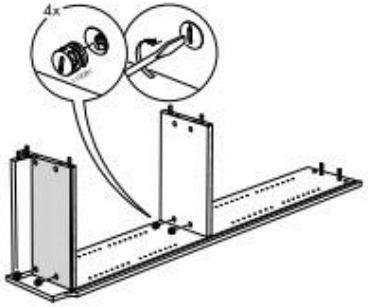

5

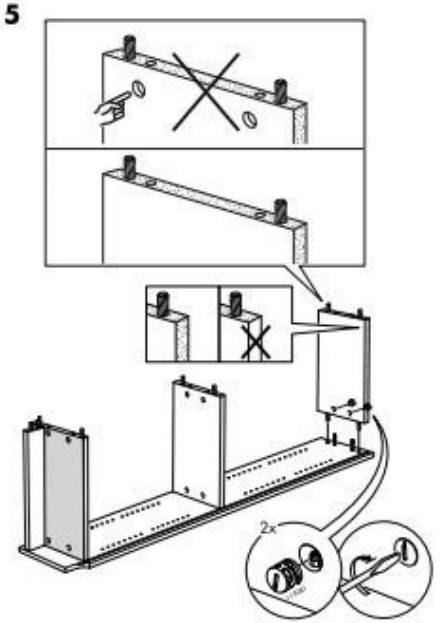

6

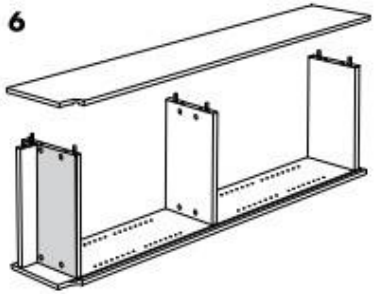

7

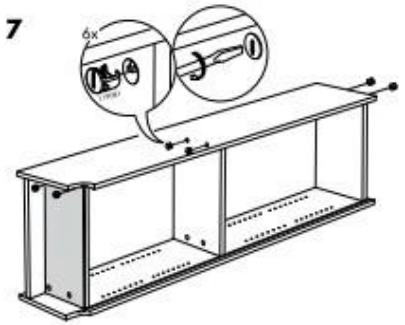

8

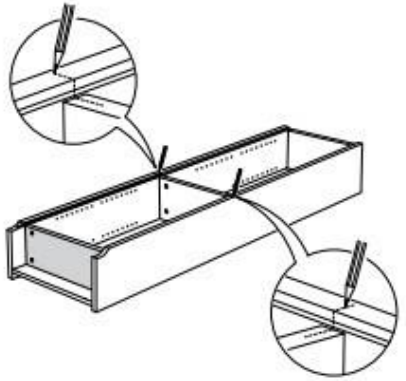

9

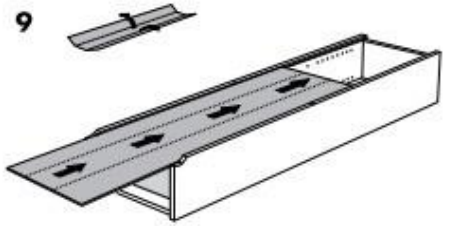

E

Satisficing:

People look until they find an answer that’s adequate for the information need

E

Information Scent:

Signal that tells the user how likely it is to contain the information they need

E

ANIMAL FORAGING		INFORMATION FORAGING
Food	**Goal**	Information
A site containing one or more potential sources of food	**Patch**	A website (or other source of information)
Search for food	**Forage**	Search for information
The animal's assessment of how likely it is that a given patch will provide food	**Scent**	How promising a potential source of information appears to the user
The totality of food types that an animal may consider in order to satisfy hunger	**Diet**	The totality of the information sources that a user may consider in order to satisfy an information need

Rate of gain = Information value / Cost associated with obtaining that information

E

Budiu, Raluca. "Information Foraging: A Theory of How People Navigate on the Web" Nielsen Norman Group, 2019, www.nngroup.com/articles/information-foraging

People scan while reading on the web

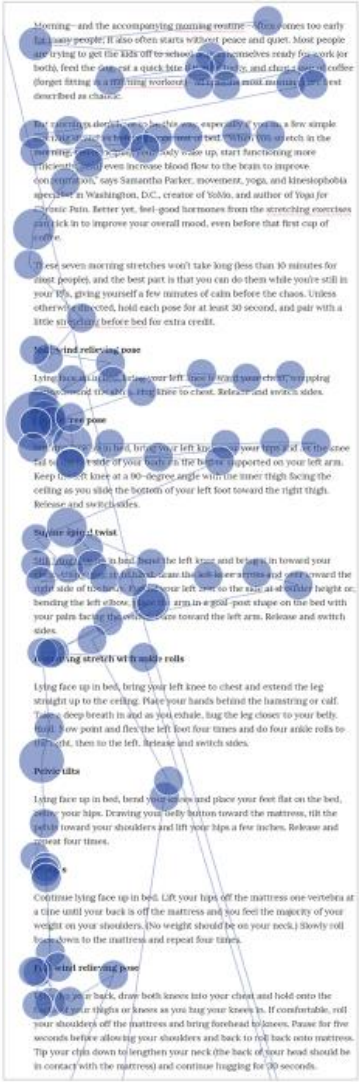

Gaze plot

Heat map

E

Our will to spend time searching depends on:

- Level of motivation
- Type of task
- Level of focus
- Personal characteristics

E

Agenda

- Online reading patterns
- **Defining your audience & goals**
- Designing for scannability
- Designing destination pages

Step 1: Define audience & goals

- Who will read it?
- What impact do you want to have on the reader?
- What are the reader's goals?
- How will you measure success?

H

To communicate:

To convey a message
resulting in
a change in behavior

H

To communicate:

To convey a message
resulting in
a change in behavior

H

Agenda

- Online reading patterns
- Defining your audience & goals
- **Designing for scannability**
- Designing destination pages

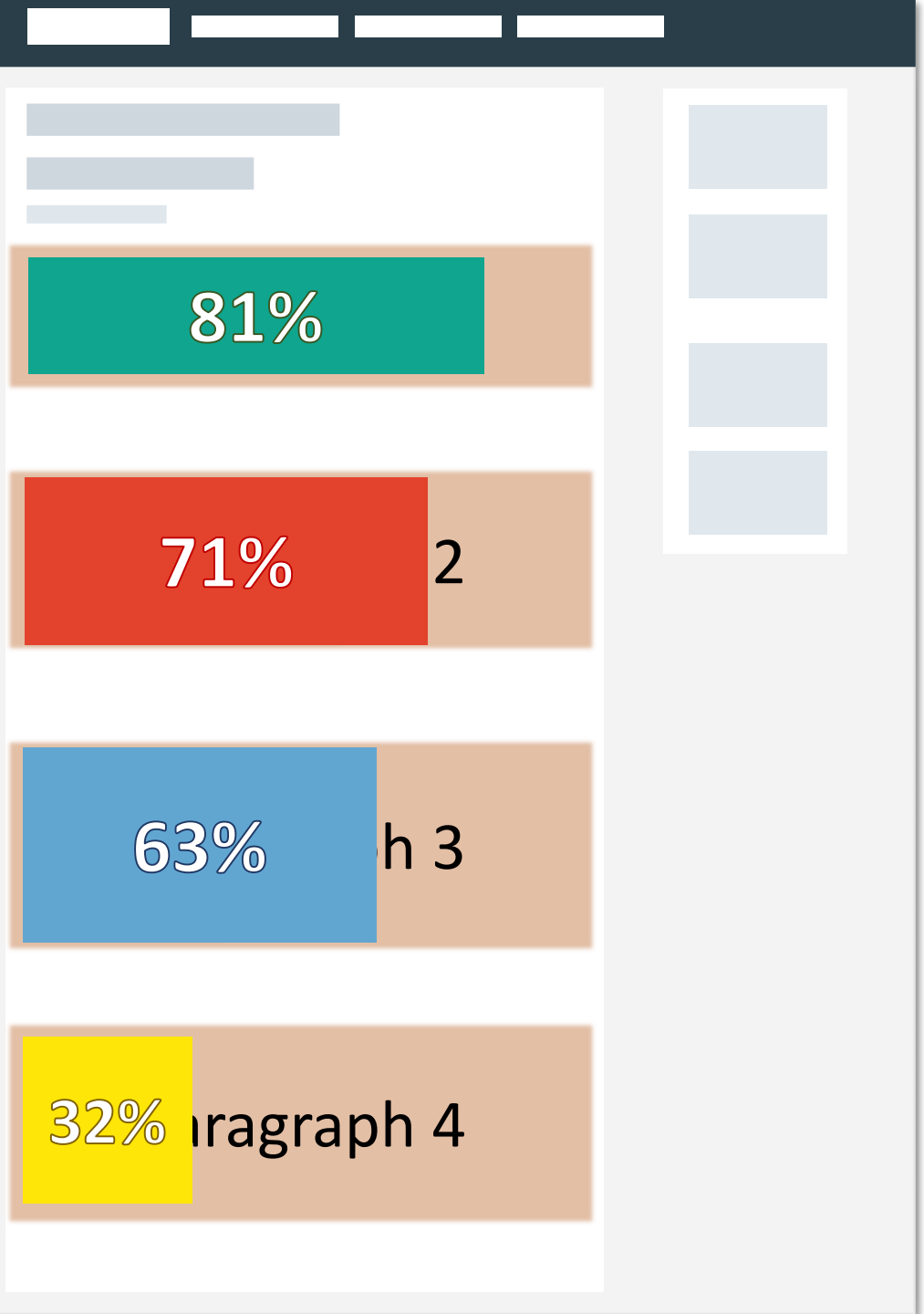
81%
71%
2
63%
h 3
32%
ıragraph 4

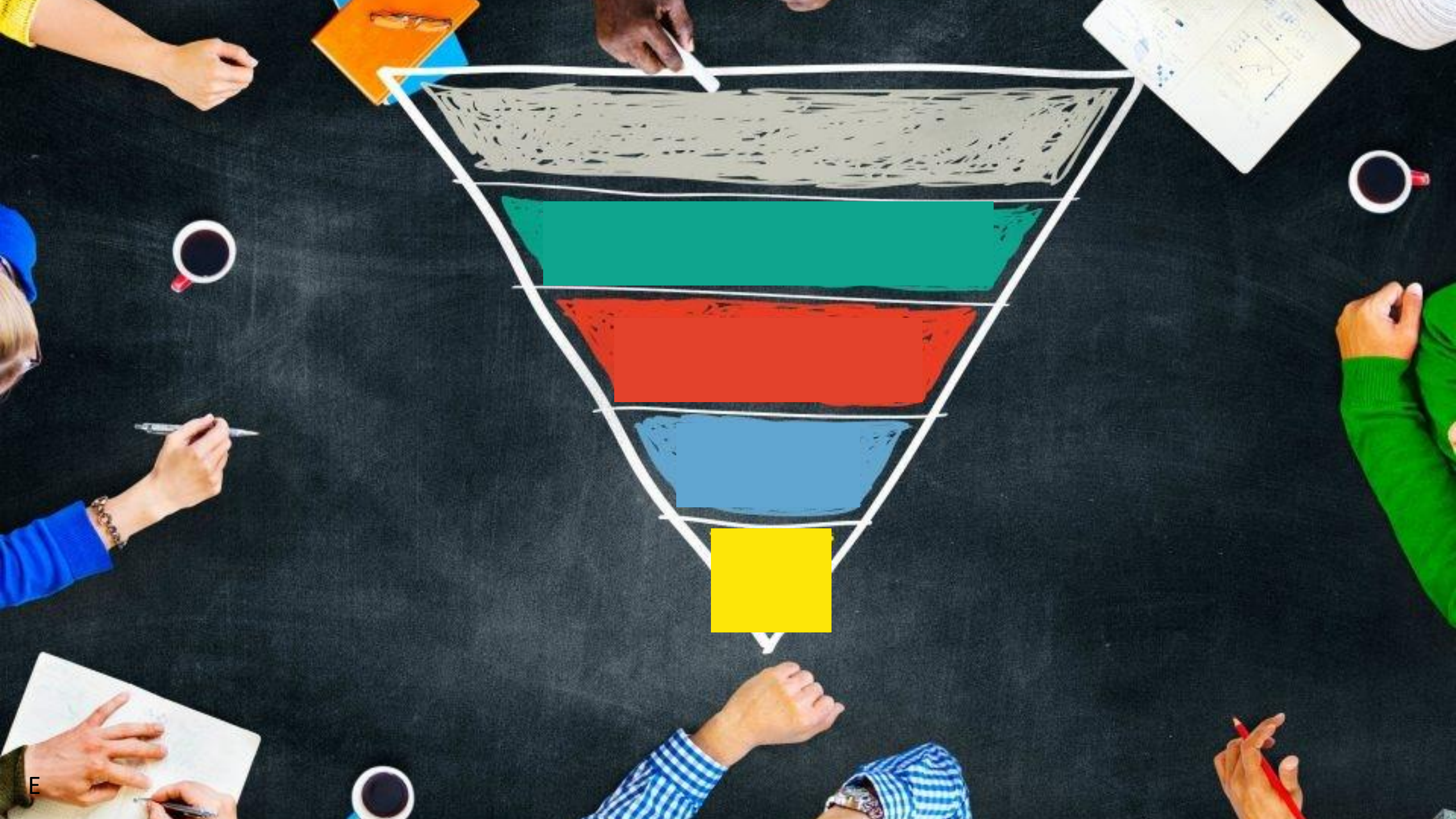

E

Schade, Amy. “Inverted Pyramid: Writing for Comprehension.” *Nielsen Norman Group*, 2018, www.nngroup.com/articles/inverted-pyramid

E

E

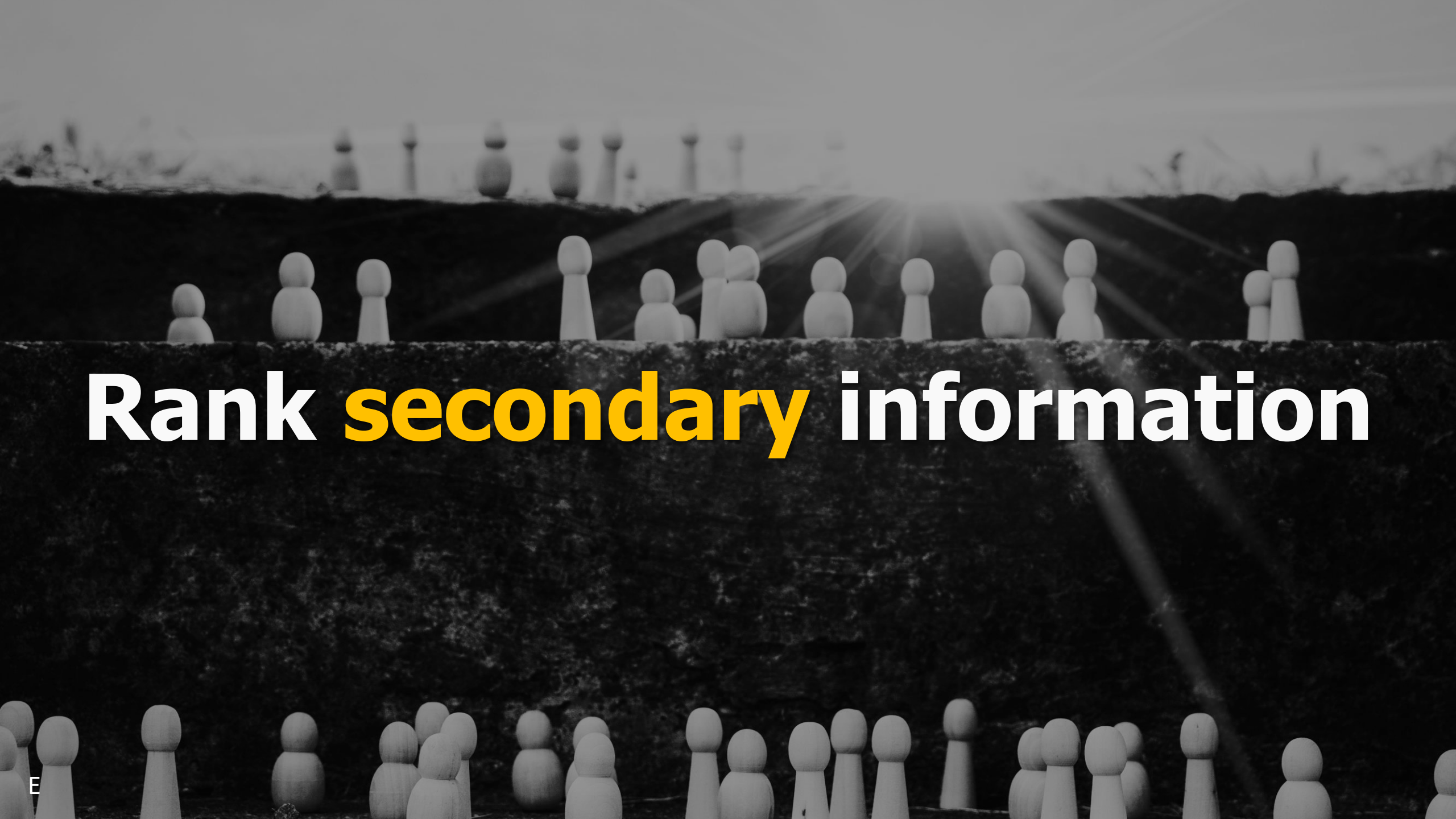

E

E

Frontload all elements

E

Consider adding a summary

E

Write for Scannability

H

Visual hierarchy, according to Gestalt psychology, is a pattern in the visual field wherein some elements tend to "stand out" or attract attention, more strongly than other elements

H

Welcome to the blog about using frequently asked question to create a good user experience! Frequently Asked Questions can be a great solution if you find yourself answering the same questions over email and phone repeatedly. This much needed information would be accessible through self-service if it was added to your intranet opening up more of your time for other important tasks.

The first recommendation is to look at your current information architecture and add the answers to those questions in context. This reduces the numbers of places someone would need to look to find the information they are seeking and thus reduces the mental currency someone is spending on your site navigating to content. You can also use FAQ for clues where there might be issues in finding content in your current information architecture or challenges in the business process they are trying to complete.

If you have FAQs that don't fit into your current IA, you might consider making a FAQ list. Keep these tips in mind:

Do not make up questions that are not being asked. This was listed as #7 in Nielsen Norman Group's Top 10 Web Design Mistakes of 2002. As they warn, "Infrequently asked questions undermine users' trust in the website and damage their understanding of its navigation." Your FAQ list should come from emails, live questions, help desk tickets, etc. You may need to make them more generic, so they answer questions for a larger audience.

Group your FAQs by topic. It can be incredibly cumbersome to scan these lists of questions and sorting the question in alphabetical order has no known meaning to the end user. If you group by topic alphabetically, the end user can use that information architecture to quickly drill down to the area they are seeking help. As you expand these topics, you may find you have enough FAQs to create a new SharePoint page and link it to your existing information architecture. FAQ pages should not be where information goes to die. It is where new information may be starting its journey on your intranet.

This might be a good opportunity to use SharePoint collapsible sections with your topic titles. As of December 2021 searching on the page with Control + F will not show results in the collapsed sections so this may be reason enough to avoid collapsible sections at this time. The text in those sections will appear in search. Explore my post on Using Collapsible Sections with User Experience in Mind to learn more.

Create a strong visual hierarchy. You want your topics to be the highest visual weight on the page followed by the questions. You might consider using a bold header for the topics, then a smaller header font for the questions. Nielsen Norman Group recommends printing the FAQ page then squinting at it from 10 feet away as a quick test to decide if the headings are big enough to locate quickly.

Avoid multicolumn layouts for questions. This goes against the natural reading pattern of the F-shaped reading pattern (where end users scan titles and continue down the page).

Direct end users to related content. Your FAQ might be the first of many subsequent questions. Anticipate the end users' needs and link them to additional helpful information. Remember to use the 4S for better link labels and keep these links: Specific- What they will find, not just "learn more." Sincere- Uou link to specific information, not a homepage that would require further navigation to access the mentioned content. Substantial- The link can standalone without additional text. Remember

H

10 Tips for Creating a Good User Experience with FAQs

Welcome to the blog about using frequently asked question to create a good user experience! Frequently Asked Questions can be a great solution if you find yourself answering the same questions over email and phone repeatedly. This much needed information would be accessible through self-service if it was added to your intranet opening up more of your time for other important tasks.

The first recommendation is to look at your current information architecture and add the answers to those questions in context. This reduces the numbers of places someone would need to look to find the information they are seeking and thus reduces the mental currency someone is spending on your site navigating to content. You can also use FAQ for clues where there might be issues in finding content in your current information architecture or challenges in the business process they are trying to complete.

If you have FAQs that don't fit into your current IA, you might consider making a FAQ list. Keep these tips in mind:

Do not make up questions that are not being asked.

This was listed as #7 in Nielsen Norman Group's Top 10 Web Design Mistakes of 2002. As they warn, "Infrequently asked questions undermine users' trust in the website and damage their understanding of its navigation." Your FAQ list should come from emails, live questions, help desk tickets, etc. You may need to make them more generic, so they answer questions for a larger audience.

Group your FAQs by topic.

It can be incredibly cumbersome to scan these lists of questions and sorting the question in alphabetical order has no known meaning to the end user. If you group by topic alphabetically, the end user can use that information architecture to quickly drill down to the area they are seeking help. As you expand these topics, you may find you have enough FAQs to create a new SharePoint page and link it to your existing information architecture. FAQ pages should not be where information goes to die. It is where new information may be starting its journey on your intranet.

This might be a good opportunity to use SharePoint collapsible sections with your topic titles. As of December 2021 searching on the page with Control + F will not show results in the collapsed sections so this may be reason enough to avoid collapsible sections at this time. The text in those sections will appear in search. Explore my post on Using Collapsible Sections with User Experience in Mind to learn more.

Create a strong visual hierarchy.

You want your topics to be the highest visual weight on the page followed by the questions. You might consider using a bold header for the topics, then a smaller header font for the questions. Nielsen Norman Group recommends printing the FAQ page then squinting at it from 10 feet away as a quick test to decide if the headings are big enough to locate quickly.

Avoid multicolumn layouts for questions.

This goes against the natural reading pattern of the F-shaped reading pattern (where end users scan titles and continue down the page).

H

Use clear headings and sub-headings

H

Using Collapsible Sections

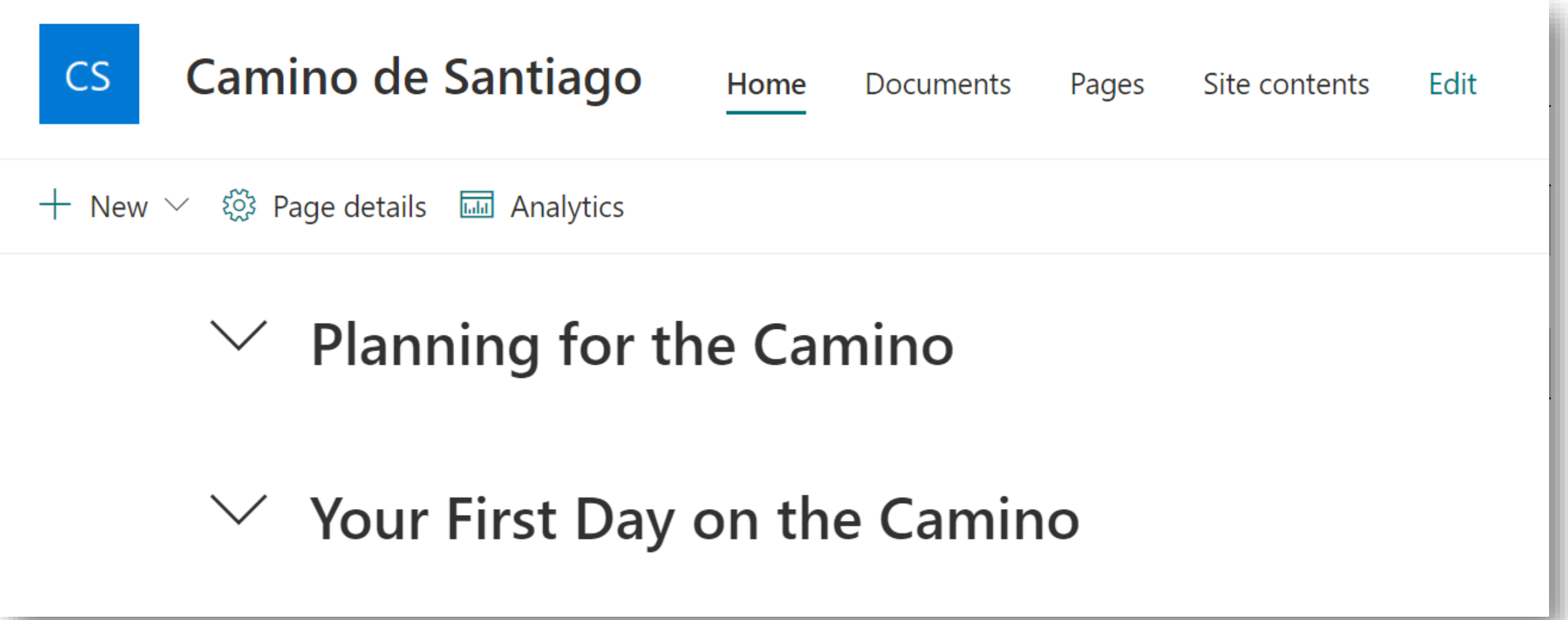

E

Using Collapsible Sections with User Experience in Mind: https://emilymancini.com/2021/11/17/using-collapsible-sections-with-user-experience-in-mind/
Accordions Are Not Always the Answer for Complex Content on Desktops: https://www.nngroup.com/articles/accordions-complex-content/

Disneyland's Reopening: What You Need To Know

Emily Mandzio

After being closed for more than a year, Disneyland in Anaheim, Calif., reopened on Friday to residents of the state only. Travel advisers around the country said tickets and reservations sold out quickly, and people have been waiting online for hours to get a reservation.

Though Disney has not said when non-California residents will be allowed in, that doesn't keep people from hoping.

"I have a file filled with families waiting for Disneyland to open up to non-California residents," said Staci Kimball, a senior adviser with Glass Slipper Concierge, a travel agency that specializes in luxury Disney trips. "They know they can go to Walt Disney World, but there's so much nostalgia for the original park."

Walt Disney World, the entertainment company's Orlando, Fla., park has been open since July.

As more people across the United States are vaccinated and as summer approaches, park bookings are picking up, despite the fact that children are still not eligible for the coronavirus vaccines.

"Things were slow for some time," said Greg Antonelle, the chief executive of Mickey Travels, a travel agency that helps plan Disney trips. "People are tired of being cooped up, not going on vacation. The fact that so many people have gotten the vaccine helps and that we can clearly say there have been no outbreaks in a park also helps."

Disney would not comment on how many cases of Covid-19 had been linked to park visitors, but no large outbreaks have been reported.

Mr. Antonelle said that his company, which exclusively books Disney trips — 10,000 of them in a typical year — had more business in March than ever before (the company had its strongest year of business in 2019) and he anticipates that if bookings keep coming at the pace they've been at so far, this will be the company's strongest year, a sentiment echoed by other advisers.

Ahead of the Disneyland reopening, we talked to travel advisers and park visitors about what to expect at the Disney parks right now.

It takes three steps to get in

Walt Disney World is limiting entry at 35 percent of its normal capacity. Disney has not said whether it will increase capacity anytime soon, but Christine McCarthy, senior executive vice president and chief financial officer for the Walt Disney Company said during an earnings call in February that when the Orlando park started opening it was "at a level less than 35 percent."

At Disneyland, the company is going beyond the state guidelines, which would allow it to admit out-of-state visitors who have been vaccinated, and limiting visitors to California residents. Groups cannot be larger than three households and park capacity is capped at 25 percent. The company has not said when it might ease those restrictions and would not comment on its plans generally.

One way capacity is being kept in check is by requiring people to make a park pass reservation as well as to buy a ticket in order to enter its four Orlando parks — Epcot, Animal Kingdom, Hollywood Studios and the Magic Kingdom. Disneyland will be using the same system for people to enter its two parks: Disneyland Park and Disney California Adventure Park. Guests who are 3 years old and over need a park reservation and ticket for the same park on the same date.

Here's the three step process to get both: First, check Disney's theme park availability calendar in order to confirm that the park you want to visit is available for the date you want. Second, purchase park tickets and log into a My Disney Experience account. Third, make a park pass reservation. The system will only allow you to make a reservation if you have a ticket.

Ms. Kimball suggests checking park reservation availability before booking a flight to Orlando, so you don't end up with a flight and no way of getting into a park.

"You're not just buying tickets," Ms. Kimball said. "You need both a park reservation and a ticket and they have to be linked in the My Disney Experience website or app. If you don't have both, you can't get in."

On social media, people have said that they were not able to get into parks because they had one of the two entry requirements — a ticket or a reservation, but not both.

Bethany Miller, an administrator at a medical school in St. Louis who visited the Orlando park in mid-April, said that she thought Disney did a good a job throughout the booking process on its website of reminding people that they needed the reservation and a ticket.

You'll need to follow the rules

Ms. Miller, 42, has been to Disney World eight times and said that she felt just as safe in the park this year as she had in previous years, if not safer. She chose to go on a solo trip to the Florida park, leaving her husband and son at home, because she knew she could feel confident there.

"I wanted a place that was magical and storybookish," she said. "I didn't want to think about the world. This was my trip. It was for me to ride the roller coasters as much as I want and if I wanted to sit there for six hours and stare at the castle I could, because I knew Disney would worry about Covid for me."

In addition to placing hand sanitizing stations around the around the park and urging guests to social distance, Disney requires everyone, including people who have been vaccinated, to wear masks at all times, except when swimming or eating.

And forget about strolling while eating: "You may temporarily remove your face covering while actively eating, drinking or taking an outdoor photo, but you must be stationary and maintain appropriate physical distancing during this time," the Disney website says.

When Mishal Hafeez, 27, visited Disney World from Houston in January, she was struck by how seriously protocols were being followed.

"We were nervous at first because we weren't sure how Disney was going to be handling precautions," she said. "But everything was good. People were masked, if not double masked. Castmates were doing a wonderful job keeping everyone in check."

Ms. Hafeez said that at one point there was a family without masks standing behind her in a line waiting for a ride. Before she could say anything, a castmate asked the family members to put on their masks. She also described hearing several announcements reminding people to social distance and wear masks.

"Disney's staff did everything in their power to make you feel like you were having a safe Covid experience and I trusted that more than I trust other places," said Ms. Miller, the solo visitor. "There are mask mandates in other places, but they aren't enforced like they are at Disney."

Lines are shorter, experiences have limits

For repeat guests, one of the biggest differences in the parks might be the lack of fast passes, which let holders jump the lines on chosen rides. Everyone has to wait for rides, unless they have a VIP booking through a travel adviser, but with capacity at 35 percent, lines are moving faster than on a normal prepandemic day, visitors said.

"This trip had the shortest lines I've ever experienced in my life," said Anum Syed, a paralegal who lives in Texas and visited Disney World in late January. "The longest was 25 minutes and everything was 15 minutes or less."

Mr. Antonelle, of Mickey Travels, who lives 10 minutes away from the Magic Kingdom and said he has been to the park more than 100 times since it reopened in July, said that he has noticed lines getting longer since July, but they are still shorter than before the pandemic. (Mr. Antonelle has an annual pass).

Ms. Syed and Mr. Antonelle both said that rides were equipped with plexiglass dividers, and that depending on the ride visitors might be placed in every other car, or that parties would not be mixed within a car (each group would get its own teacup, for example). There were plenty of signs encouraging social distancing. They and others said that they felt safer in the park than in grocery stores.

"It felt like being in a bubble," Ms. Syed said.

The parades, fireworks, and nighttime spectaculars that are typical of the Disney park experience are still suspended. Instead of parades that typically draw big crowds of people who line up and sit on the curb, guests who recently visited Orlando parks said there were smaller performances throughout the day. Character interactions are allowed, but have to be socially distanced.

"You can dine inside Cinderella Castle, but guests can't hug characters," Ms. Kimball said. "The characters appear and they can still be in the background. It's still magical and immersive but fits the climate of today's culture."

There's still no sign of 'Disney Genie'

One of the anticipated introductions at the parks has been a scheduling app called Disney Genie, which the company announced in 2019. The app would help people plan their trips and guide them through parks in an efficient way. The app is intended to assist guests in efficiently navigating the parks' rides and activities, a highly in-demand skill, especially for first-time park visitors.

The app is meant to feel like a personal planner helping game out the trip and make the in-park experience more seamless (a goal that has created an entire industry of Disney-specialist travel advisers). The chairman of Disney Parks, Experiences and Products Josh D'Amaro said in April that the company is still working on the app, and no date has been set for its launch.

Like Comment 2 Views Save for later
Comments
Add a comment. Type @ to mention someone
Post

H

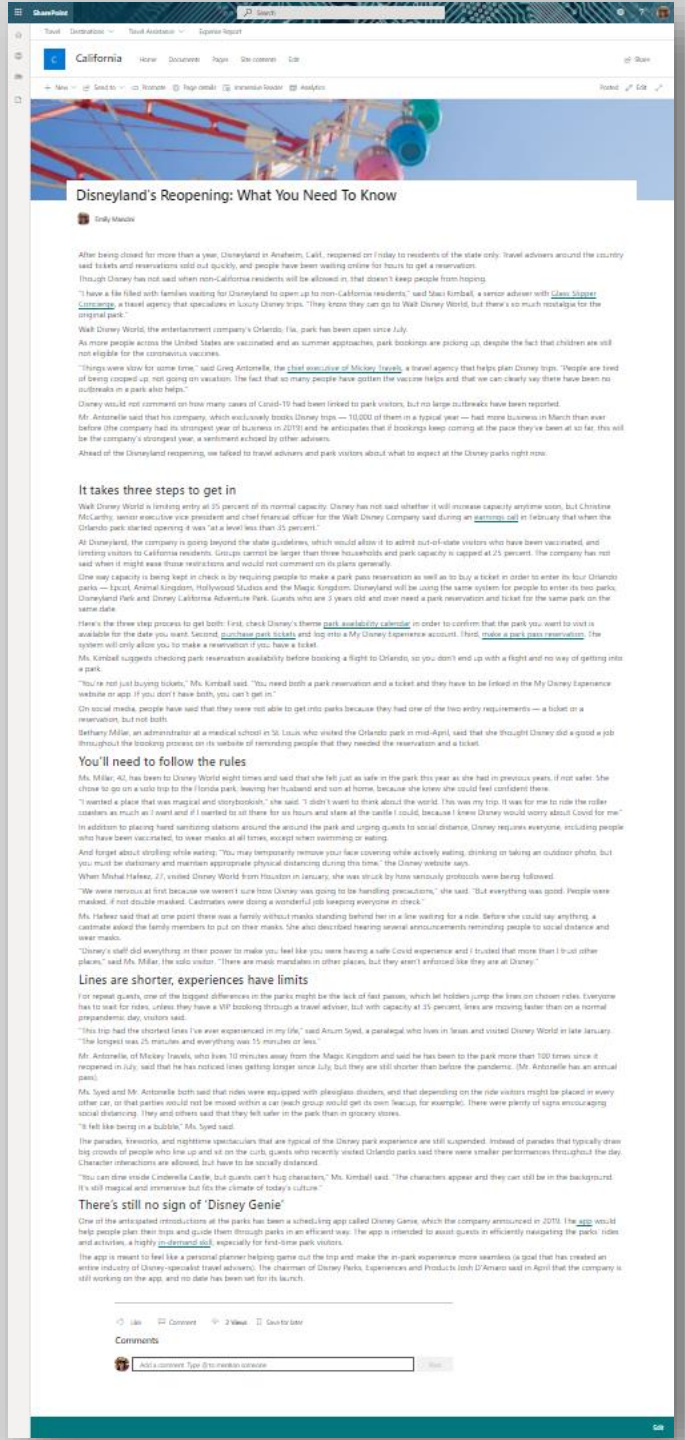

California

Disneyland's Reopening: What You Need To Know

Emily Mandzio

After being closed for more than a year, Disneyland in Anaheim, Calif., reopened on Friday to residents of the state only. Travel advisers around the country said tickets and reservations sold out quickly, and people have been waiting online for hours to get a reservation.

Though Disney has not said when non-California residents will be allowed in, that doesn't keep people from hoping.

"I have a file filled with families waiting for Disneyland to open up to non-California residents," said Staci Kimball, a senior adviser with Glass Slipper Concierge, a travel agency that specializes in luxury Disney trips. "They know they can go to Walt Disney World, but there's so much nostalgia for the original park."

Walt Disney World, the entertainment company's Orlando, Fla., park has been open since July.

As more people across the United States are vaccinated and as summer approaches, park bookings are picking up, despite the fact that children are still not eligible for the coronavirus vaccines.

"Things were slow for some time," said Greg Antonelle, the chief executive of Mickey Travels, a travel agency that helps plan Disney trips. "People are tired of being cooped up, not going on vacation. The fact that so many people have gotten the vaccine helps and that we can clearly say there have been no outbreaks in a park also helps."

Disney would not comment on how many cases of Covid-19 had been linked to park visitors, but no large outbreaks have been reported.

Mr. Antonelle said that his company, which exclusively books Disney trips — 10,000 of them in a typical year — had more business in March than ever before (the company had its strongest year of business in 2019) and he anticipates that if bookings keep coming at the pace they've been at so far, this will be the company's strongest year, a sentiment echoed by other advisers.

Ahead of the Disneyland reopening, we talked to travel advisers and park visitors about what to expect at the Disney parks right now.

It takes three steps to get in

Walt Disney World is limiting entry at 35 percent of its normal capacity. Disney has not said whether it will increase capacity anytime soon, but Christine McCarthy, senior executive vice president and chief financial officer for the Walt Disney Company said during an earnings call in February that when the Orlando park started opening it was "at a level less than 35 percent."

At Disneyland, the company is going beyond the state guidelines, which would allow it to admit out-of-state visitors who have been vaccinated, and limiting visitors to California residents. Groups cannot be larger than three households and park capacity is capped at 25 percent. The company has not said when it might ease those restrictions and would not comment on its plans generally.

One way capacity is being kept in check is by requiring people to make a park pass reservation as well as to buy a ticket in order to enter its four Orlando parks — Epcot, Animal Kingdom, Hollywood Studios and the Magic Kingdom. Disneyland will be using the same system for people to enter its two parks, Disneyland Park and Disney California Adventure Park. Guests who are 3 years old and over need a park reservation and ticket for the same park on the same date.

Here's the three step process to get both: First, check Disney's theme park availability calendar in order to confirm that the park you want to visit is available for the date you want. Second, purchase park tickets and log into a My Disney Experience account. Third, make a park pass reservation. The system will only allow you to make a reservation if you have a ticket.

Ms. Kimball suggests checking park reservation availability before booking a flight to Orlando, so you don't end up with a flight and no way of getting into a park.

"You're not just buying tickets," Ms. Kimball said. "You need both a park reservation and a ticket and they have to be linked in the My Disney Experience website or app. If you don't have both, you can't get in."

On social media, people have said that they were not able to get into parks because they had one of the two entry requirements — a ticket or a reservation, but not both.

Bethany Miller, an administrator at a medical school in St. Louis who visited the Orlando park in mid-April, said that she thought Disney did a good a job throughout the booking process on its website of reminding people that they needed the reservation and a ticket.

You'll need to follow the rules

Ms. Miller, 42, has been to Disney World eight times and said that she felt just as safe in the park this year as she had in previous years, if not safer. She chose to go on a solo trip to the Florida park, leaving her husband and son at home, because she knew she could feel confident there.

"I wanted a place that was magical and storybookish," she said. "I didn't want to think about the world. This was my trip. It was for me to ride the roller coasters as much as I want and if I wanted to sit there for six hours and stare at the castle I could, because I knew Disney would worry about Covid for me."

In addition to placing hand sanitizing stations around the around the park and urging guests to social distance, Disney requires everyone, including people who have been vaccinated, to wear masks at all times, except when swimming or eating.

And forget about strolling while eating: "You may temporarily remove your face covering while actively eating, drinking or taking an outdoor photo, but you must be stationary and maintain appropriate physical distancing during this time," the Disney website says.

When Mishal Hafeez, 27, visited Disney World from Houston in January, she was struck by how seriously protocols were being followed.

"We were nervous at first because we weren't sure how Disney was going to be handling precautions," she said. "But everything was good. People were masked, if not double masked. Castmates were doing a wonderful job keeping everyone in check."

Ms. Hafeez said that at one point there was a family without masks standing behind her in a line waiting for a ride. Before she could say anything, a castmate asked the family members to put on their masks. She also described hearing several announcements reminding people to social distance and wear masks.

"Disney's staff did everything in their power to make you feel like you were having a safe Covid experience and I trusted that more than I trust other places," said Ms. Miller, the solo visitor. "There are mask mandates in other places, but they aren't enforced like they are at Disney."

Lines are shorter, experiences have limits

For repeat guests, one of the biggest differences in the parks might be the lack of fast passes, which let holders jump the lines on chosen rides. Everyone has to wait for rides, unless they have a VIP booking through a travel adviser, but with capacity at 35 percent, lines are moving faster than on a normal prepandemic day, visitors said.

"This trip had the shortest lines I've ever experienced in my life," said Anum Syed, a paralegal who lives in Texas and visited Disney World in late January. "The longest was 25 minutes and everything was 15 minutes or less."

Mr. Antonelle, of Mickey Travels, who lives 10 minutes away from the Magic Kingdom and said he has been to the park more than 100 times since it reopened in July, said that he has noticed lines getting longer since July, but they are still shorter than before the pandemic. (Mr. Antonelle has an annual pass).

Ms. Syed and Mr. Antonelle both said that rides were equipped with plexiglass dividers, and that depending on the ride visitors might be placed in every other car, so that parties would not be mixed with a car (each group would get its own teacup, for example). There were plenty of signs encouraging social distancing. They and others said that they felt safer in the park than in grocery stores.

"It felt like being in a bubble," Ms. Syed said.

The parades, fireworks, and nighttime spectaculars that are typical of the Disney park experience are still suspended. Instead of parades that typically draw big crowds of people who line up and sit on the curb, guests who recently visited Orlando parks said there were smaller performances throughout the day. Character interactions are allowed, but have to be socially distanced.

"You can dine inside Cinderella Castle, but guests can't hug characters," Ms. Kimball said. "The characters appear and they can still be in the background. It's still magical and immersive but fits the climate of today's culture."

There's still no sign of 'Disney Genie'

One of the anticipated introductions at the parks has been a scheduling app called Disney Genie, which the company announced in 2019. The app would help people plan their trips and guide them through parks in an efficient way. The app is intended to assist guests in efficiently navigating the parks' rides and activities, a highly in-demand skill, especially for first-time park visitors.

The app is meant to feel like a personal planner helping game out the trip and make the in-park experience more seamless (a goal that has created an entire industry of Disney-specialist travel advisers). The chairman of Disney Parks, Experiences and Products Josh D'Amaro said in April that the company is still working on the app, and no date has been set for its launch.

Comments

Add a comment. Type @ to mention someone

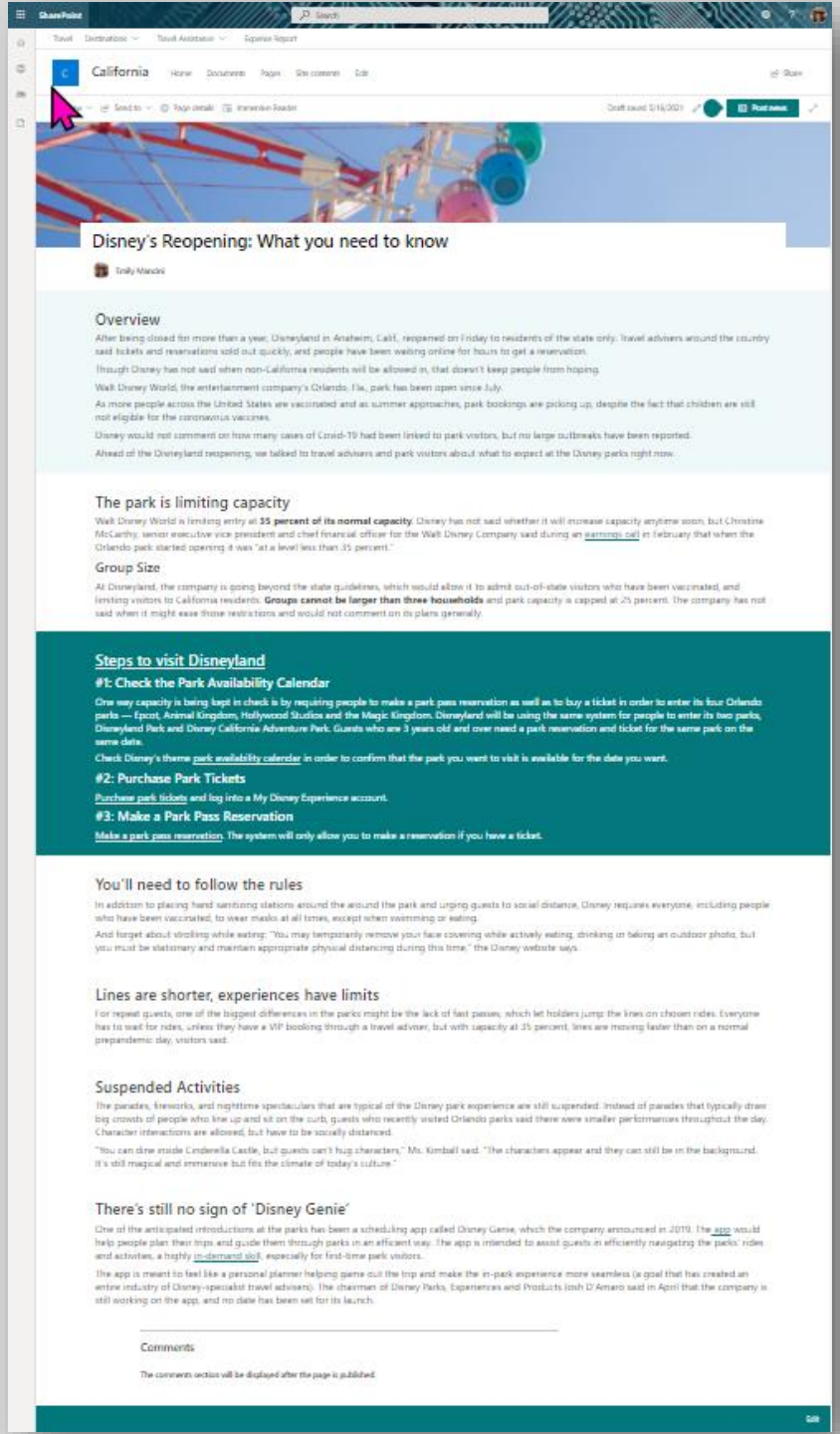

California

Disney's Reopening: What you need to know

Emily Mandzio

Overview

After being closed for more than a year, Disneyland in Anaheim, Calif., reopened on Friday to residents of the state only. Travel advisers around the country said tickets and reservations sold out quickly, and people have been waiting online for hours to get a reservation.

Though Disney has not said when non-California residents will be allowed in, that doesn't keep people from hoping.

Walt Disney World, the entertainment company's Orlando, Fla., park has been open since July.

As more people across the United States are vaccinated and as summer approaches, park bookings are picking up, despite the fact that children are still not eligible for the coronavirus vaccines.

Disney would not comment on how many cases of Covid-19 had been linked to park visitors, but no large outbreaks have been reported.

Ahead of the Disneyland reopening, we talked to travel advisers and park visitors about what to expect at the Disney parks right now.

The park is limiting capacity

Walt Disney World is limiting entry at **35 percent of its normal capacity**. Disney has not said whether it will increase capacity anytime soon, but Christine McCarthy, senior executive vice president and chief financial officer for the Walt Disney Company said during an earnings call in February that when the Orlando park started opening it was "at a level less than 35 percent."

Group Size

At Disneyland, the company is going beyond the state guidelines, which would allow it to admit out-of-state visitors who have been vaccinated, and limiting visitors to California residents. **Groups cannot be larger than three households** and park capacity is capped at 25 percent. The company has not said when it might ease those restrictions and would not comment on its plans generally.

Steps to visit Disneyland

#1: Check the Park Availability Calendar

One way capacity is being kept in check is by requiring people to make a park pass reservation as well as to buy a ticket in order to enter its four Orlando parks — Epcot, Animal Kingdom, Hollywood Studios and the Magic Kingdom. Disneyland will be using the same system for people to enter its two parks, Disneyland Park and Disney California Adventure Park. Guests who are 3 years old and over need a park reservation and ticket for the same park on the same date.

Check Disney's theme park availability calendar in order to confirm that the park you want to visit is available for the date you want.

#2: Purchase Park Tickets

Purchase park tickets and log into a My Disney Experience account.

#3: Make a Park Pass Reservation

Make a park pass reservation. The system will only allow you to make a reservation if you have a ticket.

You'll need to follow the rules

In addition to placing hand sanitizing stations around the around the park and urging guests to social distance, Disney requires everyone, including people who have been vaccinated, to wear masks at all times, except when swimming or eating.

And forget about strolling while eating: "You may temporarily remove your face covering while actively eating, drinking or taking an outdoor photo, but you must be stationary and maintain appropriate physical distancing during this time," the Disney website says.

Lines are shorter, experiences have limits

For repeat guests, one of the biggest differences in the parks might be the lack of fast passes, which let holders jump the lines on chosen rides. Everyone has to wait for rides, unless they have a VIP booking through a travel adviser, but with capacity at 35 percent, lines are moving faster than on a normal prepandemic day, visitors said.

Suspended Activities

The parades, fireworks, and nighttime spectaculars that are typical of the Disney park experience are still suspended. Instead of parades that typically draw big crowds of people who line up and sit on the curb, guests who recently visited Orlando parks said there were smaller performances throughout the day. Character interactions are allowed, but have to be socially distanced.

"You can dine inside Cinderella Castle, but guests can't hug characters," Ms. Kimball said. "The characters appear and they can still be in the background. It's still magical and immersive but fits the climate of today's culture."

There's still no sign of 'Disney Genie'

One of the anticipated introductions at the parks has been a scheduling app called Disney Genie, which the company announced in 2019. The app would help people plan their trips and guide them through parks in an efficient way. The app is intended to assist guests in efficiently navigating the parks' rides and activities, a highly in-demand skill, especially for first-time park visitors.

The app is meant to feel like a personal planner helping game out the trip and make the in-park experience more seamless (a goal that has created an entire industry of Disney-specialist travel advisers). The chairman of Disney Parks, Experiences and Products Josh D'Amaro said in April that the company is still working on the app, and no date has been set for its launch.

Comments

The comments section will be displayed after the page is published.

H

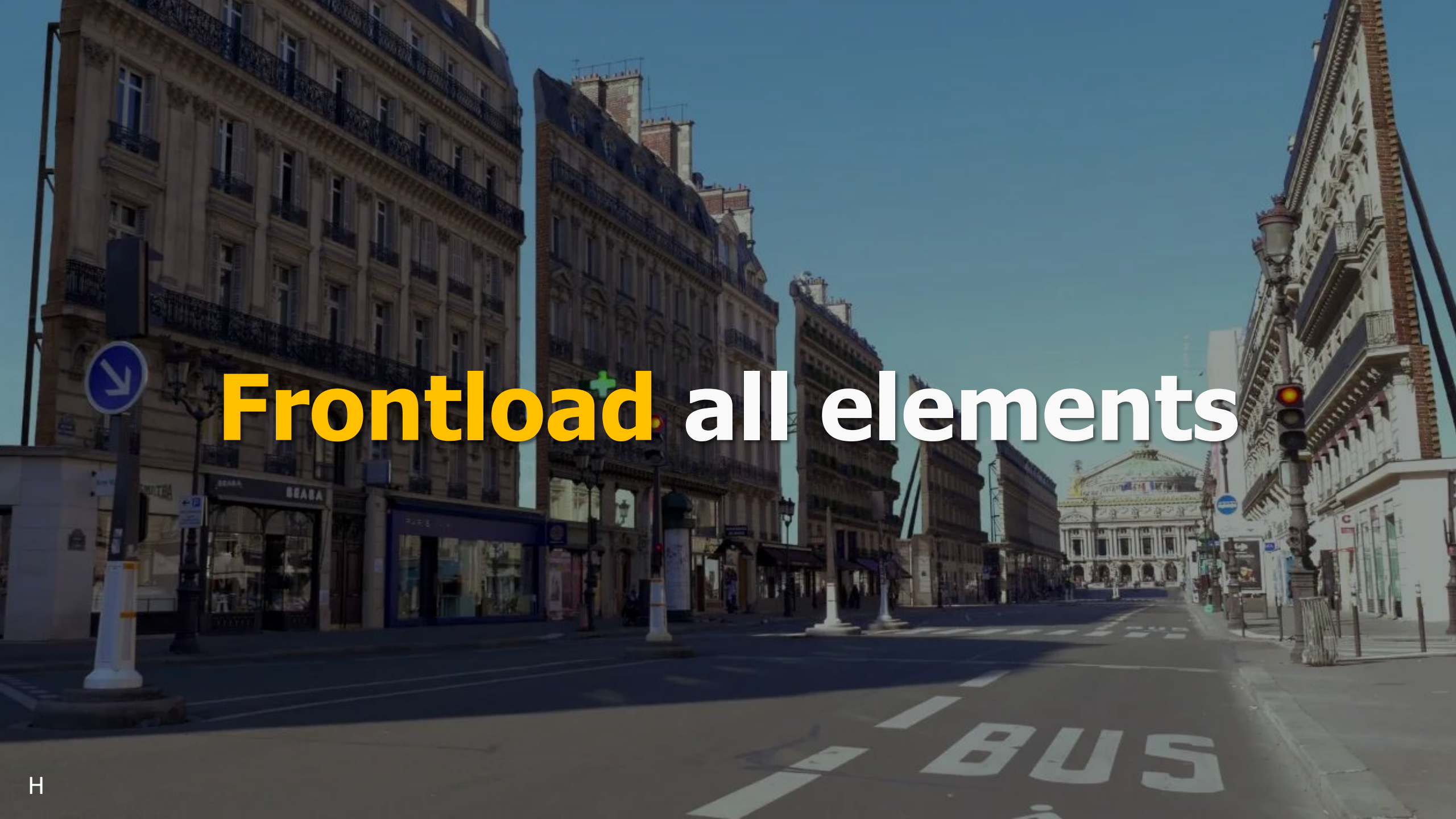

Frontload all elements

H

H

First 2 paragraphs

[redacted]

First 2 paragraphs

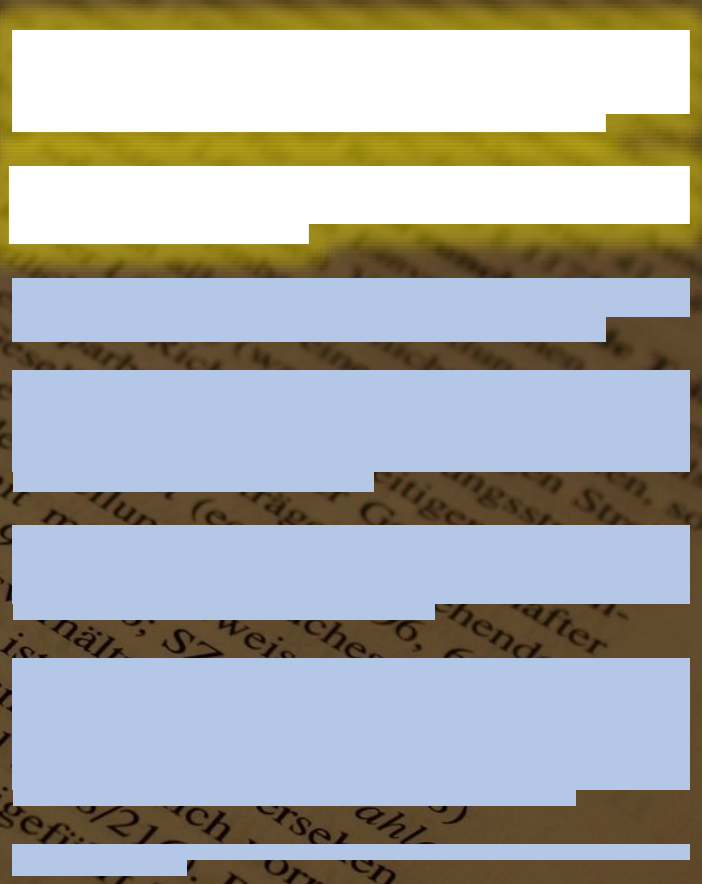

H

Use clear headings and sub-headings

H

Contoso Inc. policies and procedures

Lorem ipsum dolor sit amet, consectetur adipiscing elit. Donec consectetur commodo risus eu semper. Etiam dignissim, nulla sit amet congue suscipit, sapien velit fringilla turpis, at posuere libero purus vitae mauris. In semper tortor blandit rhoncus pellentesque. Pellentesque volutpat metus in urna consectetur, nec tincidunt ex ornare. Sed rutrum sem non ex iaculis, vel venenatis urna congue. Nulla non condimentum lacus, in tempor nunc. Donec ultricies congue ligula, in sollicitudin lacus dapibus non.

Contoso Inc. standard templates

Etiam bibendum feugiat tellus, eu vehicula ex ultricies fringilla. Cras id elit dictum, congue justo non, mattis nunc. Fusce sodales, felis vel porttitor gravida, diam augue feugiat urna, eget rhoncus nisi metus eu massa. Duis quis vulputate mi, at facilisis ligula. Quisque gravida volutpat ligula, ut iaculis erat condimentum sit amet. Praesent eu augue consectetur, facilisis nisi sit amet, interdum felis. Duis eleifend sed ipsum sit amet ultricies. Aliquam erat volutpat. Proin quis purus enim.

Contoso Inc. holiday schedule

Suspendisse aliquet condimentum odio eget tempus. Nunc vulputate magna vel felis aliquet, ut varius arcu facilisis. Phasellus ornare nisi odio, eu tincidunt mi finibus quis. Aenean lacinia at neque nec iaculis. Nunc quam sem, pretium sed velit non, mattis elementum lorem. Nam convallis urna arcu, sit amet finibus metus iaculis eu. Donec hendrerit lectus ultrices justo facilisis aliquet. Mauris interdum dapibus justo, ut interdum sem aliquam in. Vivamus at sapien sagittis, aliquam neque vitae, gravida sem. Nullam feugiat est a leo sagittis, a sagittis erat faucibus.

First 2 words (~11 characters)

H

Contoso Inc. policies and procedures

Lorem ipsum dolor sit amet, consectetur adipiscing elit. Donec consectetur commodo risus eu semper. Etiam dignissim, nulla sit amet congue suscipit, sapien velit fringilla turpis, at posuere libero purus vitae mauris. In semper tortor blandit rhoncus pellentesque. Pellentesque volutpat metus in urna consectetur, nec tincidunt ex ornare. Sed rutrum sem non ex iaculis, vel venenatis urna congue. Nulla non condimentum lacus, in tempor nunc. Donec ultricies congue ligula, in sollicitudin lacus dapibus non.

Contoso Inc. standard templates

Etiam bibendum feugiat tellus, eu vehicula ex ultricies fringilla. Cras id elit dictum, congue justo non, mattis nunc. Fusce sodales, felis vel porttitor gravida, diam augue feugiat urna, eget rhoncus nisi metus eu massa. Duis quis vulputate mi, at facilisis ligula. Quisque gravida volutpat ligula, ut iaculis erat condimentum sit amet. Praesent eu augue consectetur, facilisis nisi sit amet, interdum felis. Duis eleifend sed ipsum sit amet ultricies. Aliquam erat volutpat. Proin quis purus enim.

Contoso Inc. holiday schedule

Suspendisse aliquet condimentum odio eget tempus. Nunc vulputate magna vel felis aliquet, ut varius arcu facilisis. Phasellus ornare nisi odio, eu tincidunt mi finibus quis. Aenean lacinia at neque nec iaculis. Nunc quam sem, pretium sed velit non, mattis elementum lorem. Nam convallis urna arcu, sit amet finibus metus iaculis eu. Donec hendrerit lectus ultrices justo facilisis aliquet. Mauris interdum dapibus justo, ut interdum sem aliquam in. Vivamus at sapien sagittis, aliquam neque vitae, gravida sem. Nullam feugiat est a leo sagittis, a sagittis erat faucibus.

Contoso Inc.

Lorem ipsum dolor sit amet, consectetur adipiscing elit. Donec consectetur commodo risus eu semper. Etiam dignissim, nulla sit amet congue suscipit, sapien velit fringilla turpis, at posuere libero purus vitae mauris. In semper tortor blandit rhoncus pellentesque. Pellentesque volutpat metus in urna consectetur, nec tincidunt ex ornare. Sed rutrum sem non ex iaculis, vel venenatis urna congue. Nulla non condimentum lacus, in tempor nunc. Donec ultricies congue ligula, in sollicitudin lacus dapibus non.

Contoso Inc.

Etiam bibendum feugiat tellus, eu vehicula ex ultricies fringilla. Cras id elit dictum, congue justo non, mattis nunc. Fusce sodales, felis vel porttitor gravida, diam augue feugiat urna, eget rhoncus nisi metus eu massa. Duis quis vulputate mi, at facilisis ligula. Quisque gravida volutpat ligula, ut iaculis erat condimentum sit amet. Praesent eu augue consectetur, facilisis nisi sit amet, interdum felis. Duis eleifend sed ipsum sit amet ultricies. Aliquam erat volutpat. Proin quis purus enim.

Contoso Inc.

Suspendisse aliquet condimentum odio eget tempus. Nunc vulputate magna vel felis aliquet, ut varius arcu facilisis. Phasellus ornare nisi odio, eu tincidunt mi finibus quis. Aenean lacinia at neque nec iaculis. Nunc quam sem, pretium sed velit non, mattis elementum lorem. Nam convallis urna arcu, sit amet finibus metus iaculis eu. Donec hendrerit lectus ultrices justo facilisis aliquet. Mauris interdum dapibus justo, ut interdum sem aliquam in. Vivamus at sapien sagittis, aliquam neque vitae, gravida sem. Nullam feugiat est a leo sagittis, a sagittis erat faucibus.

H

Policies and procedures

Lorem ipsum dolor sit amet, consectetur adipiscing elit. Donec consectetur commodo risus eu semper. Etiam dignissim, nulla sit amet congue suscipit, sapien velit fringilla turpis, at posuere libero purus vitae mauris. In semper tortor blandit rhoncus pellentesque. Pellentesque volutpat metus in urna consectetur, nec tincidunt ex ornare. Sed rutrum sem non ex iaculis, vel venenatis urna congue. Nulla non condimentum lacus, in tempor nunc. Donec ultricies congue ligula, in sollicitudin lacus dapibus non.

Standard templates

Etiam bibendum feugiat tellus, eu vehicula ex ultricies fringilla. Cras id elit dictum, congue justo non, mattis nunc. Fusce sodales, felis vel porttitor gravida, diam augue feugiat urna, eget rhoncus nisi metus eu massa. Duis quis vulputate mi, at facilisis ligula. Quisque gravida volutpat ligula, ut iaculis erat condimentum sit amet. Praesent eu augue consectetur, facilisis nisi sit amet, interdum felis. Duis eleifend sed ipsum sit amet ultricies. Aliquam erat volutpat. Proin quis purus enim.

Holiday schedule

Suspendisse aliquet condimentum odio eget tempus. Nunc vulputate magna vel felis aliquet, ut varius arcu facilisis. Phasellus ornare nisi odio, eu tincidunt mi finibus quis. Aenean lacinia at neque nec iaculis. Nunc quam sem, pretium sed velit non, mattis elementum lorem. Nam convallis urna arcu, sit amet finibus metus iaculis eu. Donec hendrerit lectus ultrices justo facilisis aliquet. Mauris interdum dapibus justo, ut interdum sem aliquam in. Vivamus at sapien sagittis, aliquam neque vitae, gravida sem. Nullam feugiat est a leo sagittis, a sagittis erat faucibus.

Headline (hed) and Lede (lead)

H

Headline (hed) and Lede (lead)

H

Headline 1

Lorem ipsum dolor sit amet, consectetur adipiscing elit. Donec consectetur commodo risus eu semper. Etiam dignissim, nulla sit amet congue suscipit, sapien velit fringilla turpis, at posuere libero purus vitae mauris. In semper tortor blandit rhoncus pellentesque. Pellentesque volutpat metus in urna consectetur, nec tincidunt ex ornare. Sed rutrum sem non ex iaculis, vel venenatis urna congue. Nulla non condimentum lacus, in tempor nunc. Donec ultricies congue ligula, in sollicitudin lacus dapibus non.

Headline 2

Etiam bibendum feugiat tellus, eu vehicula ex ultricies fringilla. Cras id elit dictum, congue justo non, mattis nunc. Fusce sodales, felis vel porttitor gravida, diam augue feugiat urna, eget rhoncus nisi metus eu massa. Duis quis vulputate mi, at facilisis ligula. Quisque gravida volutpat ligula, ut iaculis erat condimentum sit amet. Praesent eu augue consectetur, facilisis nisi sit amet, interdum felis. Duis eleifend sed ipsum sit amet ultricies. Aliquam erat volutpat. Proin quis purus enim.

Headline 3

Suspendisse aliquet condimentum odio eget tempus. Nunc vulputate magna vel felis aliquet, ut varius arcu facilisis. Phasellus ornare nisi odio, eu tincidunt mi finibus quis. Aenean lacinia at neque nec iaculis. Nunc quam sem, pretium sed velit non, mattis elementum lorem. Nam convallis urna arcu, sit amet finibus metus iaculis eu. Donec hendrerit lectus ultrices justo facilisis aliquet. Mauris interdum dapibus justo, ut interdum sem aliquam in. Vivamus at sapien sagittis, aliquam neque vitae, gravida sem. Nullam feugiat est a leo sagittis, a sagittis erat faucibus.

H

Headlines hook readers' attention

- Use the active voice
- Write in present tense
- Avoid bad breaks

The passive voice is used by many people

H

Manley @LordManley · 1d

That took me a moment.

Show this thread

Avril Lavigne singing Bite Me on The Dick Clark Rockin New Years Eve 2022 Show

avrilscult · 2.1K views · 2 days ago

H

Avril Lavigne singing Bite Me on The Dick Clark Rockin New Years Eve 2022 Show

avrilscult · 2.1K views · 2 days ago

Avril Lavigne singing “Bite Me” on The Dick Clark Rockin New Years Eve 2022 Show

avrilscult · 2.1K views · 2 days ago

Headlines hook readers' attention

- Use the active voice
- Write in present tense
- Avoid bad breaks
- Make headline appropriate to the story

Chick Accuses Some of Her Male Colleagues of Sexism

■ **Bias:** Councilwoman suggests 'gender sensitivity' training be required.

By HUGO MARTIN
TIMES STAFF WRITER

Accusing some of her male colleagues of sexism, Los Angeles Councilwoman Laura Chick lashed out at City Hall on Thursday as the "most sexist, good-old-boys work environment that I've ever been in."

Chick, one of four women on the 15-member panel, made the comments during a luncheon honoring women police officers, an event attended by Mayor Richard Riordan, Police Chief Willie L. Hi

H

Headlines hook readers' attention

- Use the active voice
- Write in present tense
- Avoid bad breaks
- Make headline appropriate to the story
- Know Where TO CaPiTalize

First letter only

Headline (hed) and Lede (lead)

H

Headline 1

Lorem ipsum dolor sit amet, consectetur adipiscing elit. Donec consectetur commodo risus eu semper. Etiam dignissim, nulla sit amet congue suscipit, sapien velit fringilla turpis, at posuere libero purus vitae mauris. In semper tortor blandit rhoncus pellentesque. Pellentesque volutpat metus in urna consectetur, nec tincidunt ex ornare. Sed rutrum sem non ex iaculis, vel venenatis urna congue. Nulla non condimentum lacus, in tempor nunc. Donec ultricies congue ligula, in sollicitudin lacus dapibus non.

Headline 2

Etiam bibendum feugiat tellus, eu vehicula ex ultricies fringilla. Cras id elit dictum, congue justo non, mattis nunc. Fusce sodales, felis vel porttitor gravida, diam augue feugiat urna, eget rhoncus nisi metus eu massa. Duis quis vulputate mi, at facilisis ligula. Quisque gravida volutpat ligula, ut iaculis erat condimentum sit amet. Praesent eu augue consectetur, facilisis nisi sit amet, interdum felis. Duis eleifend sed ipsum sit amet ultricies. Aliquam erat volutpat. Proin quis purus enim.

Headline 3

Suspendisse aliquet condimentum odio eget tempus. Nunc vulputate magna vel felis aliquet, ut varius arcu facilisis. Phasellus ornare nisi odio, eu tincidunt mi finibus quis. Aenean lacinia at neque nec iaculis. Nunc quam sem, pretium sed velit non, mattis elementum lorem. Nam convallis urna arcu, sit amet finibus metus iaculis eu. Donec hendrerit lectus ultrices justo facilisis aliquet. Mauris interdum dapibus justo, ut interdum sem aliquam in. Vivamus at sapien sagittis, aliquam neque vitae, gravida sem. Nullam feugiat est a leo sagittis, a sagittis erat faucibus.

H

Headline 1

Lorem ipsum dolor sit amet, consectetur adipiscing elit. Donec consectetur commodo risus eu semper. Etiam dignissim, nulla sit amet congue suscipit, sapien velit fringilla turpis, at posuere libero purus vitae mauris. In semper tortor blandit rhoncus pellentesque. Pellentesque volutpat metus in urna consectetur, nec tincidunt ex ornare. Sed rutrum sem non ex iaculis, vel venenatis urna congue. Nulla non condimentum lacus, in tempor nunc. Donec ultricies congue ligula, in sollicitudin lacus dapibus non.

Headline 2

Etiam bibendum feugiat tellus, eu vehicula ex ultricies fringilla. Cras id elit dictum, congue justo non, mattis nunc. Fusce sodales, felis vel porttitor gravida, diam augue feugiat urna, eget rhoncus nisi metus eu massa. Duis quis vulputate mi, at facilisis ligula. Quisque gravida volutpat ligula, ut iaculis erat condimentum sit amet. Praesent eu augue consectetur, facilisis nisi sit amet, interdum felis. Duis eleifend sed ipsum sit amet ultricies. Aliquam erat volutpat. Proin quis purus enim.

Headline 3

Suspendisse aliquet condimentum odio eget tempus. Nunc vulputate magna vel felis aliquet, ut varius arcu facilisis. Phasellus ornare nisi odio, eu tincidunt mi finibus quis. Aenean lacinia at neque nec iaculis. Nunc quam sem, pretium sed velit non, mattis elementum lorem. Nam convallis urna arcu, sit amet finibus metus iaculis eu. Donec hendrerit lectus ultrices justo facilisis aliquet. Mauris interdum dapibus justo, ut interdum sem aliquam in. Vivamus at sapien sagittis, aliquam neque vitae, gravida sem. Nullam feugiat est a leo sagittis, a sagittis erat faucibus.

H

Ledes convince readers to click

- **What** happened? What could happen?
- **Who** did it? Who did it happen to? Who else was involved?
- **Where** did it happen? Where else will be impacted?
- **When** did it happen? When is it going to happen?
- **Why** did it happen? Why will your reader care?
- **How** did it happen? How does it work?

H

ACTIVITY

10 Tips for Creating a Good User Experience with FAQs

For questions avoid multicolumn layouts

To help with question phrasing review your search queries

When the question is updated consider adding a date

Download the Word document with Activity 1 content

E

ACTIVITY

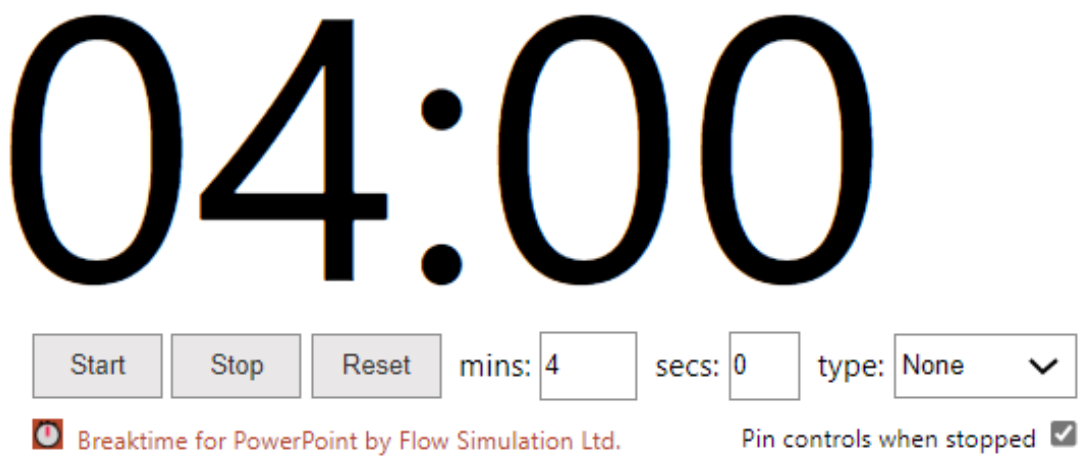

Download the Word document with Activity 1 content

E

10 Tips for Creating a Good User Experience with FAQs → FAQs- Creating a Good User Experience

For questions, avoid multicolumn layouts → Avoid multicolumn layouts for questions

To help with question phrasing, review your search queries → Review your search queries to help with question phrasing

When the question is updated, consider adding a date → Consider adding a date for when the question was last updated

E

Onbirding

E

Onboarding

E

Use plain language

E

Readability Statistics Recommendations

Word count: As low as possible
Words per sentence: 15-20
Flesch-Kincaid reading ease: Higher than 50
Flesch-Kincaid grade level:
    Transition pages: Grade 6
    Destination pages: Grade 8-10

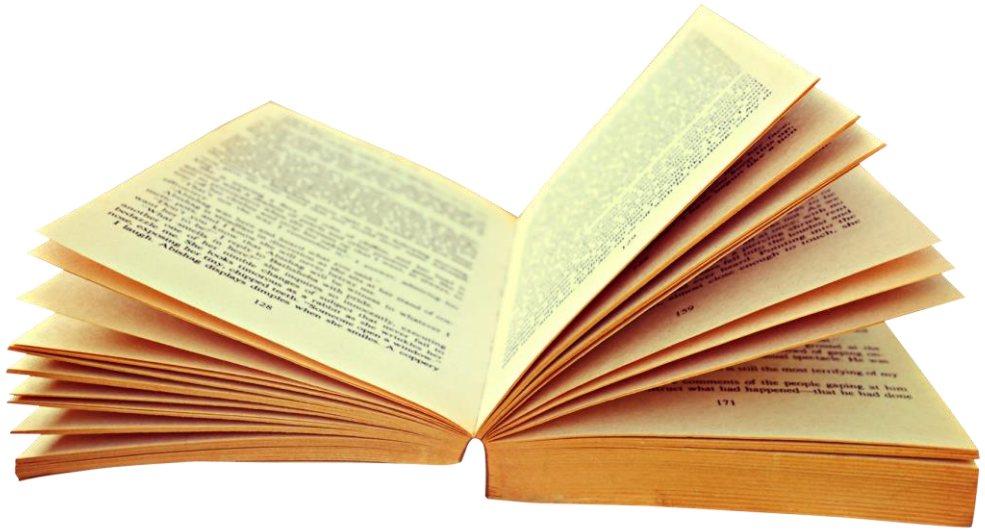

Tools

- Microsoft Word https://goo.gl/b5XLgc
- Readability analyzer http://datayze.com/readabilityanalyzer.php
- Hemingway App http://www.hemingwayapp.com

E

~~Learn more~~

~~Click here~~

E

“Learn More” Links: You Can Do Better (nngroup.com): https://www.nngroup.com/articles/learn-more-links/

4S for Better Link Labels

Specific

Sincere

Substantial

Succinct

Pernice, Kara. “Better Link Labels: 4Ss for Encouraging Clicks.” *Nielsen Norman Group*, 2014, www.nngroup.com/articles/better-link-labels/.

E

In the overflow effect, elements *around an attractive element receive attention* simply because of proximity

E

10 Tips for Creating a Good User Experience with FAQs

Welcome to the blog about using frequently asked question to create a good user experience! Frequently Asked Questions can be a great solution if you find yourself answering the same questions over email and phone repeatedly. This much needed information would be accessible through self-service if it was added to your intranet opening up more of your time for other important tasks.

The first recommendation is to look at your current information architecture and add the answers to those questions in context. This reduces the numbers of places someone would need to look to find the information they are seeking and thus reduces the mental currency someone is spending on your site navigating to content. You can also use FAQ for clues where there might be issues in finding content in your current information architecture or challenges in the business process they are trying to complete.

If you have FAQs that don't fit into your current IA, you might consider making a FAQ list. Keep these tips in mind:

Do not make up questions that are not being asked.

This was listed as #7 in Nielsen Norman Group's Top 10 Web Design Mistakes of 2002. As they warn, "Infrequently asked questions undermine users' trust in the website and damage their understanding of its navigation." Your FAQ list should come from emails, live questions, help desk tickets, etc. You may need to make them more generic, so they answer questions for a larger audience.

Group your FAQs by topic.

It can be incredibly cumbersome to scan these lists of questions and sorting the question in alphabetical order has no known meaning to the end user. If you group by topic alphabetically, the end user can use that information architecture to quickly drill down to the area they are seeking help. As you expand these topics, you may find you have enough FAQs to create a new SharePoint page and link it to your existing information architecture. FAQ pages should not be where information goes to die. It is where new information may be starting its journey on your intranet.

This might be a good opportunity to use SharePoint collapsible sections with your topic titles. As of December 2021 searching on the page with Control + F will not show results in the collapsed sections so this may be reason enough to avoid collapsible sections at this time. The text in those sections will appear in search. Explore my post on Using Collapsible Sections with User Experience in Mind to learn more.

Create a strong visual hierarchy.

You want your topics to be the highest visual weight on the page followed by the questions. You might consider using a bold header for the topics, then a smaller header font for the questions. Nielsen Norman Group recommends printing the FAQ page then squinting at it from 10 feet away as a quick test to decide if the headings are big enough to locate quickly.

Avoid multicolumn layouts for questions.

This goes against the natural reading pattern of the F-shaped reading pattern (where end users scan titles and continue down the page).

10 Tips for Creating a Good User Experience with FAQs

Welcome to the blog about using frequently asked question to create a good user experience! Frequently Asked Questions can be a great solution if you find yourself answering the same questions over email and phone repeatedly. This much needed information would be accessible through self-service if it was added to your intranet opening up more of your time for other important tasks.

The first recommendation is to look at your current information architecture and add the answers to those questions in context. This reduces the numbers of places someone would need to look to find the information they are seeking and thus reduces the mental currency someone is spending on your site navigating to content. You can also use FAQ for clues where there might be issues in finding content in your current information architecture or challenges in the business process they are trying to complete.

If you have FAQs that don't fit into your current IA, you might consider making a FAQ list. Keep these tips in mind:

Do not make up questions that are not being asked.

This was listed as #7 in Nielsen Norman Group's Top 10 Web Design Mistakes of 2002. As they warn, "Infrequently asked questions undermine users' trust in the website and damage their understanding of its navigation." Your FAQ list should come from emails, live questions, help desk tickets, etc. You may need to make them more generic, so they answer questions for a larger audience.

Group your FAQs by topic.

It can be incredibly cumbersome to scan these lists of questions and sorting the question in alphabetical order has no known meaning to the end user. If you group by topic alphabetically, the end user can use that information architecture to quickly drill down to the area they are seeking help. As you expand these topics, you may find you have enough FAQs to create a new SharePoint page and link it to your existing information architecture. FAQ pages should not be where information goes to die. It is where new information may be starting its journey on your intranet.

This might be a good opportunity to use SharePoint collapsible sections with your topic titles. As of December 2021 searching on the page with Control + F will not show results in the collapsed sections so this may be reason enough to avoid collapsible sections at this time. The text in those sections will appear in search. Explore my post on Using Collapsible Sections with User Experience in Mind to learn more.

Create a strong visual hierarchy.

You want your topics to be the highest visual weight on the page followed by the questions. You might consider using a bold header for the topics, then a smaller header font for the questions. Nielsen Norman Group recommends printing the FAQ page then squinting at it from 10 feet away as a quick test to decide if the headings are big enough to locate quickly.

Avoid multicolumn layouts for questions.

This goes against the natural reading pattern of the F-shaped reading pattern (where end users scan titles and continue down the page).

E

Agenda

- Online reading patterns
- Defining your audience & goals
- Designing for scannability
- **Designing destination pages**

H

Average Time Spent by Page Type (in seconds)

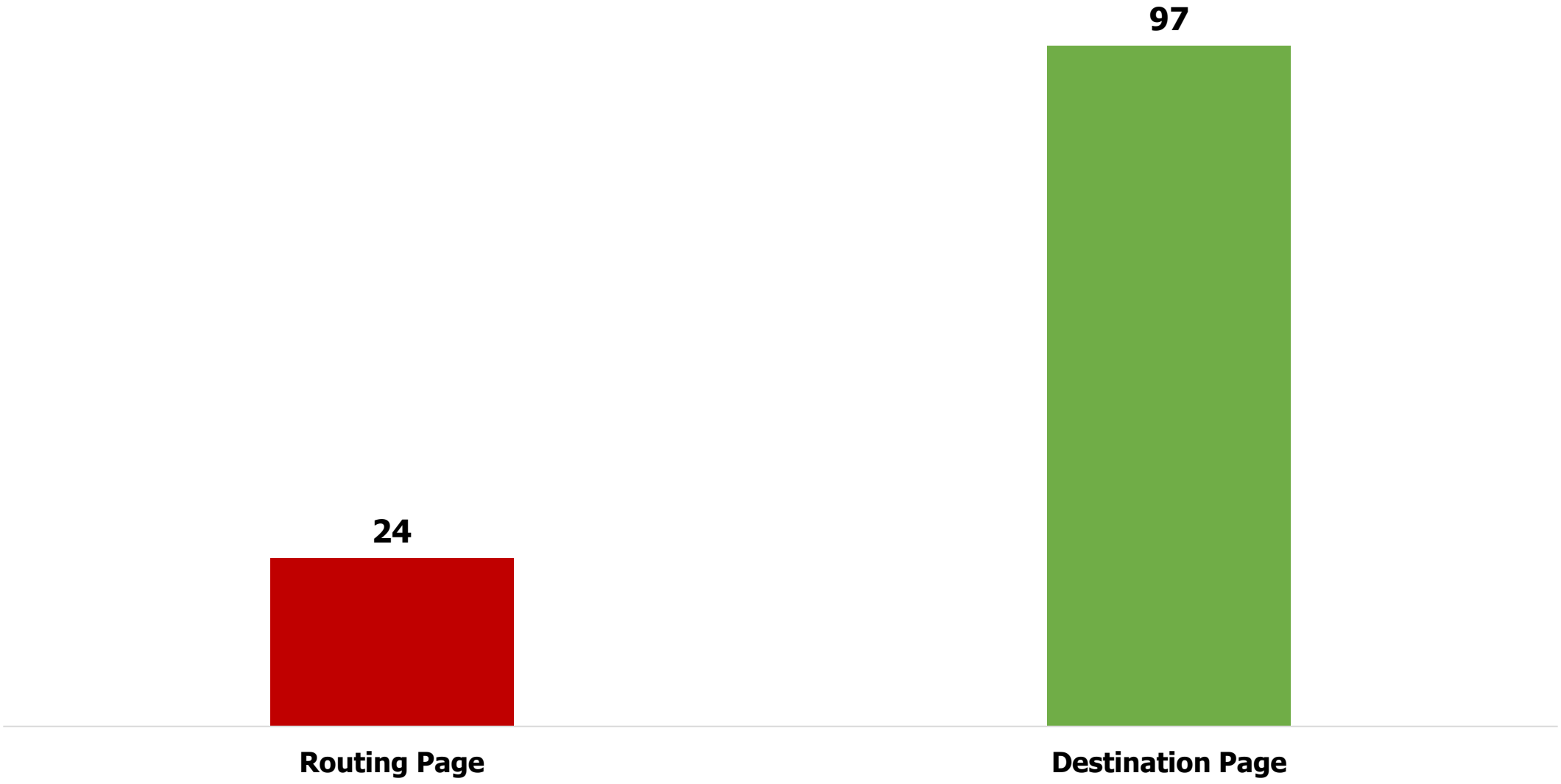

H

Source: Neilson Norman Group

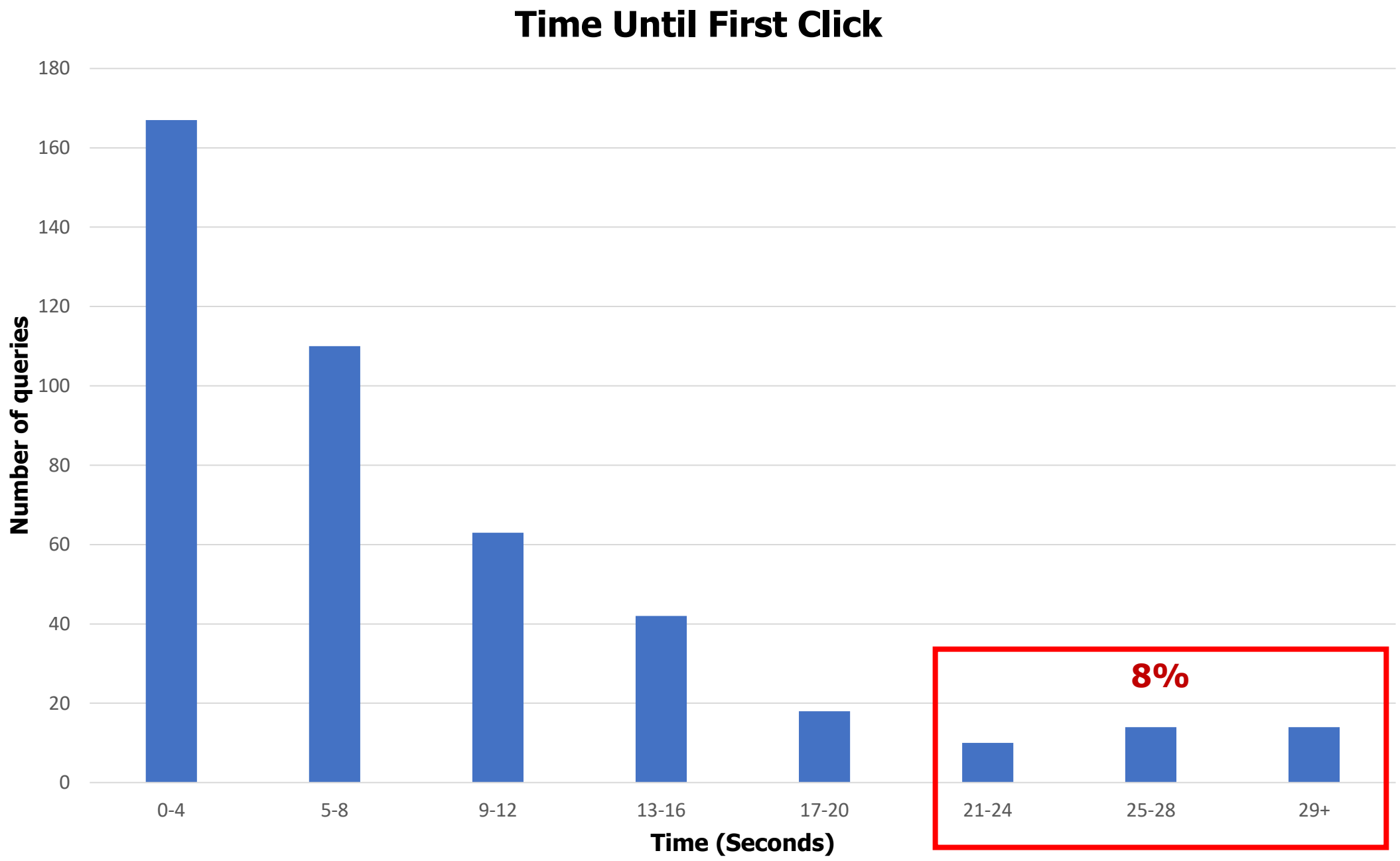

H

Source: Neilson Norman Group

Designing for Destination Pages

H

Skip fluffy first paragraph

H

ACTIVITY

Creating a Good User Experience with FAQs

Welcome to the blog about using frequently asked questions to create a good user experience! We will explore the different tips for creating a good user experience in a frequently asked question list. Frequently Asked Questions can be a great solution if you find yourself answering the same questions over email and phone repeatedly. This much needed information would be accessible through self-service if it was added to your intranet freeing up more of your time for other important tasks.

Download the Word document for Activity 2 content

H

ACTIVITY

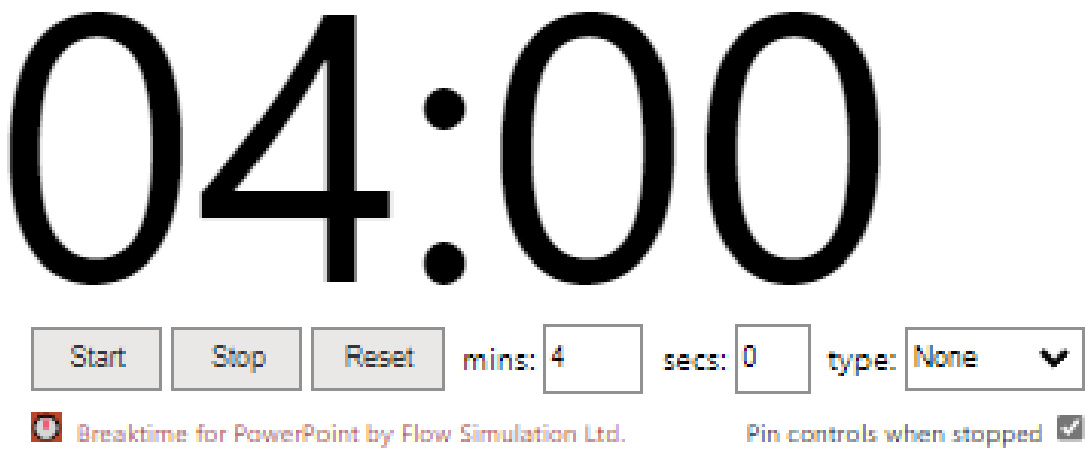

Download the Word document for Activity 2 content

H

Creating a Good User Experience with FAQs

Welcome to the blog about using frequently asked question to create a good user experience! We will explore the different tip for creating a good user experience in a frequently asked question list. Frequently Asked Questions can be a great solution if you find yourself answering the same questions over email and phone repeatedly. This much needed information would be accessible through self-service if it was added to your intranet freeing up more of your time for other important tasks.

Creating a Good User Experience with FAQs

~~Welcome to the blog about using frequently asked question to create a good user experience! We will explore the different tips for creating a good user experience in a frequently asked question list.~~

Frequently Asked Questions can be a great solution if you find yourself answering the same questions over email and phone repeatedly. This much needed information would be accessible through self-service if it was added to your intranet freeing up more of your time for other important tasks.

H

Use left-aligned text

E

Creating a Good User Experience with FAQs

Frequently Asked Questions can be a great solution if you find yourself answering the same questions over email and phone repeatedly. This much needed information would be accessible through self-service if it was added to your intranet opening up more of your time for other important tasks.

E

Creating a Good User Experience with FAQs

Frequently Asked Questions can be a great solution if you find yourself answering the same questions over email and phone repeatedly. This much needed information would be accessible through self-service if it was added to your intranet opening up more of your time for other important tasks.

E

Avoid walls of text

E

Welcome to the blog about using frequently asked question to create a good user experience! Frequently Asked Questions can be a great solution if you find yourself answering the same questions over email and phone repeatedly. This much needed information would be accessible through self-service if it was added to your intranet opening up more of your time for other important tasks.

The first recommendation is to look at your current information architecture and add the answers to those questions in context. This reduces the numbers of places someone would need to look to find the information they are seeking and thus reduces the mental currency someone is spending on your site navigating to content. You can also use FAQ for clues where there might be issues in finding content in your current information architecture or challenges in the business process they are trying to complete.

If you have FAQs that don't fit into your current IA, you might consider making a FAQ list. Keep these tips in mind:

Do not make up questions that are not being asked. This was listed as #7 in Nielsen Norman Group's Top 10 Web Design Mistakes of 2002. As they warn, "Infrequently asked questions undermine users' trust in the website and damage their understanding of its navigation." Your FAQ list should come from emails, live questions, help desk tickets, etc. You may need to make them more generic, so they answer questions for a larger audience.

Group your FAQs by topic. It can be incredibly cumbersome to scan these lists of questions and sorting the question in alphabetical order has no known meaning to the end user. If you group by topic alphabetically, the end user can use that information architecture to quickly drill down to the area they are seeking help. As you expand these topics, you may find you have enough FAQs to create a new SharePoint page and link it to your existing information architecture. FAQ pages should not be where information goes to die. It is where new information may be starting its journey on your intranet.

This might be a good opportunity to use SharePoint collapsible sections with your topic titles. As of December 2021 searching on the page with Control + F will not show results in the collapsed sections so this may be reason enough to avoid collapsible sections at this time. The text in those sections will appear in search. Explore my post on Using Collapsible Sections with User Experience in Mind to learn more.

Create a strong visual hierarchy. You want your topics to be the highest visual weight on the page followed by the questions. You might consider using a bold header for the topics, then a smaller header font for the questions. Nielsen Norman Group recommends printing the FAQ page then squinting at it from 10 feet away as a quick test to decide if the headings are big enough to locate quickly.

Avoid multicolumn layouts for questions. This goes against the natural reading pattern of the F-shaped reading pattern (where end users scan titles and continue down the page).

Direct end users to related content. Your FAQ might be the first of many subsequent questions. Anticipate the end users' needs and link them to additional helpful information. Remember to use the 4S for better link labels and keep these links: Specific- What they will find, not just "learn more." Sincere- Uou link to specific information, not a homepage that would require further navigation to access the mentioned content. Substantial- The link can standalone without additional text. Remember

E

10 Tips for Creating a Good User Experience with FAQs

Welcome to the blog about using frequently asked question to create a good user experience! Frequently Asked Questions can be a great solution if you find yourself answering the same questions over email and phone repeatedly. This much needed information would be accessible through self-service if it was added to your intranet opening up more of your time for other important tasks.

The first recommendation is to look at your current information architecture and add the answers to those questions in context. This reduces the numbers of places someone would need to look to find the information they are seeking and thus reduces the mental currency someone is spending on your site navigating to content. You can also use FAQ for clues where there might be issues in finding content in your current information architecture or challenges in the business process they are trying to complete.

If you have FAQs that don't fit into your current IA, you might consider making a FAQ list. Keep these tips in mind:

Do not make up questions that are not being asked.

This was listed as #7 in Nielsen Norman Group's Top 10 Web Design Mistakes of 2002. As they warn, "Infrequently asked questions undermine users' trust in the website and damage their understanding of its navigation." Your FAQ list should come from emails, live questions, help desk tickets, etc. You may need to make them more generic, so they answer questions for a larger audience.

Group your FAQs by topic.

It can be incredibly cumbersome to scan these lists of questions and sorting the question in alphabetical order has no known meaning to the end user. If you group by topic alphabetically, the end user can use that information architecture to quickly drill down to the area they are seeking help. As you expand these topics, you may find you have enough FAQs to create a new SharePoint page and link it to your existing information architecture. FAQ pages should not be where information goes to die. It is where new information may be starting its journey on your intranet.

This might be a good opportunity to use SharePoint collapsible sections with your topic titles. As of December 2021 searching on the page with Control + F will not show results in the collapsed sections so this may be reason enough to avoid collapsible sections at this time. The text in those sections will appear in search. Explore my post on Using Collapsible Sections with User Experience in Mind to learn more.

Create a strong visual hierarchy.

You want your topics to be the highest visual weight on the page followed by the questions. You might consider using a bold header for the topics, then a smaller header font for the questions. Nielsen Norman Group recommends printing the FAQ page then squinting at it from 10 feet away as a quick test to decide if the headings are big enough to locate quickly.

Avoid multicolumn layouts for questions.

This goes against the natural reading pattern of the F-shaped reading pattern (where end users scan titles and continue down the page).

E

ACTIVITY

Direct end users to related content.

Your FAQ might be the first of many subsequent questions. Anticipate the end users' needs and link them to additional helpful information. Remember to use the 4S for better link labels and keep these links: Make the link specific. What they will find, not just "learn more." Ensure the link is sincere. You link to specific information, not a homepage that would require further navigation to access the mentioned content. The link should be substantial. The link can standalone without additional text. Remember that end users are scanning, and link formatting typically stands out so an end user may read the link title and no additional text. The link should be succinct. Front load your link labels as people typically read the first 11 characters while scanning (source). You want the link to be just long enough to deliver on the above three promises.

Download the Word document for Activity 3 content

E

ACTIVITY

06:00

Start Stop Reset mins: 6 secs: 0 type: None

Breaktime for PowerPoint by Flow Simulation Ltd. Pin controls when stopped

Download the Word document for Activity 3 content

E

Direct end users to related content.

Your FAQ might be the first of many subsequent questions. Anticipate the end users' needs and link them to additional helpful information. Remember to use the 4S for better link labels and keep these links: Make the link specific. What they will find, not just "learn more." Ensure the link is sincere. You link to specific information, not a homepage that would require further navigation to access the mentioned content. The link should be substantial. The link can standalone without additional text. Remember that end users are scanning, and link formatting typically stands out so an end user may read the link title and no additional text. The link should be succinct. Front load your link labels as people typically read the first 11 characters while scanning (source). You want the link to be just long enough to deliver on the above three promises.

Direct end users to related content.

Your FAQ might be the first of many subsequent questions. Anticipate the end users' needs and link them to additional helpful information. Remember to use the 4S for better link labels and keep these links:

- **Specific**- What they will find, not just "learn more."
- **Sincere**- You link to specific information, not a homepage that would require further navigation to access the mentioned content.
- **Substantial**- The link can standalone without additional text. Remember that end users are scanning, and link formatting typically stands out so an end user may read the link title and no additional text.
- **Succinct**- Front load your link labels as people typically read the first 11 characters while scanning (source). You want the link to be just long enough to deliver on the above three promises.

E

H

The Recommended Charts command on the Insert tab recommends charts that are likely to represent your data well. Use the command when you want to visually present data, and you're not sure how to do it.

Source: https://docs.microsoft.com/style-guide/top-10-tips-style-voice

H

Create a chart that's just right for your data by using the **Recommend Charts** command on the **Insert** tab.

Source: https://docs.microsoft.com/style-guide/top-10-tips-style-voice

H

Microsoft Style Guide

Describing interactions with UI
Guidance on word choice

For example: *Select*

- Select the **Modify** button.
- For **Alignment**, select **Left**.
- Select the text, open the shortcut menu, and then select **Font**.

Formatting text in instructions
Consistent layout helps end users locate and interpret information

H

E

WE ARE LINGS YOU CAN TRUST US

LINGsCARS.com

The UK's craziest car leasing website!

Menu

- Home
- Cars / Vans
- Customers
- About Ling
- Fun stuff
- Live staff

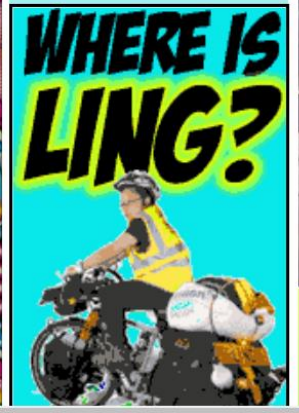

OUR BEST SELLING CAR LEASING DEALS!

Facebook Twitter

9 DELIVERIES IN LAST WEEK

- Hyundai Tucson — Top Secret
- Hyundai Santa Fe Est.. — Pitstone
- Kia XCeed Hatchback — Glasgow
- Audi A6 Saloon — Barnsley
- Ford Transit Custom .. — York
- Nissan Juke — ESSEX
- Nissan Qashqai — High Wycom
- Peugeot 208 — Llanberis

Writing for the Web Checklist

- ❑ Defined audience
- ❑ Defined goal
- ❑ Reviewed style guide
- ❑ It is clear
  - Inverted writing
  - Removed modifiers
  - Defined acronyms
- ❑ It is useful
  - Clear call to action
  - Frictionless navigation to next steps
- ❑ It is consistent
  - Sentence vs title casing
  - Correct usage of headers

Web Accessibility Checklist

- ❑ Provide informative, unique page titles
- ❑ Use headings to convey meaning and structure
- ❑ Make link text meaningful
- ❑ Write meaningful text alternatives for images
- ❑ Create transcripts and captions for multimedia
- ❑ Provide clear instructions
- ❑ Keep content clear and concise

Source: https://www.w3.org/WAI/tips/writing/

E

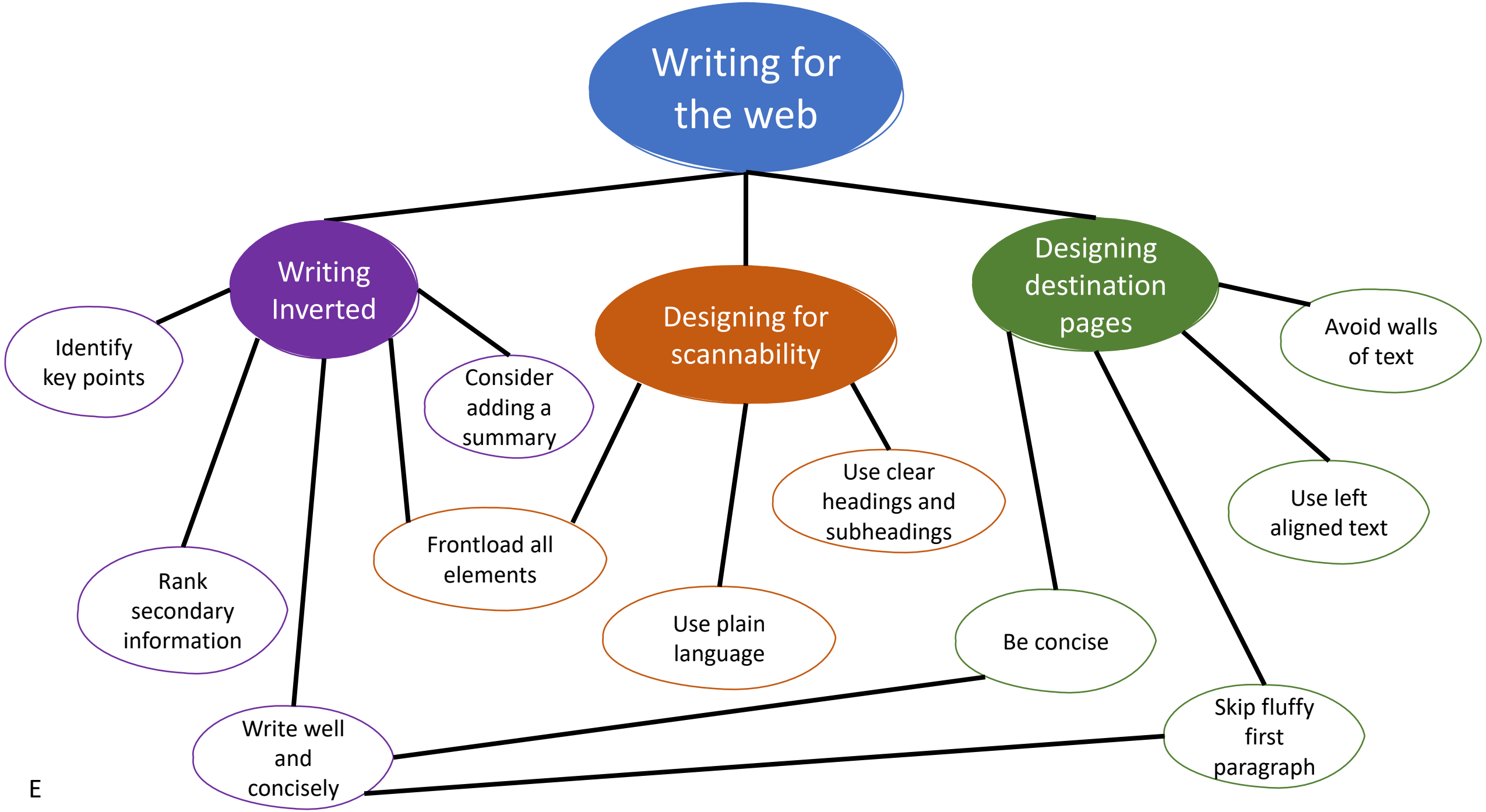
Writing for the web
Writing Inverted
Identify key points
Rank secondary information
Write well and concisely
Consider adding a summary
Frontload all elements
Designing for scannability
Use clear headings and subheadings
Use plain language
Designing destination pages
Avoid walls of text
Use left aligned text
Be concise
Skip fluffy first paragraph

E

Socialize your experience –

Encourage others to sign up for the sessions & continue to contribute

PnP TEAM

Thank you!

https://aka.ms/sharing-is-caring

Resources

- Microsoft Style Guide: https://docs.microsoft.com/en-us/style-guide/welcome/
- How Users Read on the Web: https://www.nngroup.com/articles/how-users-read-on-the-web/
- Writing Style for Print vs Web: https://www.nngroup.com/articles/writing-style-for-print-vs-web/
- Be succinct: https://www.nngroup.com/articles/be-succinct-writing-for-the-web/
- 4S for Better Link Labels: www.nngroup.com/articles/better-link-labels
- World's Best Headlines: https://www.nngroup.com/articles/worlds-best-headlines-bbc-news/
- Accordions Are Not Always the Answer for Complex Content on Desktops: https://www.nngroup.com/articles/accordions-complex-content/
- 10 Tips for Creating a Good User Experience with FAQs: https://emilymancini.com/2021/12/02/406/

We need your help!

Submit your feedback 🗣