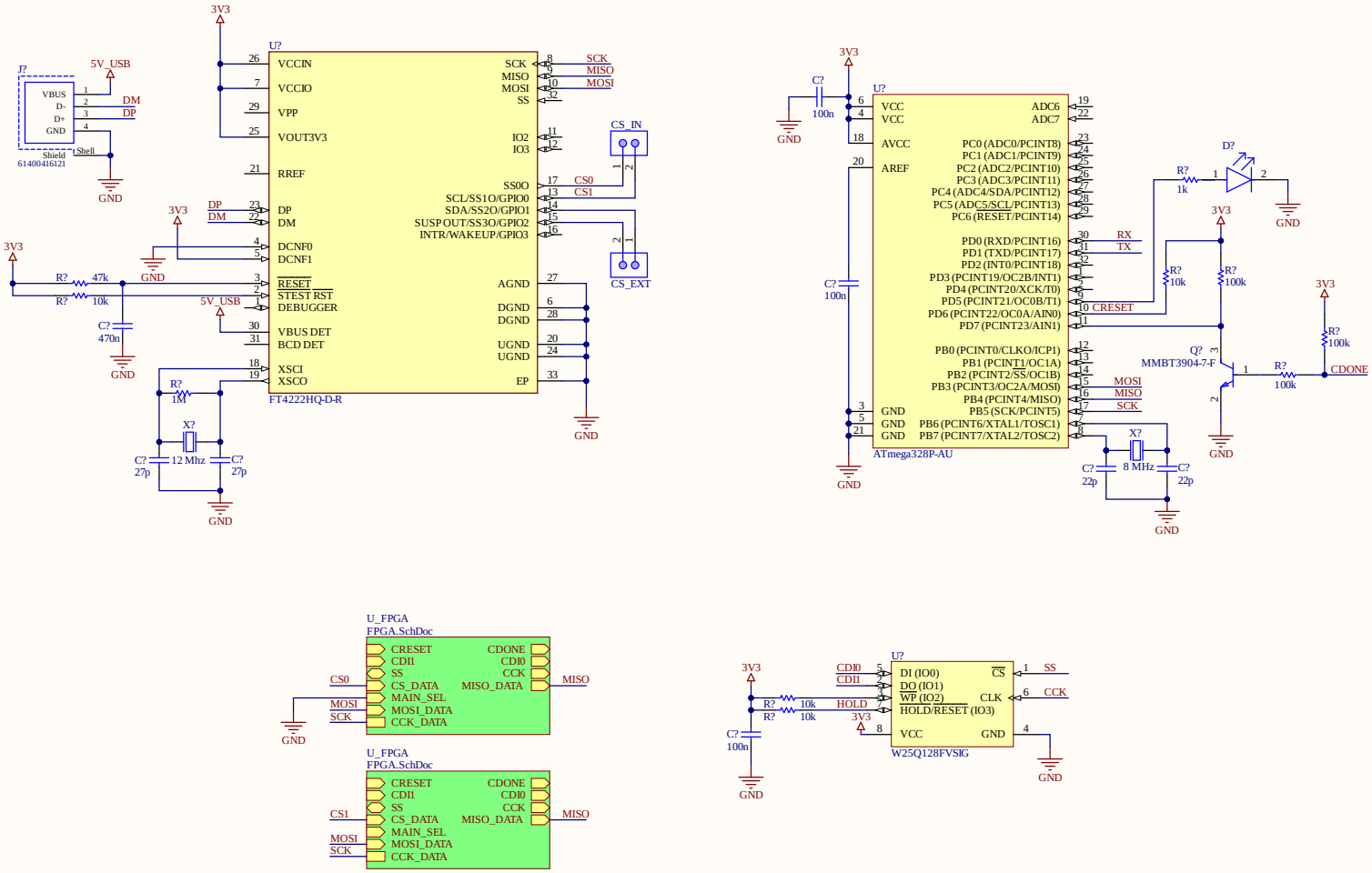

Title		
Size A3	Number	Revision
Date: 9/15/2022		Sheet of
File: C:\Users\..\Main.SchDoc		Drawn By:

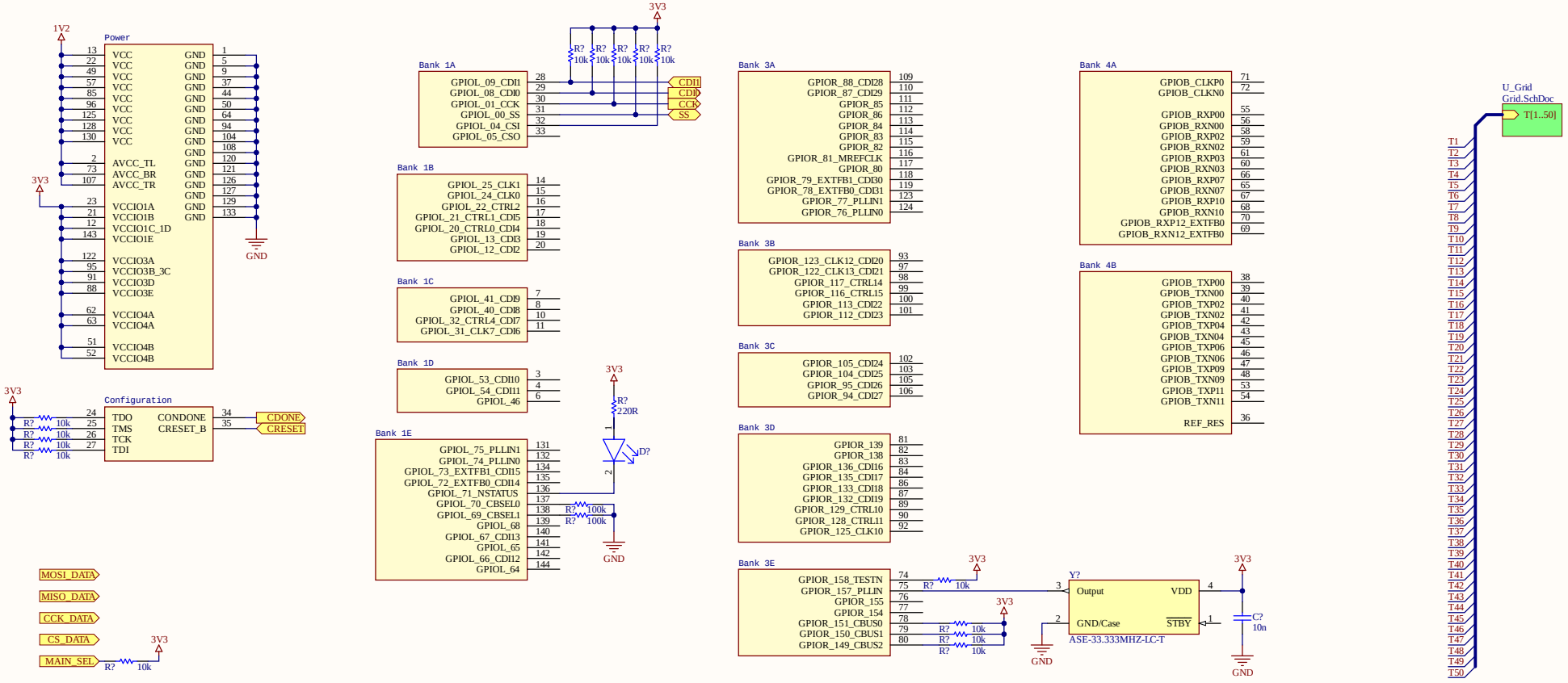

Title		
Size A3	Number	Revision
Date: 9/15/2022		Sheet of
File: C:\Users\..\FPGA.SchDoc		Drawn By:

Title		
Size A	Number	Revision
Date: 9/15/2022		Sheet of
File: C:\Users\..\Grid.SchDoc		Drawn By:

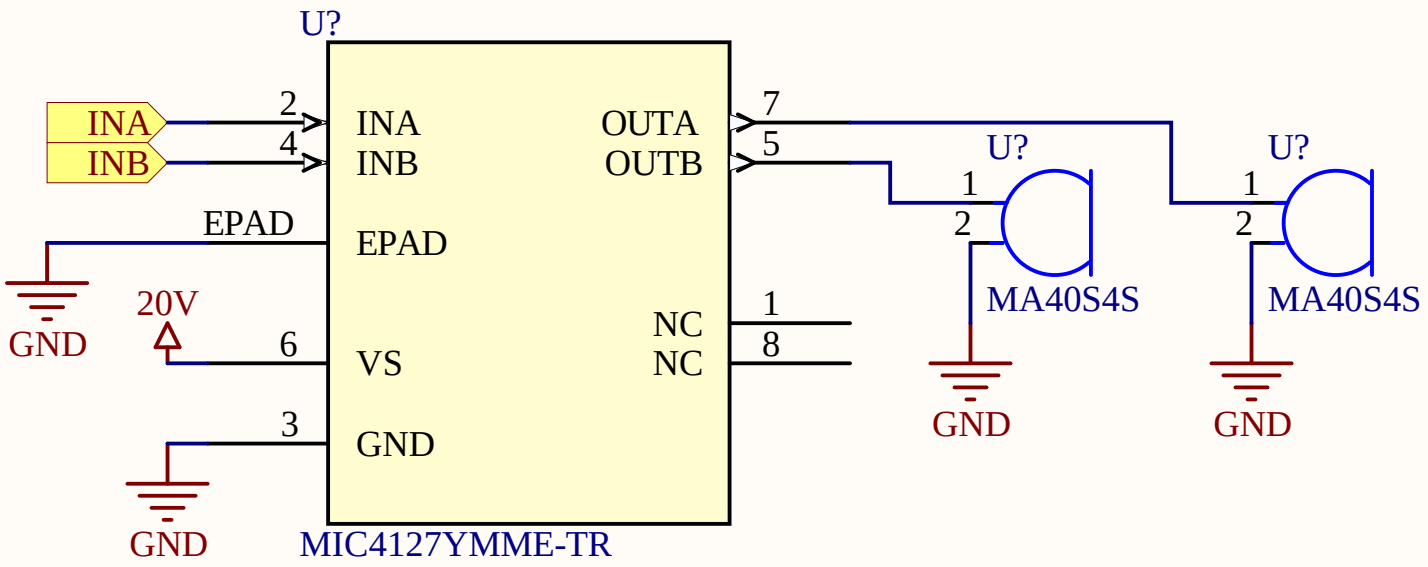

Title		
Size A4	Number	Revision
Date: 9/15/2022		Sheet of
File: C:\Users\..\Transmitter.SchDoc		Drawn By: