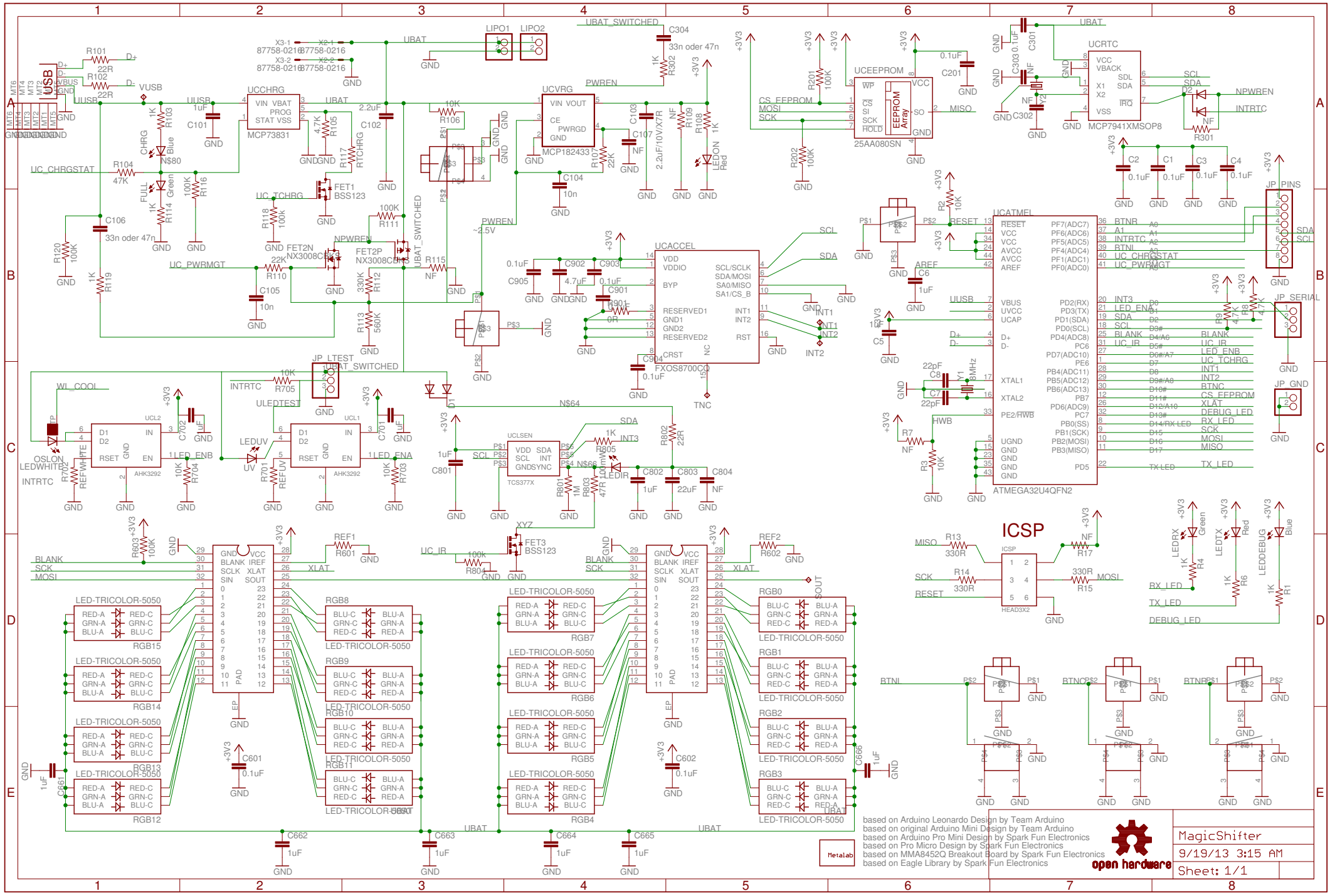
UCCHRG
MCP73831
UCVRG
MCP182433
UCEEPROM
25AA080SN
UCRTC
MCP7941XMSOP8
UCACCEL
FXOS8700CQ
UCATMEL
ATMEGA32U4QFN2
ICSP
HEAD3X2
JP_PINS
JP_SERIAL
JP_GND
JP_LTEST
LED-TRICOLOR-5050
RGB0
RGB1
RGB2
RGB3
RGB4
RGB5
RGB6
RGB7
RGB8
RGB9
RGB10
RGB11
RGB12
RGB13
RGB14
RGB15
UBAT
UBAT_SWITCHED
PWREN
UC_CHRGSTAT
UC_TCHRG
UC_PWRMGT
UC_IR
BLANK
SCK
MOSI
XLAT
SOUT
SCL
SDA
INT1
INT2
INT3
RX_LED
TX_LED
DEBUG_LED
LED_ENB
LED_ENA
based on Arduino Leonardo Design by Team Arduino
based on original Arduino Mini Design by Team Arduino
based on Arduino Pro Mini Design by Spark Fun Electronics
based on Pro Micro Design by Spark Fun Electronics
based on MMA8452Q Breakout Board by Spark Fun Electronics
based on Eagle Library by Spark Fun Electronics
open hardware
MagicShifter
9/19/13 3:15 AM
Sheet: 1/1