DIB isolators, EEPROM, ADC, MCU

File: DIB_EEPROM_ADC_MCU.kicad_sch

DAC, OE, Vref, IOEXP, Temp

File: DAC_Vref_IOEXP_Temp.kicad_sch

Power pre-regulator

File: Power_pre-regulator.kicad_sch

Bias power

File: Bias_power.kicad_sch

Post-regulator

File: Post-regulator.kicad_sch

Rsense protection, power output, Rprog

File: Rsense_protection_power_output.kicad_sch

Mode detection, OVP

File: CC_CV_OVP.kicad_sch

KK1
PCB-MB-01

KK2
PCB-MB-01

https://www.envox.eu
Power module with SMPS pre-regulator, remote sense & programming
Licensed under the TAPR Open Hardware License (www.tapr.org/OHL)
Envox d.o.o.

Sheet: /
File: EEZ DIB DCP405plus.kicad_sch

Title: EEZ DIB DCP405+ power module

Size: A4	Date: 2025-10-23	**Rev: r4B2**
KiCad E.D.A. 9.0.5		Id: 1/8

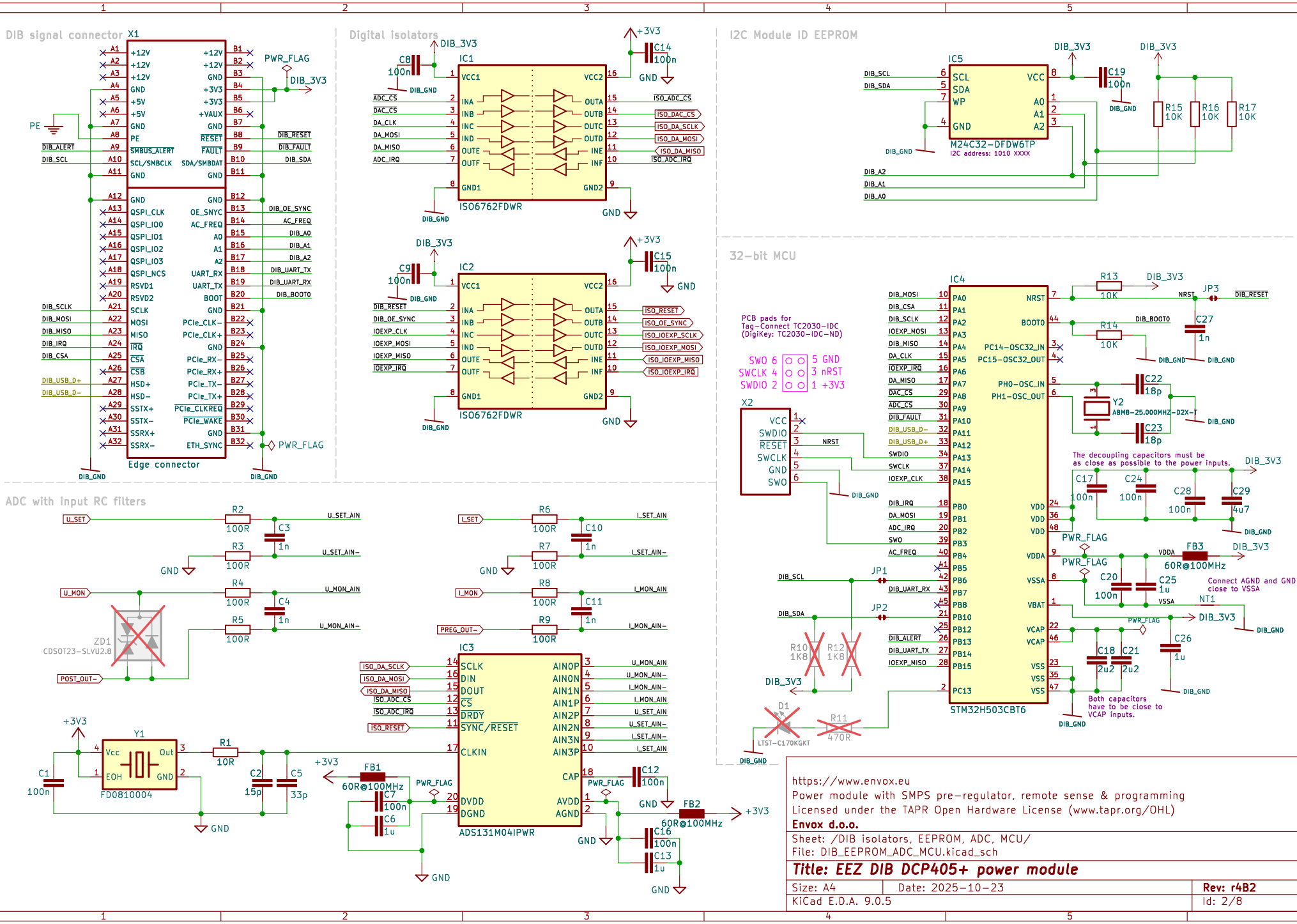
DIB signal connector X1
Edge connector
Digital isolators
IC1
IC2
ISO6762FDWR
I2C Module ID EEPROM
IC5
M24C32-DFDW6TP
I2C address: 1010 XXXX
32-bit MCU
IC4
STM32H503CBT6
PCB pads for Tag-Connect TC2030-IDC (DigiKey: TC2030-IDC-ND)
X2
ADC with input RC filters
IC3
ADS131M04IPWR
Y1
FD0810004
ZD1
CDSOT23-SLVU2.8
D1
LTST-C170KGKT
Y2
ABM8-25.000MHZ-D2X-T
https://www.envox.eu
Power module with SMPS pre-regulator, remote sense & programming
Licensed under the TAPR Open Hardware License (www.tapr.org/OHL)
Envox d.o.o.
Sheet: /DIB isolators, EEPROM, ADC, MCU/
File: DIB_EEPROM_ADC_MCU.kicad_sch
Title: EEZ DIB DCP405+ power module
Size: A4
Date: 2025-10-23
Rev: r4B2
KiCad E.D.A. 9.0.5
Id: 2/8

16-bit DAC (set voltage and current)

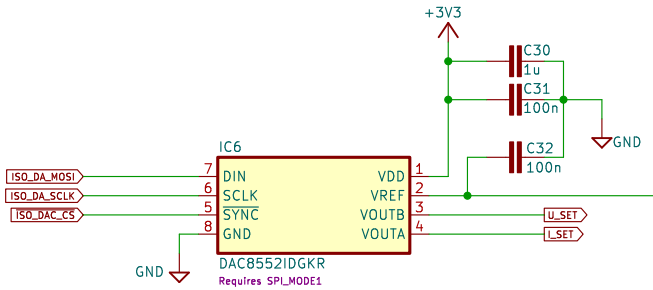

Voltage reference

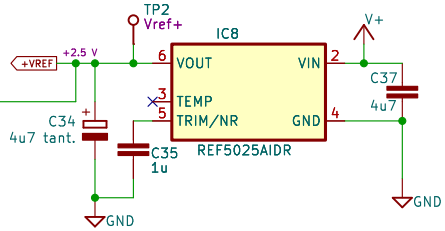

SPI 22-bit I/O Expander

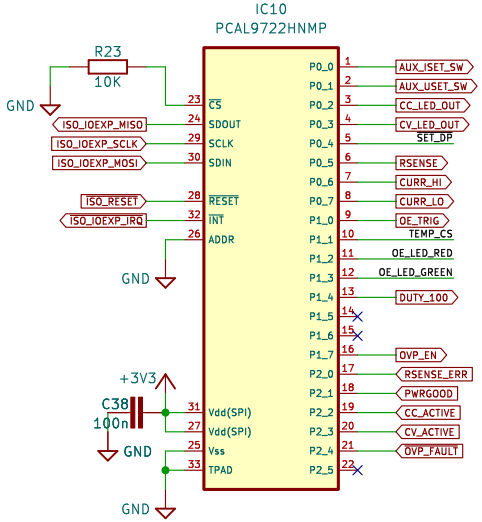

Output enable (OE)

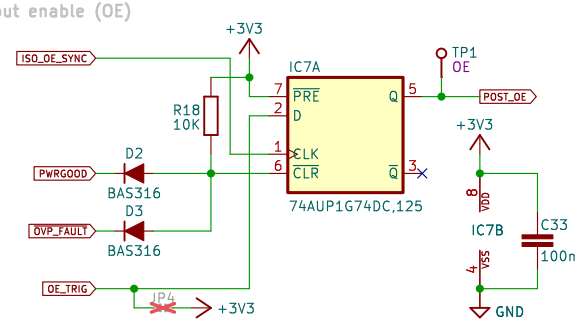

Down-programmer

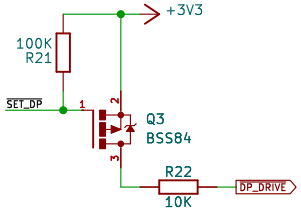

OE indicator

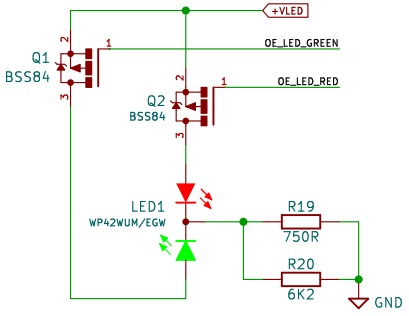

SPI Temperature sensor

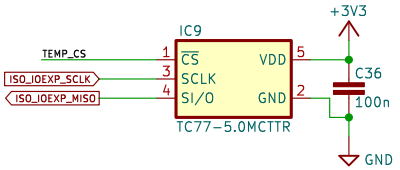

https://www.envox.eu
Power module with SMPS pre-regulator, remote sense & programming
Licensed under the TAPR Open Hardware License (www.tapr.org/OHL)
Envox d.o.o.

Sheet: /DAC, OE, Vref, IOEXP, Temp/
File: DAC_Vref_IOEXP_Temp.kicad_sch

Title: EEZ DIB DCP405+ power module

Size: A4	Date: 2025-10-23	**Rev: r4B2**
KiCad E.D.A. 9.0.5		Id: 3/8

Bias power supply

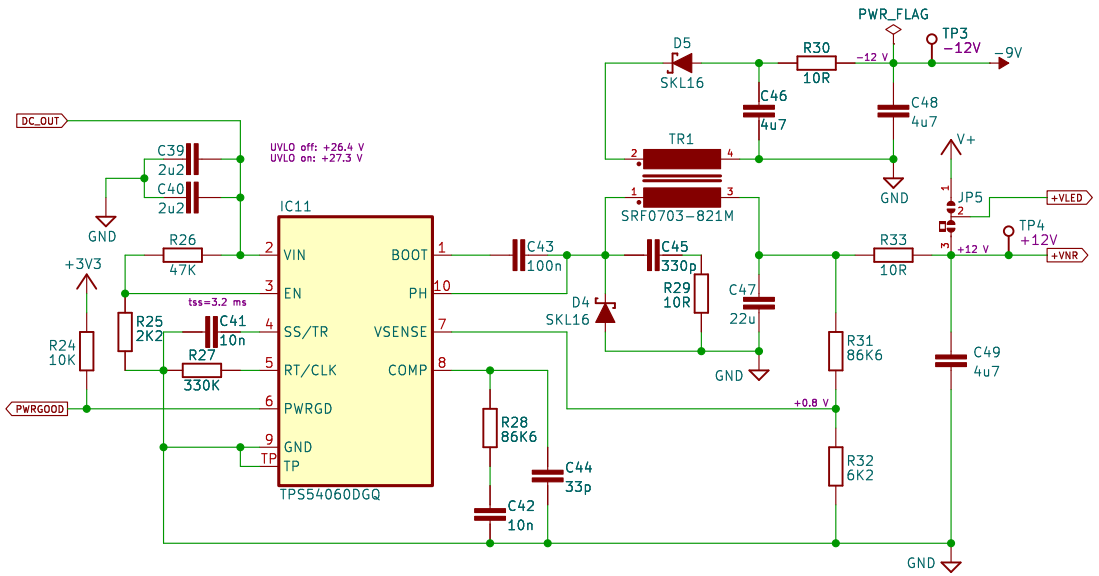

+5V LDO

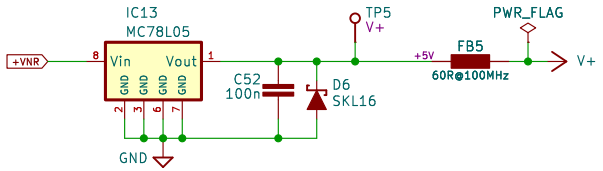

−5V LDO

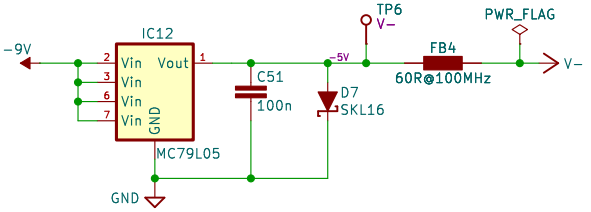

+3V3 LDO

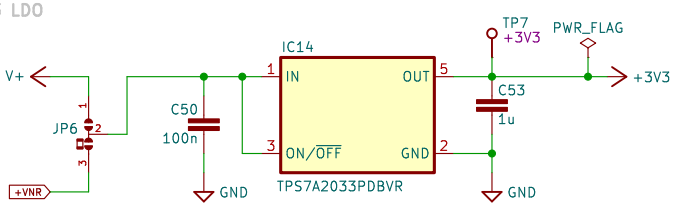

https://www.envox.eu
Power module with SMPS pre−regulator, remote sense & programming
Licensed under the TAPR Open Hardware License (www.tapr.org/OHL)
Envox d.o.o.

Sheet: /Bias power/
File: Bias_power.kicad_sch

Title: EEZ DIB DCP405+ power module

Size: A4	Date: 2025−10−23	**Rev: r4B2**
KiCad E.D.A. 9.0.5		Id: 3/8

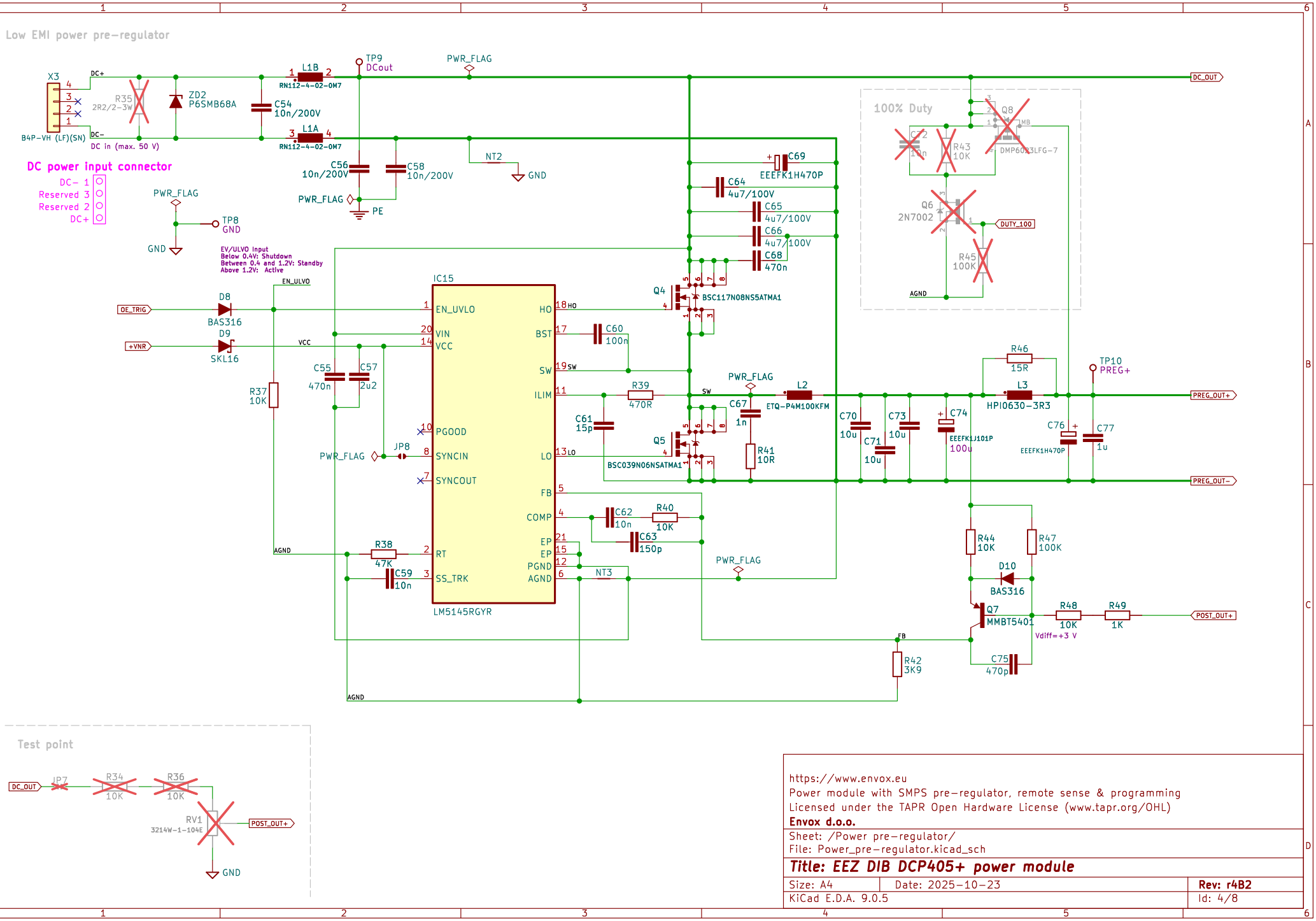
Low EMI power pre-regulator
DC power input connector
DC- 1
Reserved 3
Reserved 2
DC+
B4P-VH (LF)(SN)
DC in (max. 50 V)
X3
R35
2R2/2-3W
ZD2
P6SMB68A
C54
10n/200V
L1B
L1A
RN112-4-02-0M7
TP9
DCout
PWR_FLAG
C56
10n/200V
C58
10n/200V
PE
NT2
GND
TP8
EN/ULVO Input
Below 0.4V: Shutdown
Between 0.4 and 1.2V: Standby
Above 1.2V: Active
D8
BAS316
D9
SKL16
OE_TRIG
+VNR
EN_ULVO
VCC
R37
10K
C55
470n
C57
2u2
IC15
EN_UVLO
VIN
VCC
PGOOD
SYNCIN
SYNCOUT
RT
SS_TRK
HO
BST
SW
ILIM
LO
FB
COMP
EP
PGND
AGND
LM5145RGYR
JP8
R38
47K
C59
10n
C60
100n
R39
470R
C61
15p
C62
10n
R40
10K
C63
150p
NT3
Q4
BSC117N08NS5ATMA1
Q5
BSC039N06NSATMA1
C64
4u7/100V
C65
4u7/100V
C66
4u7/100V
C68
470n
C69
EEEFK1H470P
C67
1n
L2
ETQ-P4M100KFM
R41
10R
R42
3K9
100% Duty
Q8
DMP6023LFG-7
R43
10K
Q6
2N7002
R45
100K
DUTY_100
AGND
R46
15R
L3
HPI0630-3R3
TP10
PREG+
C70
10u
C71
10u
C73
10u
C74
EEEFK1J101P
100u
C76
EEEFK1H470P
C77
1u
R44
10K
R47
100K
D10
BAS316
Q7
MMBT5401
R48
10K
R49
1K
Vdiff=+3 V
C75
470p
DC_OUT
PREG_OUT+
PREG_OUT-
POST_OUT+
Test point
JP7
R34
10K
R36
10K
RV1
3214W-1-104E
https://www.envox.eu
Power module with SMPS pre-regulator, remote sense & programming
Licensed under the TAPR Open Hardware License (www.tapr.org/OHL)
Envox d.o.o.
Sheet: /Power pre-regulator/
File: Power_pre-regulator.kicad_sch
Title: EEZ DIB DCP405+ power module
Size: A4
Date: 2025-10-23
Rev: r4B2
KiCad E.D.A. 9.0.5
Id: 4/8

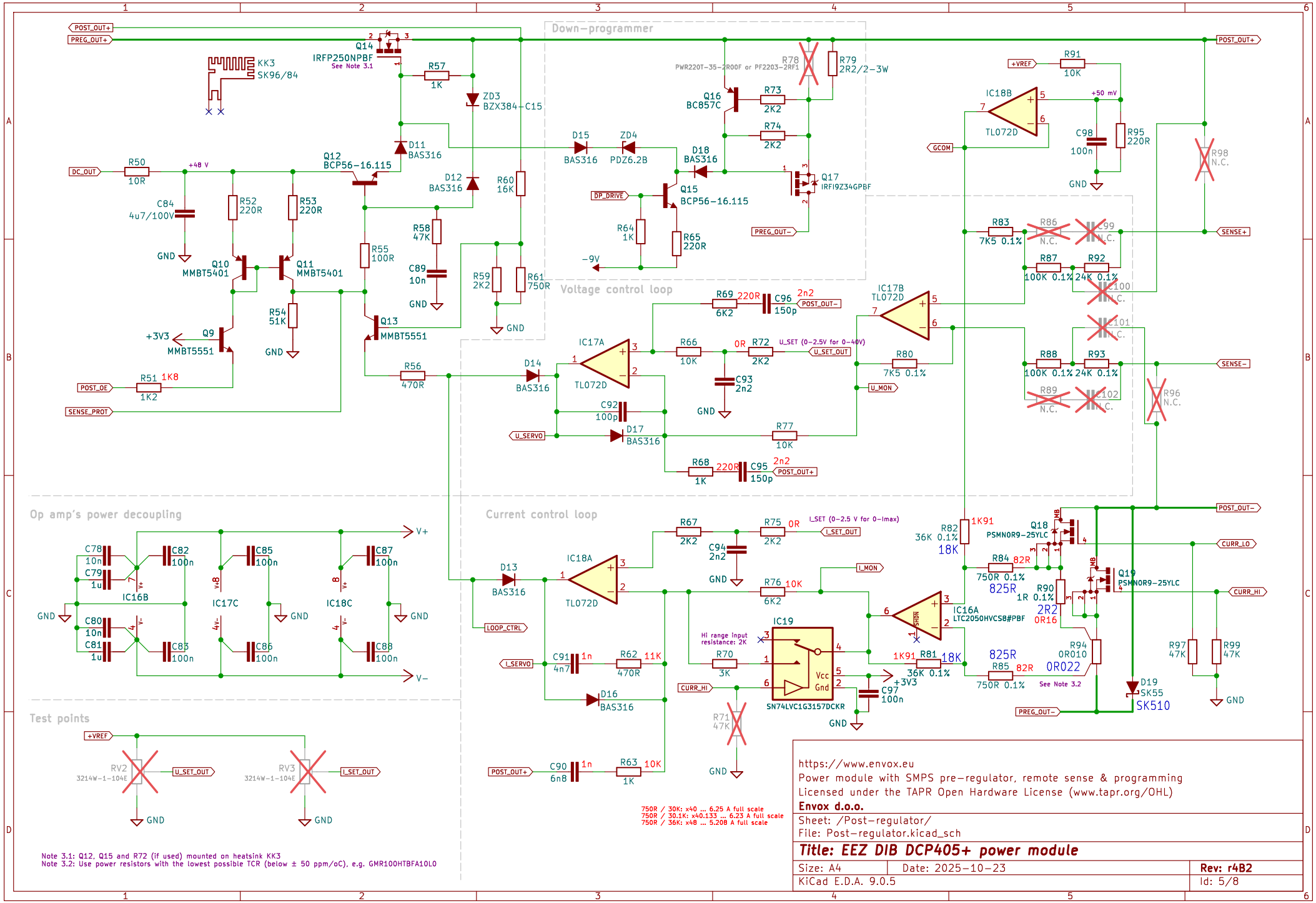
Down-programmer
Voltage control loop
Current control loop
Op amp's power decoupling
Test points
POST_OUT+
PREG_OUT+
DC_OUT
+48 V
GND
+3V3
POST_OE
SENSE_PROT
KK3
SK96/84
Q14
IRFP250NPBF
See Note 3.1
R57
1K
ZD3
BZX384-C15
D11
BAS316
Q12
BCP56-16.115
D12
BAS316
R60
16K
R50
10R
C84
4u7/100V
R52
220R
R53
220R
Q10
MMBT5401
Q11
MMBT5401
R54
51K
Q9
MMBT5551
R51
1K8
1K2
R55
100R
R58
47K
C89
10n
R59
2K2
R61
750R
Q13
MMBT5551
R56
470R
D15
BAS316
ZD4
PDZ6.2B
D18
BAS316
Q15
BCP56-16.115
DP_DRIVE
R64
1K
R65
220R
-9V
PWR220T-35-2R00F or PF2203-2RF1
R78
R79
2R2/2-3W
Q16
BC857C
R73
2K2
R74
2K2
Q17
IRFI9Z34GPBF
PREG_OUT-
R69
220R
6K2
C96
2n2
150p
POST_OUT-
IC17A
TL072D
D14
BAS316
R66
10K
0R
R72
2K2
U_SET (0-2.5V for 0-40V)
U_SET_OUT
C93
2n2
C92
100p
U_SERVO
D17
BAS316
R77
10K
R68
220R
1K
C95
2n2
150p
POST_OUT+
IC17B
TL072D
R80
7K5 0.1%
U_MON
+VREF
R91
10K
IC18B
TL072D
+50 mV
GCOM
C98
100n
R95
220R
R98
N.C.
R83
7K5 0.1%
R86
N.C.
C99
N.C.
SENSE+
R87
100K 0.1%
R92
24K 0.1%
C100
N.C.
C101
N.C.
R88
100K 0.1%
R93
24K 0.1%
SENSE-
R89
N.C.
C102
N.C.
R96
N.C.
C78
10n
C79
1u
C82
100n
C85
100n
C87
100n
IC16B
IC17C
IC18C
C80
10n
C81
1u
C83
100n
C86
100n
C88
100n
V+
V-
R67
2K2
R75
0R
I_SET (0-2.5 V for 0-Imax)
I_SET_OUT
C94
2n2
D13
BAS316
IC18A
TL072D
R76
10K
6K2
I_MON
LOOP_CTRL
I_SERVO
C91
4n7
1n
R62
11K
470R
D16
BAS316
Hi range input resistance: 2K
IC19
R70
3K
Vcc
Gnd
SN74LVC1G3157DCKR
CURR_HI
R71
47K
C97
100n
+3V3
POST_OUT+
C90
6n8
1n
R63
10K
1K
R82
36K 0.1%
1K91
18K
Q18
PSMN0R9-25YLC
R84
82R
750R 0.1%
825R
R90
1R 0.1%
2R2
0R16
Q19
PSMN0R9-25YLC
IC16A
LTC2050HVCS8#PBF
SHDN
R81
36K 0.1%
1K91
18K
825R
R85
82R
750R 0.1%
R94
0R010
0R022
See Note 3.2
D19
SK55
SK510
PREG_OUT-
POST_OUT-
CURR_LO
CURR_HI
R97
47K
R99
47K
750R / 30K: x40 ... 6.25 A full scale
750R / 30.1K: x40.133 ... 6.23 A full scale
750R / 36K: x48 ... 5.208 A full scale
RV2
3214W-1-104E
RV3
3214W-1-104E
U_SET_OUT
I_SET_OUT
Note 3.1: Q12, Q15 and R72 (if used) mounted on heatsink KK3
Note 3.2: Use power resistors with the lowest possible TCR (below ± 50 ppm/oC), e.g. GMR100HTBFA10L0
https://www.envox.eu
Power module with SMPS pre-regulator, remote sense & programming
Licensed under the TAPR Open Hardware License (www.tapr.org/OHL)
Envox d.o.o.
Sheet: /Post-regulator/
File: Post-regulator.kicad_sch
Title: EEZ DIB DCP405+ power module
Size: A4
Date: 2025-10-23
Rev: r4B2
KiCad E.D.A. 9.0.5
Id: 5/8

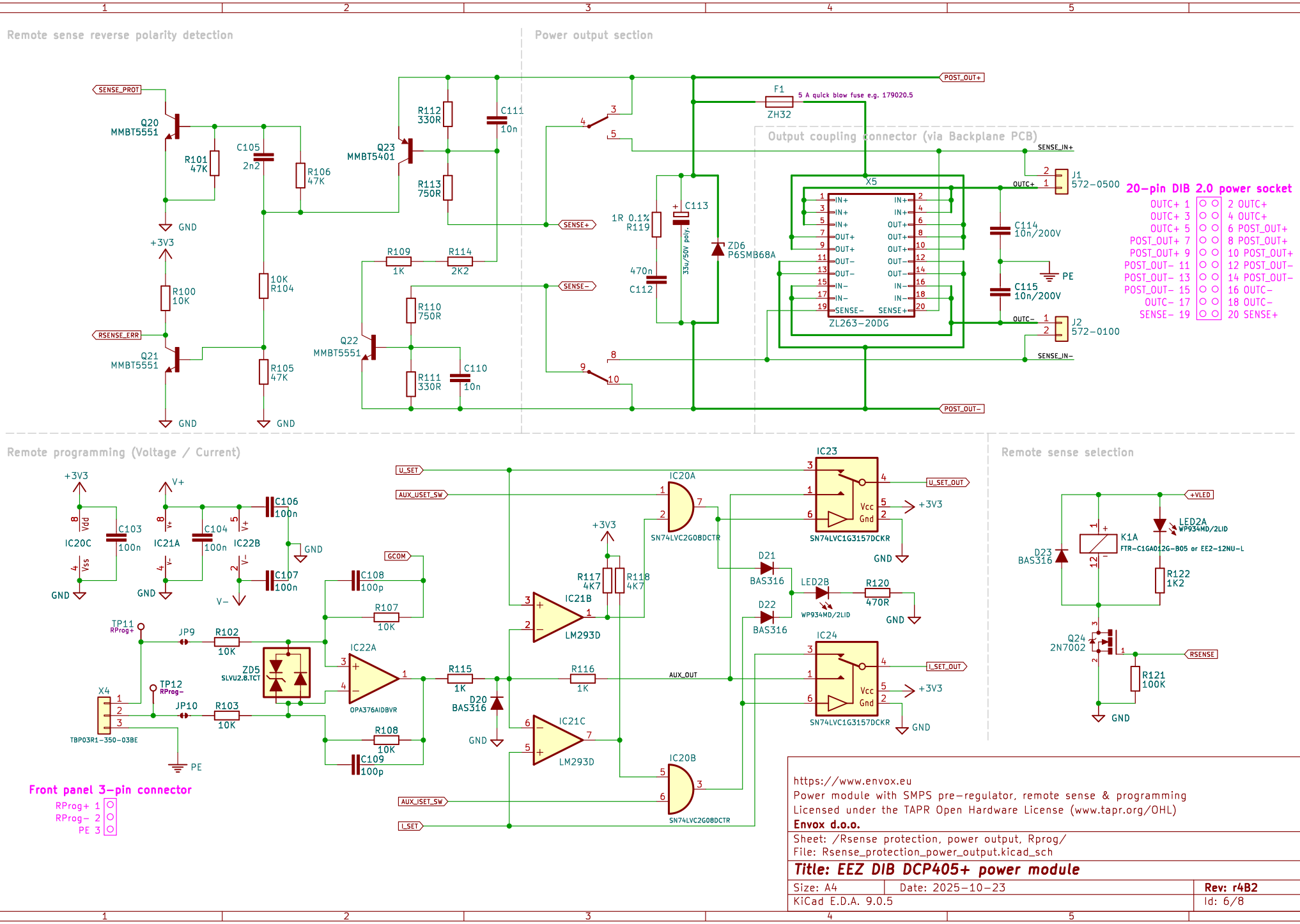
Remote sense reverse polarity detection
Power output section
Output coupling connector (via Backplane PCB)
Remote programming (Voltage / Current)
Remote sense selection
SENSE_PROT
Q20 MMBT5551
Q21 MMBT5551
Q22 MMBT5551
Q23 MMBT5401
R101 47K
R100 10K
R105 47K
R104 10K
R106 47K
C105 2n2
R112 330R
R113 750R
C111 10n
R109 1K
R114 2K2
R110 750R
R111 330R
C110 10n
RSENSE_ERR
+3V3
GND
SENSE+
SENSE−
F1 ZH32 5 A quick blow fuse e.g. 179020.5
POST_OUT+
POST_OUT−
R119 1R 0.1%
C112 470n
C113 33u/50V poly.
ZD6 P6SMB68A
X5 ZL263−20DG
C114 10n/200V
C115 10n/200V
PE
SENSE_IN+
SENSE_IN−
OUTC+
OUTC−
J1 572−0500
J2 572−0100
20−pin DIB 2.0 power socket
OUTC+ 1 2 OUTC+
OUTC+ 3 4 OUTC+
OUTC+ 5 6 POST_OUT+
POST_OUT+ 7 8 POST_OUT+
POST_OUT+ 9 10 POST_OUT+
POST_OUT− 11 12 POST_OUT−
POST_OUT− 13 14 POST_OUT−
POST_OUT− 15 16 OUTC−
OUTC− 17 18 OUTC−
SENSE− 19 20 SENSE+
IC20C
IC21A
IC22B
C103 100n
C104 100n
C106 100n
C107 100n
V+
V−
U_SET
AUX_USET_SW
AUX_ISET_SW
I_SET
IC20A SN74LVC2G08DCTR
IC20B SN74LVC2G08DCTR
IC21B LM293D
IC21C LM293D
IC22A OPA376AIDBVR
IC23 SN74LVC1G3157DCKR
IC24 SN74LVC1G3157DCKR
U_SET_OUT
I_SET_OUT
AUX_OUT
R117 4K7
R118 4K7
R115 1K
R116 1K
R107 10K
R108 10K
R102 10K
R103 10K
C108 100p
C109 100p
GCOM
ZD5 SLVU2.8.TCT
D20 BAS316
D21 BAS316
D22 BAS316
LED2B WP934MD/2LID
R120 470R
TP11 RProg+
TP12 RProg−
JP9
JP10
X4 TBP03R1−350−03BE
Front panel 3−pin connector
RProg+ 1
RProg− 2
PE 3
+VLED
LED2A WP934MD/2LID
K1A FTR−C1GA012G−B05 or EE2−12NU−L
D23 BAS316
R122 1K2
Q24 2N7002
R121 100K
RSENSE
https://www.envox.eu
Power module with SMPS pre−regulator, remote sense & programming
Licensed under the TAPR Open Hardware License (www.tapr.org/OHL)
Envox d.o.o.
Sheet: /Rsense protection, power output, Rprog/
File: Rsense_protection_power_output.kicad_sch
Title: EEZ DIB DCP405+ power module
Size: A4
Date: 2025−10−23
Rev: r4B2
KiCad E.D.A. 9.0.5
Id: 6/8

Constant Voltage (CV) and Constant Current (CC) mode detection and indication

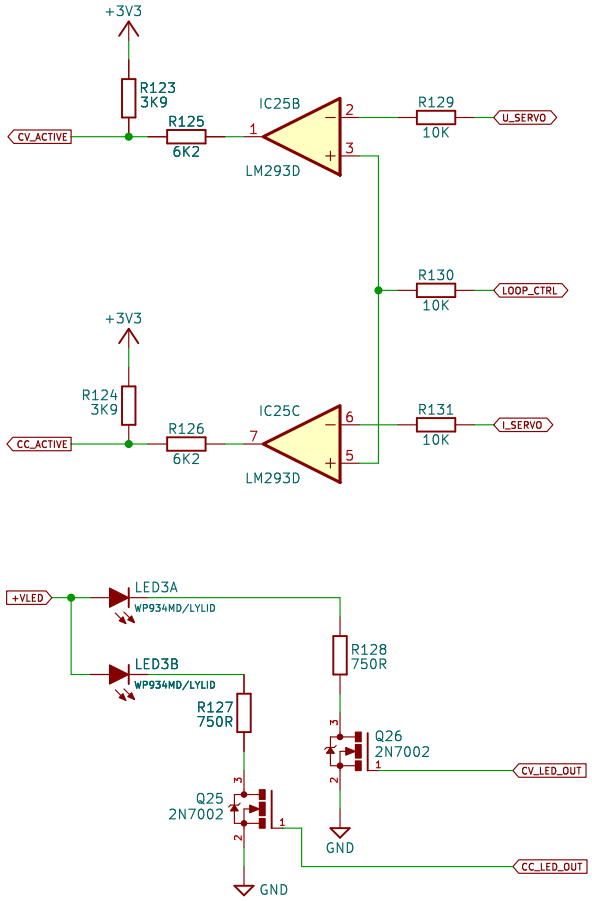

Over-voltage protection (OVP)

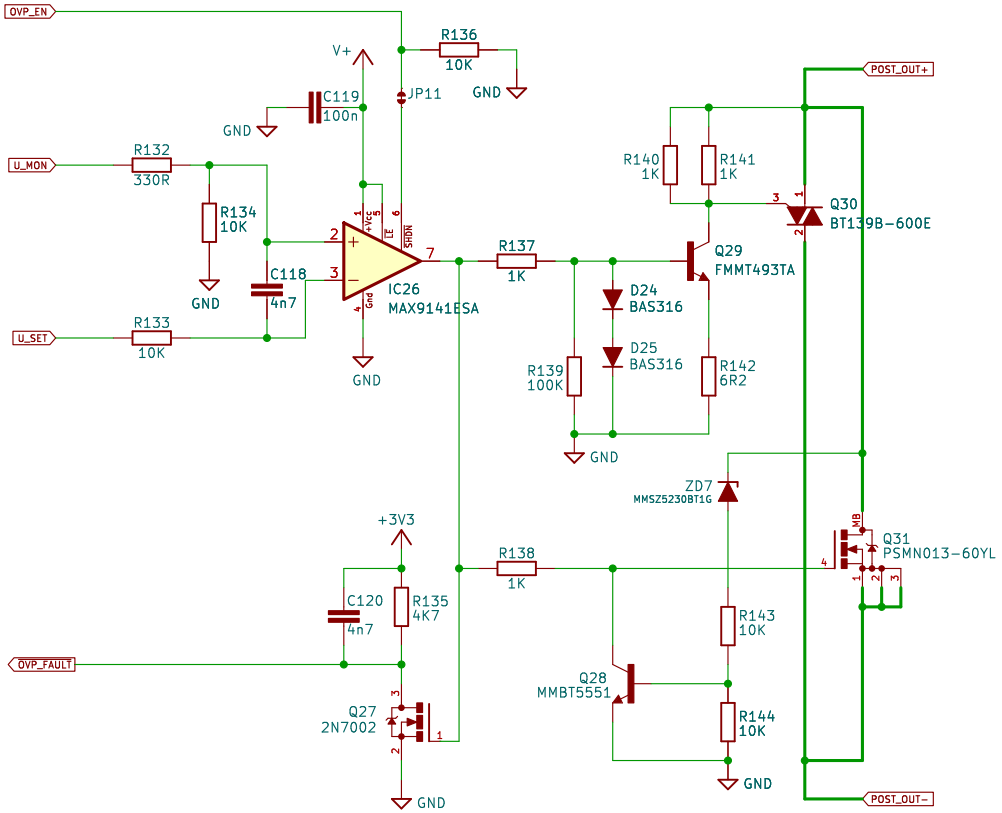

https://www.envox.eu
Power module with SMPS pre-regulator, remote sense & programming
Licensed under the TAPR Open Hardware License (www.tapr.org/OHL)
Envox d.o.o.

Sheet: /Mode detection, OVP/
File: CC_CV_OVP.kicad_sch

Title: EEZ DIB DCP405+ power module

Size: A4	Date: 2025-10-23	**Rev: r4B2**
KiCad E.D.A. 9.0.5		Id: 7/8