CM5 socket

File: cm5_socket_mcu.kicad_sch

STM32H7 MCU

File: STM32H7_MCU.kicad_sch

Ethernet PHY, PSRAM, SDcard

File: eth_psram_emmc.kicad_sch

DVID converter, NOR Flash

File: Ethernet_flash.kicad_sch

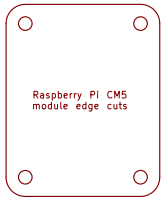

https://www.envox.eu
32-bit STM32 MCU module
Licensed under the TAPR Open Hardware License (www.tapr.org/OHL)
Envox d.o.o.

Sheet: /
File: BB3plus CM5 STM32H7 module.kicad_sch

Title: EEZ BB3+ STM32H7 CM5 module

Size: A4	Date: 2026-05-01	**Rev: r1B5**
KiCad E.D.A. 10.0.1		Id: 1/5

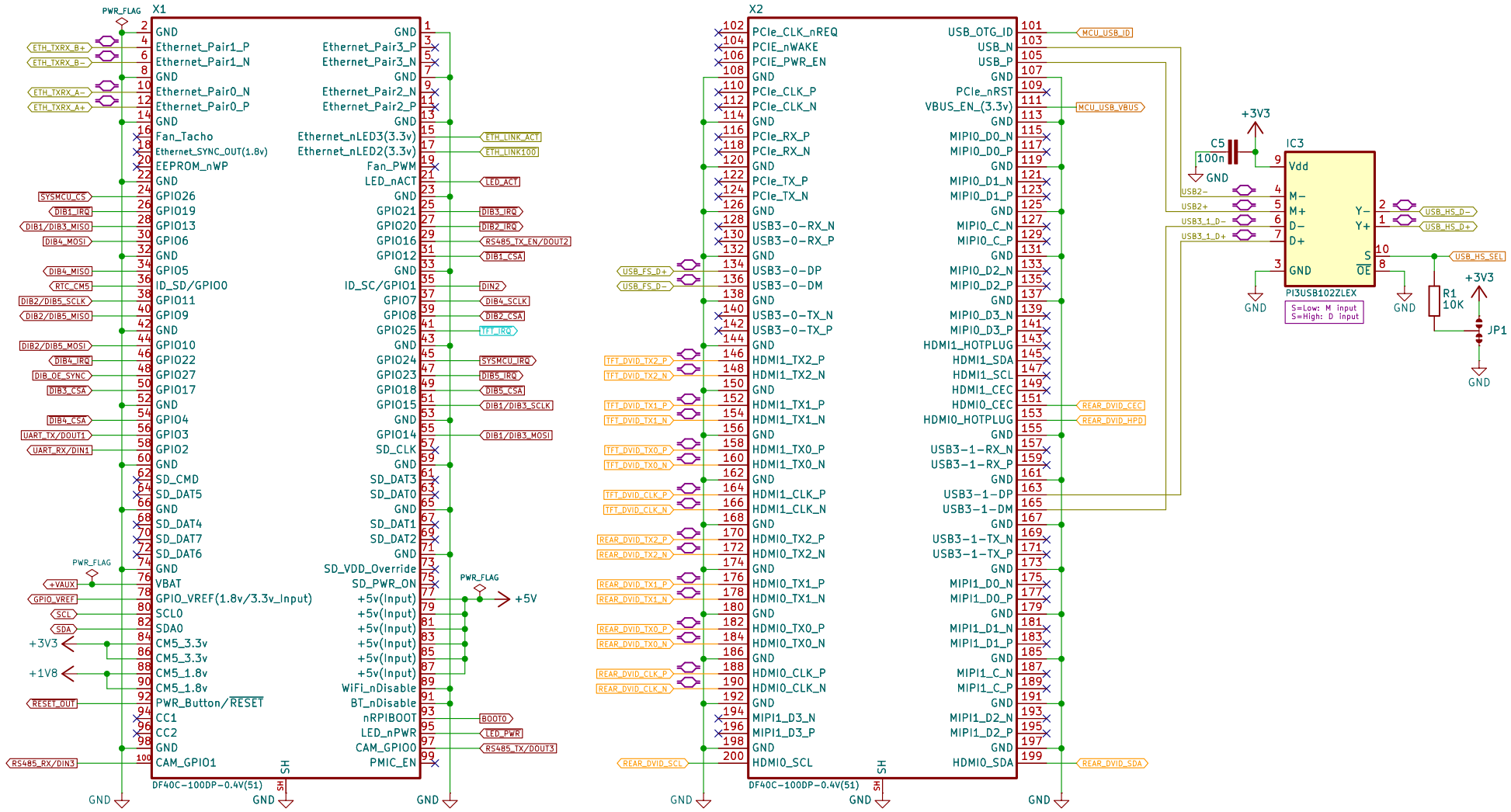
X1
DF40C-100DP-0.4V(51)
GND
Ethernet_Pair1_P
Ethernet_Pair1_N
Ethernet_Pair0_N
Ethernet_Pair0_P
Fan_Tacho
Ethernet_SYNC_OUT(1.8v)
EEPROM_nWP
GPIO26
GPIO19
GPIO13
GPIO6
GPIO5
ID_SD/GPIO0
GPIO11
GPIO9
GPIO10
GPIO22
GPIO27
GPIO17
GPIO4
GPIO3
GPIO2
SD_CMD
SD_DAT5
SD_DAT4
SD_DAT7
SD_DAT6
VBAT
GPIO_VREF(1.8v/3.3v_Input)
SCL0
SDA0
CM5_3.3v
CM5_1.8v
PWR_Button/RESET
CC1
CC2
CAM_GPIO1
Ethernet_Pair3_P
Ethernet_Pair3_N
Ethernet_Pair2_N
Ethernet_Pair2_P
Ethernet_nLED3(3.3v)
Ethernet_nLED2(3.3v)
Fan_PWM
LED_nACT
GPIO21
GPIO20
GPIO16
GPIO12
ID_SC/GPIO1
GPIO7
GPIO8
GPIO25
GPIO24
GPIO23
GPIO18
GPIO15
GPIO14
SD_CLK
SD_DAT3
SD_DAT0
SD_DAT1
SD_DAT2
SD_VDD_Override
SD_PWR_ON
+5v(Input)
WiFi_nDisable
BT_nDisable
nRPIBOOT
LED_nPWR
CAM_GPIO0
PMIC_EN
ETH_TXRX_B+
ETH_TXRX_B-
ETH_TXRX_A-
ETH_TXRX_A+
SYSMCU_CS
DIB1_IRQ
DIB1/DIB3_MISO
DIB4_MOSI
DIB4_MISO
RTC_CMS
DIB2/DIB5_SCLK
DIB2/DIB5_MISO
DIB2/DIB5_MOSI
DIB4_IRQ
DIB_OE_SYNC
DIB3_CSA
DIB4_CSA
UART_TX/DOUT1
UART_RX/DIN1
+VAUX
GPIO_VREF
SCL
SDA
+3V3
+1V8
RESET_OUT
RS485_RX/DIN3
ETH_LINK_ACT
ETH_LINK100
LED_ACT
DIB3_IRQ
DIB2_IRQ
RS485_TX_EN/DOUT2
DIB1_CSA
DIN2
DIB4_SCLK
DIB2_CSA
TFT_IRQ
SYSMCU_IRQ
DIB5_IRQ
DIB5_CSA
DIB1/DIB3_SCLK
DIB1/DIB3_MOSI
BOOT0
LED_PWR
RS485_TX/DOUT3
PWR_FLAG
+5V
X2
DF40C-100DP-0.4V(51)
PCIe_CLK_nREQ
PCIE_nWAKE
PCIE_PWR_EN
PCIe_CLK_P
PCIe_CLK_N
PCIe_RX_P
PCIe_RX_N
PCIe_TX_P
PCIe_TX_N
USB3-0-RX_N
USB3-0-RX_P
USB3-0-DP
USB3-0-DM
USB3-0-TX_N
USB3-0-TX_P
HDMI1_TX2_P
HDMI1_TX2_N
HDMI1_TX1_P
HDMI1_TX1_N
HDMI1_TX0_P
HDMI1_TX0_N
HDMI1_CLK_P
HDMI1_CLK_N
HDMI0_TX2_P
HDMI0_TX2_N
HDMI0_TX1_P
HDMI0_TX1_N
HDMI0_TX0_P
HDMI0_TX0_N
HDMI0_CLK_P
HDMI0_CLK_N
MIPI1_D3_N
MIPI1_D3_P
HDMI0_SCL
USB_OTG_ID
USB_N
USB_P
PCIe_nRST
VBUS_EN_(3.3v)
MIPI0_D0_N
MIPI0_D0_P
MIPI0_D1_N
MIPI0_D1_P
MIPI0_C_N
MIPI0_C_P
MIPI0_D2_N
MIPI0_D2_P
MIPI0_D3_N
MIPI0_D3_P
HDMI1_HOTPLUG
HDMI1_SDA
HDMI1_SCL
HDMI1_CEC
HDMI0_CEC
HDMI0_HOTPLUG
USB3-1-RX_N
USB3-1-RX_P
USB3-1-DP
USB3-1-DM
USB3-1-TX_N
USB3-1-TX_P
MIPI1_D0_N
MIPI1_D0_P
MIPI1_D1_N
MIPI1_D1_P
MIPI1_C_N
MIPI1_C_P
MIPI1_D2_N
MIPI1_D2_P
HDMI0_SDA
USB_FS_D+
USB_FS_D-
TFT_DVID_TX2_P
TFT_DVID_TX2_N
TFT_DVID_TX1_P
TFT_DVID_TX1_N
TFT_DVID_TX0_P
TFT_DVID_TX0_N
TFT_DVID_CLK_P
TFT_DVID_CLK_N
REAR_DVID_TX2_P
REAR_DVID_TX2_N
REAR_DVID_TX1_P
REAR_DVID_TX1_N
REAR_DVID_TX0_P
REAR_DVID_TX0_N
REAR_DVID_CLK_P
REAR_DVID_CLK_N
REAR_DVID_SCL
MCU_USB_ID
MCU_USB_VBUS
REAR_DVID_CEC
REAR_DVID_HPD
REAR_DVID_SDA
+3V3
C5
100n
IC3
PI3USB102ZLEX
Vdd
M-
M+
D-
D+
GND
Y-
Y+
S
OE
USB2-
USB2+
USB3_1_D-
USB3_1_D+
USB_HS_D-
USB_HS_D+
USB_HS_SEL
S=Low: M input
S=High: D input
R1
10K
JP1
+3V3 LDO (max 1A)
IC1
INPUT
OUTPUT
ADJ/GND
AZ1117CH2-3.3TRG1
+5V
C1
10u
C2
10u
+1V8 LDO (max 1A)
IC2
AZ1117CH-1.8TRG1
C3
1u
C4
10u
https://www.envox.eu
32-bit STM32 MCU module
Licensed under the TAPR Open Hardware License (www.tapr.org/OHL)
Envox d.o.o.
Sheet: /CM5 socket/
File: cm5_socket_mcu.kicad_sch
Title: EEZ BB3+ STM32H7 CM5 module
Size: A4
Date: 2026-05-01
Rev: r1B5
KiCad E.D.A. 10.0.1
Id: 1/5

32-bit dual core MCU

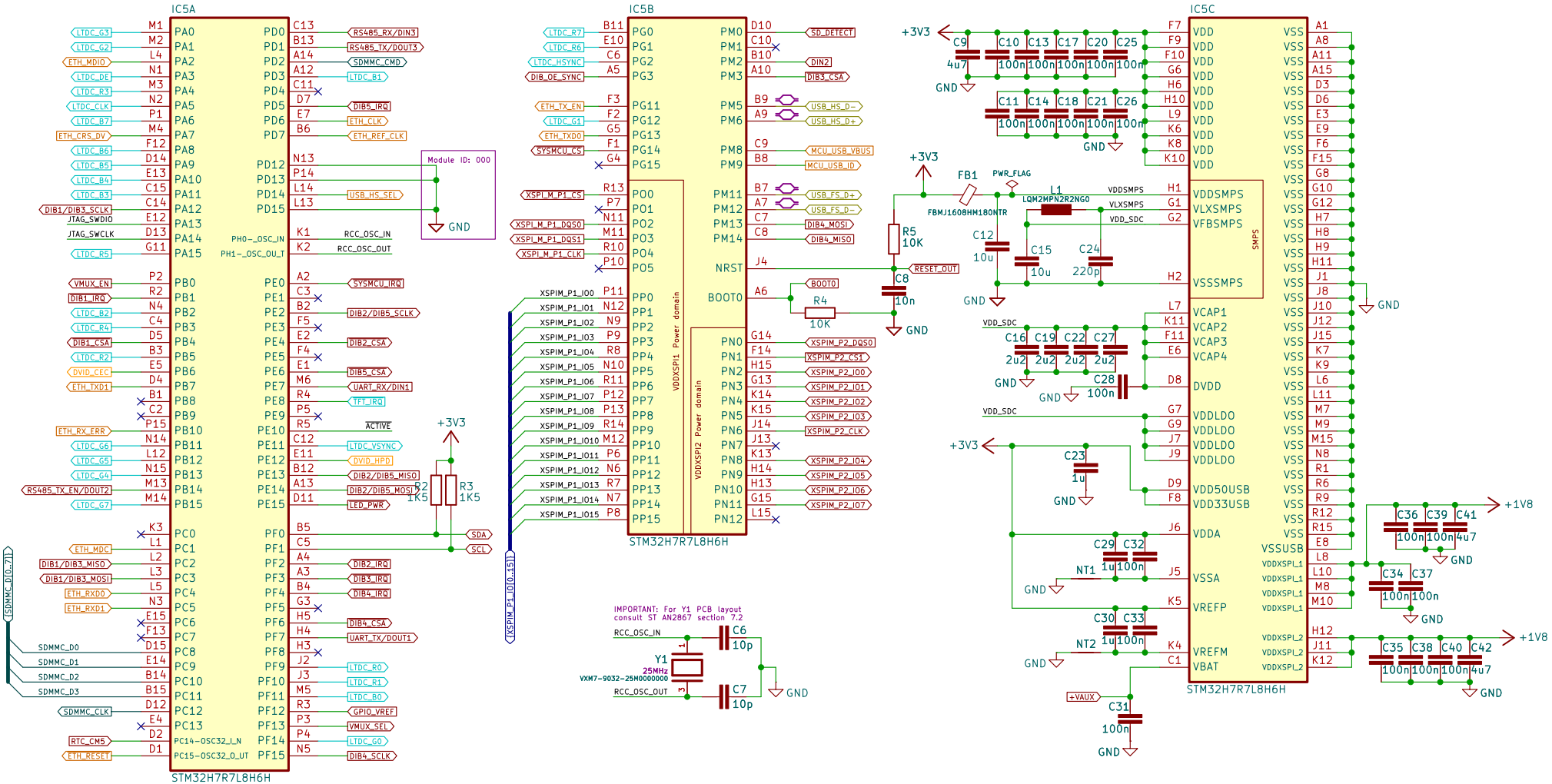

LED Active buffer

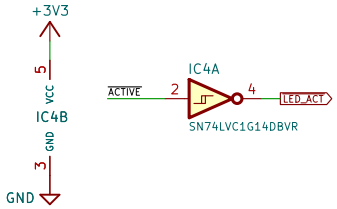

JTAG PCB connector

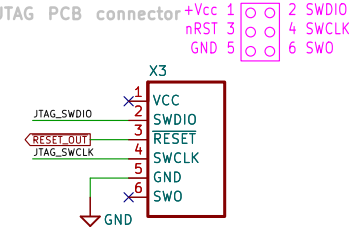

https://www.envox.eu
32-bit STM32 MCU module
Licensed under the TAPR Open Hardware License (www.tapr.org/OHL)
Envox d.o.o.

Sheet: /STM32H7 MCU/
File: STM32H7_MCU.kicad_sch

Title: EEZ BB3+ STM32H7 CM5 module

Size: A4	Date: 2026-05-01	**Rev: r1B5**
KiCad E.D.A. 10.0.1		Id: 2/5

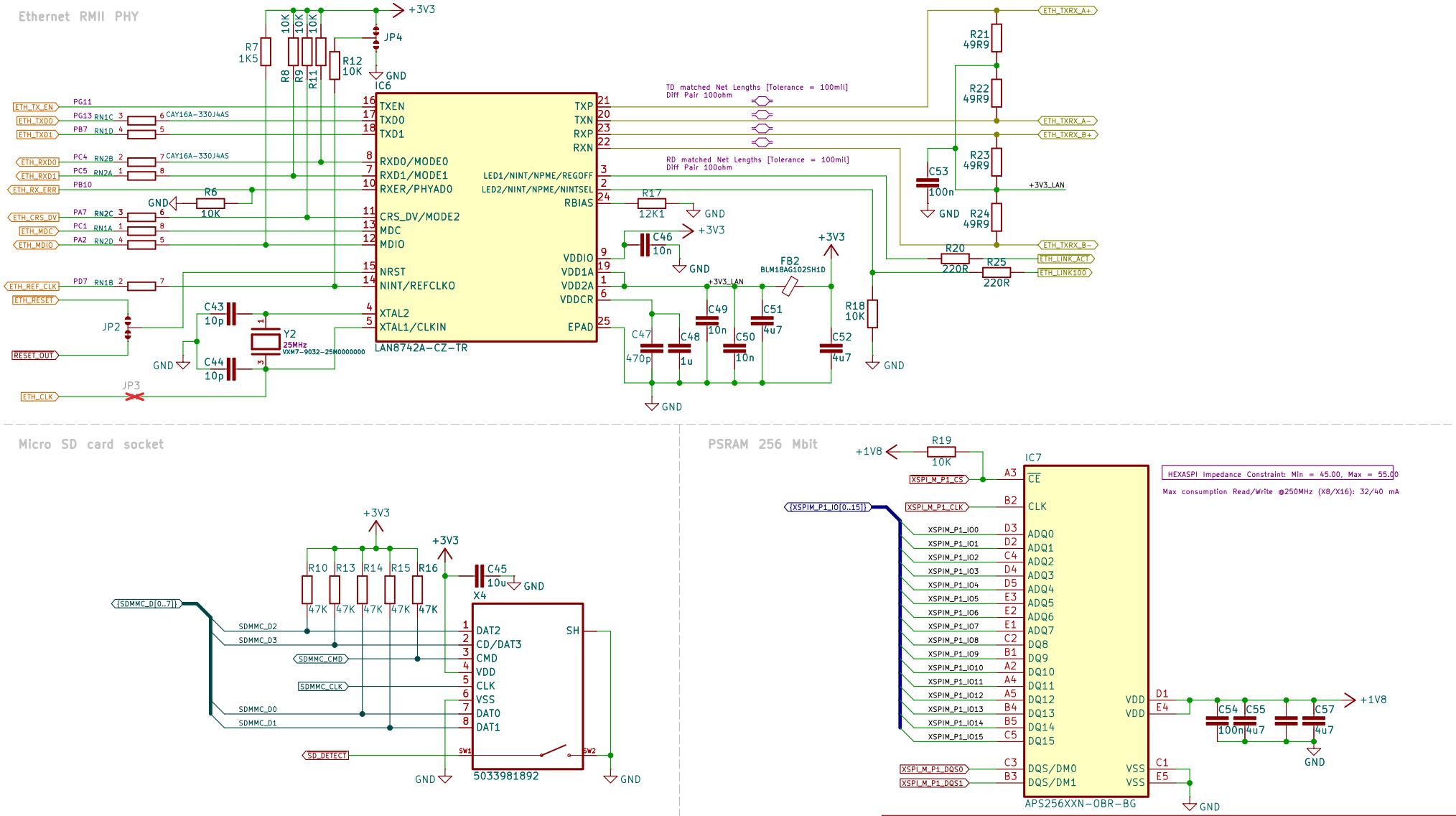

https://www.envox.eu
32-bit STM32 MCU module
Licensed under the TAPR Open Hardware License (www.tapr.org/OHL)
Envox d.o.o.

Sheet: /Ethernet PHY, PSRAM, SDcard/
File: eth_psram_emmc.kicad_sch

Title: EEZ BB3+ STM32H7 CM5 module

Size: A4	Date: 2026-05-01	**Rev: r1B5**
KiCad E.D.A. 10.0.1		Id: 3/5

RGB-to-DVID converter

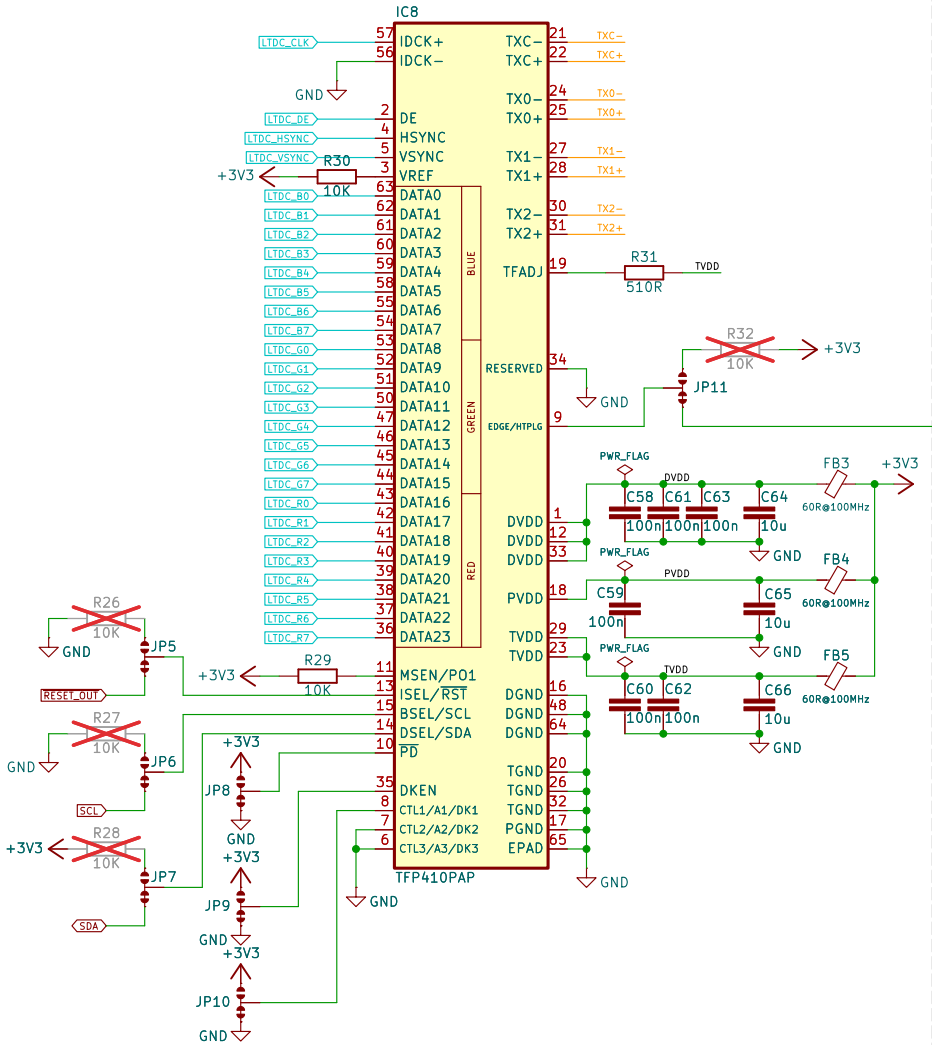

Video MUX 1:2

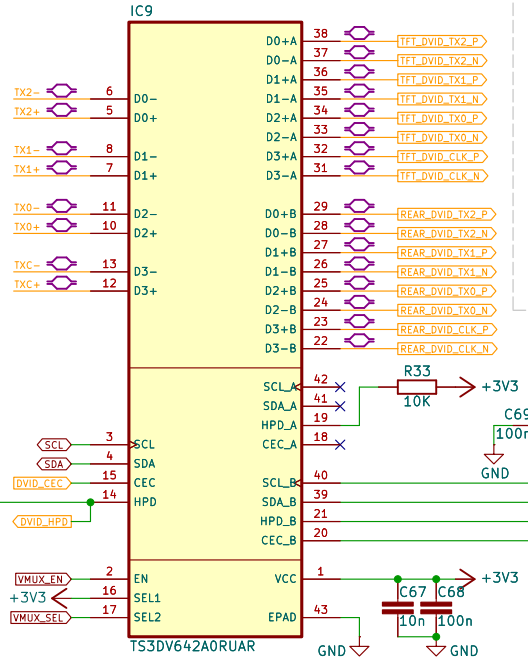

Table 8-1. Functional Table

EN	SEL1	SEL2	FUNCTION
L	X	X	Switch disabled. All channels are Hi-Z.
H	L	L	Channel D0+/D0− to D0+A/D0−A is ON. All the other channels (D1+/D1−, D2+/D2−, D3+/D3−, SCL, SDA, HPD, CEC) are Hi-Z.
H	L	H	Channel D0+/D0− to D0+B/D0−B is ON. All the other channels (D1+/D1−, D2+/D2−, D3+/D3−, SCL, SDA, HPD, CEC) are Hi-Z.
H	H	L	All A channels are enabled. All B channels are Hi-Z.
H	H	H	All B channels are enabled. All A channels are Hi-Z.

NOR flash memory 256 Mbit (32 MB x 8, 200 MHz)

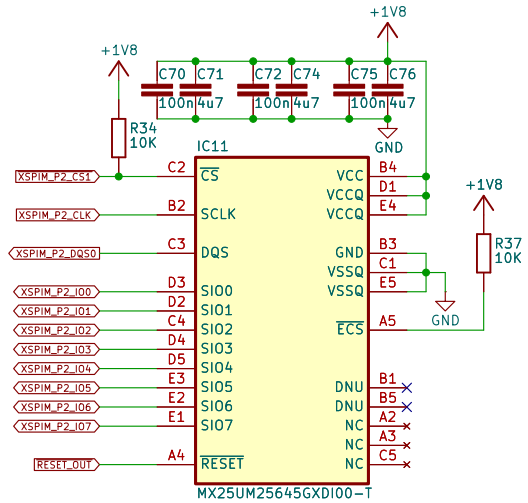

Consumption (VCC Read), 200 MHz 8IO DTR (SIO floating): Typ. 55 mA, Max. 80 mA

OCTOSPI Impedance Constraint: Min = 45.00, Max = 55.00

DQS0 with IO0..7 (Byte0), and CLK, all in 50 mils
NCS length can be in the range of up to CLK length +/− 750 mils

https://www.envox.eu
32-bit STM32 MCU module
Licensed under the TAPR Open Hardware License (www.tapr.org/OHL)
Envox d.o.o.

Sheet: /DVID converter, NOR Flash/
File: Ethernet_flash.kicad_sch

Title: EEZ BB3+ STM32H7 CM5 module

Size: A4	Date: 2026-05-01	Rev: r1B5
KiCad E.D.A. 10.0.1		Id: 4/5