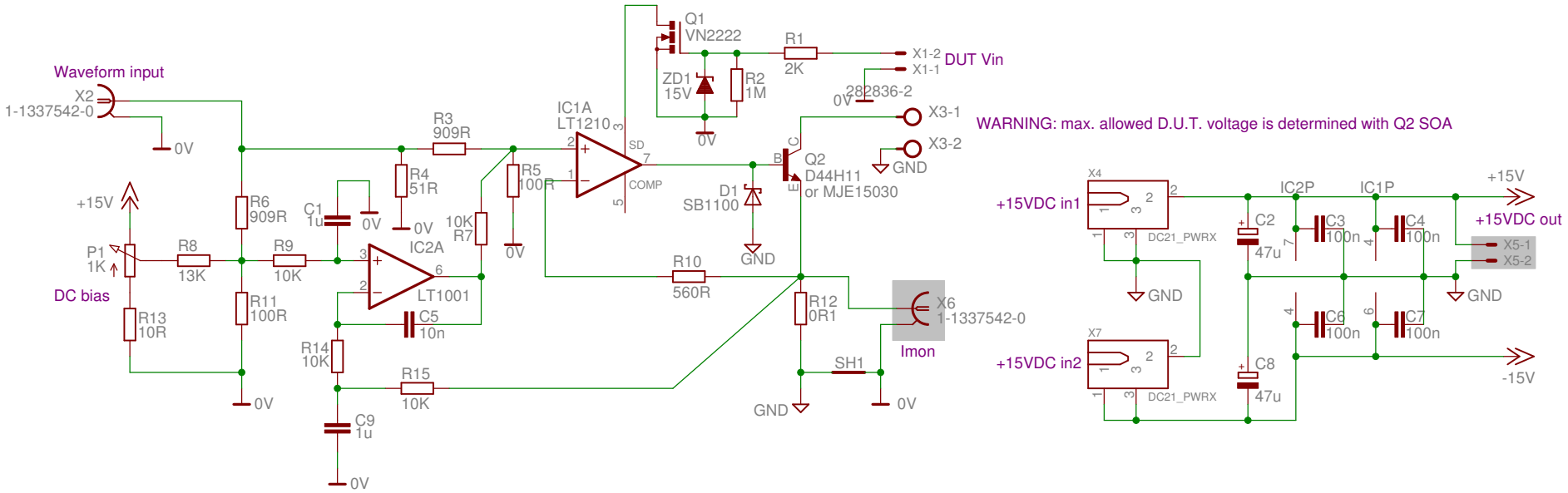

TITLE: Transient tester (DC supply) r2B1

Document Number:

REV:

Date: 16. 01. 2016. 11:59

Sheet: 1/1