FS-1
RECEIVE

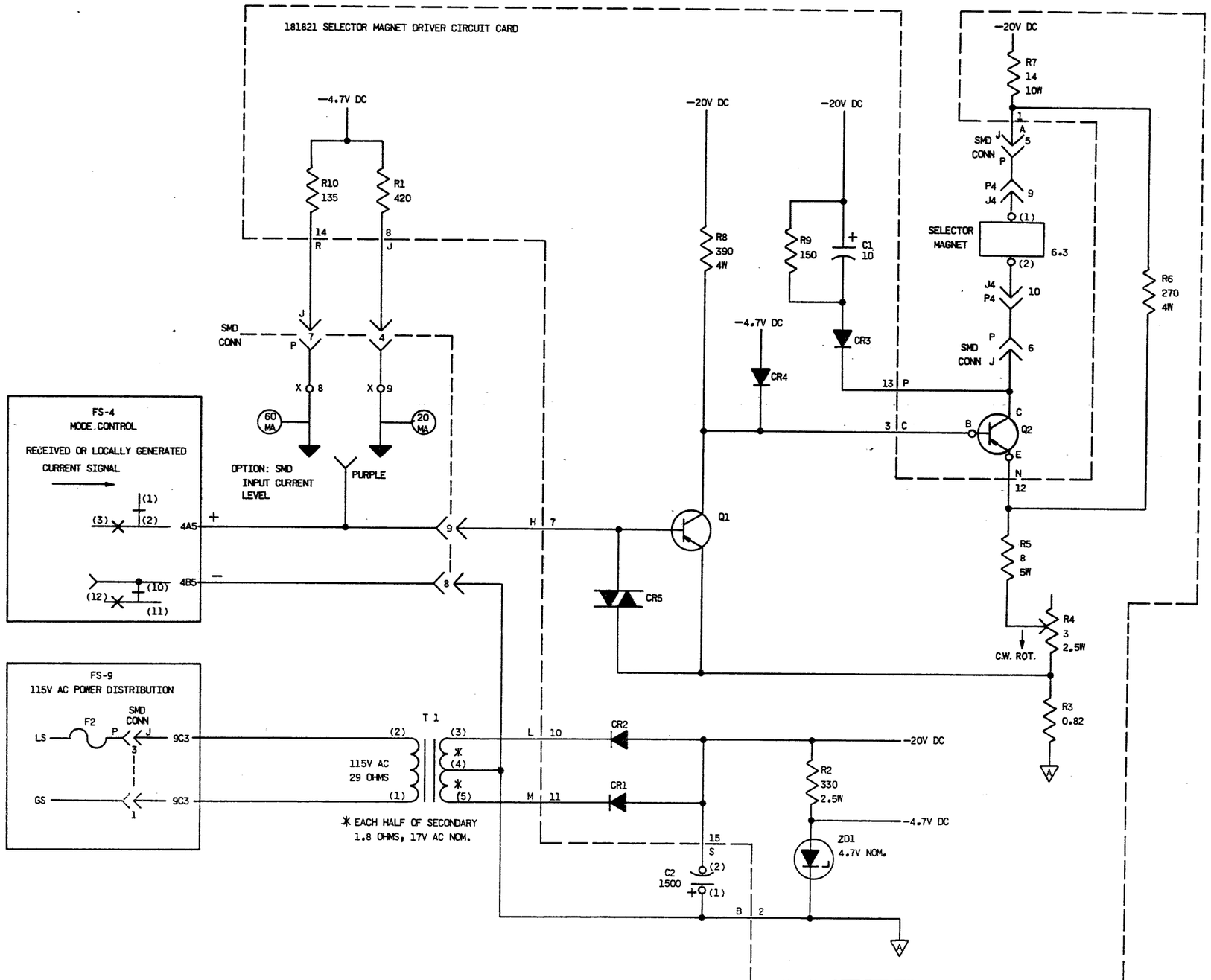

MODEL 33
RO, KSR, AND ASR SETS
3300, 3310, 3320 SERIES

TELETYPE

1180 SD-BI