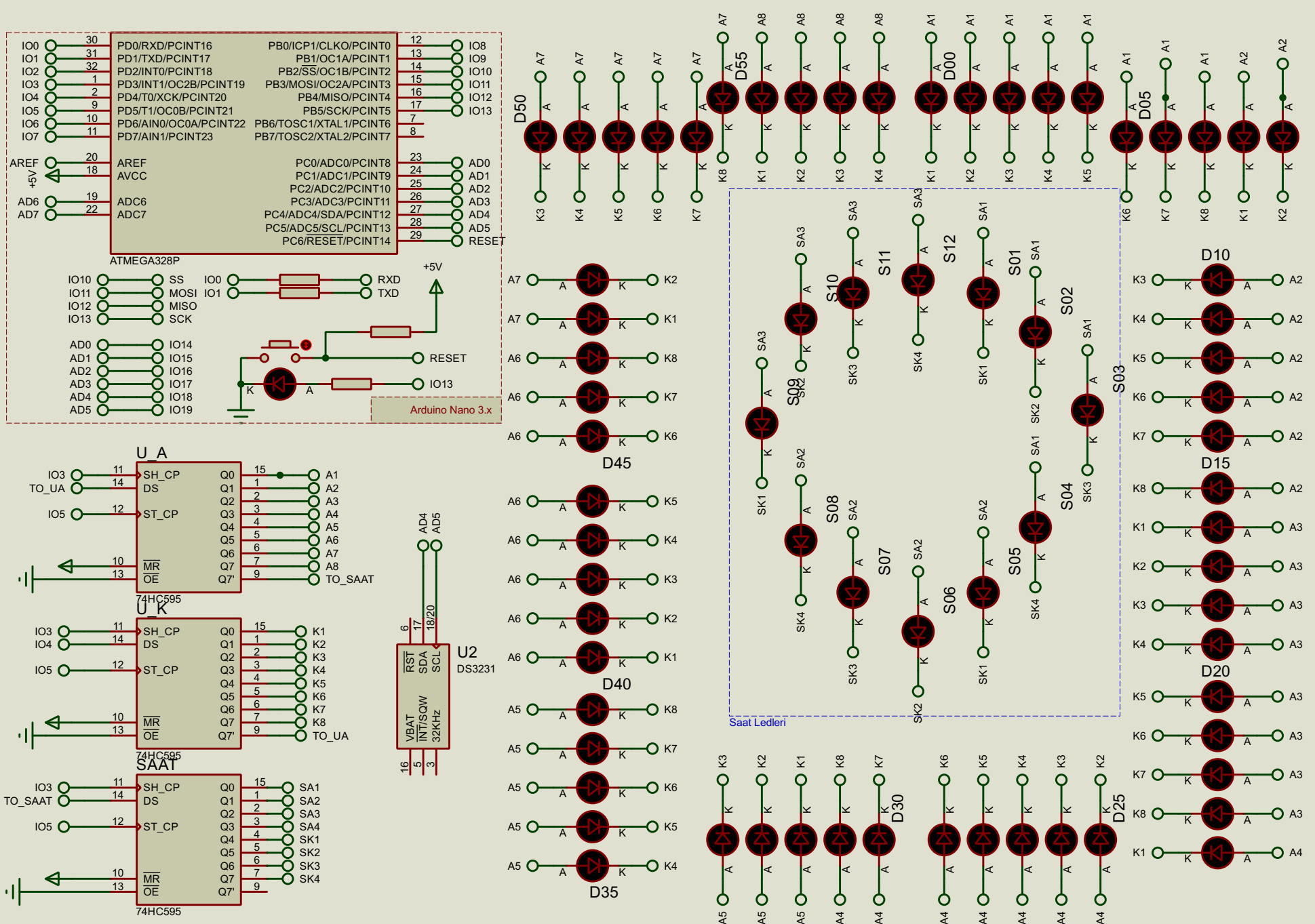
ATMEGA328P
PD0/RXD/PCINT16
PD1/TXD/PCINT17
PD2/INT0/PCINT18
PD3/INT1/OC2B/PCINT19
PD4/T0/XCK/PCINT20
PD5/T1/OC0B/PCINT21
PD6/AIN0/OC0A/PCINT22
PD7/AIN1/PCINT23
PB0/ICP1/CLKO/PCINT0
PB1/OC1A/PCINT1
PB2/SS/OC1B/PCINT2
PB3/MOSI/OC2A/PCINT3
PB4/MISO/PCINT4
PB5/SCK/PCINT5
PB6/TOSC1/XTAL1/PCINT6
PB7/TOSC2/XTAL2/PCINT7
AREF
AVCC
ADC6
ADC7
PC0/ADC0/PCINT8
PC1/ADC1/PCINT9
PC2/ADC2/PCINT10
PC3/ADC3/PCINT11
PC4/ADC4/SDA/PCINT12
PC5/ADC5/SCL/PCINT13
PC6/RESET/PCINT14
+5V
SS
MOSI
MISO
SCK
RXD
TXD
RESET
Arduino Nano 3.x
U_A
U_K
SAAT
74HC595
SH_CP
DS
ST_CP
MR
OE
TO_UA
TO_SAAT
U2
DS3231
RST
SDA
SCL
VBAT
INT/SQW
32KHz
D50
D55
D00
D05
D45
D40
D35
D30
D25
D10
D15
D20
S01
S02
S03
S04
S05
S06
S07
S08
S09
S10
S11
S12
Saat Ledleri