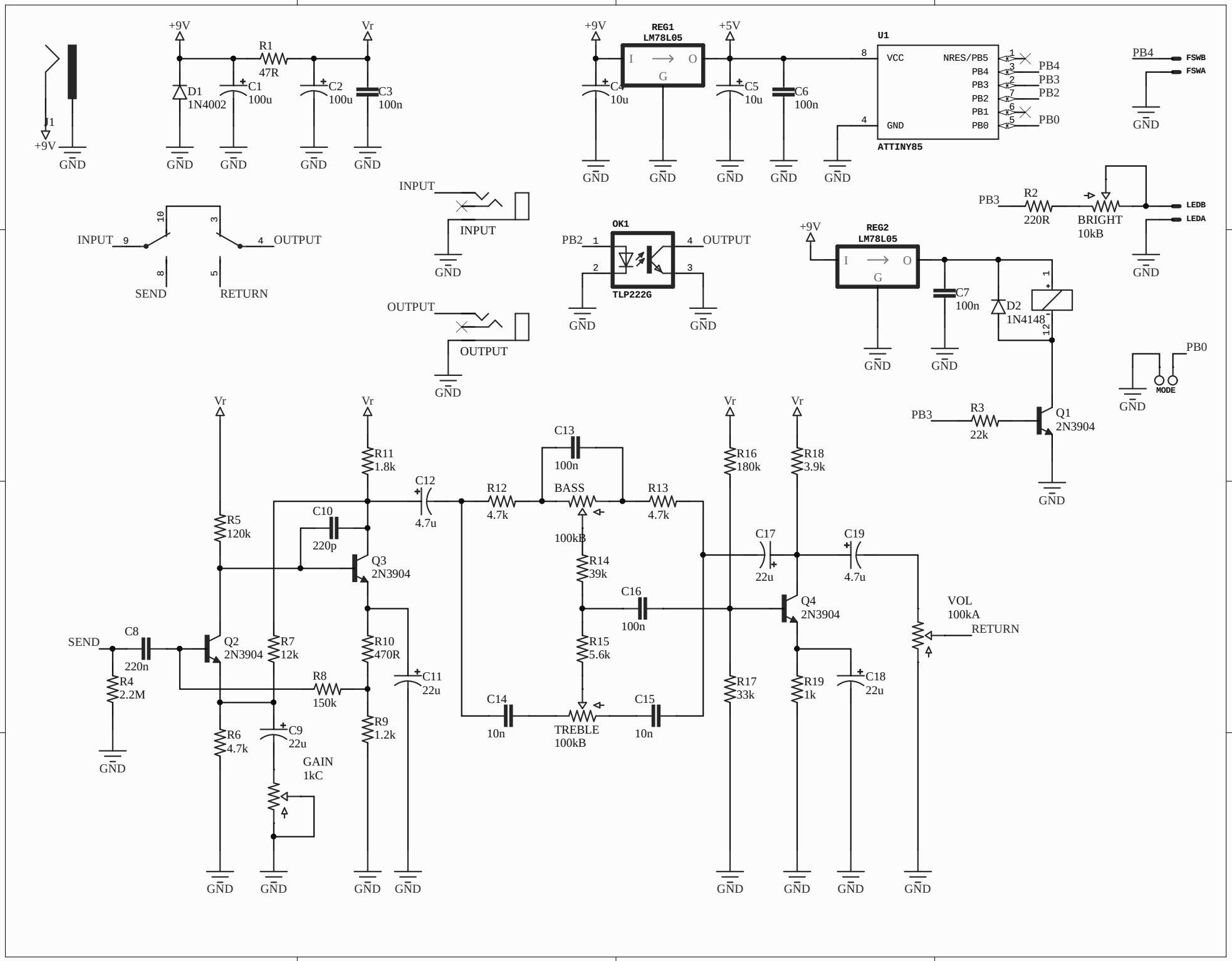
J1
+9V
GND
+9V
R1
47R
Vr
D1
1N4002
C1
100u
C2
100u
C3
100n
REG1
LM78L05
I
O
G
C4
10u
+5V
C5
10u
C6
100n
U1
VCC
GND
NRES/PB5
PB4
PB3
PB2
PB1
PB0
ATTINY85
FSWB
FSWA
INPUT
OUTPUT
SEND
RETURN
OK1
TLP222G
REG2
LM78L05
C7
100n
D2
1N4148
R2
220R
BRIGHT
10kB
LEDB
LEDA
MODE
R3
22k
Q1
2N3904
R5
120k
C10
220p
R11
1.8k
C12
4.7u
R12
4.7k
C13
100n
BASS
100kB
R13
4.7k
R14
39k
C16
100n
R15
5.6k
C14
10n
TREBLE
100kB
C15
10n
R16
180k
R18
3.9k
C17
22u
C19
4.7u
Q4
2N3904
VOL
100kA
R17
33k
R19
1k
C18
22u
Q3
2N3904
C8
220n
Q2
2N3904
R4
2.2M
R7
12k
R8
150k
R10
470R
C11
22u
R9
1.2k
R6
4.7k
C9
22u
GAIN
1kC