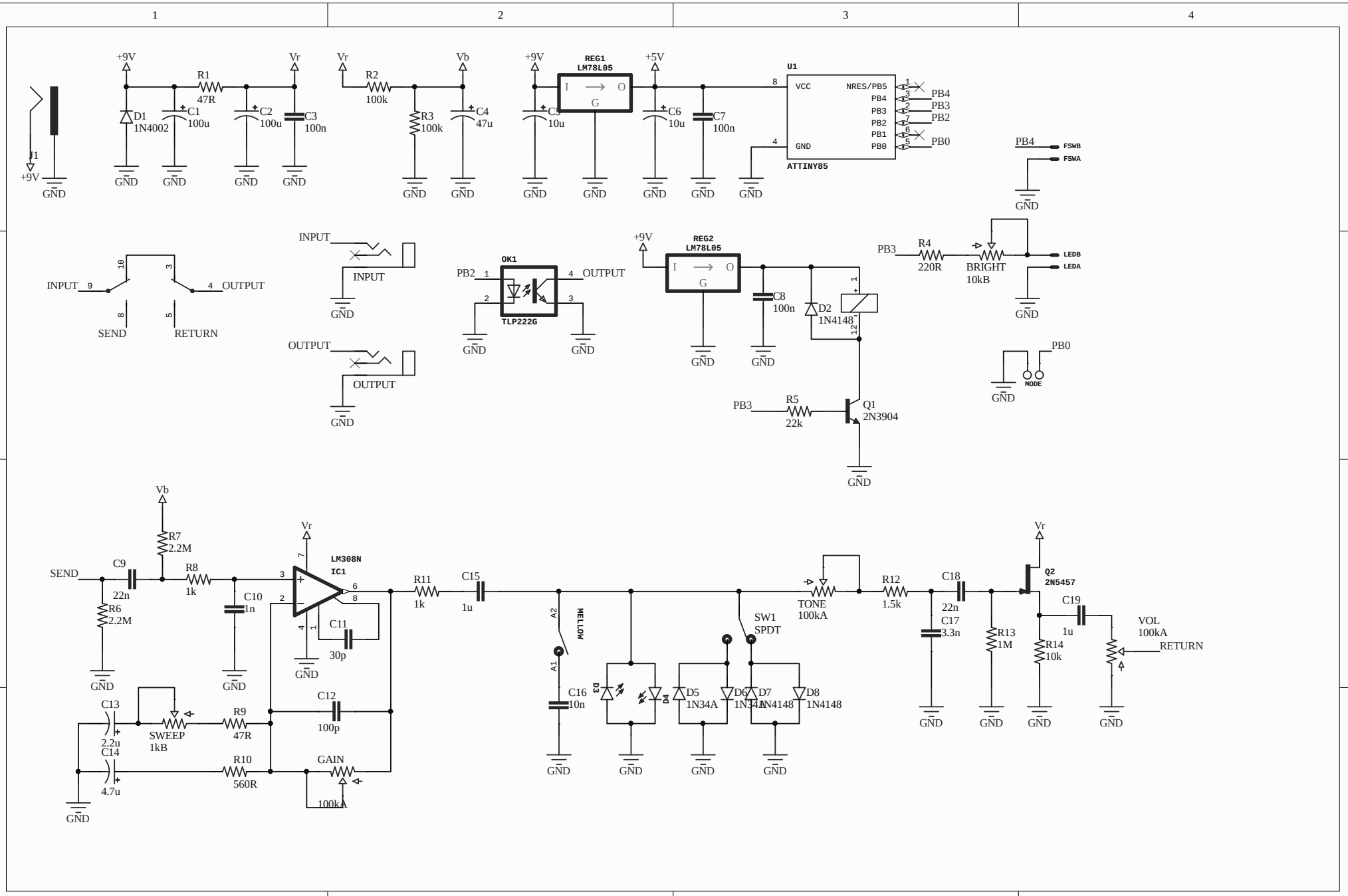
J1
+9V
GND
D1
1N4002
R1
47R
C1
100u
C2
100u
C3
100n
Vr
R2
100k
R3
100k
Vb
C4
47u
REG1
LM78L05
I
O
G
C5
10u
+5V
C6
10u
C7
100n
U1
VCC
GND
NRES/PB5
PB4
PB3
PB2
PB1
PB0
ATTINY85
FSWB
FSWA
INPUT
OUTPUT
SEND
RETURN
OK1
TLP222G
REG2
LM78L05
C8
100n
D2
1N4148
R4
220R
BRIGHT
10kB
LEDB
LEDA
MODE
R5
22k
Q1
2N3904
R7
2.2M
R6
2.2M
C9
22n
R8
1k
C10
1n
LM308N
IC1
C11
30p
C12
100p
C13
2.2u
C14
4.7u
SWEEP
1kB
R9
47R
R10
560R
GAIN
100kA
R11
1k
C15
1u
A2
A1
MELOW
C16
10n
D3
D4
D5
1N34A
D6
1N34A
D7
1N4148
D8
1N4148
SW1
SPDT
TONE
100kA
R12
1.5k
C18
22n
C17
3.3n
R13
1M
R14
10k
Q2
2N5457
C19
1u
VOL
100kA
RETURN