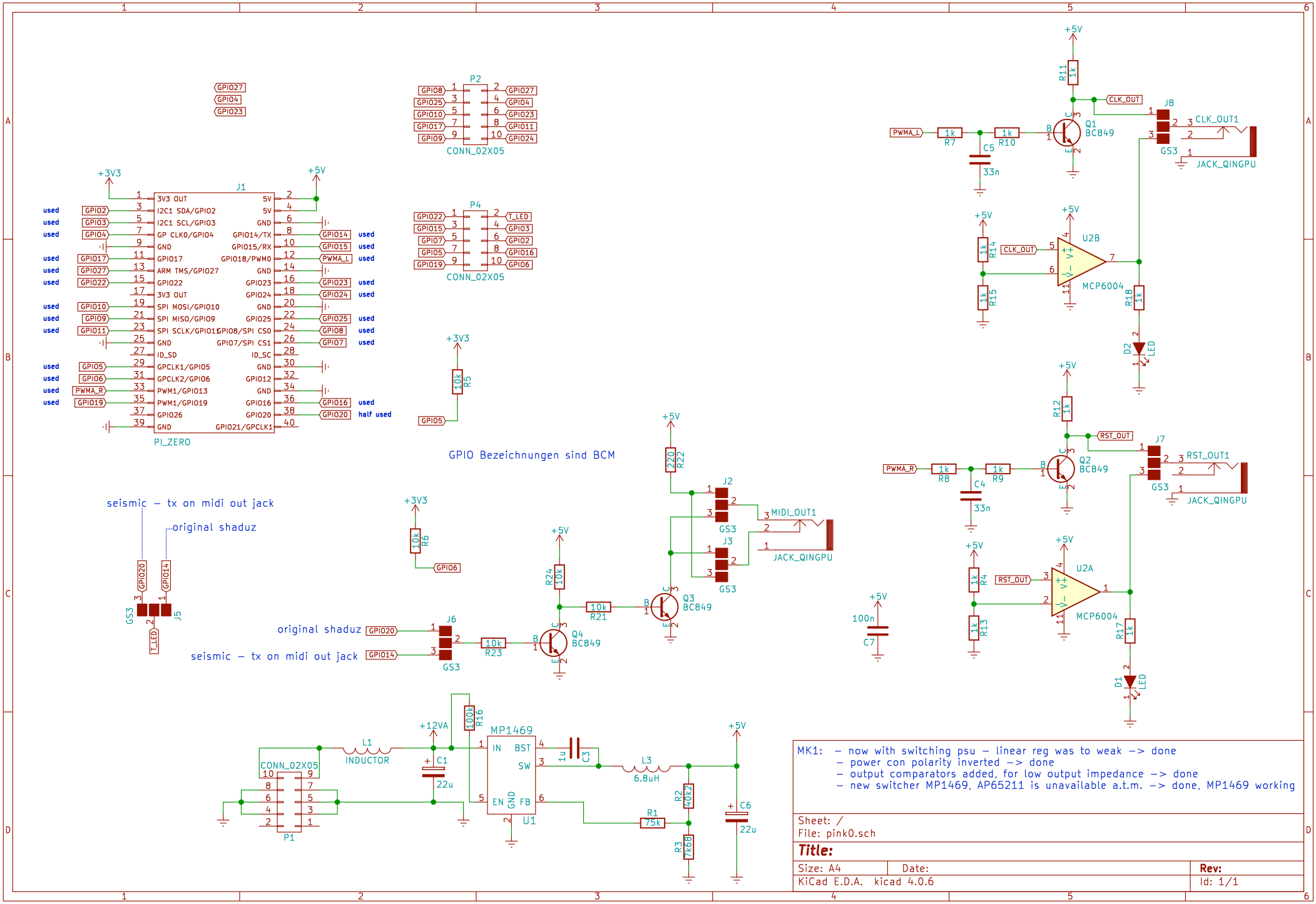
GPIO27
GPIO4
GPIO23
P2
CONN_02X05
P4
CONN_02X05
J1
PI_ZERO
3V3 OUT
I2C1 SDA/GPIO2
I2C1 SCL/GPIO3
GP CLK0/GPIO4
GPIO17
ARM TMS/GPIO27
GPIO22
SPI MOSI/GPIO10
SPI MISO/GPIO9
SPI SCLK/GPIO11
ID_SD
GPCLK1/GPIO5
GPCLK2/GPIO6
PWM1/GPIO13
PWM1/GPIO19
GPIO26
GPIO14/TX
GPIO15/RX
GPIO18/PWM0
GPIO23
GPIO24
GPIO25
GPIO8/SPI CS0
GPIO7/SPI CS1
ID_SC
GPIO12
GPIO16
GPIO20
GPIO21/GPCLK1
GPIO Bezeichnungen sind BCM
seismic – tx on midi out jack
original shaduz
J5
GS3
J6
J2
J3
MIDI_OUT1
JACK_QINGPU
Q3 BC849
Q4 BC849
R21 10k
R23 10k
R24 10k
R22 220
R5 10k
R6 10k
MP1469
U1
L1 INDUCTOR
L3 6.8uH
C1 22u
C3 1u
C6 22u
R1 75k
R2 40k2
R3 7k68
R16 100k
CONN_02X05
P1
Q1 BC849
Q2 BC849
J8
J7
CLK_OUT1
RST_OUT1
U2B
U2A
MCP6004
R7 1k
R10 1k
R11 1k
R8 1k
R9 1k
R12 1k
R14 1k
R15 1k
R18 1k
R4 1k
R13 1k
R17 1k
C5 33n
C4 33n
C7 100n
D2 LED
D1 LED
MK1: – now with switching psu – linear reg was to weak –> done
– power con polarity inverted –> done
– output comparators added, for low output impedance –> done
– new switcher MP1469, AP65211 is unavailable a.t.m. –> done, MP1469 working
Sheet: /
File: pink0.sch
Title:
Size: A4
Date:
Rev:
KiCad E.D.A. kicad 4.0.6
Id: 1/1