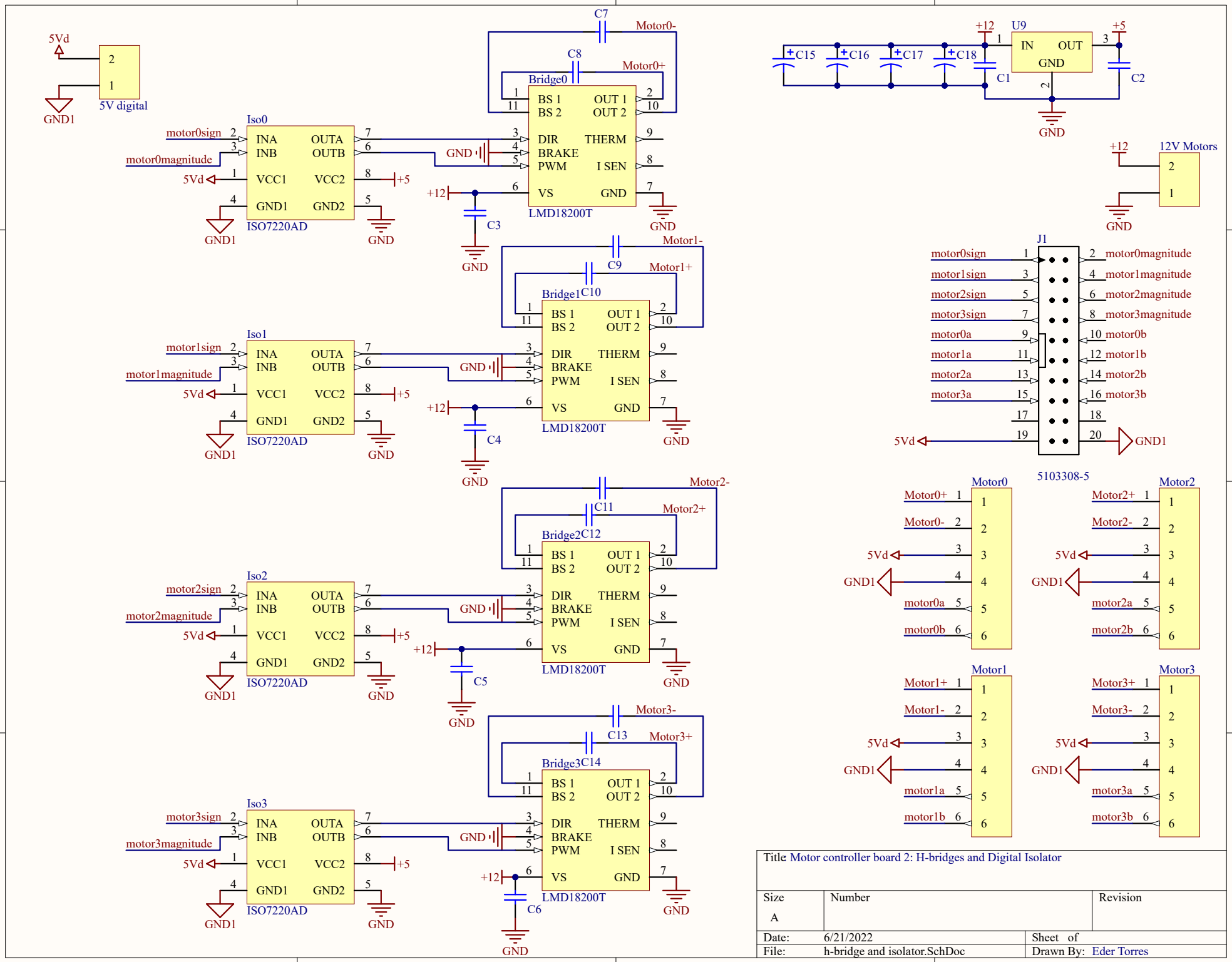
5Vd
5V digital
GND1
Iso0
motor0sign
motor0magnitude
INA
INB
VCC1
GND1
OUTA
OUTB
VCC2
GND2
ISO7220AD
Bridge0
BS 1
BS 2
DIR
BRAKE
PWM
VS
OUT 1
OUT 2
THERM
I SEN
GND
LMD18200T
C7
C8
C3
Motor0-
Motor0+
Iso1
motor1sign
motor1magnitude
Bridge1
C9
C10
C4
Motor1-
Motor1+
Iso2
motor2sign
motor2magnitude
Bridge2
C11
C12
C5
Motor2-
Motor2+
Iso3
motor3sign
motor3magnitude
Bridge3
C13
C14
C6
Motor3-
Motor3+
+12
+5
U9
IN
OUT
C15
C16
C17
C18
C1
C2
12V Motors
J1
motor0sign
motor1sign
motor2sign
motor3sign
motor0a
motor1a
motor2a
motor3a
motor0magnitude
motor1magnitude
motor2magnitude
motor3magnitude
motor0b
motor1b
motor2b
motor3b
5103308-5
Motor0
Motor1
Motor2
Motor3
Motor0+
Motor0-
Motor1+
Motor1-
Motor2+
Motor2-
Motor3+
Motor3-
motor0a
motor0b
motor1a
motor1b
motor2a
motor2b
motor3a
motor3b
Title Motor controller board 2: H-bridges and Digital Isolator
Size
A
Number
Revision
Date: 6/21/2022
Sheet of
File: h-bridge and isolator.SchDoc
Drawn By: Eder Torres