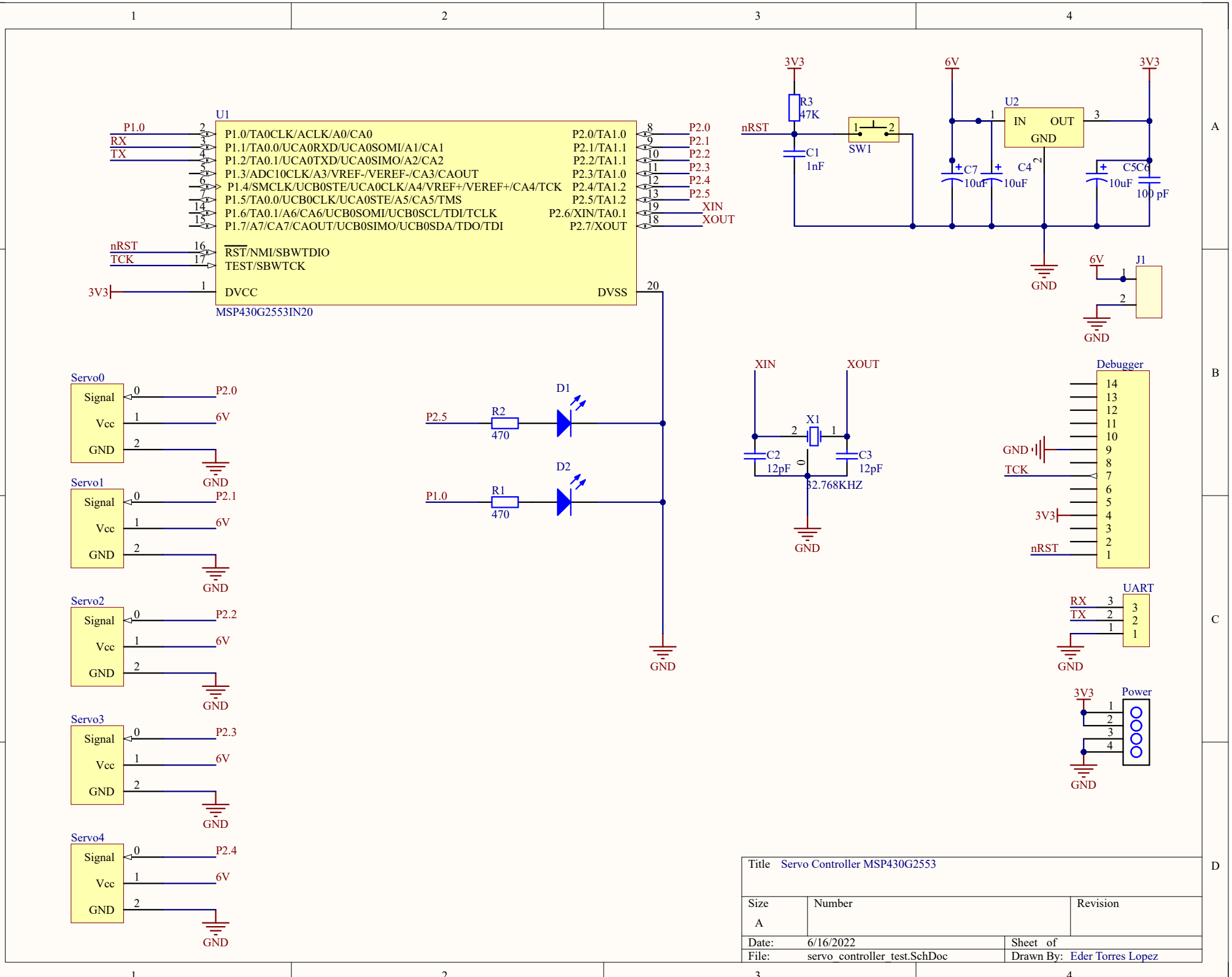
U1
P1.0/TA0CLK/ACLK/A0/CA0
P1.1/TA0.0/UCA0RXD/UCA0SOMI/A1/CA1
P1.2/TA0.1/UCA0TXD/UCA0SIMO/A2/CA2
P1.3/ADC10CLK/A3/VREF-/VEREF-/CA3/CAOUT
P1.4/SMCLK/UCB0STE/UCA0CLK/A4/VREF+/VEREF+/CA4/TCK
P1.5/TA0.0/UCB0CLK/UCA0STE/A5/CA5/TMS
P1.6/TA0.1/A6/CA6/UCB0SOMI/UCB0SCL/TDI/TCLK
P1.7/A7/CA7/CAOUT/UCB0SIMO/UCB0SDA/TDO/TDI
RST/NMI/SBWTDIO
TEST/SBWTCK
DVCC
DVSS
P2.0/TA1.0
P2.1/TA1.1
P2.2/TA1.1
P2.3/TA1.0
P2.4/TA1.2
P2.5/TA1.2
P2.6/XIN/TA0.1
P2.7/XOUT
MSP430G2553IN20
P1.0
RX
TX
nRST
TCK
3V3
P2.0
P2.1
P2.2
P2.3
P2.4
P2.5
XIN
XOUT
3V3
R3
47K
nRST
C1
1nF
SW1
6V
U2
IN
OUT
GND
C7
10uF
C4
10uF
C5C6
10uF
100 pF
GND
6V
J1
GND
Servo0
Signal
Vcc
GND
P2.0
6V
GND
Servo1
P2.1
Servo2
P2.2
Servo3
P2.3
Servo4
P2.4
P2.5
R2
470
D1
P1.0
R1
470
D2
XIN
XOUT
X1
C2
12pF
C3
12pF
32.768KHZ
GND
Debugger
GND
TCK
3V3
nRST
UART
RX
TX
GND
3V3
Power
GND
Title Servo Controller MSP430G2553
Size
A
Number
Revision
Date: 6/16/2022
Sheet of
File: servo_controller_test.SchDoc
Drawn By: Eder Torres Lopez