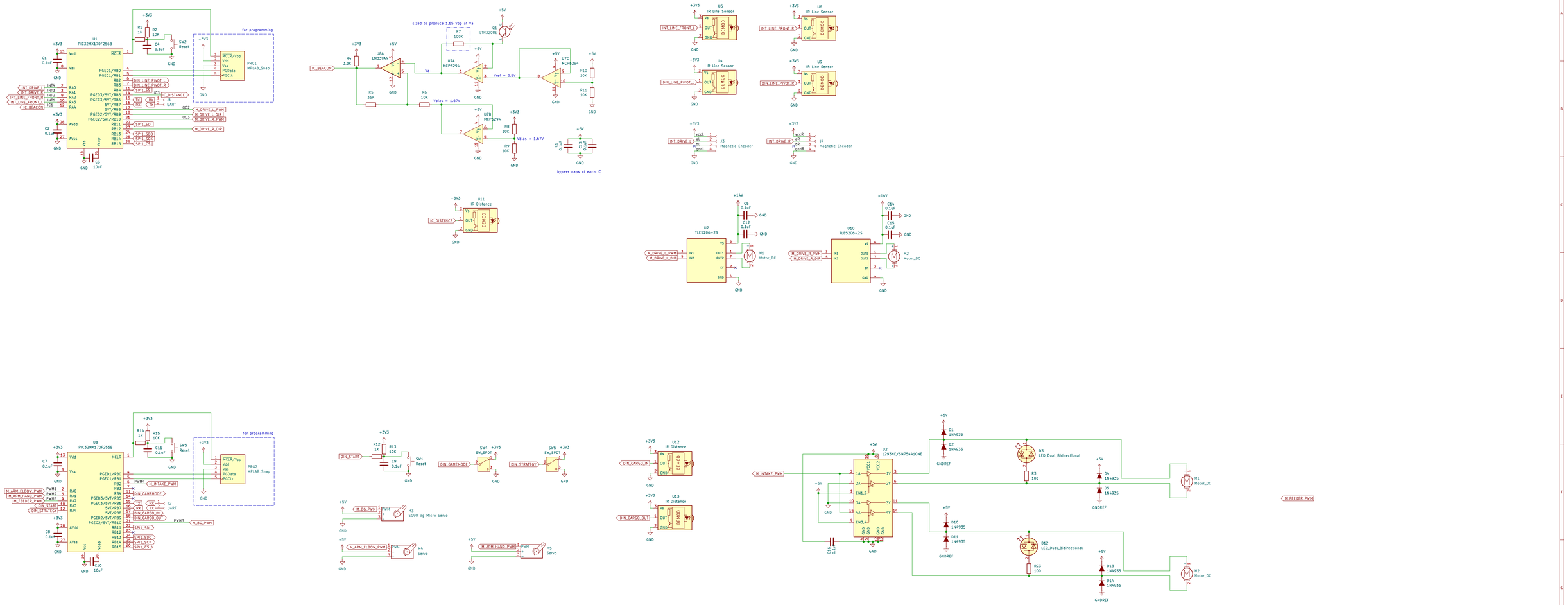

Stanford University
Electrical Engineering Department
Stanford, CA 94305

Ege Turan
Sheet: /
File: mobilePlatformElectronics.kicad_sch

Title: Test sheet

Size: D	Date:	Rev: 0.1
KiCad E.D.A. 9.0.7		Id: 1/1