ME 218: Tilt-A-World
Tip the Seesaw

Project Presentation on March 4 starting at 7:00 pm.
Revision 0: 2/4/26

Goal:

The goal of this project is to provide you with an opportunity to apply your knowledge to solve an open-ended problem. The task is to design and build, from scratch, a machine that can autonomously orient, navigate, and manipulate various elements of a pre-designed game in order to best an opponent, whether or not that opponent is an active player.

Purpose:

The underlying purpose of this project is to give you some experience in integrating all that you have learned in ME218 as well as your prior courses, with a particular emphasis on material learned in ME218B. To gain this experience, you and your team will design and implement an autonomous, untethered mobile robot.

Background:

After your accidental journey to the late 1800s, your steam-powered "Temporal Entertainment Modules" have become a staple of the Karlnival. Your presence is no longer feared, but the city is still powered by a chaotic, coal-driven industrial system that struggles to keep up with demand.

The Karlnival has now expanded around a massive coal factory that feeds towering mechanical seesaws, which power much of the festival's moving attractions.

The Task:

Your task is to design and build a Steampunk-Themed Autonomous Coal-Loading Robot that blends into the Karlnival aesthetic while demonstrating modern mechatronic capability.

Your robot must autonomously navigate the factory, collect coal, and strategically deposit it onto large seesaws. The more coal you deposit into the seesaws, the more money you'll get to rebuild your time machine to travel back to the present. The system should integrate sensors, actuators, and event-driven software running in C on a PIC32 microcontroller.

A successful design will be both visually steampunk and technically sophisticated, showcasing autonomy, feedback control, and intelligent decision-making.

Specifications

Overview:

- ☐ Each team will construct a robot.
- ☐ The robots will compete in the arena to pick up and place coal into their buckets on the seesaws.
- ☐ While the goal of the project is to have robots compete head-to-head, the grading standard is to score in the absence of an opponent.

The Arena, The Coal, The Seesaws, and The Wall:

- ☐ The arena is an approximately 2440 mm by 2440 mm with exterior walls 82.5 mm tall. A top view is shown in Figure 1.
- ☐ The arena is divided into two equal-sized regions by the wall which contains the five seesaws.
- ☐ No portion of any robot may trespass the wall into the opponent's part of the field, as seen in Figure 4.
- ☐ Entering the opponent's side of the field in a manner that interferes with their robot's movement or operation will result in immediate disqualification. In the Karlnival, this is punishable by up to 1000 years in jail and a fine of up to 10,000 Blipper-Blops (Penal Code §442.17(a)) (a fine which you certainly can't afford to pay since you aren't paid for your work).

- ☐ Side views of the seesaws are shown in Figures 2 and 3.
- ☐ While the seesaw is finalized, the hosts of the Karlnival reserve the right to add additional components to the wall or the exterior of the seesaw for decorative purposes.
- ☐ Each half of the arena is marked by modulated IR beacons (refer to Figures 1 and 6 for beacon positions). The modulation frequencies of each beacon are shown in Table 1. Within each half of the arena, one 180°beacon (G or B) will be mounted to the front of the dispenser, and one 360°beacon (R and L) will be mounted underneath each seesaw that does not have a line drawn to it.
- ☐ A strip of 2.54 mm-wide black tape runs along the length of the arena, parallel to the wall. This tape is designed to aid with navigation.
- ☐ On each side of the arena, there are secondary strips of 2.54 mm-wide black tape, orthogonal to the wall, that extend to the seesaws. These strips have, at the end with the seesaw, a ”tee” to aid with navigation towards the seesaw.
- ☐ Coal will be placed within the dispensers prior to the start of the game at the indicated positions in the arena.
- ☐ Each seesaw has two buckets, one on each side of the arena. Each team earns one point for every seesaw they successfully tilt in their favor. The seesaw must be visibly and significantly tilted toward that team to count.
- ☐ The coal consists of lightweight foam spheres approximately 4.5 mm in diameter. Dimensions may vary between coal pieces.
- ☐ A sample drawing of a piece of coal is shown in Figure 5.

Table 1: Seesaw IR Beacon Frequencies

Beacon	Frequency (Hz)	Period (μS)
G	3333	300
B	1427	700
R	909	1100
L	2000	500

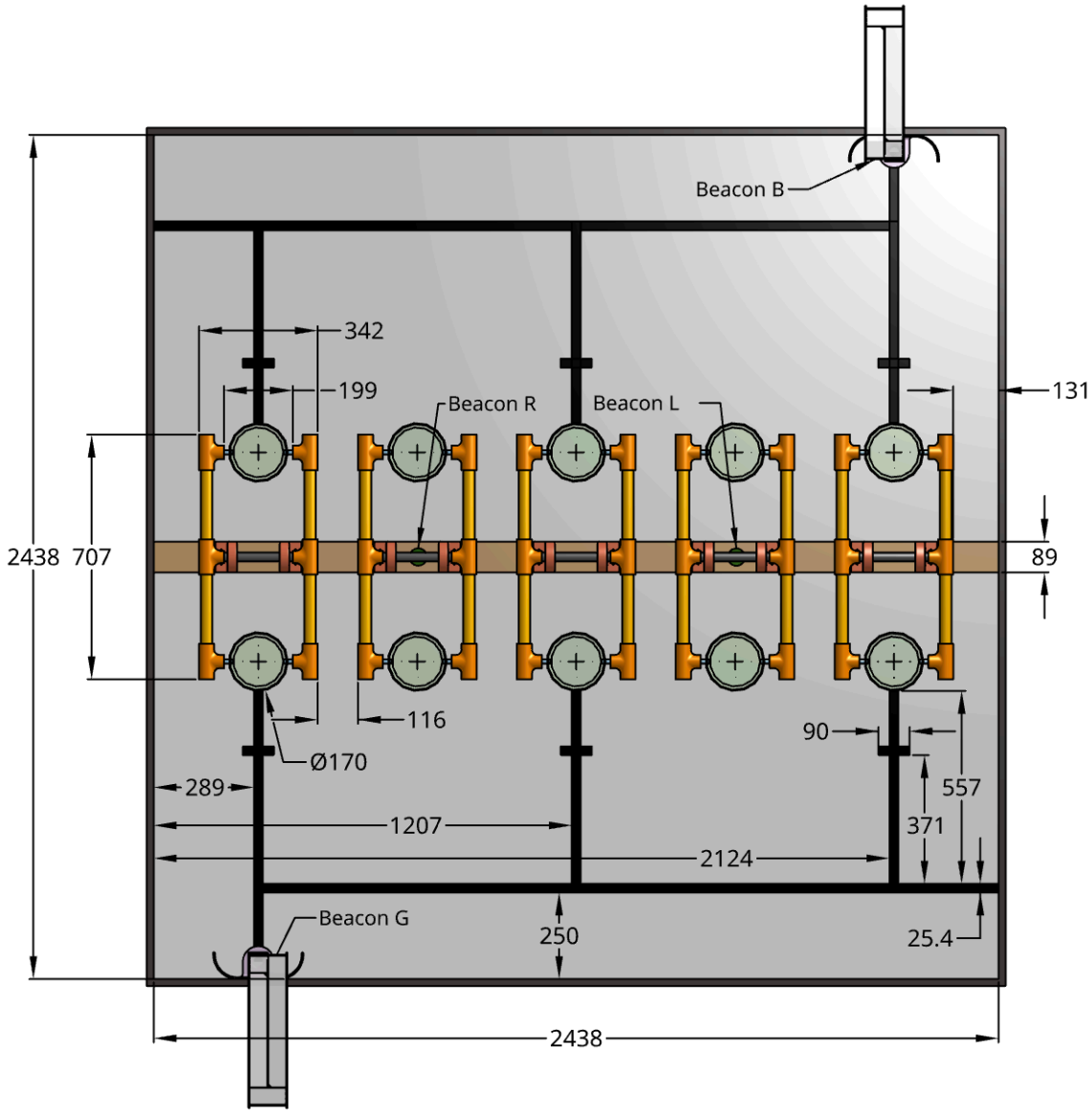

Figure 1: The factory, also known as the arena. Beacons B and G are mounted on the coal dispensers, while Beacons R and L are mounted underneath the two seesaws that do not have guiding lines. All dimensions are ± 20 mm.

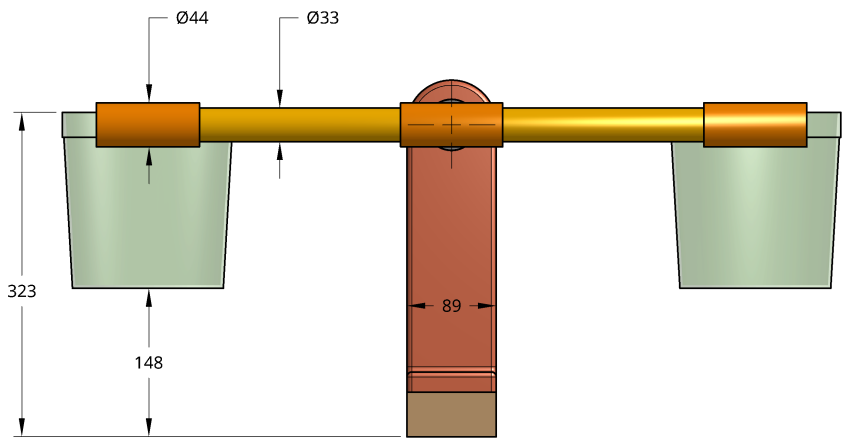

Figure 2: Front view of a seesaw in its neutral position. All dimensions are ± 5 mm.

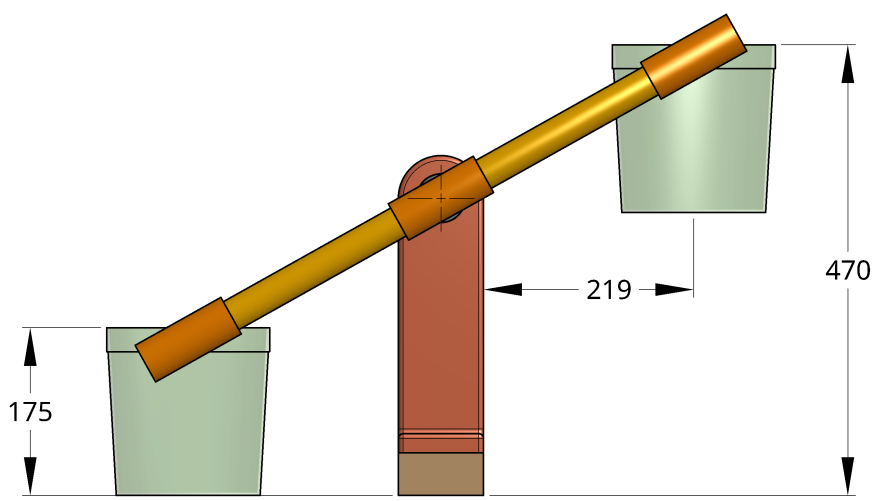

Figure 3: Front view of a seesaw in its scored position. All dimensions are ± 5 mm.

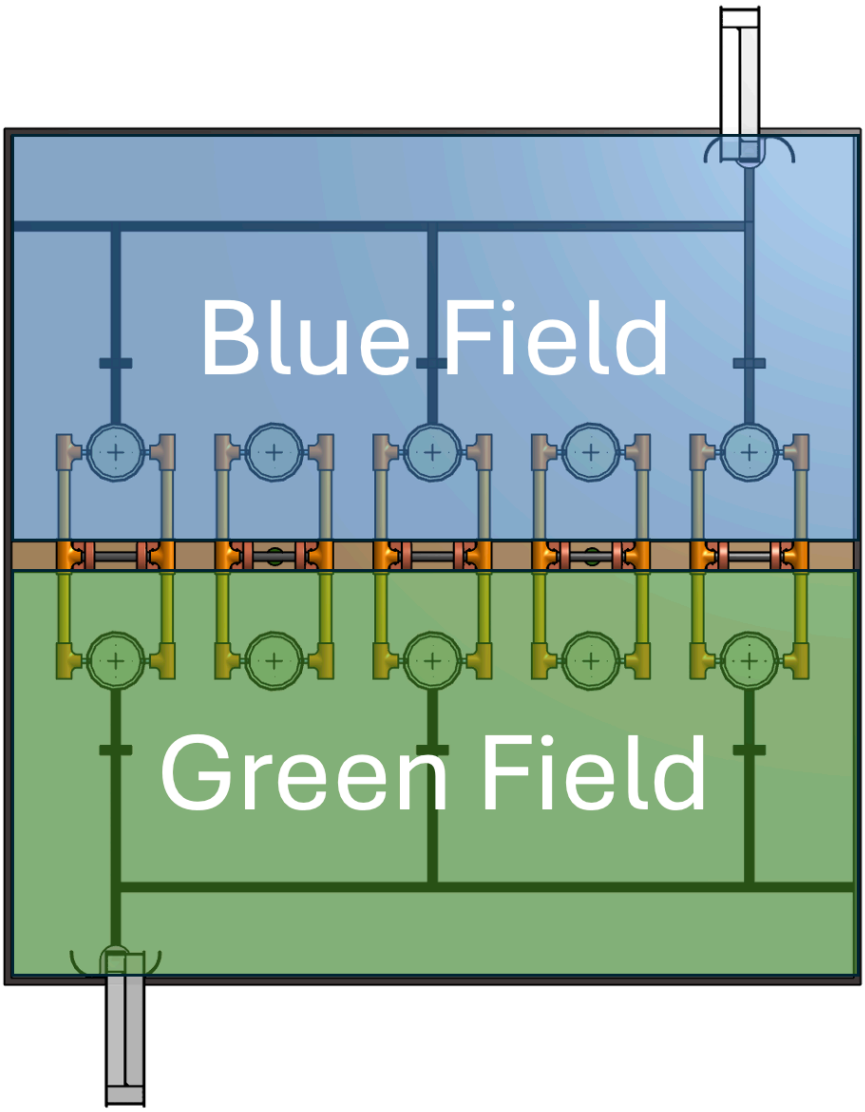

Figure 4: Field definition. Robots must include an electro-mechanical indicator to shows which side it is on at the start of a game round.

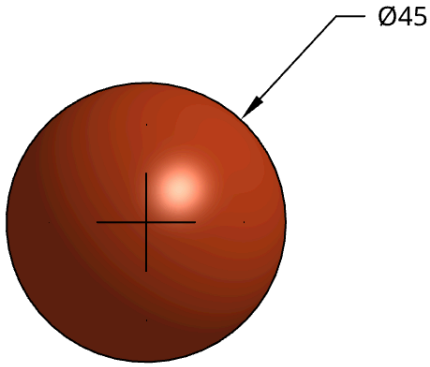

Figure 5: CAD Drawing of a piece of coal. Dimensions are in mm. All dimensions are ± 5 mm.

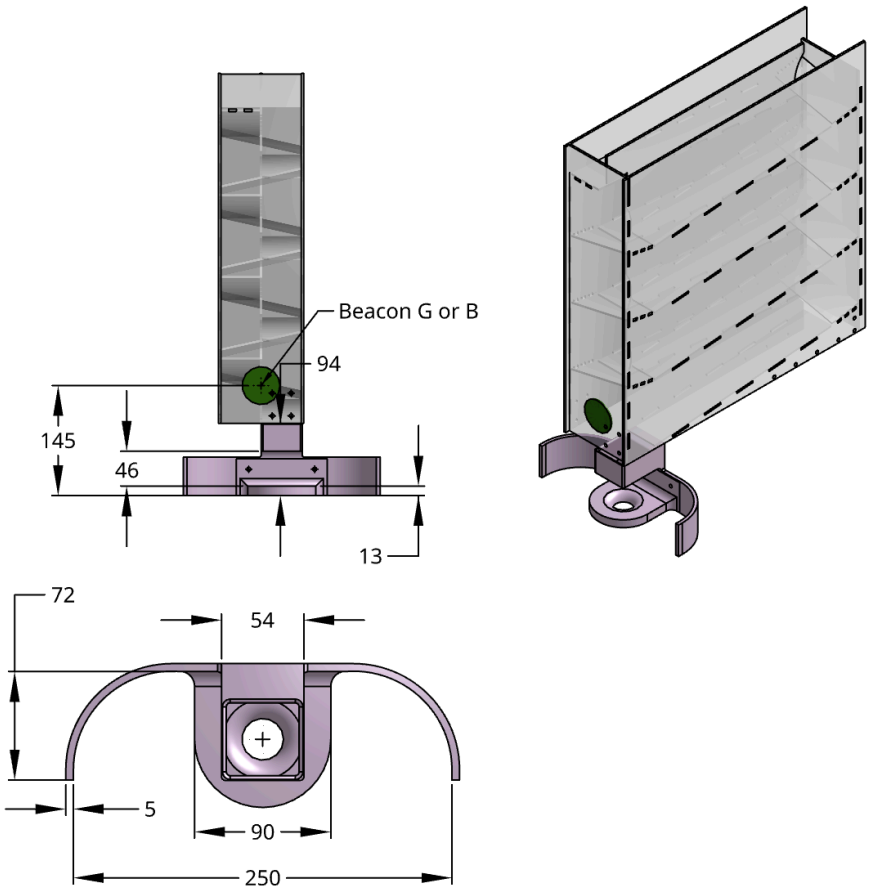

Figure 6: CAD drawing of a dispenser. Dimensions are in mm. All dimensions are ± 20 mm.

The Robot:

- ☐ Each robot must be a stand-alone entity, capable of meeting all specifications described in this document. Only SPDL-supplied battery power is permitted. No more than two batteries may be used to drive motors that transfer force to the surface of the arena.
- ☐ Each robot must be able to automatically determine which side of the arena it has been placed on.
- ☐ Each robot must include an electro-mechanical indicator that changes based on which region it is in at the start of a game round.
- ☐ Robots must be autonomous (no tele-operation) and untethered (battery power only).
- ☐ Parts of a robot that touch the arena floor must roll or slide, and **must be non-marking/non-marring**.
- ☐ Only the SPDL-provided motors may be used to drive anything that transfers force to the surface of the arena.
- ☐ At the beginning of a game round, your robot must fit within a cube measuring 320 mm per side.
- ☐ After a game round starts, your robot may expand to occupy a single rectangular prisim measuring 480 mm by 480 mm in length and width and 570 mm in height.
- ☐ No part of the robot may extrude into opponent's field during any point of the game.
- ☐ Each robot shall contain a network of processors consisting of, at a minimum, one PIC32 SPI leader and one PIC32 SPI follower device. How the necessary functionality is partitioned among the networked processors is up to each team to design. More PIC32's are acceptable, though not other microcontroller platforms.
- ☐ Each robot must carry an easily accessible switch which shall cut power to the robot. This switch is for safety, in case of software or hardware malfunction.
- ☐ The power supply for the robot must be fused for protection in case of a hardware malfunction.
- ☐ Each robot must be constructed as part of ME218B. It may not be based on a pre-existing or commercial off-the-shelf platform.
- ☐ Each team is limited to a total expenditure of **$200.00/team** for all materials and parts used in the construction of your project. Materials supplied to each team from the SPDL or from the lab kit do not count against the limit. All other items count at their fair market value.
- ☐ Each robot must provide an indication of when it thinks that a game round is in progress that is clearly visible from 7 m away. This indicator should be activated when the robot determines that the game round has started, and be deactivated when the robot thinks that the game round has ended.

Basic Game Play:

- ☐ The game is a head-to-head competition between two robots to move coal into their seesaw buckets.
- ☐ Coal may be moved by any mechanism that otherwise does not violate the rules. Launching coal is allowed as long as it does not injure spectators standing near the arena.
- ☐ Before the start of each game round, each competing team will place their robot in the starting area in their region, centered on the black tape line.
- ☐ The teaching staff will choose the starting orientation of the robots.
- ☐ The game round begins when a member of the teaching staff announces the start. At this time, a member of each team is expected to press a button on their robot to commence gameplay. Any further interaction with the robots is prohibited until the game round ends.
- ☐ Each game round lasts for 2 minutes and 18 seconds.
- ☐ During the game, each robot scores by acquiring coal and placing it in its seesaws to tilt the seesaw to its side.
- ☐ The final score will be a count of how many seesaws are tilted towards your side. **Note that, for full credit in the Grading Session, a robot needs to tilt two seesaws**.
- ☐ When a robot detects that the round time has elapsed, the robot must cease movement and deactivate its game-in-progress indicator.
- ☐ At the end of a game round, the robot with the highest total score is declared the winner.
- ☐ If both teams have an equal score at the end of a game round, then a Sudden Death round is played. In Sudden Death, the first robot to cause a score change in their favor wins.

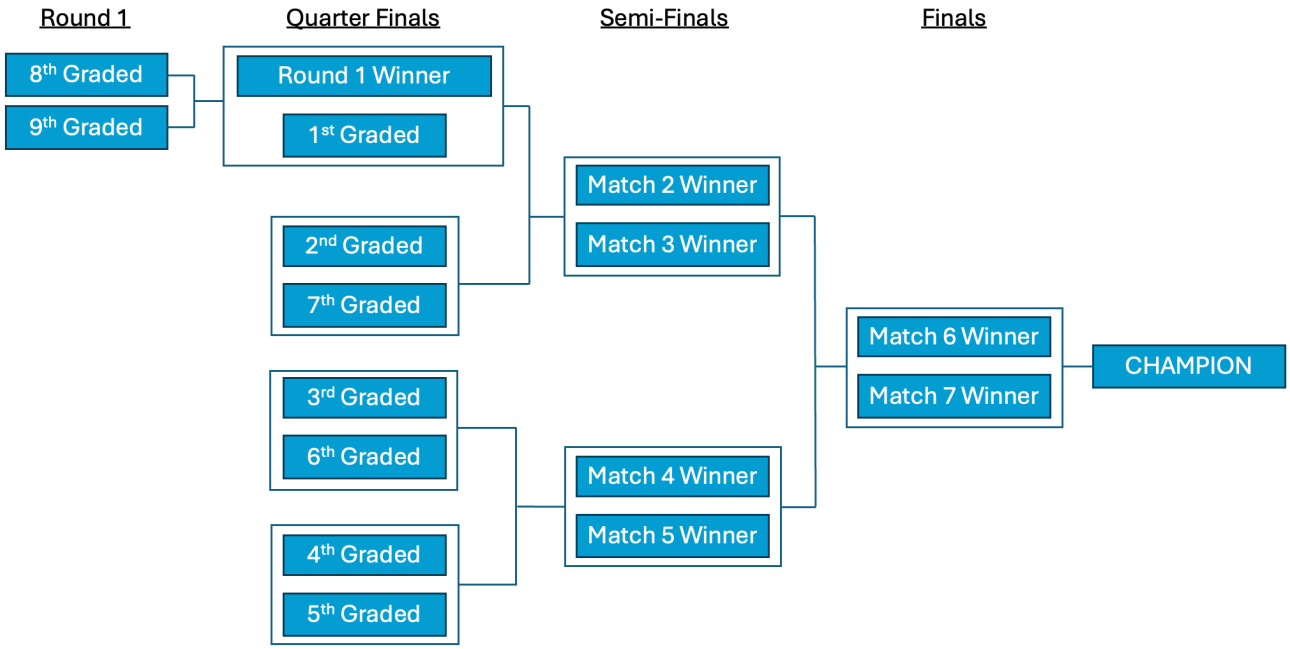

Figure 7: Team Brackets.

Making it Past the First Round:

- ☐ Since there are an odd number of teams, the following procedure will be used to determine which teams advance to the Second Round.
- ☐ The initial seeding of the teams (i.e. each team's opponent in the first round) will be determined by the order in which each team completes the Grading Session.
- ☐ In Match 1, the 8th Graded Team and the 9th Graded Team will face off.
- ☐ In Match 2, the 1st Graded Team plays the winner of Match 1.
- ☐ In Matches 3 through 5, the 2nd and 7th, 3rd and 6th, and 4th and 5th graded teams play each other.
- ☐ In Matches 6 and 7 (semifinals) the winners of Match 2 and Match 3, then the winners of Match 4 and Match 5 play each other.
- ☐ Match 8 will be the finals with the winner of Match 6 playing the winner of Match 7
- ☐ Sudden Death matches are played immediately after a tied Match.

General Rules and Requirements:

- ☐ No solderless breadboards are permitted in your robot.
- ☐ Intentional interference with the operation of another team's robot is prohibited.
- ☐ Each robot must start and remain in one piece during a game. Any locomotion of the robot should cause all parts of the robot to move.
- ☐ Your robot may not, **IN ANY WAY**, alter the condition (e.g. mar the walls, or floor) of the playing field.
- ☐ Your robot may not, **IN ANY WAY**, damage the seesaws, including but not limited to jamming or toppling.
- ☐ The use of gases or liquids to impart force on any object is prohibited.
- ☐ Intentional jamming of your opponent's sensors is prohibited.
- ☐ There is no class-imposed upper limit on the number of processors employed; however, you must use

only the PIC32MX170F256B. Tivas, Arduinos, Raspberry Pis, Teensys, Jetsons, and other microcontrollers are not permitted.

- ☐ You are limited to an expenditure of **$200.00/team** for all materials and parts used in the construction of your project. Materials supplied to each team by SPDL, from the lab kit, or the Cabinet Of Freedom do not count against the limit. All other items count at their fair market value. **If it's an issue with something from the kit, we will provide a replacement for free, but we can't guarantee latency. Be careful with your components.**
- ☐ A project logbook must be maintained for each group. A blog is appropriate to meet this requirement as long as it is made available to the teaching staff for review. This log should reflect the current state of the project, planning for the future, results of meetings, designs as they evolve, etc. The logbook is very useful as a **team communication tool** and as a document that will help when writing the report.
- ☐ A report describing the technical details of the system will be required. The report should be of sufficient detail that a person skilled at the level of ME218B could understand, reproduce, and modify the design. The report must be in website format, and be suitable for posting on the SPDL site.
- ☐ Robots based substantially on purchased platforms are not allowed.
- ☐ All projects must respect the spirit of the rules. If your team is considering anything that may violate the spirit of the rules, you must consult a member of the teaching staff or risk being disqualified on the day of the competition.

Safety:

- ☐ Your robot should be safe, both to users and to spectators. The teaching staff reserves the right to disqualify any robot considered unsafe. This also applies during testing.
- ☐ You should make a stand to support your robot on a benchtop for testing. The purpose of the stand is to prevent an errant robot from driving itself toward rapid unscheduled disassembly.
- ☐ No part of any robot may become ballistic.
- ☐ All liquids, gels, and aerosols must be in three-ounce or smaller containers. All liquids, gels, and aerosols must be placed in a single, quart-size, zip-top, clear plastic bag. Each robot can use only one quart-size, zip-top, clear plastic bag.
- ☐ Red, Green, and *especially* Blue shells, are prohibited. Any banana peels must stay within the confines of your robot at all times.
- ☐ Any early celebrations will be penalized.
- ☐ Your robot is not permitted to steal talent from any other robots.
- ☐ Robots may alter the space-time continuum only during the public presentations, but must have their flux-capacitor registration available for inspection at all times.

Checkpoints

Design Review:

During the day on **2/10/26** we will conduct design reviews. Sign-ups for 1-hour time slots of three teams each will take place on a Google sheet. Each team should prepare a few **simple** presentation slides (scans of sketches are OK). **No code, no state diagrams, no circuits.** The focus should be on the overall design and how you are tackling what you think are the critical subsystems, as well as how you will partition responsibility between team members. You will present to members of the teaching team as well as to your classmates, so that all may hear about your ideas and provide feedback and advice.

First Checkpoint:

By **2/13/26**, your team must submit a system block diagram, a set of KiCad schematics, textual descriptions, and software design documentation (including a state chart) that describes the state of the design *at that point in time*. The designs need not be tested, but they must be comprehensive, addressing all major subsystems. For your submission to Gradescope, create a single PDF document that includes the system block diagram, KiCad schematic(s), your state charts, and a document describing, in words, your strategy for meeting the project requirements and identifying your robot's core functionality. Only one team member needs to submit your checkpoint documentation.

"Man, I work in the warehouse! I'm cool, I'm hip and I'm jive."

Michael Scott, The Office

Second Checkpoint:

By **2/17/26**, you must demonstrate communications between at least two PICs. Between them, these PICs must demonstrate the ability to control the motors of the locomotion system and the ability to detect an IR beacon. This demonstration may be a tabletop demonstration and may be done while tethered to a deveopment computer.

Third Checkpoint:

By **2/24/26**, you must demonstrate an instance of your (possibly) tethered, motorized platform moving, though not necessarily with integrated software. Your platform must be able to, starting from the start position on the field, locate an IR beacon and move towards it under coordinated control from multiple PICs.

Fourth Checkpoint:

By **2/28/26**, each team's robot must demonstrate, untethered and in an integrated physical form, under autonomous software control:

1. The ability to move around the field.
2. The ability to locate the IR beacons and to identify your side.
3. The ability to find/pick up the coal from the dispenser.

This will be tested by following the normal starting procedure for a Game, followed by your robot performing the required actions.

"What goes up must come down."

Isaac Newton (kinda)

Grading Session:

Teams must successfully complete a Grading Round by **3/3/26**. Unlike last quarter, the Grading Session this quarter is unscheduled - simply ask a TA/Karl at any point to be graded.

During a grading round, each team will be required to demonstrate that their robot can complete a single round of the Game.

During the Game, your robot must demonstrate, in a completely integrated form, all abilities detailed in Checkpoint 4, plus the ability to place coal in two seesaws and to cease all motion after 2 minutes and 18 seconds.

Evaluation for grading purposes will only occur during these rounds. If your robot fails at its first attempt to demonstrate the required functionality, it must demonstrate that functionality twice in succession at its next attempt. This increase continues after repeated failed attempts up to a maximum of four required successive demonstrations.

Public Presentation:

This will take place on **3/4/26** starting at 7:00 pm in the Building 550 Atrium. (Building 550 is where our classroom is located.)

At this event, members of the public will be encouraged to watch your robots battle for the title of Most Efficient robot (and for your team to escape back to the present-day)!

Report:

Drafts are due on **3/9/26** by 4:00 pm. The final version (with revisions incorporated) is due by 5:00 pm on **3/13/26**.

"Speak bigly and carry a soft stick."

Karl Gumerlock, ME218A

Evaluation

Performance Testing Procedures:

One or more team members will operate the robot during the performance evaluation. A competition among the class robots will take place after the final performance evaluation.

Performance Evaluation:

Performance evaluation will take place twice during the project, the first time at Checkpoint 4 and the second time at the Grading Session.

Competition:

On the night of the public presentation, a tournament will be held. **Performance during the tournament has no impact on your grade.** See 7 for the tournament brackets.

Grading Criteria:

- ☐ **Concept (10 %)** This will be based on the technical merit of the design and the implementation of all technical aspecs of your machine. Included in this grade will be the evaluation of the appropriateness of the solution, as well as innovative use of hardware, software, and physical principles.
- ☐ **Implementation (15 %)** This will be based on the prototype displayed at the evaluation session. Included in this grade will be an assessment of the physical appearance of the prototype and the quality of its construction. Particular focus is placed on craftsmanship and finished appearance.
- ☐ **Checkpoint Performance (10 %)** Based on demonstrating required functionality at **Checkpoints 1-3**.
- ☐ **Preliminary Performance (10 %)** Based on the results of the performance demonstrated during **Checkpoint 4**.
- ☐ **Performance (20 %)** Based on the results of the performance testing during the **Grading Session**.
- ☐ **TA's Evaluation (5 %)** Evaluation by each TA: whether you made use of their input before the design review, and during the course of the project.
- ☐ **Report (20 %)** This will be based on an evaluation of your written report. It will be judged on clarity of explanations, completeness and appropriateness of the documentation. Your report should be in the form of a stand-alone website and must include schematics, pseudo-code, state charts, header and code listings, dimensioned sketches/drawings showing relative scale, a complete Bill Of Materials (BOM) for

the project, as well as a 1-page description of function and a ”Gems of Wisdom for future generations of 218ers” page.

To submit your report, you must **enter the URL to your site into a Google sheet that will be made available for that purpose**. The only file types in your final report should be HTML/CSS, JPEG/PNG or other viewable bitmap image files, and PDF files. Schematics should be vector PDF fils, not bitmaps. A reasonable resolution bitmap place-holder with a link to a PDF is the best solution to readability. **Do not simply place a link to the PDF of the schematic without a viewable preview on the web page.** Do not include .doc, .docx, .xls, .xlsx, or other files that require opening an application other than a web browser. Your site should be fully functional on both desktop and tablet web browsers. **Do not embed video files directly** into your site. If you want to include video, provide a link to a video-sharing site.

It is critical that the URL of your report be entered in the Google sheet on time, so that the peer reviewing team has adequate opportunity to review it before class. Final versions of the reports, incorporating the review comments, are due by 5:00 pm on 3/13/26. Make sure to test all of your links prior to submitting your report. If the teaching team cannot open and browse your report website, then they cannot grade it!

- ☐ **Report Review (5 %)** Based on the thoroughness of your review of your partner team’s report. Read the explanations, do they make sense? Review the circuits, do they look like they should work? Could this robot realistically be built for $200? If, during grading, we find things that don’t make sense, or circuits that don’t work, we will consult your review. If your review caught them, then the partner team will lose points on their report. If the review missed it, then the reviewing team will lose points for their review. The report review should be submitted in the form of a text document submitted to Gradescope.
- ☐ **Housekeeping (5 %)** Based on the timely return of SPDL components, cleanliness of group workstations as well as the overall cleanliness of the lab. No grades will be recorded for teams who have not returned all loaned materials.
- ☐ **Peer Reviews** Completing a peer review on CATME is a **required** component of the project. These reviews are not optional, and project work will be considered incomplete unless reviews are completed by the due dates.

Team Organization

While each member of your team has principal design responsibility for a specific functional area, the experience of the teaching team is that turning team members into dedicated specialists will be a mistake in the long run. Many 218 alumni from such silo-ed teams report that they regret not sharing in all of the technical aspects of the project, feeling that they have lost out on some of the experience. The teaching team encourages you to remember that, first and foremost, *the purpose of the project is to enhance your learning of the material*. An organization that deeply involves all of the team members in all details of the design, implementation, and debugging of all subsystems will not only provide a better learning experience, it will also prevent hangups during the integration and testing phase when the team ”expert” on a specific subsystem is not available.

Mechanical Design and Robustness

Your machine must be rugged enough to survive your testing.

While the emphasis in lectures has been on electronics and software, don’t forget the mechanical aspect. Historically, project failures are often due to poor mechanical design or implementation. Pay attention to craftsmanship, and put thought into how your design supports all of the loads that your robot will be subjected to–not just when it’s operating as intended, but also when it receives bumps from other robots or humans that may also be testing on the field.

While in-class work sessions have focused largely on software implementation, keep in mind that, although computers are deterministic, the real world is not. Make sure that your software is built not just to handle

what you hope will happen, but also to deal with everything that might happen that could cause problems.

When integrating several subsystems, although it may seem (and feel) slower, it is absolutely worth your time to make sure that each subsystem is as bug-free as you can get it prior to integration. Fast is slow and slow is fast.

Preventing Disaster

It is unlikely, even given the advice in the section above, that your robot will be robust enough to survive a fall from tabletop height to the floor. To avoid the possibility of that happening, your team should create a stand/platform for your robot that raises its wheels above the surface. With this stand in place, and your robot perched upon it, if your electronics or software go haywire and your robot spins its wheels uncontrollably, it will not drive itself off of a cliff edge.

Resources

Websites:

SparkFun	Seeed Studio	Jameco	Mouser
Newark	Ponoko	Adafruit	Hackaday
DigiKey	Mmmaster-Carr	HobbyKing	ServoCity

You may also find PlantUML and PlantText helpful for creating message sequence diagrams. WaveDrom can be used for timing diagrams. Draw.io is also good for making diagrams.

Local Stores:

Anchor Electronics in Santa Clara J&M Hobby House in San Carlos
Jameco in Belmont
TAP Plastics in various locations

Gems of Wisdom:

Be sure to check out The ME218 Archive for guidance from past generations.

Team Names:

Team names are a tradition in ME218B.

Revision History

Revision 0: Initial draft. (2/4/26)