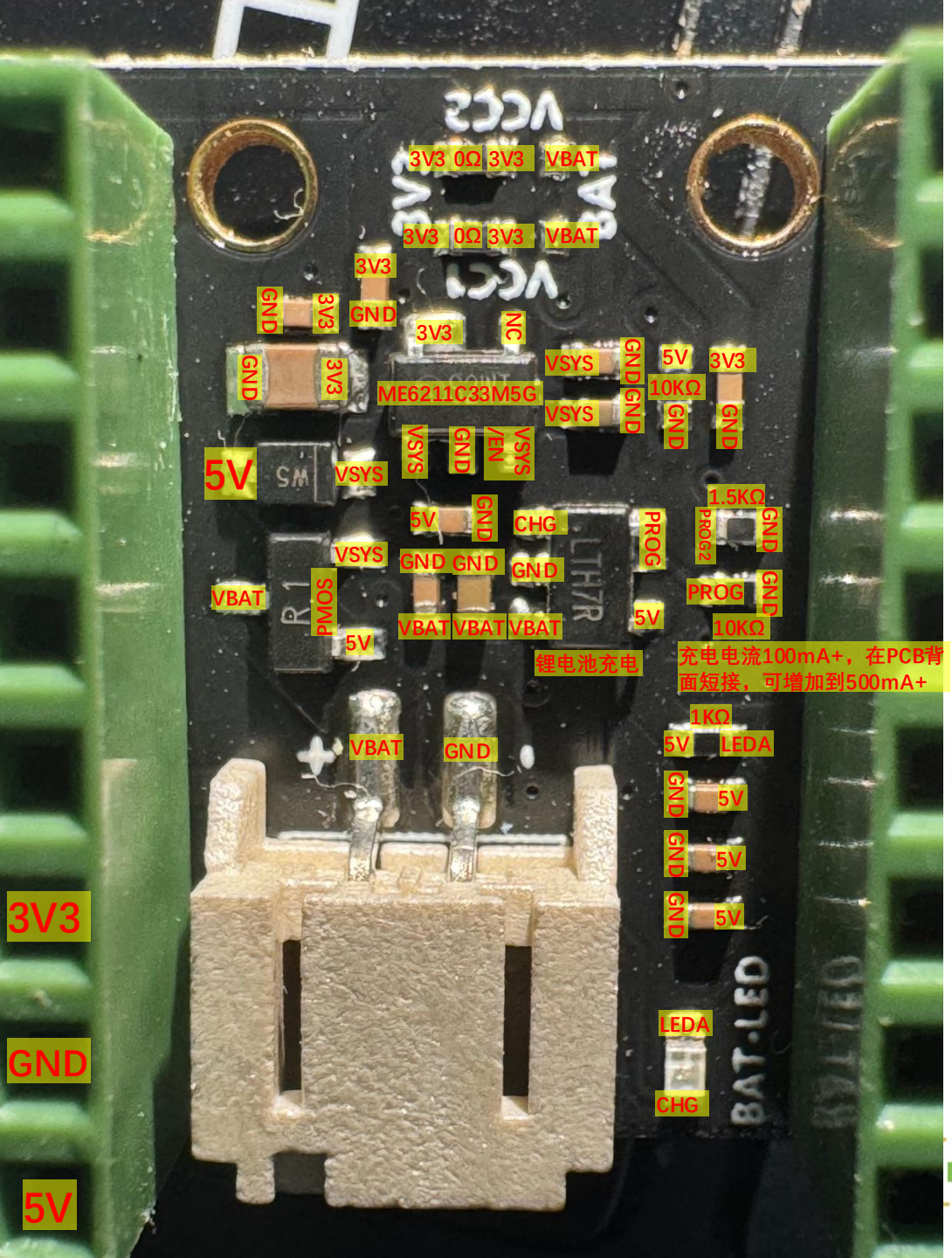

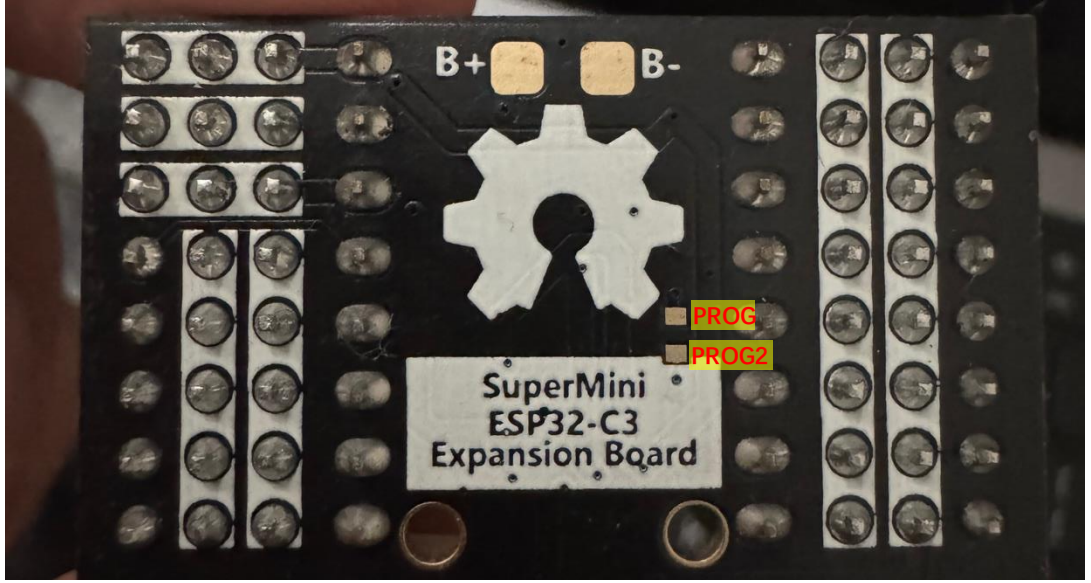

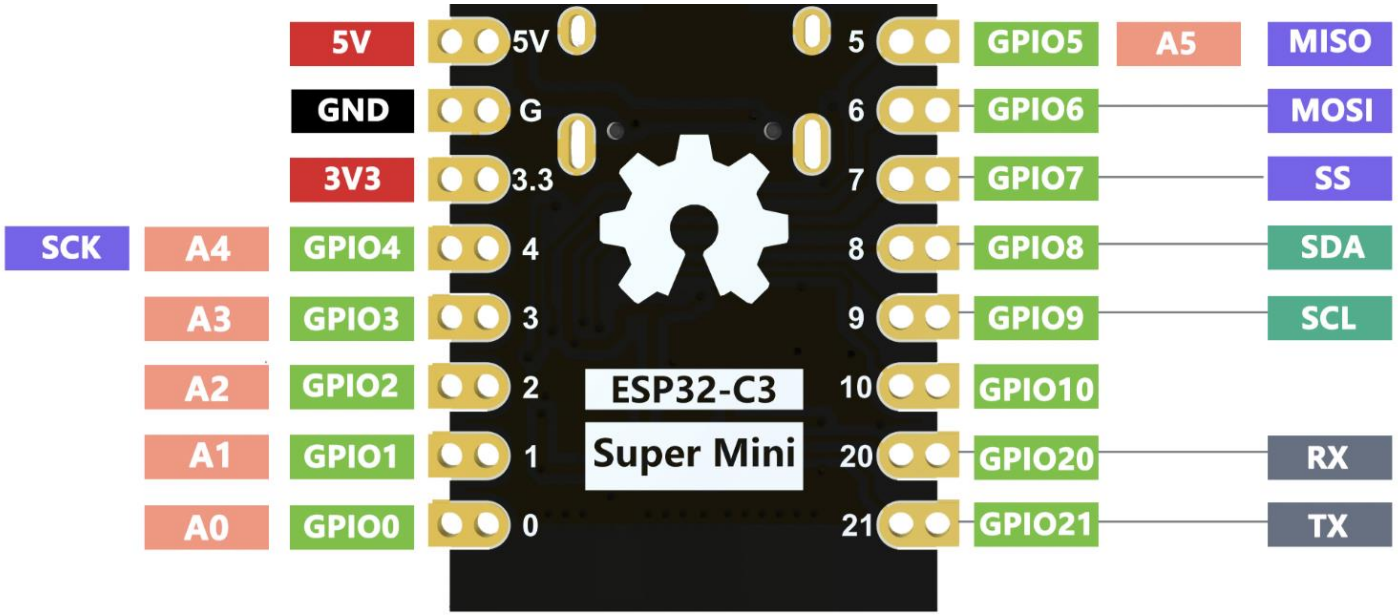

Pin No. ■ Power ■ ADC ■ SPI ■ GND ■ UART ■ Digital

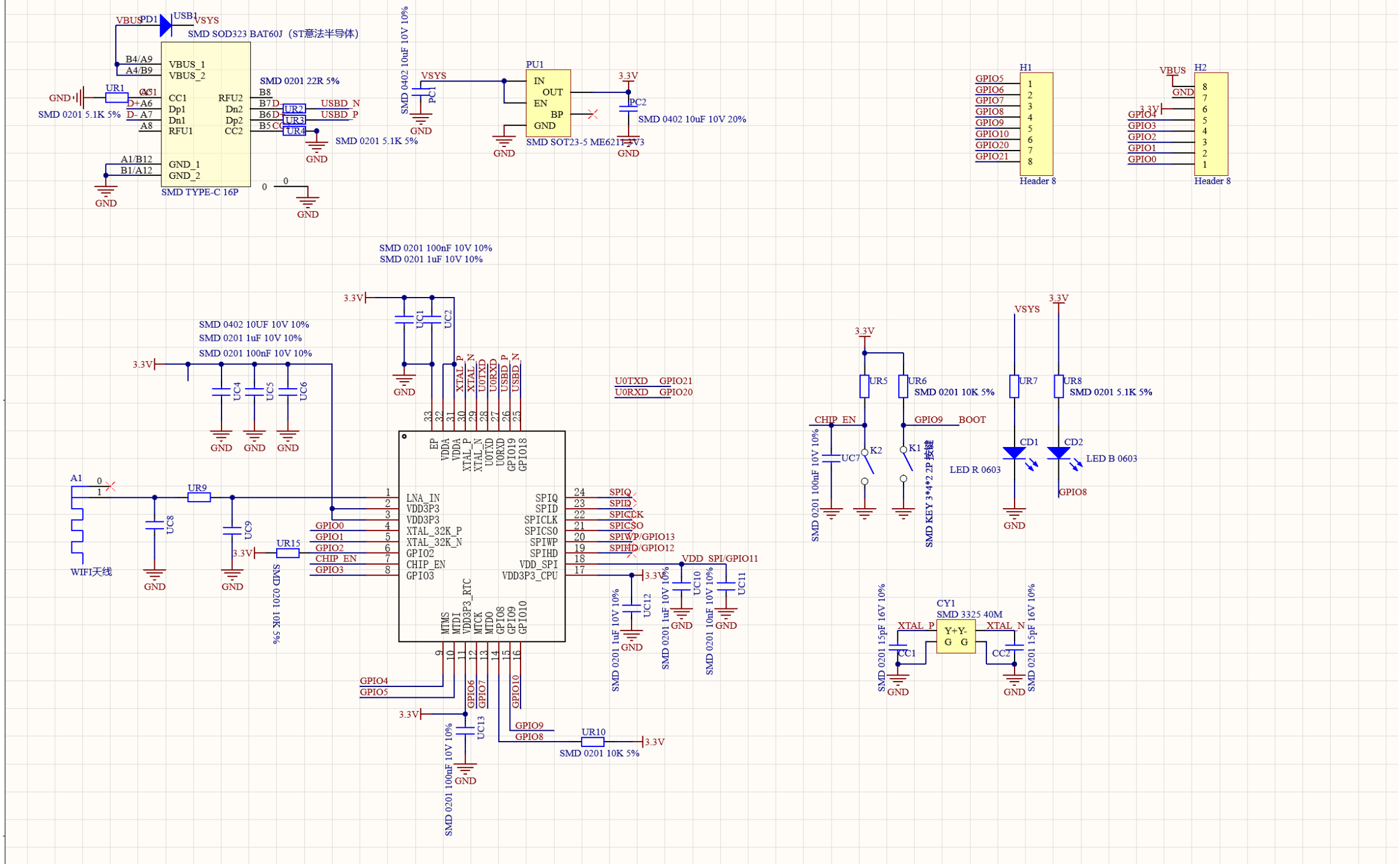
VBUS
PD1
USB1
VSYS
SMD SOD323 BAT60J（ST意法半导体）
B4/A9
A4/B9
VBUS_1
VBUS_2
UR1
GND
SMD 0201 5.1K 5%
CC1
Dp1
Dn1
RFU1
RFU2
Dn2
Dp2
CC2
SMD 0201 22R 5%
USBD_N
USBD_P
UR2
UR3
UR4
A1/B12
B1/A12
GND_1
GND_2
SMD TYPE-C 16P
SMD 0402 10uF 10V 10%
PC1
PU1
IN
OUT
EN
BP
GND
3.3V
PC2
SMD 0402 10uF 10V 20%
SMD SOT23-5 ME6211-3V3
H1
Header 8
H2
GPIO5
GPIO6
GPIO7
GPIO8
GPIO9
GPIO10
GPIO20
GPIO21
GPIO4
GPIO3
GPIO2
GPIO1
GPIO0
SMD 0201 100nF 10V 10%
SMD 0201 1uF 10V 10%
SMD 0402 10UF 10V 10%
UC1
UC2
UC4
UC5
UC6
XTAL_P
XTAL_N
U0TXD
U0RXD
USBD_P
USBD_N
U0TXD GPIO21
U0RXD GPIO20
EP
VDDA
GPIO19
GPIO18
LNA_IN
VDD3P3
XTAL_32K_P
XTAL_32K_N
CHIP_EN
SPIQ
SPID
SPICLK
SPICS0
SPIWP
SPIHD
VDD_SPI
VDD3P3_CPU
SPIWP/GPIO13
SPIHD/GPIO12
VDD_SPI/GPIO11
MTMS
MTDI
VDD3P3_RTC
MTCK
MTDO
GPIO8
GPIO9
GPIO10
A1
UR9
UC8
UC9
UR15
SMD 0201 10K 5%
WIFI天线
UC12
UC10
UC11
UC13
UR10
SMD 0201 10K 5%
UR5
UR6
UR7
UR8
SMD 0201 10K 5%
SMD 0201 5.1K 5%
CHIP_EN
GPIO9
BOOT
UC7
K2
K1
SMD KEY 3*4*2 2P 按键
CD1
CD2
LED R 0603
LED B 0603
CY1
SMD 3325 40M
Y+Y-
G G
CC1
CC2
SMD 0201 15pF 16V 10%