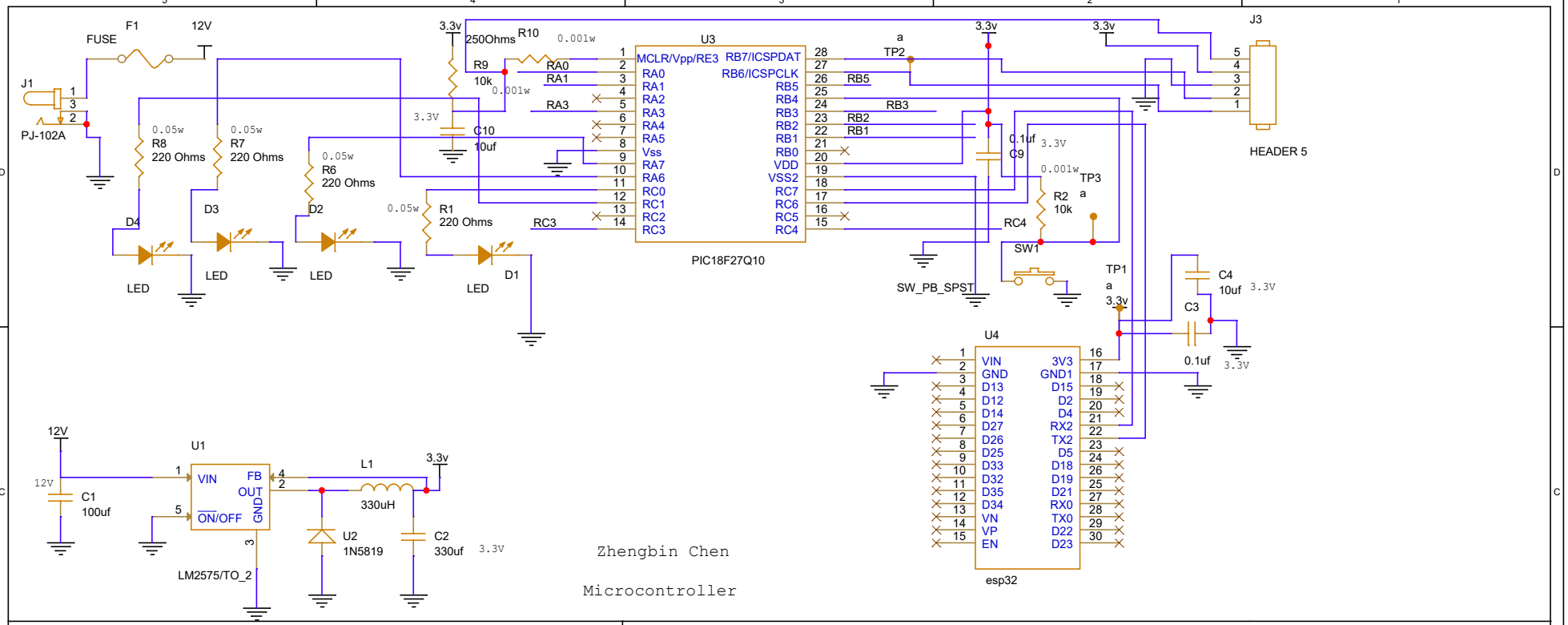

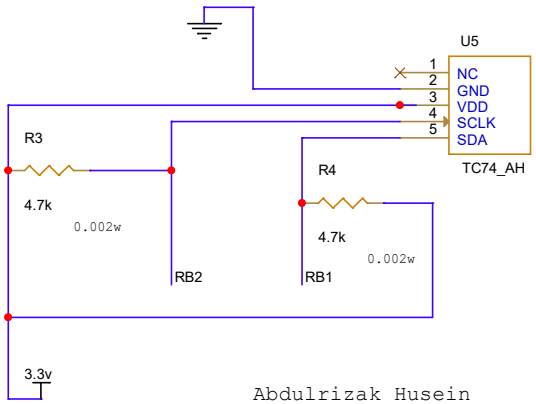

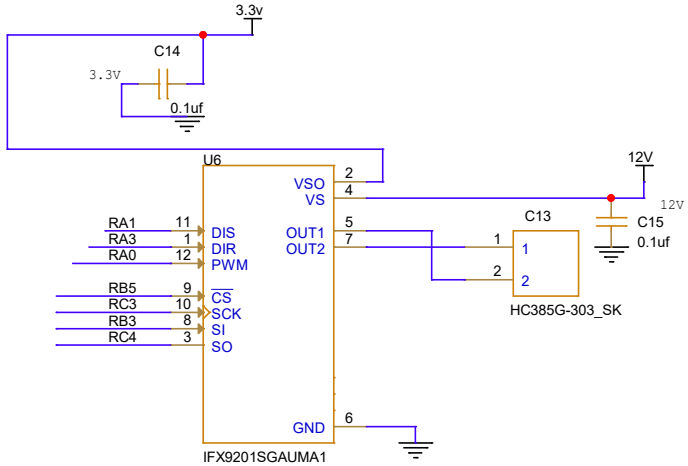

Team 303

Title <Title>		
Size Custom	Document Number <Doc>	Rev <RevCode>
Date: Monday, March 13, 2023	Sheet 1 of 1	