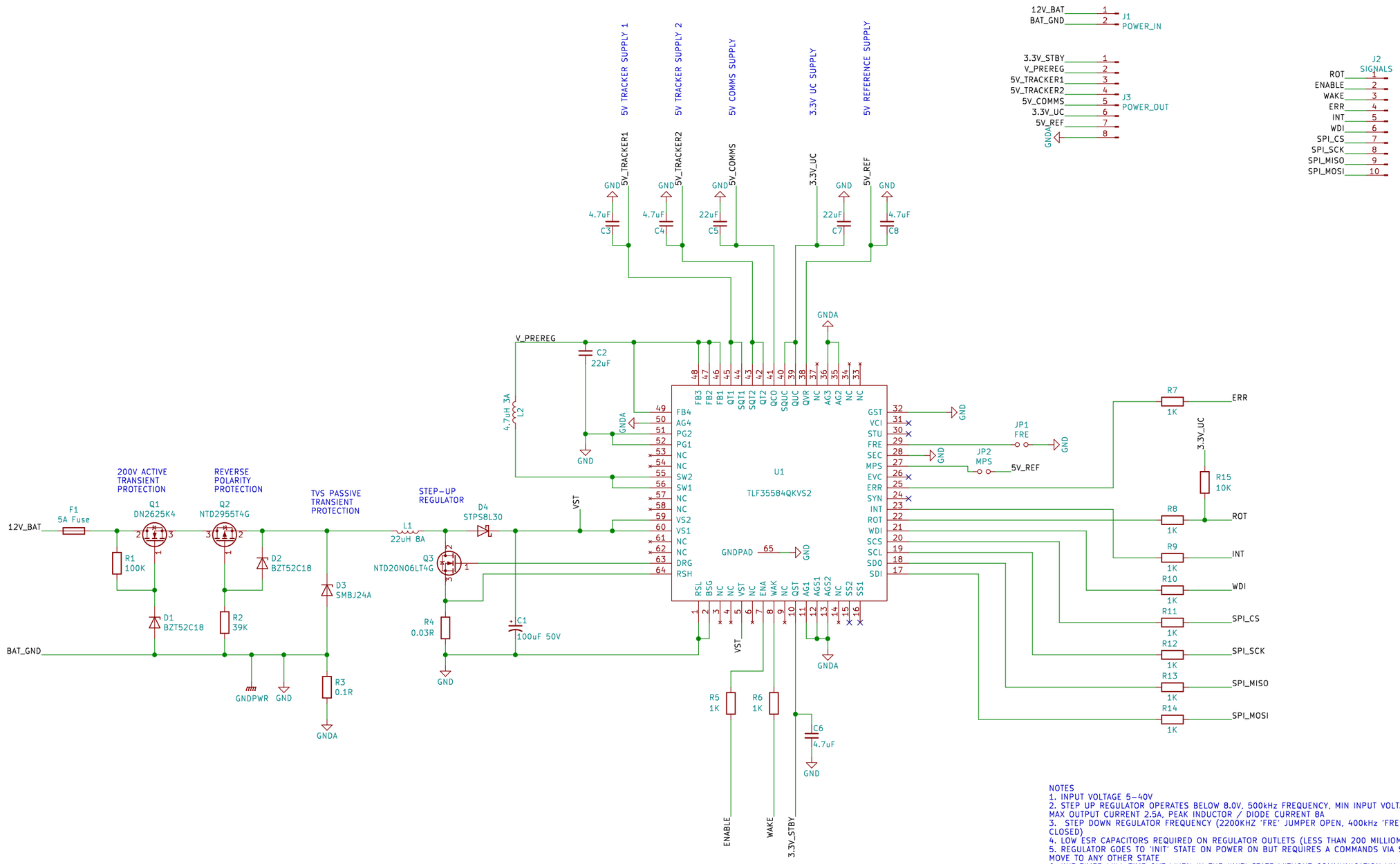

WAKE: PULSE INPUT (2V THRESHOLD, 40V TOLERANT)
OR
ENABLE: RISING EDGE (2V THRESHOLD, 40V TOLERANT)

NOTES
1. INPUT VOLTAGE 5–40V
2. STEP UP REGULATOR OPERATES BELOW 8.0V, 500kHz FREQUENCY, MIN INPUT VOLTAGE 5V, MAX OUTPUT CURRENT 2.5A, PEAK INDUCTOR / DIODE CURRENT 8A
3. STEP DOWN REGULATOR FREQUENCY (2200KHZ 'FRE' JUMPER OPEN, 400kHz 'FRE' JUMPER CLOSED)
4. LOW ESR CAPACITORS REQUIRED ON REGULATOR OUTLETS (LESS THAN 200 MILLIOMHS)
5. REGULATOR GOES TO 'INIT' STATE ON POWER ON BUT REQUIRES A COMMANDS VIA SPI TO MOVE TO ANY OTHER STATE
6. INIT TIMER WILL TIME OUT WHEN IN THE 'INIT' STATE WITHOUT COMMUNICATION VIA SPI. WHEN IT TIMES OUT FOR THE THIRD TIME IT GOES TO THE 'FAILSAFE' STATE AND SWITCHES OFF THE LDO OUTPUTS
7. REGULATOR GOES TO THE 'INIT' STATE IF ON A WATCHDOG ERROR OR ON LOSS OF THE ERROR MONITOR SIGNAL. DEFAULT WATCHDOG SIGNAL ARE VIA SPI. ERROR MONITORING REQUIRES 10 – 45 kHz 3.3V SIGNAL AT THE 'ERR' PIN TO REMAIN HEALTHY
8. 'WTO' PIN IN THE WATCHDOG INPUT
9. 'MPS' JUMPER DISABLES 'INIT' STATE TIMER AND RESET OUTPUT TO THE UC ON WATCHDOG OR ERROR MONITORING ERRORS

rusefi.com

Sheet: /
File: TLF35584 breakout.sch

Title: rusEFI – TLF35584 breakout board

Size: A3	Date: 2019-01-10	Rev: DRAFT
KiCad E.D.A. kicad (5.0.2)-1		Id: 1/1