CESSNA™ 100 SERIES
Service Manual – 1962 and Prior
Table of Contents

Click on a link below

1. GENERAL DESCRIPTION
2. GROUND HANDLING, SERVICING, LUBRICATION & INSPECTION
3. FUSELAGE
4. AIRFRAME
5. LANDING GEAR
6. AILERON CONTROL SYSTEM
7. FLAP CONTROL SYSTEMS
7A. FLAP CONTROL SYSTEM (Electric)
8. ELEVATOR CONTROL SYSTEMS
9. ELEVATOR TRIM TAB CONTROL SYSTEMS
10. RUDDER CONTROL SYSTEMS
11. STABILIZER CONTROL SYSTEM
12. POWERPLANT
12A. MODEL 185 POWERPLANT
13. FUEL SYSTEMS
14. PROPELLERS
14A. PROPELLERS (MODEL BHC-C2YF-1)
15. HEATING, VENTILATION
16. INSTRUMENTS & INSTRUMENT SYSTEMS
17. ELECTRICAL SYSTEMS
18. ELECTRONIC SYSTEMS
19. STRUCTURAL REPAIR
20. PAINTING

TOOLBAR HELP

REVISION INFO

Copyright 2001-2002 McCurtain Technology Group. All Rights Reserved.

CESSNA is a trademark of the Cessna Aircraft Company.

TOOLBAR HELP

The **Print** button allows you to print any specific page(s).

The **Show/Hide Navigation Pane** button opens or closes the lefthand column of bookmarks or thumbnails. Click on this button and the Actual Size or Fit Width button to enlarge text for reading.

The **Hand** tool enables you to move a single document page on the screen when the page does not fit within the main window. Drag the hand tool in the direction you want to move the page. A pointing hand indicates a hyperlink is present at that location.

The **Zoom** tool magnifies and reduces the page display. The "+" zooms in. To view the "-" and zoom out, choose the Zoom tool and hold down the Ctrl key. Click on the hand tool and the Actual Size button to exit and resize the page.

The **First Page** button moves the document to the first page.

Previous Page – moves you back one page in the document.

Next Page – moves you forward one page in the document.

The **Last Page** button moves the document to the last page.

The **Go Back** and **Go Forward** buttons retrace your steps through a document, moving to each view in the order visited.

The **Actual Size** button displays the page at 100%.

The **Fit Page** button scales the page to fit within the window.

The **Fit Width** button scales the page to fill the width of the window.

The lower toolbar (shown below) provides some of the same functions but provides some additional information. The page number matches the page number printed on the current document page (12-1). The zoom level is also shown (100%). The down arrow button to the right of the zoom level allows for zoom adjustment. The double arrow button on the far left will open/close the navigation pane. The buttons on both sides of the page number provide the same paging functions as the upper toolbar paging buttons.

For additional help, click on the **Help** command on the right side of the top command line. Click on the **Go Back** button to return to the manual.

Cessna®

150, 172, 175, 180,
182, AND 185 SERIES

100 - SERIES

SERVICE MANUAL

1962 AND PRIOR

THIS SUPERSEDES ALL PREVIOUS SINGLE ENGINE SERVICE MANUALS

1 FEBRUARY 1962

D138-13 - RAND - 500 - 4-72

INSERT LATEST CHANGED PAGES. DESTROY SUPERSEDED PAGES.

LIST OF EFFECTIVE PAGES

Note: The portion of the text affected by the change is indicated by a vertical line in the outer margins of the page.

Dates of issue for original and changed pages are:

Original . . . 0 . . . 1 February 1962

TOTAL NUMBER OF PAGES IN THIS PUBLICATION IS 504 CONSISTING OF THE FOLLOWING:

Page No.	Change No.	Page No.	Change No.
Title	0	11-1 thru 11-8	0
A	0	12-1 thru 12-2	0
i thru iv	0	12-2A thru 12-2B	0
1-1 thru 1-8	0	12-3 thru 12-8	0
2-1 thru 2-19	0	12-8A thru 12-8B	0
2-20 Blank	0	12-9 thru 12-12	0
3-1 thru 3-10	0	12-12A thru 12-12B	0
3-10A thru 3-10B	0	12-13 thru 12-31	0
3-11 thru 3-14	0	12-31A thru 12-31B	0
3-14A thru 3-14B	0	12-32 thru 12-36	0
3-15 thru 3-22	0	12A-1 thru 12A-6	0
4-1 thru 4-15	0	12A-6A thru 12A-6B	0
4-16 Blank	0	12A-7 thru 12A-12	0
5-1 thru 5-18	0	13-1 thru 13-2	0
5-18A thru 5-18B	0	13-2A thru 13-2B	0
5-19 thru 5-20	0	13-3 thru 13-9	0
5-20A thru 5-20B	0	13-9A thru 13-9B	0
5-21 thru 5-24	0	13-10 thru 13-17	0
5-24A thru 5-24B	0	13-17A thru 13-17B	0
5-25 thru 5-30	0	13-18 thru 13-19	0
5-30A thru 5-30B	0	13-20 Blank	0
5-31 thru 5-39	0	14-1 thru 14-14	0
5-40 Blank	0	14A-1 thru 14A-4	0
6-1 thru 6-12	0	15-1 thru 15-10	0
7-1 thru 7-7	0	16-1 thru 16-26	0
7-8 Blank	0	17-1 thru 17-143	0
7A-1 thru 7A-5	0	17-144 Blank	0
7A-6 Blank	0	18-1	0
8-1 thru 8-7	0	18-2 Blank	0
8-8 Blank	0	19-1 thru 19-36	0
9-1 thru 9-6	0	20-1 thru 20-3	0
10-1 thru 10-12	0	20-4 Blank	0

Upon receipt of the second and subsequent changes to this book, personnel responsible for maintaining this publication in current status should ascertain that all previous changes have been received and incorporated.

* The asterisk indicates pages changed, added, or deleted by the current change.

SERVICE MANUAL TITLE 100 SERIES 1962 AND PRIOR

SERVICE MANUAL NUMBER D138-13 DATED 1 FEBRUARY 1962

TEMPORARY CHANGE NO. 1

DATED: 18 OCTOBER 1977

This change consists of the following pages, which replace existing pages in the service manual and supersedes aerofiche information.

SERVICE MANUAL	FICHE/FRAME
page 12-1	
page 12-2	

File this page following "List of Effective Pages" in the front of your service manual as a record of pages affected by this temporary change.

This page intentionally left blank.

FOREWORD

This manual contains recommended procedures and instructions for ground handling, servicing and maintaining Cessna single-engine commercial aircraft prior to 1963 models. These include the Model 150, 172, 175, 180, 182, and 185. Although not specifically written for earlier models which have been discontinued, much of the information can be used as a guide for maintenance of the Model 120, 140 and 170. Besides serving as a reference for the experienced mechanic, this book also covers step-by-step procedure for the less experienced man. This manual should be kept in a handy place for ready reference. If properly used, it will better enable the mechanic to maintain Cessna single-engine aircraft and thereby establish a reputation for reliable service.

The material presented in this manual is divided into twenty sections. All sections and their major paragraph titles are listed in the table of contents at the front of the book. A section table of contents, listing each paragraph and the page on which it appears, is located at the front of each individual section. All information, illustrations, and specifications contained in this manual are based on the latest information available at the time of publication.

This information is supplemented and kept current by service letters and service news letters published by Cessna Aircraft Company. This information goes to all Cessna Dealers so that they have the latest authoritative information for servicing Cessna Airplanes. Therefore, Cessna recommends that all Cessna owners utilize the Cessna-trained Dealer Service Organization to the fullest, to receive the benefit of their knowledge and experience.

This page intentionally left blank.

TABLE OF CONTENTS

SECTION 1 - GENERAL DESCRIPTION Page

General Description 1-1
Reference Stations 1-5

SECTION 2 - GROUND HANDLING, SERVICING, LUBRICATION AND INSPECTION

Ground Handling 2-1
Servicing 2-4
Cleaning 2-6
Lubrication 2-6
Inspection 2-13

SECTION 3 - FUSELAGE

Windows and Windshields 3-1
Cabin Doors 3-4
Cabin Door Latches 3-5
Baggage Doors. 3-9
Seats 3-9
Cabin Upholstery. 3-9
Headliner and Cabin Top Soundproofing 3-16
Carpeting 3-16
Baggage Compartment Upholstery 3-16
Safety Belts 3-16
Cargo Tie-Downs 3-20

SECTION 4 - AIRFRAME

Wings 4-1
Wing Struts 4-5
Fin 4-7
Horizontal Stabilizer 4-12

SECTION 5 - LANDING GEAR

Landing Gear 5-1
Main Gear. 5-3
Main Wheel and Axle 5-4
Main Wheels (Goodyear) 5-5
Main Wheels (Cleveland) 5-10
Main Wheel Alignment 5-16
Crosswind Wheels 5-16
Nose Gear. 5-16
Nose Wheel 5-26
Nosewheel Steering System 5-29
Tailgear 5-30B
Anti-Swivel Mechanism (Model 185) . . . 5-30B
Tailwheel 5-30B
Speed Fairings. 5-31
Brake System 5-33
Parking Brake Systems. 5-39

SECTION 6 - AILERON CONTROL SYSTEM

Aileron Control System 6-1

SECTION 7 - FLAP CONTROL SYSTEMS

Flap Control Systems. 7-1

SECTION 7A - FLAP CONTROL SYSTEM (ELECTRIC)

Flap Control System (Electric) 7A-1

SECTION 8 - ELEVATOR CONTROL SYSTEMS

Elevator Control Systems 8-1

SECTION 9 - ELEVATOR TRIM TAB CONTROL SYSTEMS

Elevator Trim Tab Control Systems 9-1

SECTION 10 - RUDDER CONTROL SYSTEMS

Rudder Control Systems 10-1

SECTION 11 - STABILIZER CONTROL SYSTEM

Stabilizer Trim Control System 11-1

SECTION 12 - POWERPLANT

Description 12-1
Trouble Shooting. 12-3
Engine Removal 12-6
Engine Installation 12-7
Extreme Weather Maintenance. 12-7
Starting Systems 12-9
Engine Controls 12-12
Ignition 12-15
Engine Cowling 12-32
Baffles 12-32
Engine Mounts. 12-32
Oil System 12-34
Exhaust System 12-36

SECTION 12A - MODEL 185 POWERPLANT

Description 12A-1
Trouble Shooting 12A-3
Engine Removal 12A-5
Engine Installation 12A-6
Extreme Weather Maintenance 12A-6
Starting System 12A-7
Fuel Injection System 12A-7
Engine Controls 12A-10
Ignition 12A-11
Engine Cowling 12A-11
Baffles 12A-11
Engine Mount 12A-12
Oil System 12A-12
Exhaust System 12A-12

TABLE OF CONTENTS (Cont)

SECTION 13 - FUEL SYSTEMS

Fuel Systems 13-1

SECTION 14 - PROPELLERS

Propellers 14-1
Fixed Pitch Propellers 14-2
Hartzell Propeller 14-5
McCauley Propeller 14-9
Propeller Governor 14-12

SECTION 14A - PROPELLERS (MODEL BHC-C2YF-1)

Propellers (Model BHC-C2YF-1) 14A-1

SECTION 15 - HEATING, VENTILATING

Heating 15-1
Cabin Air Ventilation 15-1

SECTION 16 - INSTRUMENTS AND INSTRUMENT SYSTEMS

General 16-1
Instrument Panels 16-1
Pitot and Static Systems 16-4
Vacuum Systems 16-11
Engine Indicators 16-18
Magnetic Compass 16-25
Stall Warning System 16-26
Turn-and-Bank Indicator 16-26

SECTION 17 - ELECTRICAL SYSTEMS

Electrical Power Supply System 17-2
Battery and External Power System 17-2
Generator Power System 17-10
Aircraft Lighting System 17-14
Stall Warning Circuit 17-24
Pitot and Stall Warning Heat Circuits. . . .17-24
Index of Electrical Wiring Diagrams 17-25
Symbols Chart 17-27

SECTION 18 - ELECTRONIC SYSTEMS

Deleted. See the "Cessna Electronics Manual and Parts Catalog.

SECTION 19 - STRUCTURAL REPAIR

Repair Criteria 19-1
Equipment and Tools 19-1
Control Surface Balancing 19-3
Skin Repair Materials 19-7
Wing 19-8
Wing Skin 19-8
Wing Ribs 19-8
Wing Spars 19-8
Ailerons 19-8
Flaps 19-24
Tail Group 19-26
Vertical Fin and Dorsal Area 19-26
Stabilizer 19-26
Elevators and Rudder 19-26
Fuselage 19-27
Bulkheads 19-27
Landing Gear Bulkheads 19-30
Replacement of Hi-Shear Rivets 19-30
Firewall Damage 19-30
Replacement of Portions of Skin Panels . .19-30
Engine Mount 19-36
Baffles 19-36
Engine Cowling 19-36
Royalite Repairs 19-36
Fiberglas Repairs 19-36

SECTION 20 - PAINTING

Painting 20-1
Enmar 27H Series Lacquer 20-1
Enmar 82A Series Vinyl 20-1
Hi-Visibility Paint 20-3
Fiberglas Speed Fairings 20-3

SECTION 1

GENERAL DESCRIPTION

1-1. GENERAL DESCRIPTION. The Cessna single-engine aircraft described in this manual are similar in that all models are of a high-wing monoplane configuration, employing patented spring-steel main landing gear struts, opposed air-cooled Continental engines, and all-metal semi-monocoque airframe construction. Except for the Model 150 series aircraft, which have four-cylinder engines, these aircraft use six-cylinder engines. The Model 150 is two-place and all others except the Model 185 are four-place. The Model 185 is a multi-purpose aircraft, designed as a one-, two-, four-, or six-place aircraft. An auxiliary seat may be installed in most models. The Models 180 and 185 are equipped with tailwheels and the others have a tricycle-type landing gear. Beginning in 1960, Models 172, 175, and 182 series aircraft were designed with a marked degree of fin and rudder sweep-back. Other refinements, such as a lower ground attitude, wider main landing gear, engine and propeller model changes, and internal and external styling, have been made from time to time.

Leading particulars of each model, with dimensions based on gross weight, are given in the following charts. If these dimensions are used for constructing a hangar or computing clearances, remember that such factors as nose strut inflation, tire inflation, and load distribution may result in some dimensions that are considerably different from those listed. Control surface travels are listed in nominal degrees; refer to the applicable section of this manual for specific travels and tolerances.

MODEL 150

DESIGN GROSS WEIGHT	1500 lb
TOTAL FUEL CAPACITY	26 gal
OIL CAPACITY	6 qt
ENGINE MODEL (Continental)	O-200-A
HP RATING	100
RATED RPM	2750
MAIN WHEELS	5:00 x 5
Pressure	30 psi
NOSE WHEEL	5:00 x 5
Pressure	30 psi
AILERON TRAVEL	
Up	20°
Down	15°
FLAP TRAVEL	39°
RUDDER TRAVEL	
Right	16°
Left	16°
ELEVATOR TRAVEL	
Up	25°
Down	15°
ELEVATOR TRIM TAB TRAVEL	
Up	10°
Down	20°
PRINCIPAL DIMENSIONS	
Wing Span (prior to 1962)	33'4"
Wing Span (1962 & on)	33'6"
Tail Span	10'
Length	*21'6"
Height	**6'11"
Track Width	6'5"
BATTERY LOCATION	
Aft of baggage compartment	
SERIAL NUMBERS	
1959	17001 thru 17683
1960	17684 thru 17999 & 59001 thru 59018
1961 (150A)	15059019 thru 15059350
1962 (150B)	15059351 & on

*If bullet-shaped spinner is installed, add approximately 6" to length.
**If rotating beacon is installed on vertical fin, add approximately 3" to height.

MODEL 172

DESIGN GROSS WEIGHT	
Prior to 1962	2200 lb
1962 & on	2250 lb
TOTAL FUEL CAPACITY	42 gal
OIL CAPACITY	8 qt
ENGINE MODEL (Continental)	
Prior to 1960	O-300-A
1960 & on	O-300-C
1961 & on (Skyhawk)	O-300-D
HP RATING	145
RATED RPM	2700
MAIN WHEELS	6:00 x 6
Pressure	23 psi
NOSE WHEEL	5:00 x 5
Pressure (tube type tire)	26 psi
Pressure (tubeless tire)	35 psi
AILERON TRAVEL	
Up	20°
Down	15°
FLAP TRAVEL	39°
RUDDER TRAVEL	
Right	*16°
Left	*16°
ELEVATOR TRAVEL	
Up	28°
Down	26°
ELEVATOR TRIM TAB TRAVEL	
Up	28°
Down	13°
PRINCIPAL DIMENSIONS	
Wing Span (prior to 1962)	36'
Wing Span (1962 & on)	36'2"
Tail Span	10'8"
Length (prior to 1960)	25'
Length (1960 & on)	26'6"
Height (prior to 1960)	**8'6"
Height (1960)	**8'4"
Height (1961 & on)	**8'
Track Width	7'2"
BATTERY LOCATION	
Forward left side of firewall	
SERIAL NUMBERS	
1956	28000 thru 29174
1957	29175 thru 29999 & 36000 thru 36215
1958	36216 thru 36965
1959	36966 thru 36999 & 46001 thru 46754
1960 (172A)	46755 thru 47746
1961 (172B)	17247747 thru 17248734
1962 (172C)	17248735 & on

*Rudder travel on swept tails measured parallel to water line. When measuring perpendicular to hinge line, equivalent is 17°44'.

**If rotating beacon is installed on vertical fin, add approximately 3" to height.

MODEL 175

DESIGN GROSS WEIGHT	
Prior to 1962	2350 lb
1962 & on	2450 lb
TOTAL FUEL CAPACITY	52 gal
OIL CAPACITY	10 qt
ENGINE MODEL (Continental)	
Prior to 1960	GO-300-A
1960 & on	GO-300-C
1961 (Skylark)	GO-300-D
1962 & on (Skylark)	GO-300-E
HP RATING	175
RATED RPM (Crankshaft)	3200
MAIN WHEELS	6:00 x 6
Pressure	23 psi
NOSE WHEEL	5:00 x 5
Pressure (tube type tire)	26 psi
Pressure (tubeless tire)	35 psi
AILERON TRAVEL	
Up	20°
Down	15°
FLAP TRAVEL	39°

MODEL 175 (Cont)

RUDDER TRAVEL	
Right	*16°
Left	*16°
ELEVATOR TRAVEL	
Up	28°
Down	26°
ELEVATOR TRIM TAB TRAVEL	
Up	28°
Down	13°
PRINCIPAL DIMENSIONS	
Wing Span (prior to 1962)	36'
Wing Span (1962 & on)	36'2"
Tail Span	10'8"
Length (prior to 1960)	25'
Length (1960 & on)	26'6"
Height (prior to 1960)	**8'6"
Height (1960 & on)	**8'
Track Width	7'2"
BATTERY LOCATION	
Aft of baggage compartment	
SERIAL NUMBERS	
1958	55001 thru 55703
1959	55704 thru 56238
1960 (175A)	56239 thru 56777
1961 (175B)	17556778 thru 17557002
1962 (175C)	17557003 & on

*Rudder travel on swept tails measured paralled to water line. When measuring perpendicular to hinge line, equivalent is 17°44'.

**If rotating beacon is installed on vertical fin, add approximately 3" to height.

MODEL 180

DESIGN GROSS WEIGHT	
Prior to 1957	2550 lb
1957 & on	2650 lb
TOTAL FUEL CAPACITY (prior to 1957)	60 gal
TOTAL FUEL CAPACITY (1957 & on)	65 gal
OIL CAPACITY	12 qt
ENGINE MODEL (Continental)	
Prior to 1955	O-470-A
1955	O-470-J
1956 thru 1959	O-470-K
1960 & 1961	O-470-L
1962 & on	O-470-R
HP RATING	
O-470-A and -J	225
O-470-K, -L, and -R	230
RATED RPM	
O-470-A, -K, -L, and R	2600
O-470-J	2550
MAIN WHEELS	6:00 x 6
Pressure	28 psi
TAILWHEEL	8:00 S.C.
Pressure	35 psi
AILERON TRAVEL	
Up	20°
Down	15°
FLAP TRAVEL	39°
RUDDER TRAVEL	
Right	24°
Left	24°
ELEVATOR TRAVEL	
Up	*25°
Down	*23°
STABILIZER TRAVEL (prior to 1960)	
Up	1°50'
Down	8°20'
STABILIZER TRAVEL (1960 & on)	
Up	0°45'
Down	8°45'
PRINCIPAL DIMENSIONS	
Wing Span (prior to 1962)	36'
Wing Span (1962 & on)	36'2"
Tail Span	10'10"
Length	25'6"
Fin Height	**7'6"
Track Width	7'8"
BATTERY LOCATION	
Aft of baggage compartment	
SERIAL NUMBERS	
1953	30000 thru 30639
1954	30640 thru 31260
1955	31261 thru 32150
1956	32151 thru 32661
1957 (180A)	32662 thru 32999 & 50001 thru 50105
1958 (180A)	50106 thru 50355
1959 (180B)	50356 thru 50661
1960 (180C)	50662 thru 50911
1961 (180D)	18050912 thru 18051063
1962 (180E)	18051064 & on

*With stabilizer full down.

**If rotating beacon is installed on vertical fin, add approximately 3" to height.

MODEL 182

DESIGN GROSS WEIGHT	
Prior to 1957	2550 lb
1957 thru 1961	2650 lb
1962 & on	2800 lb
TOTAL FUEL CAPACITY (prior to 1957)	60 gal
TOTAL FUEL CAPACITY (1957 & on)	65 gal
OIL CAPACITY	12 qt
ENGINE MODEL (Continental)	
Prior to 1962	O-470-L
1962 & on	O-470-R
HP RATING	230
RATED RPM	2600
MAIN WHEELS	6:00 x 6
Pressure (prior to 1962)	28 psi
Pressure (1962 & on)	32 psi
NOSE WHEEL	5:00 x 5
Pressure (tube type tire)	29 psi
Pressure (tubeless tire)	45 psi
AILERON TRAVEL	
Up	20°
Down	15°
FLAP TRAVEL	39°
RUDDER TRAVEL	
Right	*24°
Left	*24°
ELEVATOR TRAVEL (prior to 1962)	
Up	**25°
Down	**23°
ELEVATOR TRAVEL (1962 & on)	
Up	26°
Down	17°
STABILIZER TRAVEL (prior to 1960)	
Up	1°50'
Down	8°20'
STABILIZER TRAVEL (1960 & 1961)	
Up	0°45'
Down	8°45'
ELEVATOR TRIM TAB TRAVEL (1962 & on)	
Up	25°
Down	15°
PRINCIPAL DIMENSIONS	
Wing Span (prior to 1962)	36'
Wing Span (1962 & on)	36'2"
Tail Span	10'10"
Length (prior to 1960)	25'4"
Length 1960 & 1961)	27'4"
Length (1962 & on)	27'9"
Height (1956)	***9'3"
Height (1957 thru 1960)	***8'6"
Height (1961)	***7'5"
Height (1962 & on)	***7'10"
Track Width (1956)	7'8"
Track Width (1957 thru 1961)	8'2"
Track Width (1962 & on)	7'11"
BATTERY LOCATION	
Aft of baggage compartment	
SERIAL NUMBERS	
1956	33000 thru 33842
1957 (182A)	33843 thru 34753
1958 (182A)	34754 thru 34999 & 51001 thru 51556
1959 (182B)	51557 thru 52358
1960 (182C)	52359 thru 53007
1961 (182D)	18253008 thru 18253598
1962 (182E)	18253599 & on

*Rudder travel on swept tails measured parallel to water line. When measuring perpendicular to hinge line, equivalent is 27°13'.
**With stabilizer full down.
***If rotating beacon is installed on vertical fin, add approximately 3" to height.

MODEL 185

DESIGN GROSS WEIGHT	3200 lb
TOTAL FUEL CAPACITY	65 gal
OIL CAPACITY	12 qt
ENGINE MODEL (Continental)	IO-470-F
HP RATING	260
RATED RPM	2625
MAIN WHEELS	*6:00 x 6
Pressure	*35 psi
TAILWHEEL	10:00 x 3.50-4
Pressure	45 psi
AILERON TRAVEL	
Up	20°
Down	15°
FLAP TRAVEL	39°
RUDDER TRAVEL	
Right	24°
Left	24°
ELEVATOR TRAVEL	
Up	**25°
Down	**23°
STABILIZER TRAVEL	
Up	0°45'
Down	8°30'
PRINCIPAL DIMENSIONS	
Wing Span (prior to 1962)	36'
Wing Span (1962 & on)	36'2"
Tail Span	10'10"
Length	25'6"
Fin Height (including rotating beacon)	7'9"
Track Width	7'7"
BATTERY LOCATION	
Aft of baggage compartment	
SERIAL NUMBERS	
1961	185-0001 thru 185-0237
1962 (185A)	185-0238 & on

*8:00 x 6 tires are also available. Inflate to 25 psi.
**With stabilizer full down.

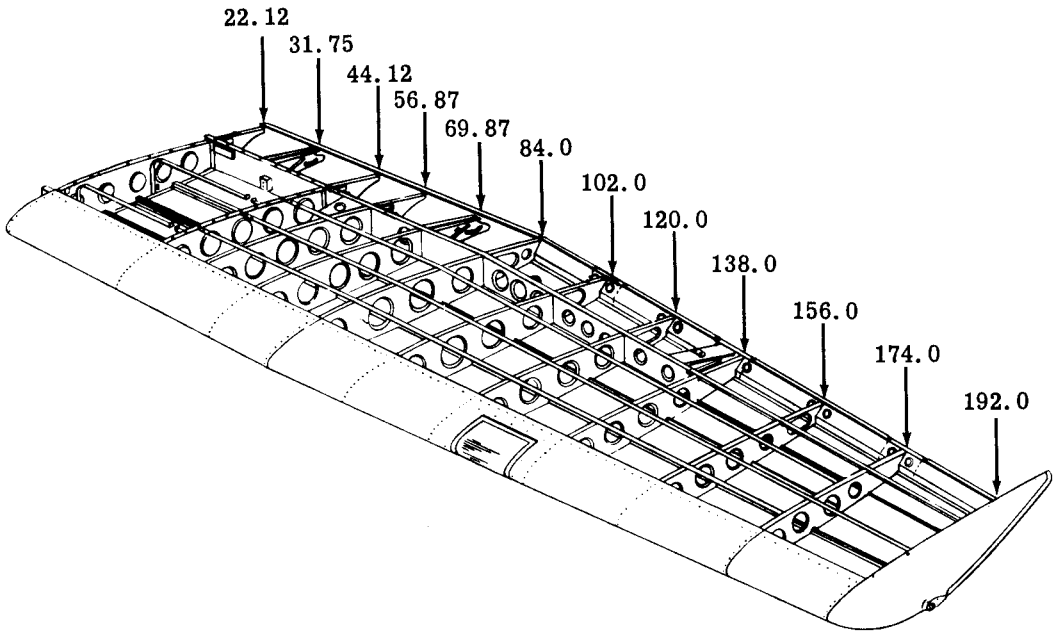

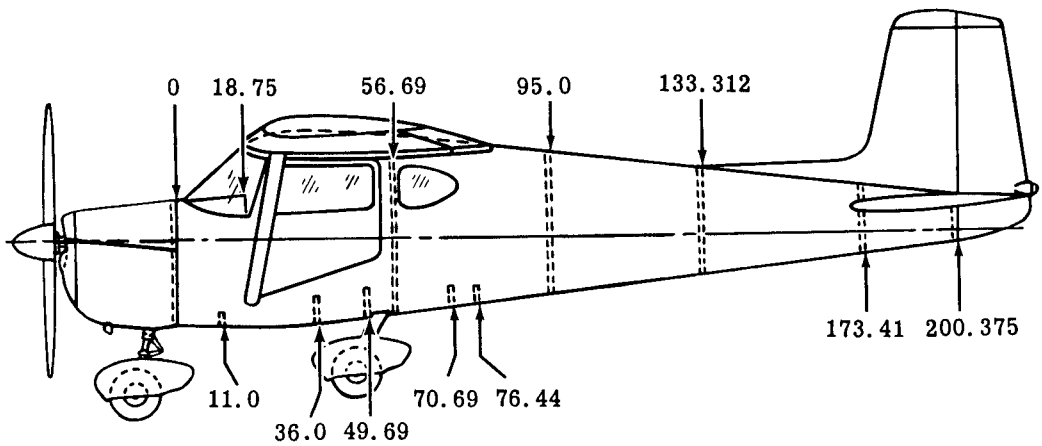

Figure 1-1. Reference Stations - Model 150

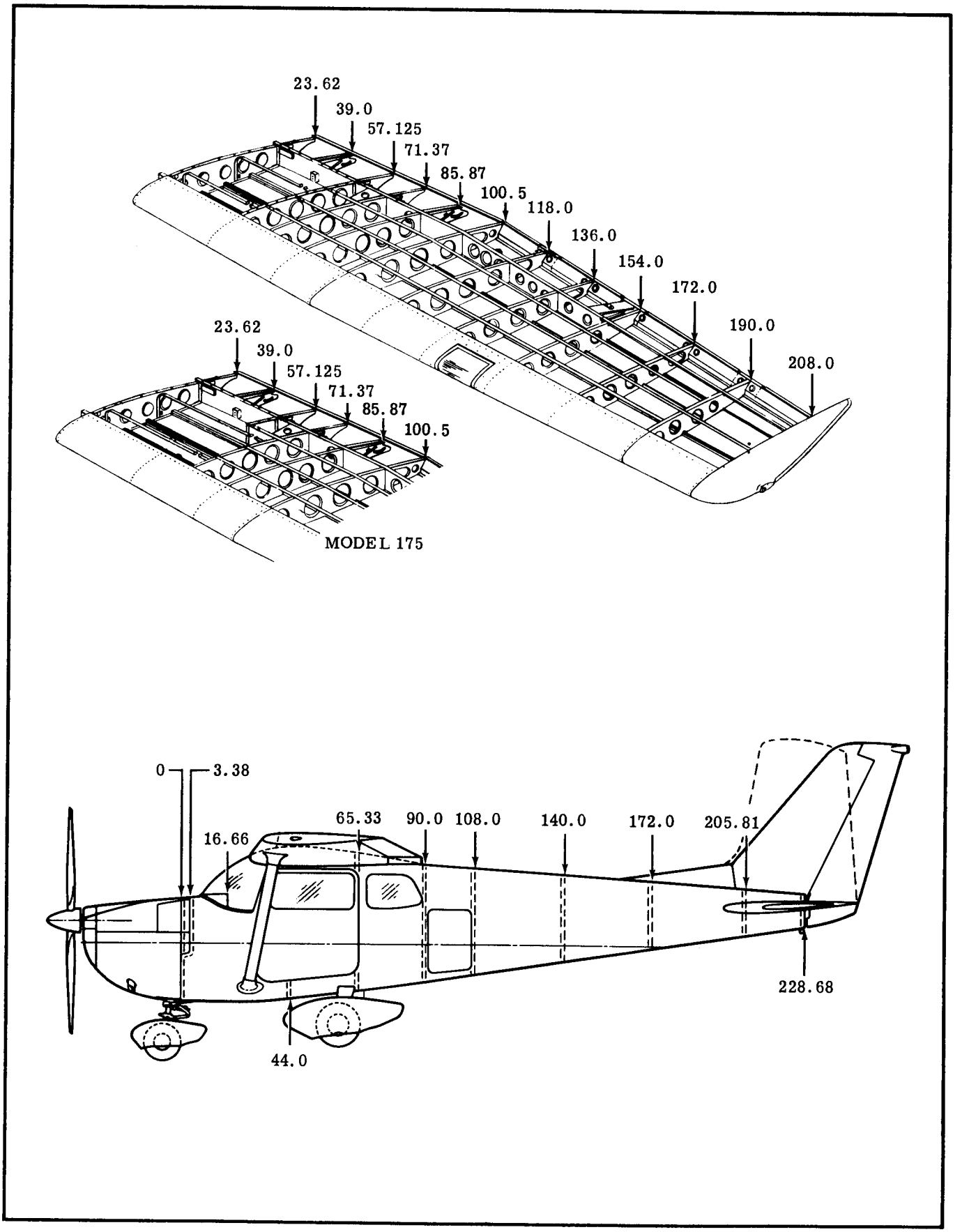

Figure 1-2. Reference Stations - Models 172 & 175

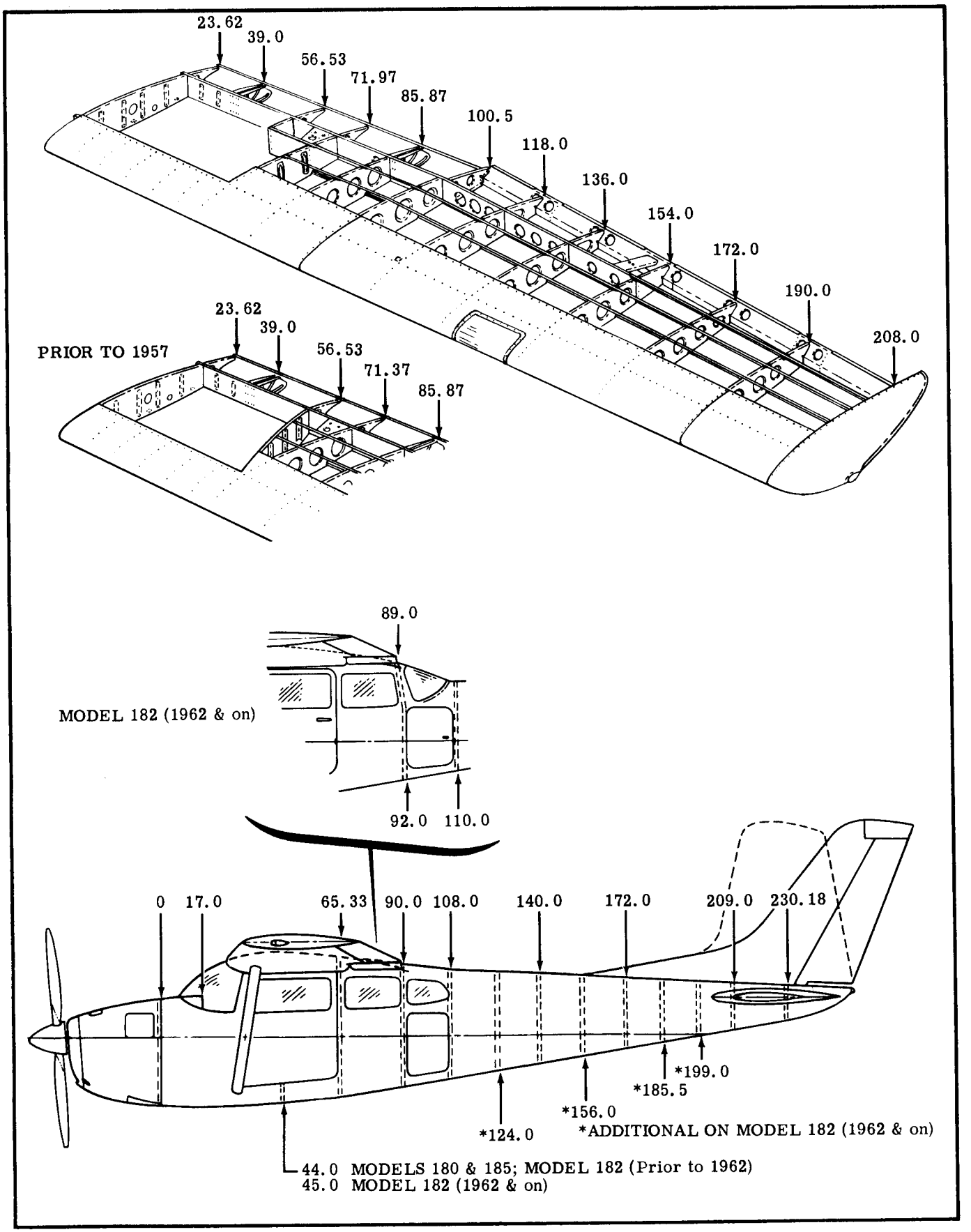

Figure 1-3. Reference Stations - Models 180, 182 & 185

TORQUE VALUES IN POUND-INCHES

FINE THREAD SERIES

BOLT SIZE (See Note 1)	STANDARD TYPE NUTS (See Note 2)	STANDARD TYPE NUTS Alternate Values AN310 (See Note 4)	SHEAR TYPE NUTS MS20364, AN320 AN316, AN7502	SHEAR TYPE NUTS Alternate Values AN320 (See Note 4)
10-32	20-25	20-28	12-15	12-19
1/4-28	50-70	50-75	30-40	30-48
5/16-24	100-140	100-150	60-85	60-106
3/8-24	160-190	160-260	95-110	95-170
7/16-20	450-500	450-560	270-300	270-390
1/2-20	480-690	480-730	290-410	290-500
9/16-18	800-1000	800-1070	480-600	480-750
5/8-18	1100-1300	1100-1600	660-780	660-1060
3/4-16	2300-2500	2300-3350	1300-1500	1300-2200
7/8-14	2500-3000	2500-4650	1500-1800	1500-2900
1-14	3700-5500	3700-6650	2200-3300	2200-4400
1-1/8-12	5000-7000	5000-10000	3000-4200	3000-6300
1-1/4-12	9000-11000	9000-16700	5400-6600	5400-10000

CAUTION

These torque values are derived from oil-free cadmium-plated threads.

COARSE THREAD SERIES

BOLT SIZE (See Note 1)	STANDARD TYPE NUTS (See Note 3)	SHEAR TYPE NUTS MS20364, AN320, AN316
8-32	12-15	7-9
10-24	20-25	12-15
1/4-20	40-50	25-30
5/16-18	80-90	48-55
3/8-16	160-185	95-100
7/16-14	235-255	140-155
1/2-13	400-480	240-290
9/16-12	500-700	300-420
5/8-11	700-900	420-540
3/4-10	1150-1600	700-950
7/8-9	2200-3000	1300-1800
1-8	3700-5000	2200-3000
1-1/8-8	5500-6500	3300-4000
1-1/4-8	6500-8000	4000-5000

NOTES:

(1) AN3, AN23, AN42, AN173, MS20004, NAS334, NAS464 Series bolts; AN502, AN503, NAS220 and NAS517 Series Screws.

(2) AN310, AN315, AN345, AN362, AN363, MS20365, AN366, "EB","1452", "Z1200," "UWN" and other self-locking nuts.

(3) AN310, AN340, MS20365, AN366 and other self-locking anchor nuts.

(4) When using AN310 and AN320 castellated nuts where alignment between bolt and cotter pin holes is not reached using normal torque values, use alternate torque values or replace nut.

These torque values are recommended for all procedures contained in this book except where other values are stipulated.

SECTION 2

GROUND HANDLING, SERVICING, LUBRICATION AND INSPECTION

TABLE OF CONTENTS

	Page
GROUND HANDLING	2-1
Hoisting	2-2
Jacking	2-2
Parking	2-2
Tie-Down	2-2
Hangar Storage	2-2
Outside Storage	2-3
Extended Storage	2-3
Leveling	2-4
SERVICING	2-4
Fuel Tanks	2-4
Fuel Drains	2-4
Engine Oil	2-4
Induction Air Filters	2-4
Battery	2-4
Tires	2-5
Nose Gear Struts	2-5
Nose Gear Shimmy Dampeners	2-5
Hydraulic Brake Systems	2-5
Oxygen Cylinder	2-5
Oxygen Face Masks	2-6
CLEANING	2-6
Windshield and Windows	2-6
Plastic Control Wheels	2-6
Aluminum Surfaces	2-6
Painted Surfaces	2-6
Engine Compartment	2-6
Upholstery and Interior	2-6
Propellers	2-6
Wheels	2-6
SERVICING AND LUBRICATION	2-7
INSPECTION	2-13
25-Hour Inspection	2-13
100-Hour Inspection	2-13

2-1. GROUND HANDLING.

2-2. Moving the aircraft by hand is accomplished by using the wing struts and landing gear as push points. On tricycle gear airplanes, a tow bar attached to the nose gear should be used for steering and maneuvering the airplane. Never turn the nose gear more than 30 degrees in either direction or damage will result. When no tow bar is available, press down at the horizontal stabilizer front spar, adjacent to the fuselage, to raise the nose wheel off the ground. With the nose wheel clear of the ground, the airplane can be turned by pivoting it about the main gear.

CAUTION

Do not push on control surfaces or outboard empennage surfaces. When pushing on the tailcone, always apply pressure at a bulkhead to avoid buckling the skin.

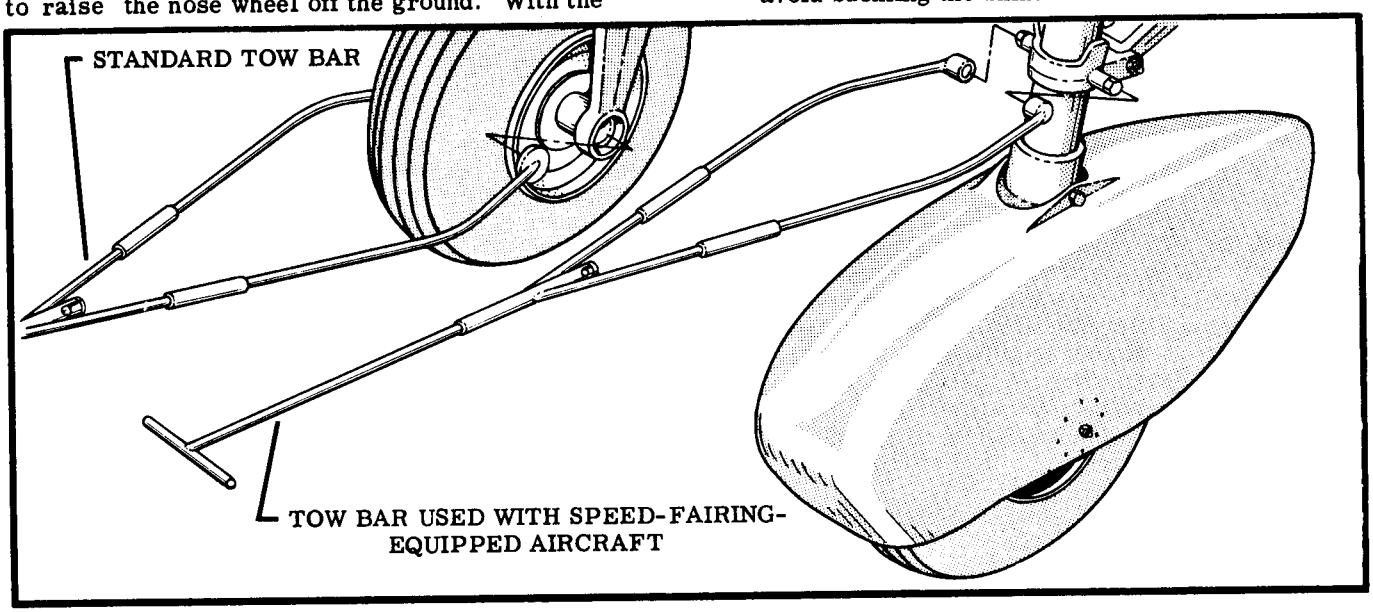

Figure 2-1. Typical Tow Bars

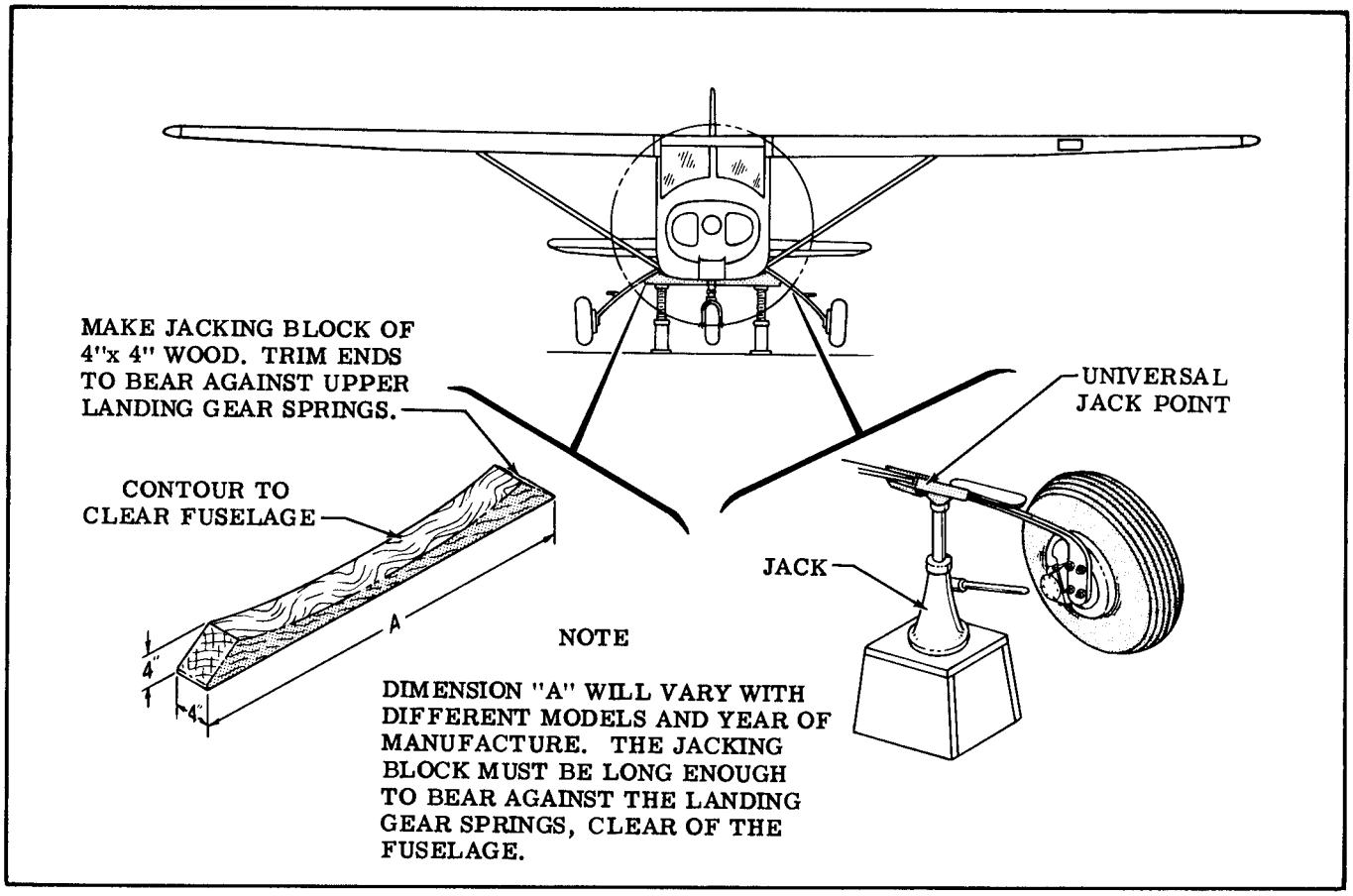

Figure 2-2. Jacking Details

2-3. HOISTING. The airplane may be hoisted with hoists of two-ton capacity, either by using hoisting rings (optional equipment) or by using suitable slings. The front sling should be attached to each upper engine mount at the firewall and the aft sling should be positioned around the fuselage at the first bulkhead forward of the leading edge of the stabilizer.

2-4. JACKING. A special main gear jack point which slips over the main gear strut may be used to jack one wheel at a time. DO NOT use the brake casting as a jacking point.

CAUTION

Flexibility of the gear strut will cause the main wheel to slide inboard as the wheel is raised, tilting the jack. The jack must then be lowered for a second jacking operation. Jacking both wheels simultaneously with universal jack points is not recommended. To jack both wheels use the jacking block illustrated in figure 2-2. Keep the airplane from tipping while using this block.

On tricycle gear aircraft, the nose wheel may be lifted by weighting the tail down.

2-5. PARKING precautions depend principally on local conditions. As a general precaution, it is wise to set the parking brake and install a control lock if available. In severe weather, follow tie-down and storage procedures described below if inside storage is not available.

2-6. TIE-DOWN should be accomplished in anticipation of high winds. Tie down aircraft as follows:

a. Tie ropes or chains to the wing tie-down fittings located at the upper end of each wing strut. Secure the opposite ends of the ropes or chains to ground anchors.

b. Secure a tie-down line through the nose gear tie-down ring. On tricycle gear aircraft without a nose gear tie-down ring, use a rope (no chains or cables) to secure the outer strut to ground anchors.

c. On tricycle gear aircraft, secure the middle of a length of rope to ring at tail. Pull each end of rope away at a 45° angle and secure to ground anchors at each side of tail. On aircraft with conventional tail-gear, tie down the tailwheel.

d. Install surface control locks between flap and aileron and over fin and rudder. Be sure electric flaps are not operated inadvertently.

e. Install control lock on pilot's control column if available; if control lock is not available, tie pilot's control wheel back with front seat belt.

f. If rain, sleet, snow, or blown dust are anticipated, cover the pitot tube.

2-7. HANGAR STORAGE. The aircraft stored in a hangar will require little attention. The following operations will maintain it in serviceable condition.

NOTE

If the airplane is to be stored for a long period, see EXTENDED STORAGE instructions.

a. Turn the propeller over by hand every few days to maintain an oil film on the internal parts of the engine.
b. Keep the fuel tanks full to prevent moisture condensation in the tanks.
c. Keep the battery fully charged to prevent it from freezing in an unheated hangar.

2-8. OUTSIDE STORAGE. Short-term outside storage of the aircraft requires secure tie-down combined with the precautions listed in paragraph 2-6. In addition, suitable protective covers, if available, should be installed.

2-9. EXTENDED STORAGE. Lengthy storage requires the following precautions besides good tie-down or hangaring.

a. Engine:
1. Warm up engine and drain engine oil.
2. Fill sump with pre-heated corrosion preventive oil (Continental recommends Cosmoline No. 1223, supplied by E. F. Houghton & Co, 310 W. Lehigh Ave, Philadelphia, Pa.).
3. Operate engine five minutes at 1200-1500 rpm with 215-225°F oil temperature.
4. Remove air cleaner and inject corrosion-preventive oil into induction airbox at the rate of 1/2 gallon per minute until smoke comes from the exhaust stack, then increase spray until the engine stops. Do not turn crankshaft after engine stops.

CAUTION

Injecting oil too fast can cause a hydrostatic lock.

5. Remove spark plugs and spray corrosion-preventive oil into upper spark plug holes, then into lower spark plug holes.
6. Replace lower plugs or install solid plugs.
7. Install dehydrator plugs in upper spark plug holes.
8. Install shipping plugs or other suitable covers over detached spark plug cable terminals.
9. Cover all engine and accessory openings.
10. Drain corrosion-preventive oil from sump and replace plug.
11. Post a conspicuous warning against propeller movement on the aircraft.

b. Airframe:
1. Lubricate all airframe items.
2. Seal and cover all openings.

c. Battery:
1. Remove from aircraft and service periodically.

d. Block up fuselage to take weight off tires.

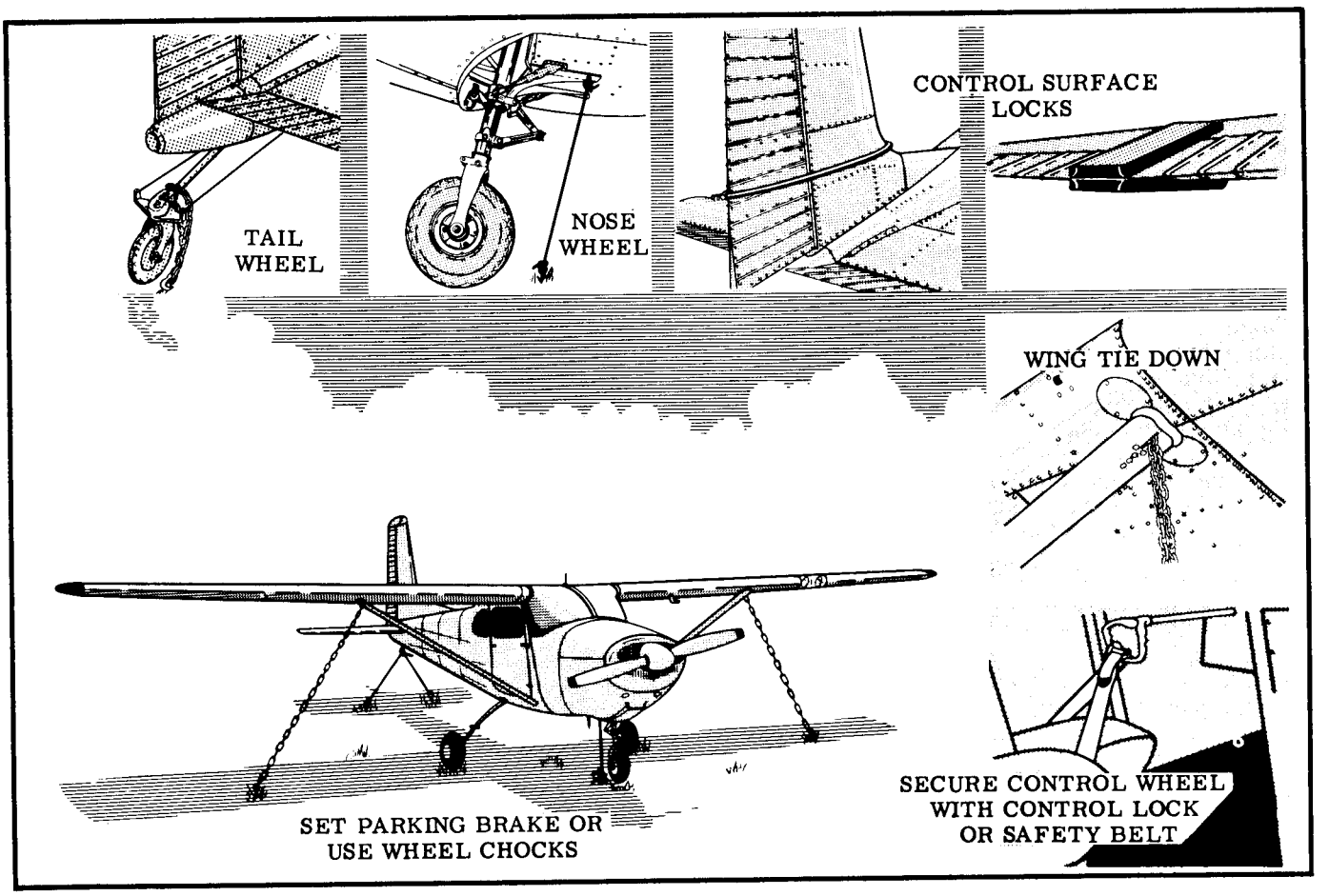

Figure 2-3. Tie-Down Details

NOTE

Tires will take a set, causing wheels to become out-of-round, if an airplane is left parked for more than a few days. For this reason a stored airplane should not have its weight on the tires.

2-10. LEVELING. An upper cabin door sill may be used to level the aircraft longitudinally, and corresponding points on both sills may be used to level the aircraft laterally.

2-11. SERVICING. (See figure 2-4.)

2-12. FUEL TANKS should be filled immediately after flight to lessen moisture condensation. Tank capacities are given below in U.S. gallons. Some aircraft have optional larger tanks.

MODEL	150	172	175	180, 182 & 185
TOTAL CAPACITY	26	42	52	65
CAPACITY EACH TANK	13	21	26	32.5

RECOMMENDED
FUEL GRADE: 80/87 octane minimum, aviation grade, for all except the Model 185, which requires 100/130 octane, aviation grade.

NOTE

Fuel capacity for Models 180 and 182 prior to 1957 is 60 gallons total, 30 gallons each tank.

2-13. FUEL DRAINS are located at various points in the fuel systems to provide for drainage of water and sediment. Each airplane is equipped with a fuel strainer drain valve, fuel line or selector valve drain plugs or valves, and fuel tank sump drain plugs or valves. In many aircraft the fuel strainer drain valve may be operated by a control located at the instrument panel.

2-14. ENGINE OIL should be checked with the oil dipstick 5 to 10 minutes after shutdown to allow the oil to flow back to the sump. When adding or changing oil, use the following aviation grades:

Below 40° F (150, 172, 175)	SAE 20
Below 40° F (180, 182, 185)	SAE 30
Above 40° F (150, 172, 175)	SAE 40
Above 40° F (180, 182, 185)	SAE 50

Oil capacities for the various models are given below. If the aircraft is equipped with an external filter, one additional quart is required when the filter element is changed. When servicing the oil system, oil should be added if the oil level is below the minimum-for-flight quantities listed. Oil should be added to the full mark on the dipstick if extended flight is planned.

MODEL	150	172	175	180, 182 & 185
Total Capacity (quarts)	6	8	10	12
Add oil if below	4	6	6	9

Oil should be changed every 25 hours. At the time of oil change, remove the engine oil screen and wash with solvent (Fed. Spec. P-S-661). On aircraft equipped with a Fram oil filter, the oil should still be changed at 25-hour intervals and the filter element should be replaced every 100 hours. On aircraft equipped with a Winslow or AC full-flow oil filter, change engine oil and filter element at 50-hour intervals. Change oil every four months even though less than 50 hours have accumulated. Reduce these periods for prolonged operation in dusty areas, in cold climates where sludging conditions exist, or where short flights and long idle periods are encountered which cause sludging conditions. Always change oil and replace filter element whenever oil on dipstick appears dirty.

It is recommended that detergent oil not be used during the first 25 hours of engine operation, in order to permit piston rings to seat properly. This applies to an overhauled engine as well as a new one. After the first 25 hours, either straight mineral oil or detergent oil may be used. If a detergent oil is used, it must conform to Continental Motors Corporation Specification MHS-24.

2-15. INDUCTION AIR FILTERS keep dust and dirt from entering the induction system. They should be serviced every 25 hours, oftener under dusty conditions. Under extremely dusty conditions, daily maintenance of the filter is recommended.

a. Remove the filter and wash in solvent (Fed. Spec. P-S-661). The newer "dry" filters used on some models may be cleaned by blowing with compressed air (not over 100 psi) from the back side, or they may be washed with mild household detergent and warm water.

b. Drain and dry, then dip flock-coated screen filters in same grade of oil used in engine, and drain off the excess oil. The newer type should be allowed to dry if washed.

c. Be sure airbox is clean, inspect filter and replace if necessary, then install. Maximum recommended life of the dry (paper element) filters is 300 hours.

NOTE

Keeping a supply of clean, serviced filters on hand will speed up air filter servicing. Refer to figure 2-5.

2-16. BATTERY servicing involves adding distilled water to maintain the electrolyte even with the horizontal baffle plate or split ring at the bottom of the filler holes, checking the battery cable connections,

and neutralizing and cleaning off any spilled electrolyte or corrosion. Use bicarbonate of soda (baking soda) and water to neutralize electrolyte or corrosion. Follow with a thorough flushing with water. Brighten cables and terminals with a wire brush, then coat with petroleum jelly before connecting. The battery box also should be checked and cleaned if any corrosion is noticed. Distilled water, not acid or "rejuvenators" should be used to maintain electrolyte level. Check the battery every 25 hours (or at least every 30 days), oftener in hot weather.

2-17. TIRES should be maintained at the air pressures specified below in psi. When checking tire pressure, examine tires for wear, cuts and bruises.

MODEL	150	172	175	180	182	185
MAIN TIRES	30	23	23	28	*28	**35
NOSE (OR TAIL) TIRES	30	***26	***26	35	***29	45

*32, 1962 and on.
**35, for 6:00 x 6 tires; 25, for 8:00 x 6 tires.
***These pressures are used for tube-type tires and magnesium nose wheels only. The pressures for tubeless tires and aluminum nose wheels are: 172 and 175, 35 psi; 182, 45 psi. The older, magnesium wheels used on these models can be easily identified by the presence of six webs which are evenly spaced between the rim and center hub. The newer, aluminum wheels do not have these webs. The higher pressures help prevent damage to wheel flanges.

NOTE

Since low tire pressure may result in leakage around tubeless tire beads, the recommended tire pressures should be maintained. Especially in cold weather, remember that any drop in temperature of the air inside a tire causes a corresponding drop in pressure.

2-18. NOSE GEAR STRUTS require periodic checking to ensure that the strut is filled with hydraulic fluid and is inflated to the correct air pressure. The servicing procedure is stated on the strut placard, or the following procedure may be used.

a. Remove valve cap and release all air.
b. Remove valve housing assembly.
c. Compress strut completely (that is, with the stops in contact with the outer barrel hub).
d. Fill strut level to valve hole with MIL-H-5606 hydraulic fluid.
e. Lift nose of aircraft and extend strut.
f. Replace valve housing assembly and inflate the strut with nose wheel off the ground. Inflate to 35 psi (20 psi on the Model 150 and 50 psi on the Model 182, 1962 and on).

NOTE

Keep the nose gear shock strut, especially the exposed portion of the strut piston, wiped off with a clean dry cloth to remove dust and grit which may cut the seals in the strut barrel. Do not wipe the strut with hydraulic fluid, since this tends to collect even more dust and grit.

2-19. NOSE GEAR SHIMMY DAMPENERS should be serviced at least every 100 hours. The dampener must be filled completely with fluid, free of entrapped air, to serve its purpose. Two types of dampeners were used, one of which must be removed to check fluid level and refill. If the dampener has a filler plug, refill as follows:

a. Remove the filler plug.
b. Using the tow bar, turn the nose gear in the direction that places the dampener piston at the end opposite the filler plug.
c. Fill with MIL-H-5606 hydraulic fluid.
d. Install and safety the filler plug.

If the dampener does not have a filler plug, refill as follows:

a. Remove the dampener from the airplane.
b. Pull the fitting end of the dampener shaft to its travel limit.
c. Fill through the opposite end with MIL-H-5606 hydraulic fluid, while holding the dampener vertical.
d. Push the shaft upward slowly to seal off the filler hole, and reinstall the dampener on the airplane. Be sure to keep the shaft protruding through the filler hole until the dampener is installed.

An alternate method of filling either type shimmy dampener is to submerge it in clean hydraulic fluid and work the dampener shaft back and forth (filler plug removed) to expel air and fill completely with fluid.

NOTE

Keep the shimmy dampener, especially the exposed portions of the dampener shaft wiped off with a clean dry cloth to remove dust and grit which may cut the seals in the dampener barrel. Do not wipe the shaft with hydraulic fluid, since this tends to collect even more dust and grit.

2-20. HYDRAULIC BRAKE SYSTEMS should be checked for fluid at least every 100 hours. Add MIL-H-5606 hydraulic fluid at the brake master cylinders as required. Brakes should be bled of entrapped air whenever there is a spongy response to the brake pedals.

2-21. OXYGEN CYLINDER. Some aircraft are equipped with an optional oxygen system. The oxygen cylinder should be refilled when oxygen system pressure is below 300 psi. When fully charged, the cylinder contains 48 cubic feet of oxygen at 1800 psi at 70°F. To refill the oxygen cylinder:

a. Unfasten baggage compartment rear wall or access plate to gain access to the oxygen cylinder.
b. Turn off oxygen cylinder valve by turning it full clockwise.
c. Disconnect oxygen line from cylinder.
d. Loosen clamps securing cylinder and remove cylinder.
e. Refill cylinder with aviators' breathing oxygen (Fed. Spec. BB-O-925, or equivalent).
f. Reverse the above steps to install the cylinder.

WARNING

Oil, grease, or other lubricants in contact with oxygen create a serious fire hazard, and such contact must be avoided. Only a thread compound approved under MIL-T-5542 can be used safely on oxygen systems. Apply only to the first three threads of male fittings to prevent thread seizure.

NOTE

Some oxygen systems are equipped with a filler valve so the system may be refilled without removing the oxygen cylinder.

2-22. OXYGEN FACE MASKS. Disposable oxygen face masks are normally stowed in a plastic bag on the baggage shelf. Oxygen servicing should include checking the condition of the face masks and a replenishment of the supply as required.

2-23. CLEANING.

2-24. Keeping the aircraft clean is important. Besides maintaining the trim appearance of the airplane cleaning lessens the possibility of corrosion and makes inspection and maintenance easier.

2-25. WINDSHIELDS AND WINDOWS should be cleaned carefully with plenty of fresh water and soap, using the palm of the hand to feel and dislodge any caked dirt or mud. A sponge, soft cloth or chamois may be used, but only as a means of carrying water to the plastic. Dry with a clean, damp chamois. Rubbing with a dry cloth will build up an electrostatic charge which will attract dust particles. Oil and grease may be removed by rubbing lightly with a kerosene-moistened cloth.

CAUTION

Do not use gasoline, alcohol, benzene, acetone, carbon tetrachloride, fire extinguisher fluid, de-icer fluid, lacquer thinner or glass window cleaning spray. These solvents will soften and craze the plastic.

2-25A. PLASTIC CONTROL WHEELS and other plastic parts, such as some fuel valve handles, should be cleaned with soap and water. Observe the precautions listed in the preceding paragraph.

2-26. ALUMINUM SURFACES require a minimum of care, but should never be neglected. The airplane may be washed with clean water to remove dirt, and with carbon tetrachloride or other non-alkaline grease solvents to remove oil and/or grease. Household type detergent soap powders are effective cleaners, but should be used cautiously since some of them are strongly alkaline. Many good aluminum cleaners, polishes, and waxes are available from commercial suppliers of aircraft products.

2-27. PAINTED SURFACES are best cared for by washing with clean water and a mild soap, then waxing with any good automotive wax. Use only clean, cold water and a mild soap during the initial curing period of the paint, which may be as long as 90 days.

2-28. ENGINE COMPARTMENT cleaning is essential to minimize any danger of fire, and for proper inspection of components. The engine and engine compartment may be washed down with a suitable solvent, then dried thoroughly.

2-29. UPHOLSTERY AND INTERIOR cleaning prolongs the life of upholstery fabrics and interior trim. To clean the interior:

a. Empty the ash trays.
b. Brush out or vacuum clean the carpeting and upholstery to remove dirt.
c. Wipe off leather, Royalite, and plastic surfaces with a damp cloth.
d. Soiled upholstery fabrics and carpeting may be cleaned with a foam-type detergent, used according to the manufacturer's instructions.
e. Oily spots and stains may be cleaned with household spot removers, used sparingly. Before using any solvent, read the instructions on the container and test it on an obscure place in the fabric to be cleaned. Never saturate the fabric with a volatile solvent; it may damage the padding and backing materials.
f. Scrape off sticky materials with a dull knife, then spot clean the area.

2-30. PROPELLERS should be wiped off occasionally with an oily cloth to clean off grass and bug stains. In salt water areas this will assist in corrosion-proofing the propeller.

2-31. WHEELS should be washed off periodically and examined for corrosion, chipped paint, and cracks or dents in the wheel castings. Sand smooth, prime, and repaint minor defects.

2-32. LUBRICATION. (See figure 2-4.)

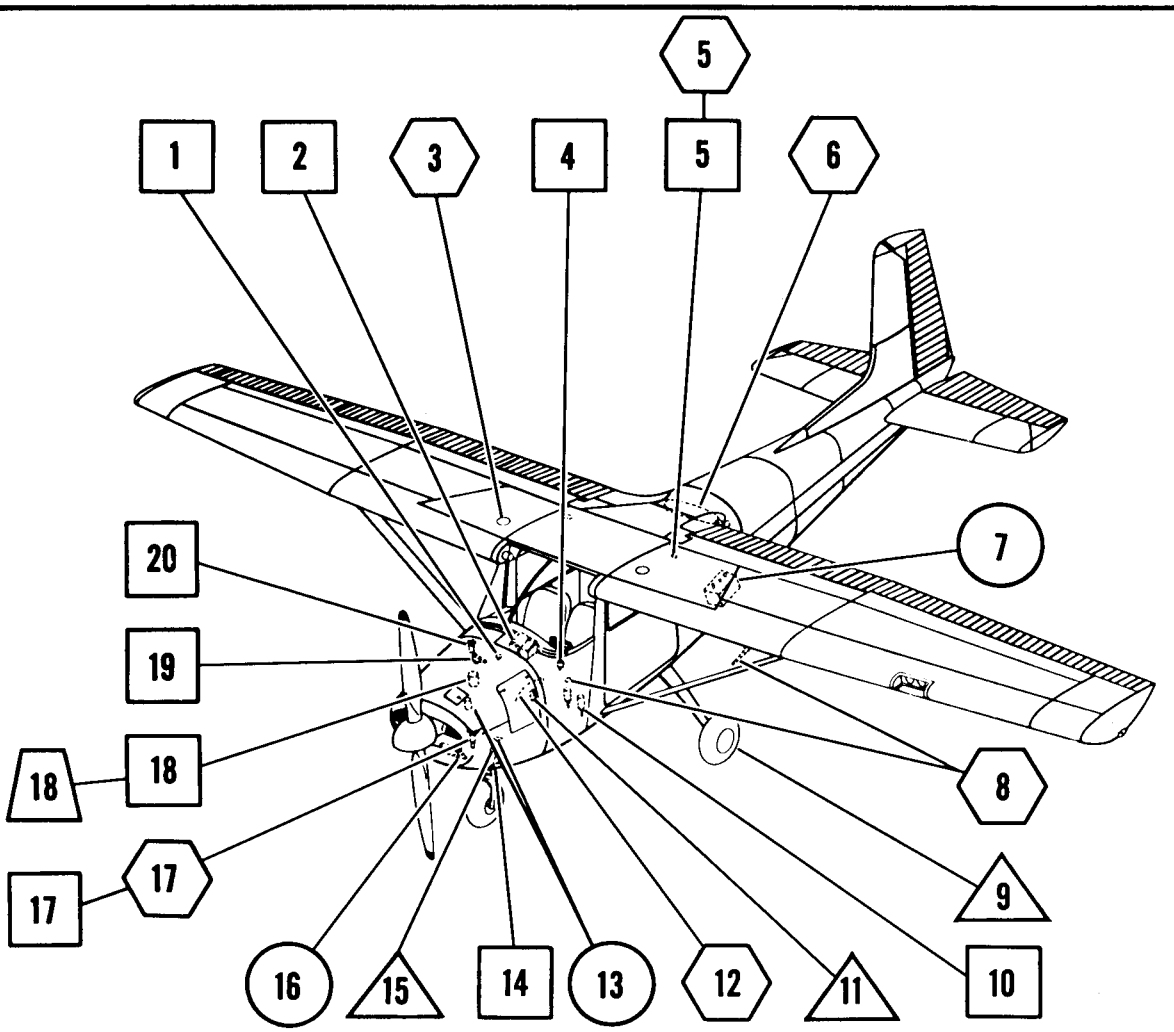

DAILY

3 FUEL TANK FILLERS

Fill after each flight. Keep full to retard condensation. Refer to paragraph 2-12 for tank capacities and fuel grades.

5 FUEL TANK SUMP DRAINS

If optional quick-drain valves are installed, drain off any water and sediment before the first flight of the day.

6 OXYGEN CYLINDER

Check for anticipated requirements before each oxygen flight. Refer to paragraph 2-21 for detailed servicing instructions.

8 PITOT AND STATIC PORTS

Check for obstructions before first flight of the day.

SERVICING

Figure 2-4. Servicing and Lubrication - Sheet 1 of 5

12 OIL DIPSTICK

Check on preflight. Add oil as necessary.

17 FUEL STRAINER

Drain off any water and sediment before the first flight of the day.

25 HOURS

7 BATTERY

Check level of electrolyte every 25 hours (or at least every 30 days), oftener in hot weather. Maintain level of electrolyte even with the horizontal baffle plate or split ring at the bottom of the filler holes by adding distilled water only.

13 OIL FILLER AND DRAIN

Change engine oil and clean oil screen every 25 hours, oftener under severe operating conditions. Refer to paragraph 2-14 for detailed servicing instructions.

16 INDUCTION AIR FILTER

Service every 25 hours, oftener under dusty conditions. Refer to paragraph 2-15 for detailed servicing instructions.

50 HOURS

18 WINSLOW OR AC OIL FILTER

Change engine oil and replace filter element every 50 hours. Refer to paragraph 2-14 for oil filter servicing.

100 HOURS

1 FUEL/AIR CONTROL UNIT SCREEN

Every 100 hours, remove and clean the screen in the bottom of the fuel/air control unit on fuel injection engines, then reinstall and resafety the screen.

2 GYRO INSTRUMENT AIR FILTERS

Replace every 100 hours and when erratic or sluggish responses are noted with normal suction gage readings.

4 FUEL LINE DRAIN PLUGS OR VALVES

Every 100 hours, remove plugs, drain off any water and sediment, reinstall plugs, and resafety. Some aircraft use drain valves instead of drain plugs.

5 FUEL TANK SUMP DRAINS

If quick-drain valves are not installed, remove plugs and drain off any water and sediment every 100 hours. Reinstall and resafety plugs.

SERVICING

Figure 2-4. Servicing and Lubrication - Sheet 2 of 5

10 BRAKE MASTER CYLINDERS

Every 100 hours, check fluid level and refill if required with MIL-H-5606 hydraulic fluid.

14 SHIMMY DAMPENER

Every 100 hours, check fluid level in shimmy dampener, refill if required. Refer to paragraph 2-19 for detailed instructions.

17 FUEL STRAINER AND ELECTRIC FUEL PUMP SCREENS

Disassemble and clean strainer bowl and screen every 100 hours. On fuel injection aircraft, remove and clean screens in electric fuel pumps every 100 hours.

18 FRAM OIL FILTER

Replace filter element whenever oil on dipstick appears dirty; maximum interval, 100 hours. Refer to paragraph 2-14 for detailed instructions.

19 VACUUM SYSTEM OIL SEPARATOR

Remove, flush with solvent, dry with compressed air every 100 hours.

20 SUCTION RELIEF VALVE SCREEN

Every 100 hours, check inlet screen for cleanliness. Remove, flush with solvent, and dry with compressed air if required.

△ AS REQUIRED

9 TIRES

Maintain proper tire inflation as given in paragraph 2-17. Remove oil and grease with soap and water; periodically check tires for wear, cuts, and bruises.

11 GROUND SERVICE RECEPTACLE

Connect to 12-volt, DC, negative-ground power unit for cold weather starting and lengthy ground maintenance of the electrical system. Master switch should be turned on before connecting a generator type external power source; it should be turned off before connecting a battery type external power source.

15 NOSE GEAR SHOCK STRUT

Keep strut filled and inflated to correct pressure. Refer to paragraph 2-18 for servicing instructions.

The military specifications listed throughout this book are not mandatory, but are intended as guides in choosing satisfactory materials. Products of most reputable manufacturers meet or exceed these specifications.

SERVICING

Figure 2-4. Servicing and Lubrication - Sheet 3 of 5

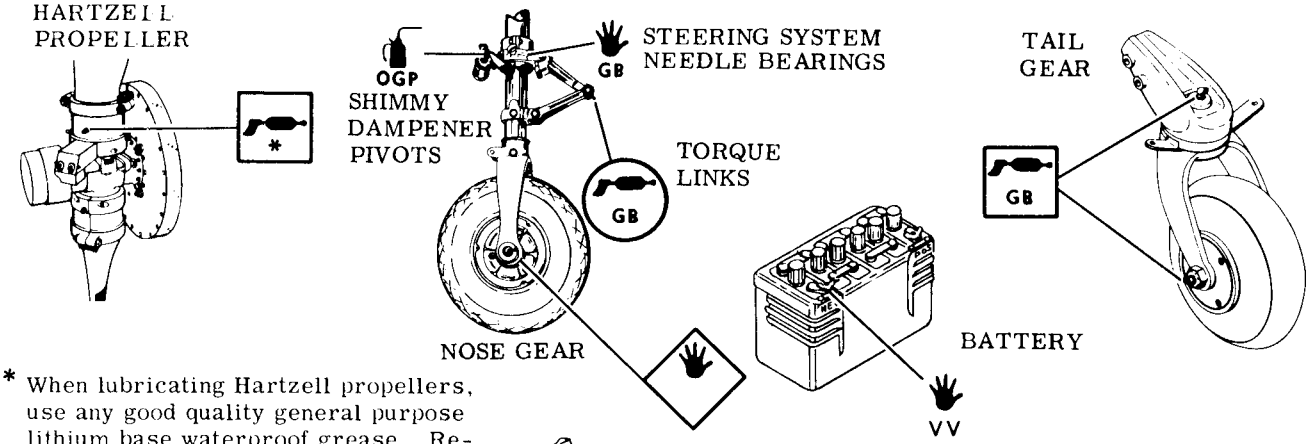

* When lubricating Hartzell propellers, use any good quality general purpose lithium base waterproof grease. Remove grease fitting adjacent to the fitting being greased and fill until the grease oozes from adjacent hole. The newly-designed Hartzell propellers should be lubricated in the same way.

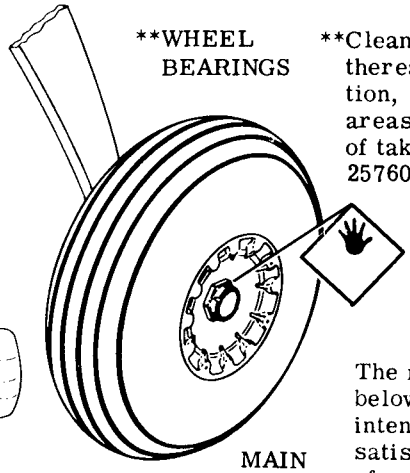

**Clean and repack at first 100-hours; thereafter, at each 500-hour inspection, or more often in dusty or humid areas, or if more than usual number of take-offs are made. Use MIL-G-25760 (or equivalent) grease.

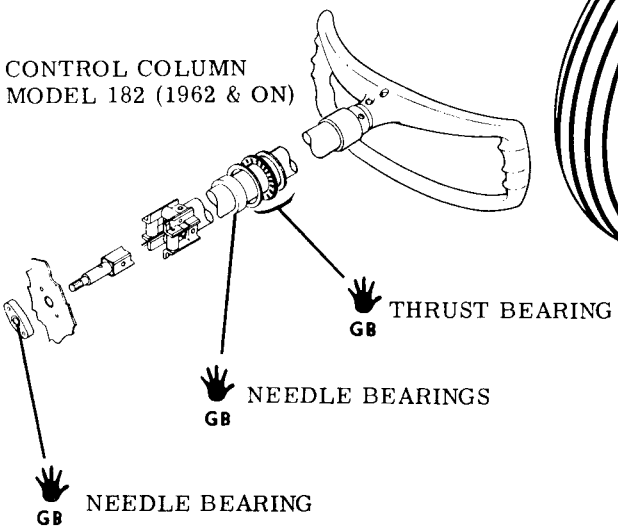

NOTE

The military specifications listed below are not mandatory, but are intended as guides in choosing satisfactory materials. Products of most reputable manufacturers meet or exceed these specifications.

FREQUENCY (HOURS)

25 100 500

METHOD OF APPLICATION

HAND GREASE GUN OIL CAN SYRINGE (FOR POWDERED GRAPHITE)

NOTE

Sealed bearings require no lubrication.

McCauley propellers are lubricated at overhaul and require no other lubrication.

Do not lubricate roller chains or cables except under seacoast conditions. Wipe with a clean dry cloth.

Lubricate unsealed pulley bearings, rod ends, Oilite bearings, pivot and hinge points, and any other friction point obviously needing lubrication, with general purpose oil every 1000 hours or oftener if required.

LUBRICANTS

GG — POWDERED GRAPHITE
GB — MIL-G-7711 GREASE
OGP — MIL-L-7870 GENERAL PURPOSE OIL
VV — PETROLATUM

WHERE NO INTERVAL IS SPECIFIED, LUBRICATE AS REQUIRED AND WHEN ASSEMBLED OR INSTALLED.

LUBRICATION

Figure 2-4. Servicing and Lubrication - Sheet 4 of 5

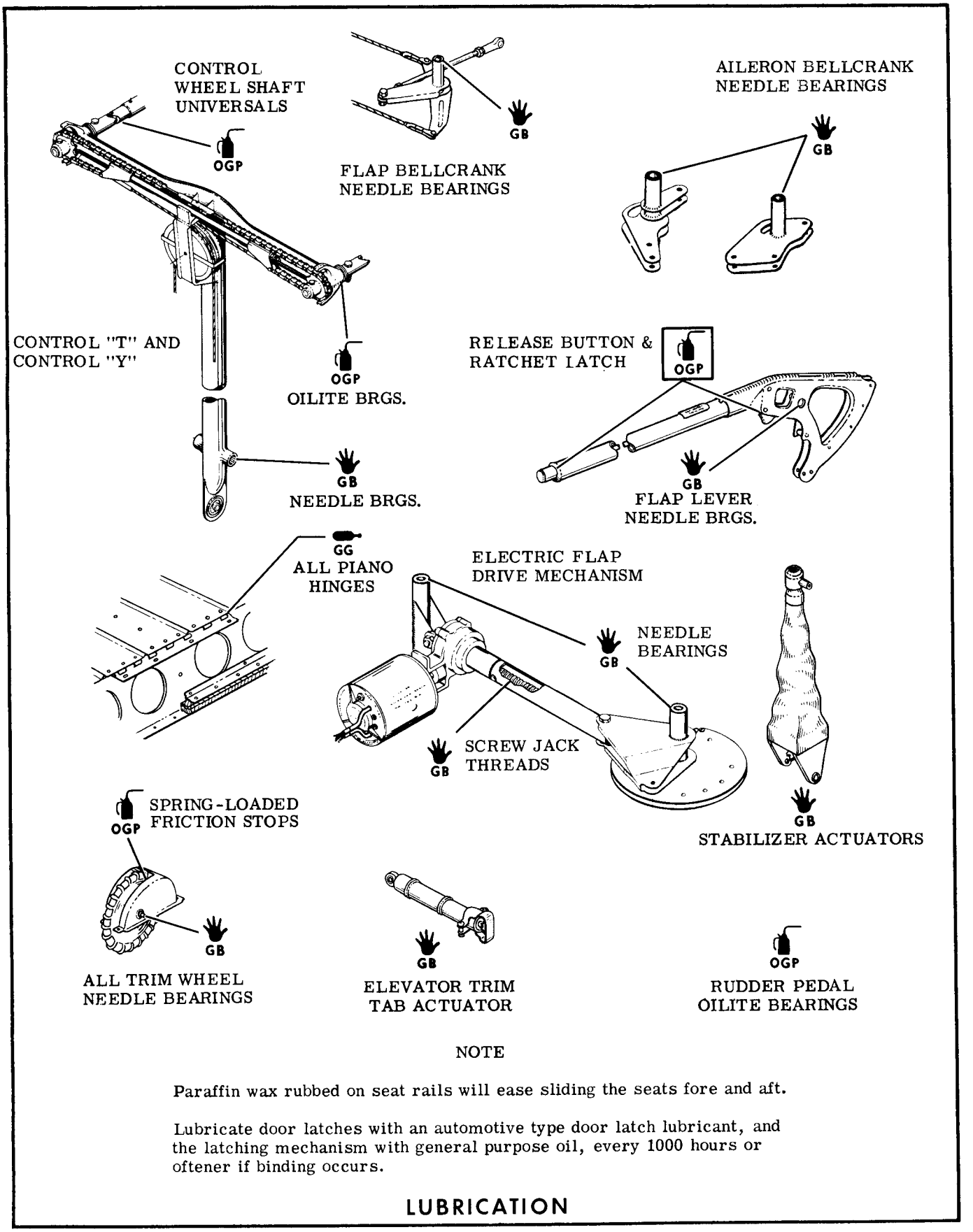

NOTE

Paraffin wax rubbed on seat rails will ease sliding the seats fore and aft.

Lubricate door latches with an automotive type door latch lubricant, and the latching mechanism with general purpose oil, every 1000 hours or oftener if binding occurs.

LUBRICATION

Figure 2-4. Servicing and Lubrication - Sheet 5 of 5

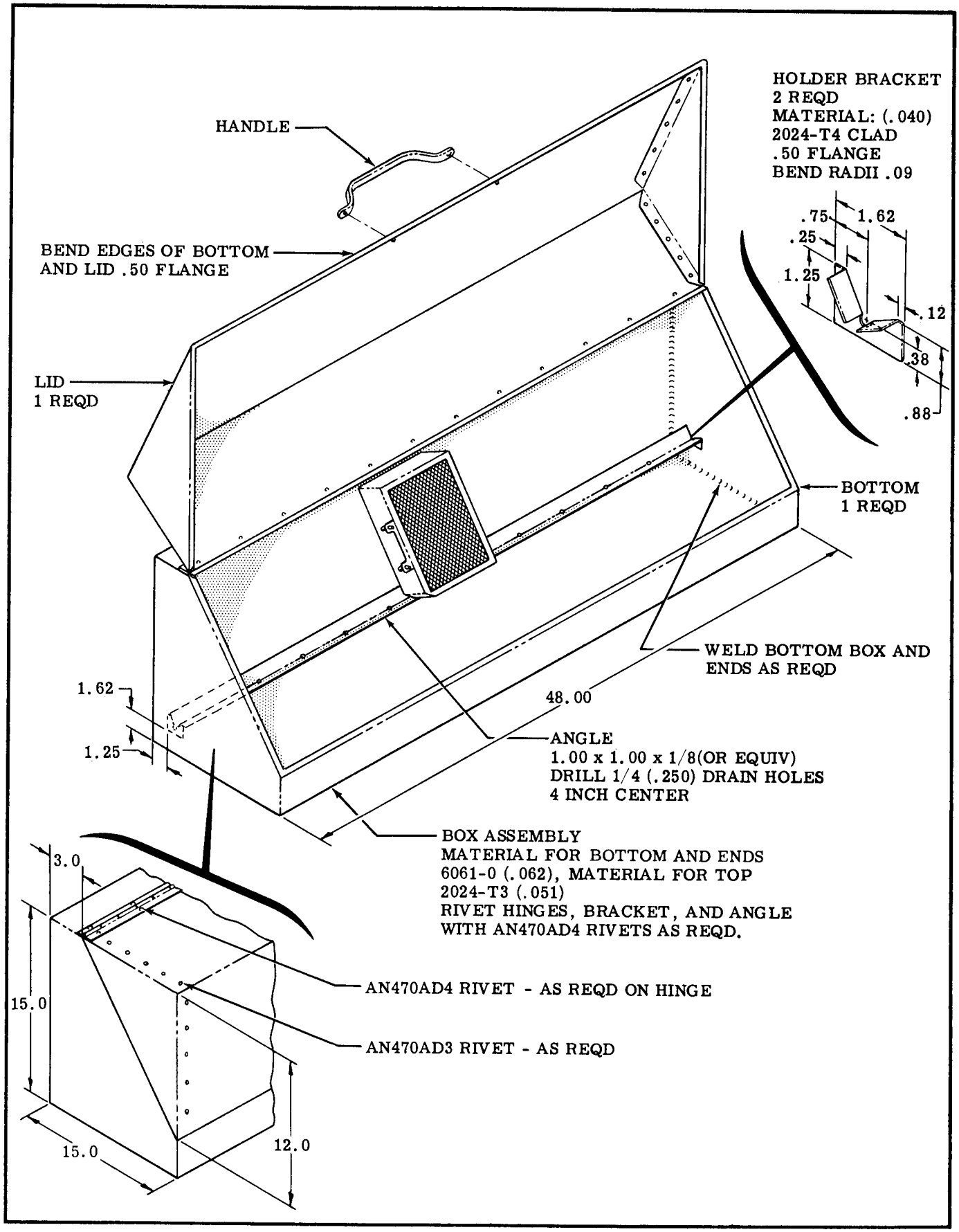

Figure 2-5. Construction of Induction Air Filter Servicing Box

INSPECTION

25-HOUR INSPECTION

Before beginning the inspection, determine that engine and propeller performance is normal and that all systems function properly.

1. Engine and engine compartment for fuel and oil leaks, security of parts, correct engine and propeller control travel, proper safetying, and visible defects.
2. Propeller and spinner for apparent damage or defects.
3. Remainder of airplane for security of attaching bolts, screws, and rivets, broken spot-welds, fuel leaks, and apparent exterior damage or defects.
4. Items for servicing and lubrication in accordance with Figure 2-4 as required at 25-hour intervals.

NOTE

50-hour and 75-hour inspections are 25-hour inspections repeated at these intervals. Also check any items of servicing and lubrication required at these intervals.

100-HOUR INSPECTION

The 100-hour (periodic) inspection is a thorough, searching inspection of the entire airplane. Unless the progressive inspection method is used, it is required every twelve months as a periodic inspection or every 100 hours, if the airplane is operated for hire, in accordance with Civil Air Regulations.

ENGINE RUN-UP.
Before beginning the inspection proper, start, run up, and shut down the engine in accordance with instructions in the Owner's Manual. During the run-up observe the following, making note of any discrepancies or abnormalities:

1. Engine temperatures and pressures.
2. Static rpm.
3. Magneto drop; note particularly any difference between the drop on the two magnetos.
4. Engine response to changes in power.
5. Any unusual engine noises.
6. Propeller response through pitch range.
7. Fuel tank selector or shut-off valve; operate engine on each tank and off positions long enough to make sure the valve functions properly.
8. Idling speed and mixture; proper idle cut-off.
9. Generator warning light or ammeter.
10. Suction gage.
11. Fuel flow indicator.

After the inspection has been completed, an engine run-up should again be performed to ascertain that any discrepancies or abnormalities have been corrected.

PREPARATION.
Remove engine cowling, and loosen or remove all fuselage, wing, empennage, and upholstery inspection doors, plates, and fairings as necessary to accomplish the inspection. Replace after the inspection has been completed.

ENGINE COMPARTMENT.

1. Engine oil for changing, screen for cleaning; filler cap, dipstick, drain plug, and screen for security and safetying as required. Refer to Figure 2-4 for aircraft equipped with external oil filters.

NOTE

Examine oil screens, filters, and sump oil for metal particles or contamination that could indicate internal damage to the engine.

2. Oil cooler for security, leaks, and obstructed air passages.
3. Induction air filter for servicing, proper fit, security, cracks in frame, and tears or bare spots in filter element. Paper element "dry" filters for replacement every 300 hours.
4. Entire engine assembly for cleanliness.
5. Induction airbox for internal cleanliness, cracks, and security; air valve and doors for operation and sealing; controls for security and operation.
6. Cold air and hot air flexible hoses for security, kinks, holes, chafing, and burnt spots.
7. Engine baffles for security, sealing, cracks, metal deformation, and attachment of sealing strips.
8. Cylinders for security, cracks, broken cooling fins; rocker box covers and push rod housings for security, oil leaks, cracks, and dents.
9. Crankcase, oil pan, reduction gear housing, and accessory section for security, oil leaks, safetying; front crankshaft seal for oil leakage.
10. All lines and hoses for security, leaks, cracks, dents, kinks, corrosion, hose deterioration, and chafing.
11. Intake system for security, leaks, deteriorated hoses, and loose or corroded clamps; manifold drains for proper operation, drain lines and hoses for security, leaks, and chafing.
12. Exhaust system for security, leaks, cracks, and burned-out spots. Refer to paragraph 12-74.
13. Ignition harness for security, chafing, burning, defective insulation, and loose or broken terminals.
14. Spark plugs for proper gap, cleanliness, and evidence of reliable operation. (Also see paragraph 12-40.)
15. Crankcase and vacuum system breather lines for security, obstructions, corrosion, cracks, and chafing.
16. All electrical wiring in the engine compartment for security, chafing, defective insulation, and loose or broken terminals.
17. Vacuum pump for security, oil leaks, and safetying.
18. Vacuum relief valve for security and the inlet screen for cleanliness, holes, corrosion, and safetying.
19. Vacuum system oil separator for security, cracks, oil leaks, and servicing.
20. Engine and propeller controls and linkage for security, proper rigging, binding, excessive wear, cracks, misalignment, corrosion, safetying, and chafing.
21. Engine shock mounts for security, safetying, deterioration; engine mount for cracks, corrosion, dents, bends, and evidence of overheating; ground straps for security, corrosion, fraying of braided straps, and cracking of metal straps.
22. Cabin heater valve and door for proper operation, sealing, cracks, and deformation; controls for security, binding, proper rigging, and alignment.
23. Starter for security, oil leaks, tight electrical connections; engagement lever for proper rigging and return spring tension. Every 200 hours, check starter brushes for sufficient length, binding; brush leads for fraying, chafing; commutator for glaze, pits, grooves, high mica, and cleanliness.
24. Generator for security and oil leaks if generator is fastened to accessory case; drive belt for cuts, fraying, and excessive wear; electrical connections for security. Every 200 hours, check generator brushes for sufficient length, binding; brush leads for fraying, chafing; commutator for glaze, pits, grooves, high mica, and cleanliness.
25. Voltage regulator for security and tight electrical connections. Every 200 hours, check contact points for discoloration, pits, and corrosion.
26. Starting vibrator for security and tight electrical connections. Every 500 hours, check vibrator contact points for discoloration, pits, and corrosion.

27. Bendix-Scintilla Magnetos.
    a. Breaker compartment for dirt and grease.
    b. Breaker points for security, pits, burns, and carbon deposits.
    c. Cam followers for correct lubrication.
    d. Ventilator screens for cleanliness and security.
    e. Magnetos for correct internal timing, timing to engine, and security of attachment.
28. Slick (formerly Case) Magnetos.
    a. Magnetos for correct timing to engine and security of attachment.

NOTE

As long as Slick magneto timing is correct, the magnetos need be checked internally only at 500-hour intervals. Check the following items whenever a magneto is disassembled.

    b. Breaker points for security, pits, burns, and carbon deposits.
    c. Cam oiler pad for correct lubrication.
    d. Ventilator screens for cleanliness and security.
    e. Carbon brush for excessive wear. The brush should protrude a minimum of 1/32" from the shaft.
    f. Each end of the distributor gear shaft for correct lubrication.
    g. The magnetos for correct internal timing during reassembly, timing to the engine, and security of attachment.
29. Carburetor for security, cracks, corrosion, fuel leaks, cleanliness of inlet screen and proper safetying.
30. Fuel/air control unit for security, cracks, corrosion, fuel leaks, cleanliness of inlet screen, proper safetying, and security of cooling shrouds.
31. Engine-driven fuel pump for security, cracks, leaks, proper safetying, and security of cooling shrouds.
32. Fuel manifold valve (fuel injection distributor) for security, proper safetying, and leaks.
33. Fuel injection lines for security, kinks, cracks, dents, leaks, and chafing.
34. Fuel injection nozzles for cleanliness and security.
35. Engine cowling for cleanliness, proper fit, security, cracks, dents, cuts, tears, loose or broken hinges, defective latches or fasteners, and deteriorated paint.
36. Cowl flaps for cleanliness, proper fit, security, cracks, dents, cuts, tears, loose or broken hinges, and deteriorated paint; control for security, proper rigging, and binding.

PROPELLER.

1. Fixed-pitch propeller for track, nicks, cracks, corrosion, bends, dents, security, and proper safetying.
2. Constant-speed propellers for nicks, cracks, corrosion, bends, dents, loose nuts and bolts, oil leaks, freedom of blade movement, excessive looseness of blades, security, and proper safetying.
3. Hartzell constant-speed propeller for correct lubrication.
4. Propeller governor for security, safetying, cracks, oil leaks; control for correct rigging, security, binding, and proper safetying.
5. Spinner and spinner bulkhead for cracks, dents, alignment, security, and condition of paint.

FUEL SYSTEM.

1. Fuel strainer for internal cleanliness, security, leaks, and safetying; drain valve and control for proper rigging, operation, leaks, and security.
2. Electric fuel pumps for cleanliness of filter screens, security, leaks, proper operation, and tight electrical connections.
3. Fuel tank sump drains for water and sediment, leaks, security, and safetying; quick-drain valves for proper operation.
4. Underside of wings for evidence of fuel leaks; rubber fuel cells for loose fasteners attaching upper surface to wing; fuel tank filler cap placards for legibility; caps for leaks and security.

NOTE

At engine overhaul periods (or approximately 1000 hours), drain all fuel and inspect interior of rubber fuel cells for checks and cracks, and the area around the filler opening for visible defects. On metal fuel tanks, remove the wing skin above the tanks and check for deformed metal, chafing, condition of straps and rubber pads, and security. On rubber or metal tanks, check outlet screens for contamination. These are coarse screens, designed to filter out larger foreign particles.

5. Fuel vents for obstructions, operation of check valve, leaks, security, and proper position of vent behind wing strut.
6. Fuel selector valve, or shut-off valve, for proper operation, security, leaks, positive detent positions, and legibility and correct indexing of placard.
7. All fuel lines for security, chafing, leaks, cracks, dents, kinks, and corrosion.
8. Fuel line and selector valve drains for servicing, security, leaks, and safetying.
9. Fuel accumulator tank for cracks, dents, leaks, and security.
10. Fuel quantity gages (direct-reading), electrical fuel quantity gages, and fuel quantity electrical transmitters for security, correct indication, defective electrical wiring, cracked glass, legibility, and leaks.
11. Engine primer for proper operation, leaks, and security.
12. Vapor return line solenoid and fuel system check valves for proper operation, leaks and security.

LANDING GEAR.

1. Brakes for proper operation, sponginess, failure to hold pressure, and fluid level.
2. Master cylinders, brake lines, and hoses for security, leaks, cracks, dents, and chafing.
3. Brake linings for wear, cleanliness, chips, cracks, and security.
4. Brake discs for scoring, warping, excessive wear, and loose or broken brake clips.
5. Wheel and brake assembly for cracks, dents, corrosion, leaks, loose bolts, defective paint, freedom of moving parts, and excessive wear.
6. Axles for security, cleanliness, cracks, bends, defective threads; axle nuts for proper adjustment and safetying.
7. At the first 100-hour inspection and at 500-hour intervals thereafter, remove the wheel bearings and inspect for cleanliness, rust, cracks, pits, scoring, brinelling, discoloration, excessive wear, and lubrication.
8. Main landing gear spring struts for security, cracks, bends, deep scratches, dents, chipped or peeling paint, and security of steps.
9. Tires for proper inflation, sufficient tread, cleanliness, cuts, blisters, breaks, and uneven wear. Check wheel alignment if tires show uneven wear.
10. Tailwheel for lubrication, security, cracks; tire for proper inflation, cuts sufficient tread, breaks, and blisters; tailwheel spring, steering and anti-swivel mechanism for security, proper operation, cracks, frayed cables, and worn links.
11. Nose gear shock strut for proper servicing, leaks, cleanliness, proper operation, excessive wear, looseness, visible damage, and security.
12. Nose gear steering linkage for correct alignment, proper steering travel, lubrication, excessive wear, and visible damage or defects.
13. Torque links for lubrication, cracks, binding, security, safetying, and excessive wear.
14. Shimmy dampener for servicing, security, proper operation, leaks, and excessive wear.
15. Speed fairings for security, cleanliness, proper adjustment of scrapers, cracks, tears, separation of laminate, and condition of paint.
16. Parking brake for proper operation, correct adjustment, security, excessive wear, and full release.

AIRFRAME.

1. Pitot and static ports for obstructions; pitot and static lines for security, cracks, kinks, chafing, and moisture; pitot and static systems for leaks; pitot tube for alignment.
2. Aircraft exterior for cracks, metal distortion, broken spotwelds, loose or missing rivets, screws, and bolts, corrosion, condition of paint, and any other apparent damage or defects. Especially check wing and empennage tips for damage.

3. Aircraft structure for corrosion, cracks, metal distortion, loose or missing rivets, screws, and bolts, and evidence of excessive loads.
4. Windows and windshield for cleanliness, proper attachment, sealing, crazing, cracks, deep scratches, and discoloration.
5. Door and window hinges and latches for lubrication, alignment, proper operation, cracks, distortion, binding, and security.
6. Seats for ease of movement, positive locking, security, and seat stops; seat upholstery for rips, tears, holes, and cleanliness; seat structure for cracks, bends, and corrosion; seat rails for security, cracks, and damage.
7. Safety belts for security, proper latching, cuts, tears, fraying, and broken stitching; attaching parts for cracks, deformed metal, and excessive wear.
8. Control column for security, binding, cracks, looseness, and restricted travel; bearings, sprockets, and pulleys for cleanliness, lubrication, binding, security, and excessive wear; cables and chains for security, cleanliness, corrosion, fraying, binding, broken links, and misalignment; turnbuckles for safetying; bellcranks for cracks, distortion, and binding.
9. Control wheels for alignment, binding, security, bent tube, and excessive wear; control lock for proper operation and availability.
10. Instruments for cracked glass, security, proper operation, cleanliness, and legibility of markings; gyro instrument air filters for replacement.
11. Magnetic compass for security, fluid discoloration, leaks, lighting, and proper operation. Accuracy of the compass on all cardinal headings should be checked whenever equipment replacement, modification, or relocation might cause compass deviation, and at engine overhaul periods (or approximately 1000 hours). Compensate the compass and record deviation on the compass correction card.
12. Instrument wiring and plumbing for security, chafing, leaks, cracks, kinks, defective insulation, loose terminals, and interference with control column travel.
13. Instrument panel for security, deteriorated shockmounts, cracks, damaged decorative cover, and legibility of all decals and labeling.
14. Defrosting, heating, and ventilating systems for proper operation, security, chafing, and deterioration; controls for proper rigging, binding, and security; ram air inlets for obstructions.
15. Cabin upholstery and trim for cleanliness, rips, tears, holes, and security; sunvisors for security and proper operation; ash trays for cleanliness and security.
16. Area beneath floor for cleanliness, chafing and security of lines, hoses, and electrical wires; control cables for fouling.
17. Stall warning horn and light for proper operation and security.
18. Electrical switches, circuit breakers, and fuses for security, proper functioning, correct rating, and legibility of placarding; wiring for security, proper insulation, and chafing; spare fuses for availability.
19. Instrument and cabin lights for proper operation, security, and cleanliness; instrument light rheostat for proper functioning.
20. Radios and radio controls for proper operation and security.
21. Radio components in the aft fuselage for security, proper shock mounting, cracked or deformed mounting brackets, and cleanliness.
22. Oxygen system for proper operation, leaks, security of oxygen bottle, lines, regulator, and gage; mounting brackets for cracks, security, and damaged metal; oxygen masks and hoses for availability; oxygen supply for servicing for anticipated requirements.
23. Battery for servicing, security, and corroded terminals; battery cables for condition of terminals, security, and defective insulation; battery box for cracks, corrosion, damaged mounting brackets, and security; vent line for corrosion, security, and obstructions.
24. Firewall for proper sealing, security of grommets and shields, cracks, dents, wrinkles, loose or missing rivets, screws, or bolts, and evidence of excessive loads.
25. Radio antennas for cleanliness, security, proper connections, corrosion, and cracked insulators; external loop housing for security, cleanliness, cracks, loose or missing screws, sealing, and obstructed drain hole.
26. Navigation lights, landing lights, and rotating beacon for proper operation, security, cleanliness, and cracked glass.
27. Stall warning sensing unit for freedom of vane, security, cleanliness, and proper operation.
28. Pitot and stall warning heaters for proper operation.

29. Aileron control system:
    a. Ailerons for correct direction of movement when operated from the cabin.
    b. Pulleys for security, cleanliness, binding, misalignment, cracks, cracked or deformed pulley brackets, and chipped or broken flanges.
    c. Cables for cleanliness, security of terminals, corrosion, fraying, correct tension, and safetying of turnbuckles.
    d. Bellcranks and push-pull rods for cleanliness, lubrication, security, binding, cracks, and distortion.
    e. Fairleads and cable guards for security and excessive wear.
    f. Aileron system for correct rigging and proper travel.
30. Ailerons for security of attachment, smooth operation, security of balance weights, cracks, corrosion, and skin or structural damage.
31. Flap control system:
    a. Pulleys for security, cleanliness, binding, misalignment, cracks, cracked or deformed pulley brackets, and chipped or broken flanges.
    b. Cables for cleanliness, security of terminals, corrosion, fraying, correct tension, and safetying of turnbuckles.
    c. Bellcranks and push-pull rods for cleanliness, lubrication, security, binding, cracks, and distortion.
    d. Fairleads and cable guards for security and excessive wear.
    e. Flap system for correct rigging and proper travel.
    f. Flap control lever for security, proper operation of latch, lubrication, and binding; flap decal for legibility.
    g. Electric flap motor and transmission assembly for security, proper operation, security of electrical wires, and cleanliness; flap motor hinge for cracks, distortion, binding and cleanliness; screwjack threads for cleaning and relubrication as required.
    h. Electric flap position transmitter for security, proper adjustment, proper operation of actuating linkage, cracked or deformed mounting bracket, and tight electrical connections.
    i. Flap position indicator for cracked glass, security, proper indication, cleanliness and legibility of markings.
32. Flaps for security of attachment, smooth operation, binding rollers, cracked, bent, or loose tracks, corrosion, and skin or structural damage.
33. Elevator control system:
    a. Elevators for correct direction of movement when operated from the cabin.
    b. Pulleys for security, cleanliness, binding, misalignment, cracks, cracked or deformed pulley brackets, and chipped or broken flanges.
    c. Cables for cleanliness, security of terminals, corrosion, fraying, correct tension, and safetying of turnbuckles.
    d. Bellcranks and push-pull rods for cleanliness, lubrication, security, binding, cracks, and distortion.
    e. Fairleads and cable guards for security and excessive wear.
    f. Elevator downspring system for security and proper operation. Where the attachment to the push-pull tube is adjustable, check that the downspring system applies load to the elevator as it reaches the streamlined position (with stabilizer leading edge full down).
    g. Elevator system for correct rigging and proper travel.
34. Elevators for security of attachment, smooth operation, security of balance weights, cracks, corrosion, and skin or structural damage.
35. Elevator or stabilizer trim control system:
    a. Elevator trim tab or stabilizer for correct direction of movement when operated from the cabin.
    b. Pulleys and sprockets for security, cleanliness, binding, misalignment, cracks, cracked or deformed brackets and chipped or broken flanges or teeth.
    c. Cables and chains for cleanliness, security of terminals, corrosion, fraying, correct tension, broken or damaged links, and safetying of turnbuckles.
    d. Push-pull rod for security, cracks, and distortion.
    e. Fairleads, cable guards, and chain guards for security and excessive wear.
    f. Trim control wheel for lubrication, cleanliness, security, binding, and operation of friction stop and position indicator; indicator for correct indexing and legible markings.
    g. Trim tab or stabilizer actuators for security, cleanliness, lubrication, proper operation, corrosion, cracks, and excessive wear.
    h. Trim control system for correct rigging and proper travel.

36. Movable stabilizer or elevator trim tab for security of attachment, smooth operation, cracks, corrosion, and skin or structural damage.
37. Rudder control system:
    a. Rudder for correct direction of movement when operated from the cabin.
    b. Rudder pedal assembly for binding, cleanliness, lubrication, security, cracks, bent linkage, and excessive wear.
    c. Pulleys for security, cleanliness, binding, misalignment, cracks, cracked or deformed pulley brackets, and chipped or broken flanges.
    d. Cables for cleanliness, security of terminals, corrosion, fraying, correct tension on "closed" systems, and safetying of turnbuckles.
    e. Fairleads and cable guards for security and excessive wear.
    f. Rudder system for correct rigging and proper travel.
38. Rudder for security of attachment, smooth operation, security of balance weight, cracks, corrosion, and skin or structural damage.
39. Rudder trim control system:
    a. Trim control wheel for lubrication, cleanliness, security, binding, and proper operation.
    b. Position indicator for proper operation, correct indexing, legible markings, and security.
    c. Bungee for cleanliness, security, proper operation, excessive wear, and correct safetying.
    d. Chain for cleanliness, proper tension, broken or damaged links, corrosion, and binding.
    e. Sprockets and connecting shaft for security, binding, misalignment, cracks, excessive wear, cleanliness, and chipped or broken teeth.
    f. Trim control system for correct rigging.
40. Wings, wing struts, and empennage for security of attachment, cracked fittings, loose or missing rivets and bolts, security of hinges, defective bearings, and evidence of elongated bolt holes and excessive wear of attaching parts.

PAPER REQUIREMENTS.

1. Check that all aircraft and engine documents are in accordance with current Civil Air Regulations.
2. Check FAA Airworthiness Directives and Cessna Service Letters for compliance at the time specified by them.

NOTE

A high-time inspection is merely a 100-hour inspection with the addition of an engine overhaul at the Continental-recommended overhaul periods given below. At the time of engine overhaul, constant-speed propellers, governors, and engine accessories should also be overhauled. Throughout the 100-hour inspection, note that certain items need only be inspected every 200 hours, 300 hours, etc.

O-200	1200 hours
O-300	1200 hours
GO-300	1000 hours
O-470	1200 hours
IO-470	1200 hours

This page intentionally left blank.

SECTION 3

FUSELAGE

TABLE OF CONTENTS

	Page
WINDOWS AND WINDSHIELDS	3-1
Cleaning	3-1
Waxing	3-1
Repairs	3-1
Scratches	3-1
Cracks	3-2
WINDSHIELDS	3-2
Removal	3-2
Replacement	3-4
MOVABLE WINDOWS	3-4
SIDE AND REAR WINDOWS	3-4
CABIN DOORS	3-4
Removal and Replacement	3-4
Cabin Door Weatherstrip	3-5
Adjustment	3-5
CABIN DOOR LATCHES	3-5
Removal and Replacement	3-6
BAGGAGE DOORS	3-9
Removal and Replacement	3-9
SEATS	3-9
Removal and Replacement of Forward Seats	3-9
Removal and Replacement of Rear Seats	3-9
Repair of Seats	3-9
CABIN UPHOLSTERY	3-9
Upholstery Materials and Tools	3-9
Soundproofing	3-9
HEADLINER AND CABIN TOP SOUNDPROOFING	3-16
Removal	3-16
Installation	3-16
UPHOLSTERY SIDE PANELS	3-16
Removal and Replacement	3-16
WINDLACE (DOOR SEALS)	3-16
CARPETING	3-16
BAGGAGE COMPARTMENT UPHOLSTERY	3-16
SAFETY BELTS	3-16
Removal and Replacement	3-16
CARGO TIE-DOWN PROVISIONS	3-20

3-1. WINDOWS AND WINDSHIELDS.

3-2. CLEANING. (See paragraph 2-25.)

3-3. WAXING will fill in minor scratches in clear plastic and help protect the surface from further abrasion. Use a good grade of commercial wax applied in a thin, even coat. Bring the wax to a high polish by rubbing lightly with a clean, dry flannel cloth.

3-4. REPAIRS. Damaged window panels and windshield may be removed and replaced if the damage is extensive. However, certain repairs as prescribed in the following paragraphs can be made successfully without removing the damaged part from the airplane. Three types of temporary repairs for cracked plastic are possible. No repairs of any kind are recommended on highly-stressed or compound curves where the repair would be likely to affect the pilot's field of vision. Curved areas are more difficult to repair than flat areas and any repaired area is both structurally and optically inferior to the original surface.

3-5. SCRATCHES on clear plastic surfaces can be removed by hand-sanding operations followed by buffing and polishing, if steps below are followed carefully.

a. Wrap a piece of No. 320 (or finer) sandpaper or abrasive cloth around a rubber pad or wood block. Rub the surface around the scratch with a circular motion, keeping the abrasive constantly wet with clean water to prevent scratching the surface further. Use minimum pressure and cover an area large enough to prevent the formation of "bull's-eyes" or other optical distortions.

CAUTION

Do not use a coarse grade of abrasive. No. 320 is of maximum coarseness.

b. Continue the sanding operation, using progressively finer grade abrasives until the scratches disappear.

c. When the scratches have been removed, wash the area thoroughly with clean water to remove all gritty particles. The entire sanded area will be clouded with minute scratches which must be removed to restore transparency.

d. Apply fresh tallow or buffing compound to a motor-driven buffing wheel. Hold the wheel against the plastic surface, moving it constantly over the damaged area until the cloudy appearance disappears. A 2000-foot-per-minute surface speed is recommended to prevent heating, distortion, or burns.

NOTE

Polishing can be accomplished by hand but it will require a considerably longer period of time to attain the same result as produced by a buffing wheel.

e. When buffing is finished, wash the area thoroughly and dry it with a soft flannel cloth. Allow the surface to cool and inspect the area to determine if full transparency has been restored. Then apply a thin coat of hard wax and polish the surface lightly with a clean flannel cloth.

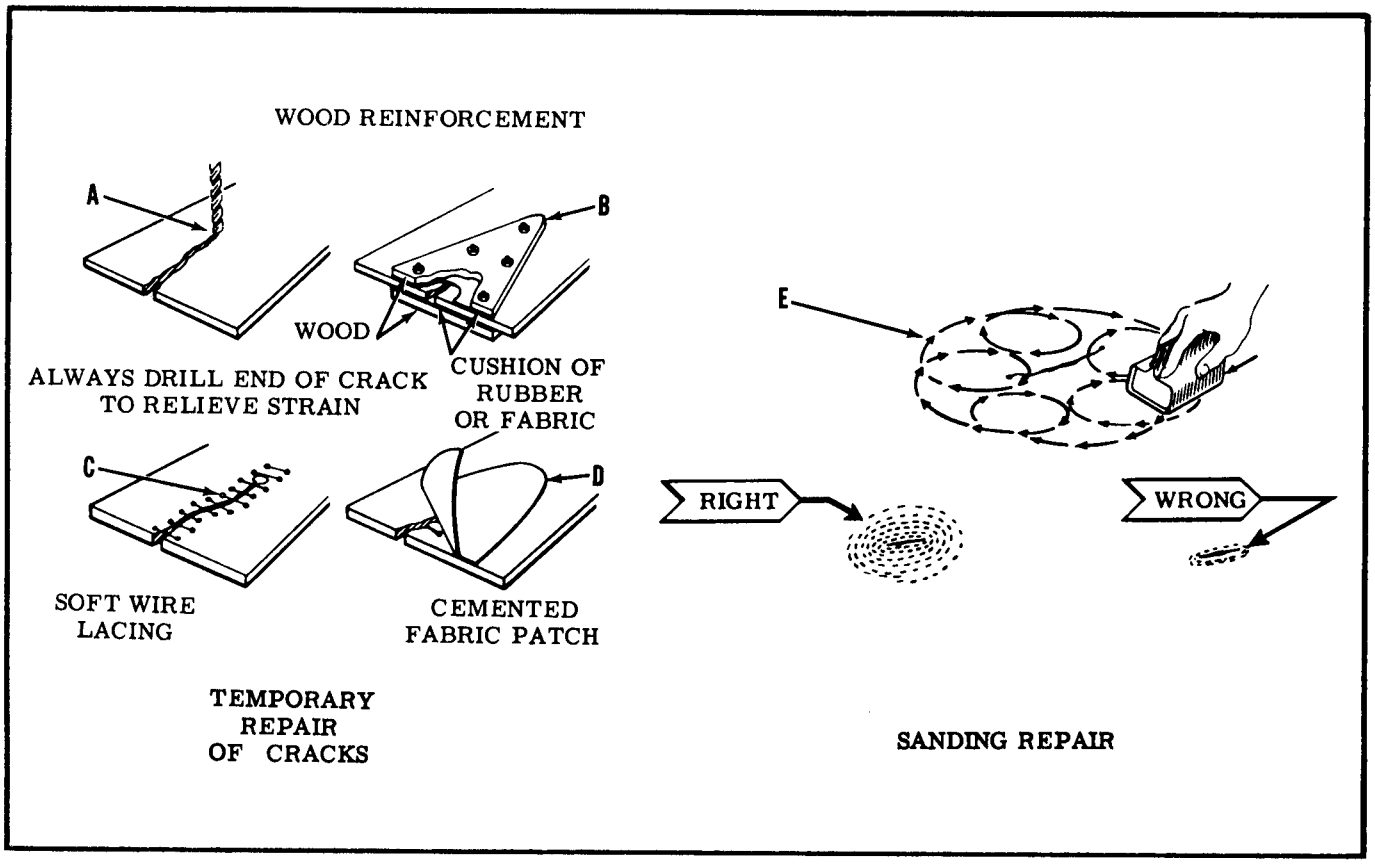

Figure 3-1. Repair of Windows and Windshield

NOTE

Rubbing the plastic surface with a dry cloth will build up an electrostatic charge which attracts dirt particles and may eventually cause scratching of the surface. After the wax has hardened, dissipate this charge by rubbing the surface with a slightly damp chamois. This will also remove the dust particles which have collected while the wax is hardening.

f. Minute hairline scratches can often be removed by rubbing with commercial automobile body cleaner or fine-grade rubbing compound. Apply with a soft, clean, dry cloth or imitation chamois.

3-6. CRACKS. (See figure 3-1.)

a. When a crack appears in a panel, drill a hole at the end of the crack to prevent further spreading. The hole should be approximately 1/8 inch in diameter, depending on the length of the crack and thickness of the material.

b. Temporary repairs to flat surfaces can be effected by placing a thin strip of wood over each side of the surface and then inserting small bolts through the wood and plastic. A cushion of sheet rubber or airplane fabric should be placed between the wood and plastic on both sides.

c. A temporary repair can be made on a curved surface by placing fabric patches over the affected areas. Secure the patches with airplane dope, Specification No. MIL-D-5549; or Lacquer, Specification No. MIL-L-7178. Lacquer thinner, Specification No. MIL-T-6094 can also be used to secure the patch.

d. A temporary repair can be made by drilling small holes along both sides of the crack 1/4 to 1/8 inch apart and lacing the edges together with soft wire. Small-stranded antenna wire makes a good temporary lacing material. This type of repair is used as a temporary measure only, and as soon as facilities are available the panel should be replaced.

3-7. WINDSHIELDS. (See figure 3-2.) Windshields are single-piece, "free-blown" acrylic plastic panels set in sealing strips and held by formed retainer strips riveted to the fuselage. In all aircraft except the 150 series, a windshield centerstrip supports the center of the windshield. Various sealants have been used to prevent leakage around the windshield. However, Presstite No. 579.6 sealing compound used in conjunction with a felt strip at the top and sides, and EC-1202 tape (manufactured by the Minnesota Mining and Mfg. Co., St. Paul, Minnesota) used at the bottom of the windshield will give satisfactory results. If desired, the EC-1202 tape, which is available in different widths and thicknesses, can be used as a sealant at all edges of the windshield.

3-8. REMOVAL.

a. Remove the screws and attaching parts at the windshield centerstrip.

b. Drill out all rivets securing the retainer strip at the front of the windshield.

c. Remove wing fairings over windshield edges.

d. Pull windshield straight forward, out of side and top retainers.

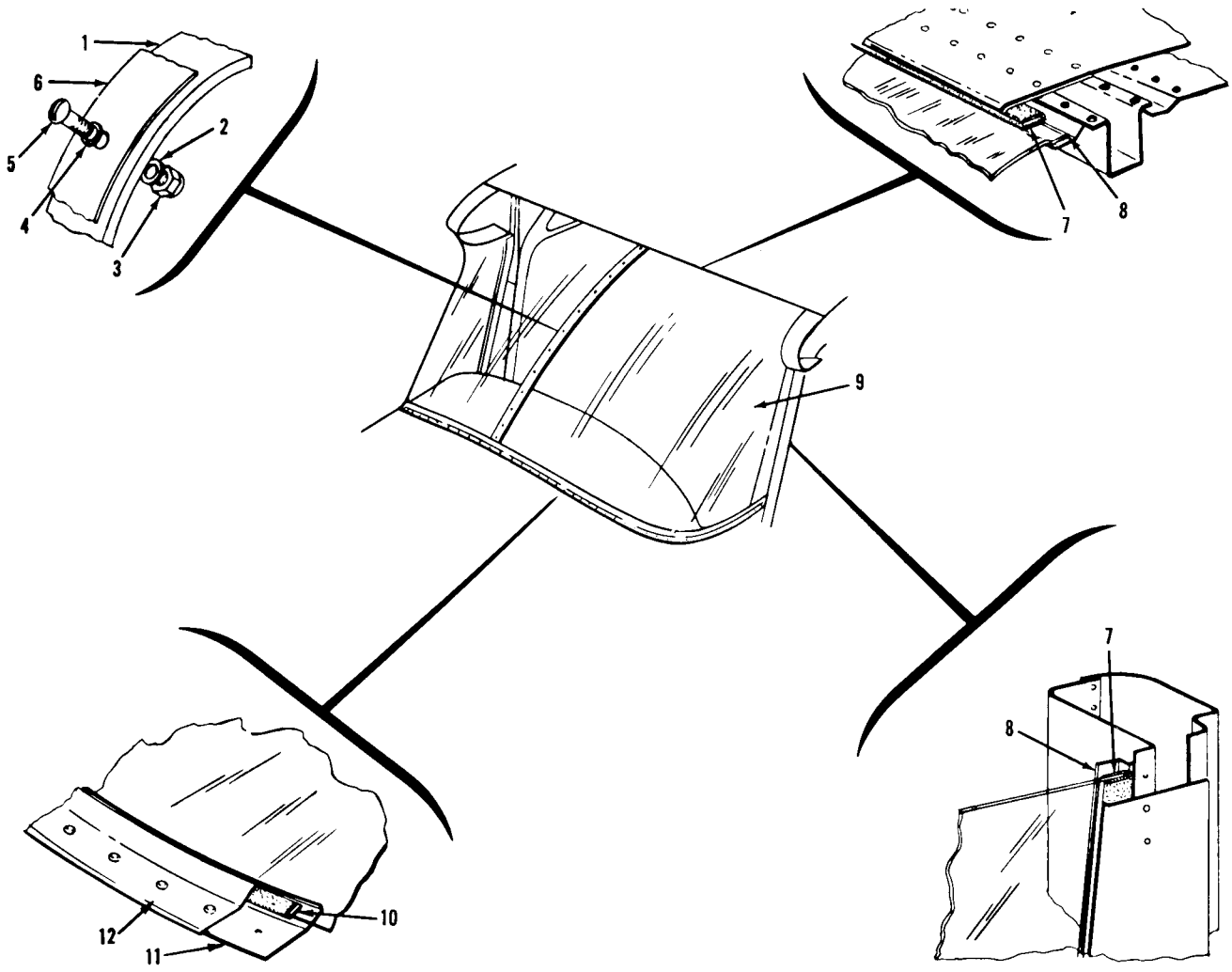

NOTE

PRESSTITE NO. 579.6 SEALER SHOULD BE APPLIED TO ALL EDGES OF WINDSHIELD WHERE FELT SEALING STRIP (7) IS USED. THIS SEALER MAY BE USED TO SEAL ANY LEAKS AROUND WINDSHIELD. WHERE EC-1202 TAPE (10), MANUFACTURED BY THE MINNESOTA MINING AND MFG. CO., ST. PAUL, MINNESOTA, IS USED, THE PRESSTITE SEALER IS NOT REQUIRED.

1. Inner Centerstrip
2. Washer
3. Nut
4. Washer
5. Screw
6. Outer Centerstrip
7. Felt Seal
8. Retainer Strip
9. Windshield
10. Sealing Tape
11. Inner Retainer Strip
12. Outer Retainer Strip

Figure 3-2. Typical Windshield Installation

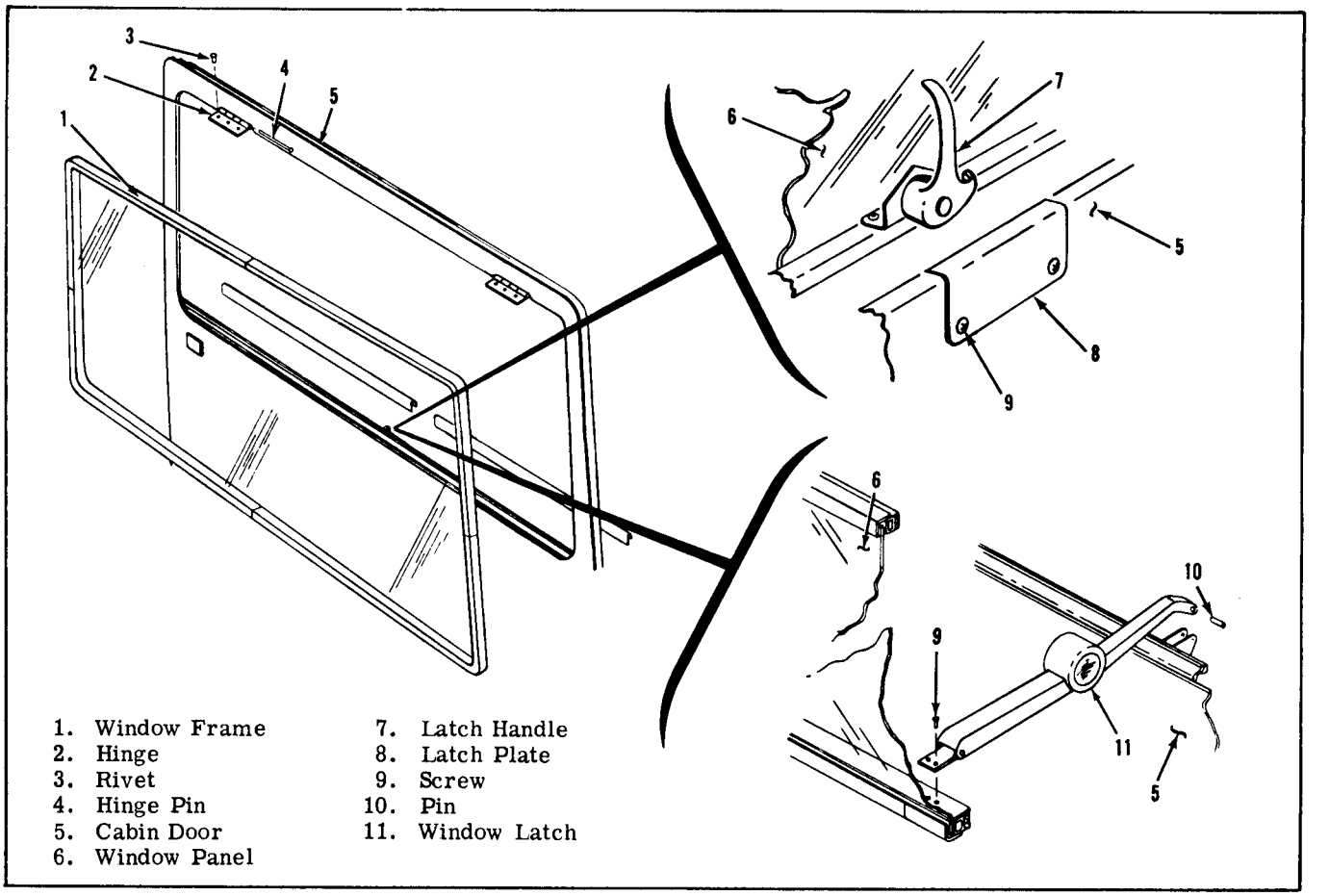

Figure 3-3. Typical Door Windows

3-9. REPLACEMENT.

a. Apply felt strip and sealing compound or sealing tape to all edges of windshield.

b. Reverse steps listed in preceding paragraph to install windshield.

NOTE

Screws and self-locking nuts, or screws and Rivnuts may be used instead of the factory-installed rivets which fasten the front retaining strip to the cowl deck. If the Rivnuts are properly installed and at least No. 6 screws are used, no loss of strength will result.

3-10. MOVABLE WINDOWS (see figure 3-3), hinged at the top, are installed in some doors. Window assemblies, that is, the clear plastic and frame unit, may be replaced by pulling the latch pins and hinge pins depicted in figure 3-3. To remove the frame from the plexiglas, it is necessary to drill out the blind rivets where the frame is spliced. Design changes have been made from time to time, but the rivets to be drilled out will always be the ones securing the frame splices. When replacing a window in a frame, make sure that the sealing strip and an adequate coating of Presstite No. 579.6 sealing compound is used all around the edges of the plastic panel.

3-11. SIDE AND REAR WINDOWS (see figure 3-4), as well as some door windows, are fixed. One or more side windows are located aft of the cabin doors, and beginning in 1962, the Model 182 has a "wrap around" rear window divided at the centerstrip. Fixed windows are mounted in sealing strips and sealing compound, and are held in place by various retainer strips. To replace the side windows, remove upholstery and trim panels and drill out rivets as necessary to loosen or remove the retainer strips. Replace the Model 182 rear window as follows:

a. Remove external centerstrip.

b. Remove upholstery as necessary to expose the retainer strips securing the window to be replaced.

c. Drill out rivets as necessary to remove the retainer strips at the top, bottom and outboard edges of the window. Do not remove any rivets at the centerstrip.

d. Slide the outboard edge of the window down, pulling the inboard edge away from centerstrip hat-section, then remove. The window may be flexed slightly if necessary to clear the hat-section.

e. When installing a window, be sure to use sealing strips and sealing compound to prevent leaks.

3-12. CABIN DOORS. (See figure 3-5.)

3-13. REMOVAL AND REPLACEMENT of cabin doors is effected by removing the screws which attach the hinges. If the type door stop illustrated in figure 3-5 is used, it must also be disconnected.

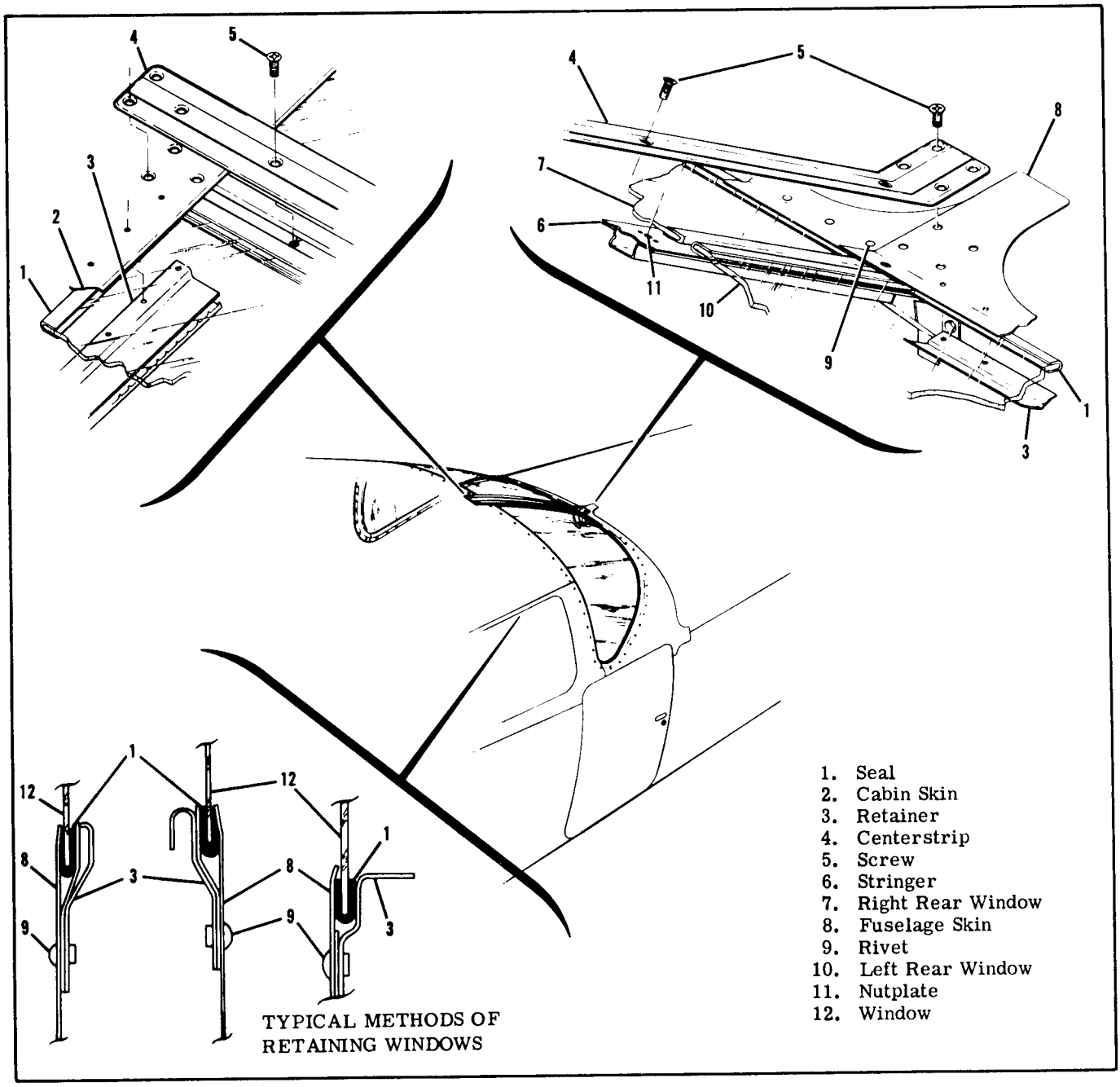

Figure 3-4. Fixed Cabin Windows

Some models have removable hinge pins securing the door hinges to facilitate door removal. The door latch and door handles may be replaced, using figures 3-5 and 3-6 as a guide. When fitting a new door, some trimming of the door skin at the edges may be necessary to achieve a good fit

3-14. CABIN DOOR WEATHER STRIP is cemented around all edges of the door. New weatherstrip may be applied after mating surfaces of weatherstrip and door are clean, dry and free from oil or grease. Apply a thin, even coat of adhesive to each surface and allow to dry until tacky before pressing strip in place. Minnesota Mining Co. No. EC-880 cement is recommended.

3-15. ADJUSTMENT OF CABIN DOOR is provided by adjusting the latch strike plate mounted in the rear door post. The plate should be adjusted to fair in the door skin with the cabin outer skin. To adjust the plate, loosen the attachment screws, reposition the strike plate, and then tighten screws.

3-16. CABIN DOOR LATCHES are held in place by screws accessible with the door upholstery panel removed. Latches are actuated by a flush-mounted outside door handle and a conventional inside door handle. The left cabin door is equipped with a key-operated lock and the right cabin door either is equipped with a thumb latch or can be locked by inside handle rotation. On later Model 150 airplanes, the inside door handles

are flush, similar to the outside handles.

3-17. REMOVAL AND REPLACEMENT. (See figure 3-6.)

a. Remove the inside door handle, arm rest, and door upholstery panel. The door handles are secured with spring clips or pins. Late Model 150 door handles are secured with clevis pins and cotter pins.

b. Remove screws securing door handle bearing plate.

c. Remove screws, pins and cotter pins as necessary to disconnect and remove door latching mechanism, and work removed parts out of the door.

d. Remove door lock assembly by removing lock lever and then removing door lock attaching nut and washer.

e. Replace door lock and latch by reversing steps listed above. Set inside door handle on its splines in the same position as the opposite door handle.

NOTE

On some later models, the door latch mechanism is installed in a removable panel for ease of maintenance.

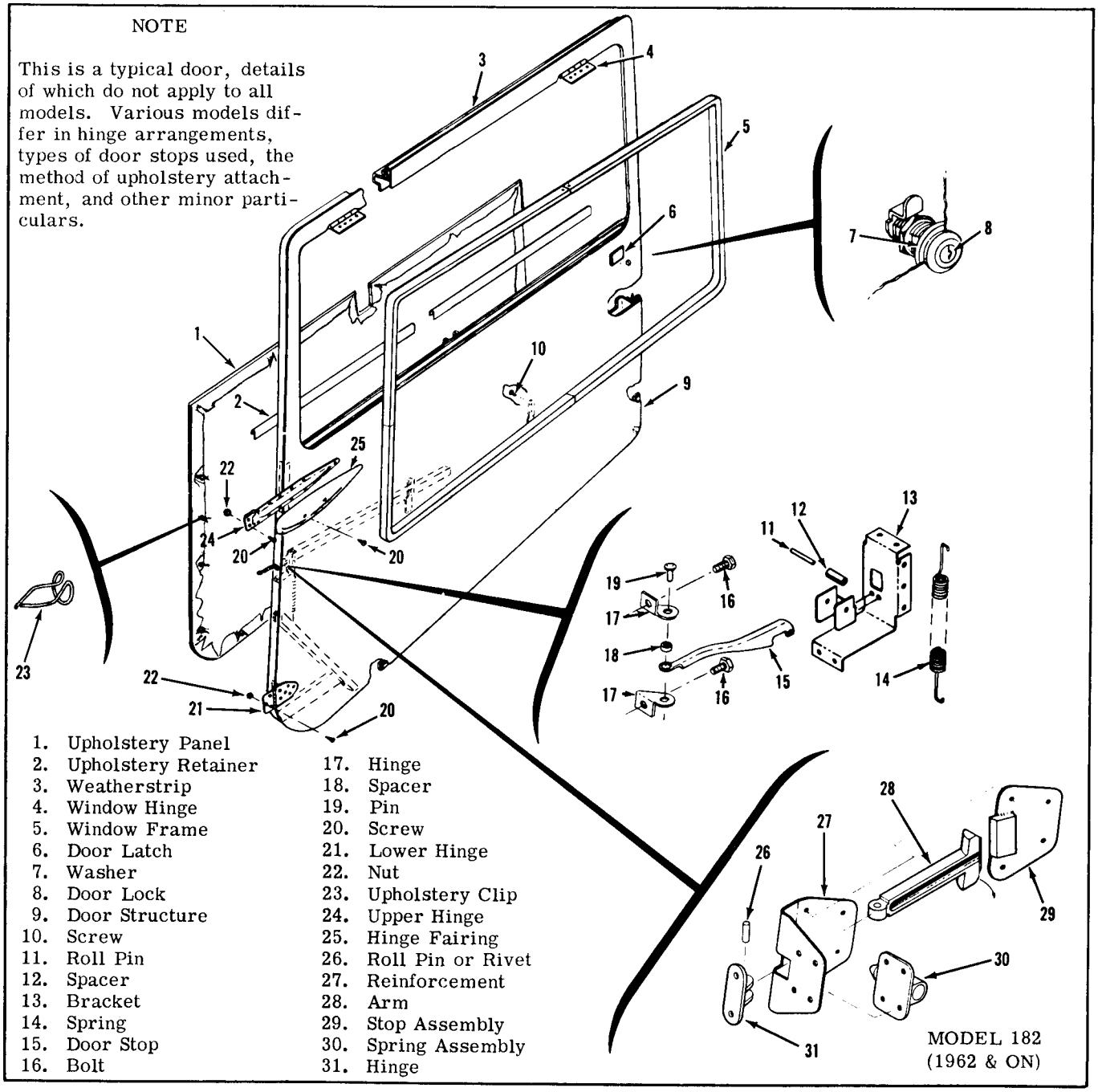

Figure 3-5. Cabin Doors

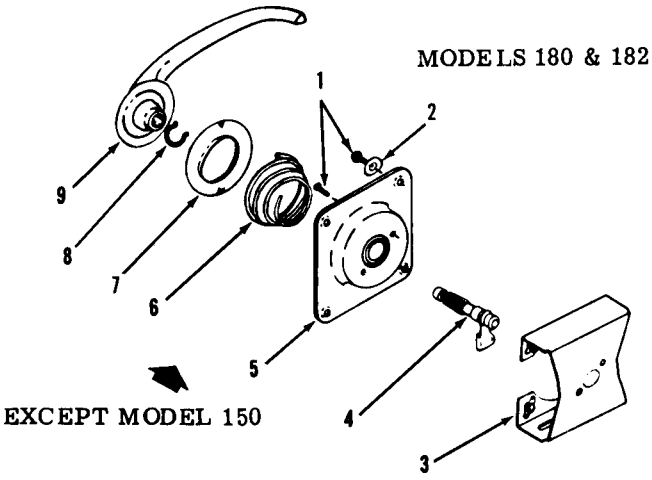

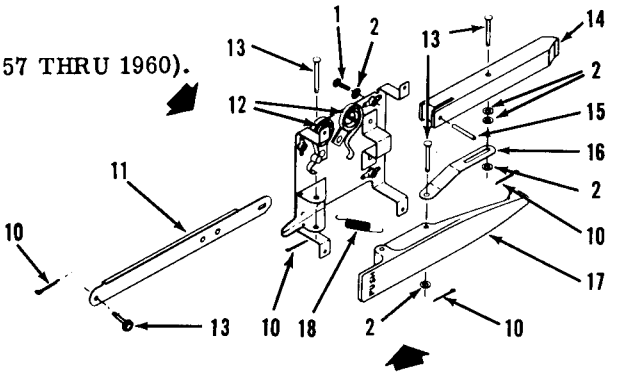

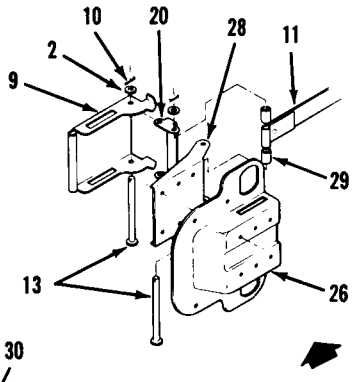

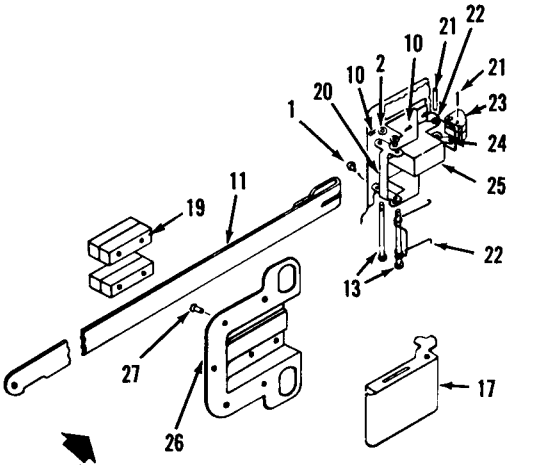

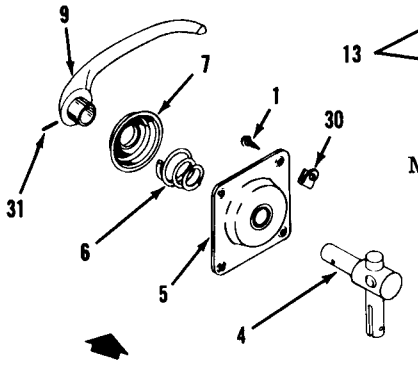

1. Screw
2. Washer
3. Bracket
4. Shaft Assembly
5. Bearing Plate
6. Spring
7. Escutcheon
8. Clip
9. Inside Handle
10. Cotter Pin
11. Strap
12. Spring
13. Clevis Pin
14. Latch Bolt
15. Roll Pin
16. Pull Bar
17. Outside Handle
18. Spring
19. Spacer
20. Latch Spacer
21. Shaft
22. Spring
23. Catch
24. Pull Bar
25. Housing
26. Latch Pan
27. Rivet
28. Bracket
29. Spacer
30. Nut
31. Pin

Figure 3-6. Cabin Door Latches

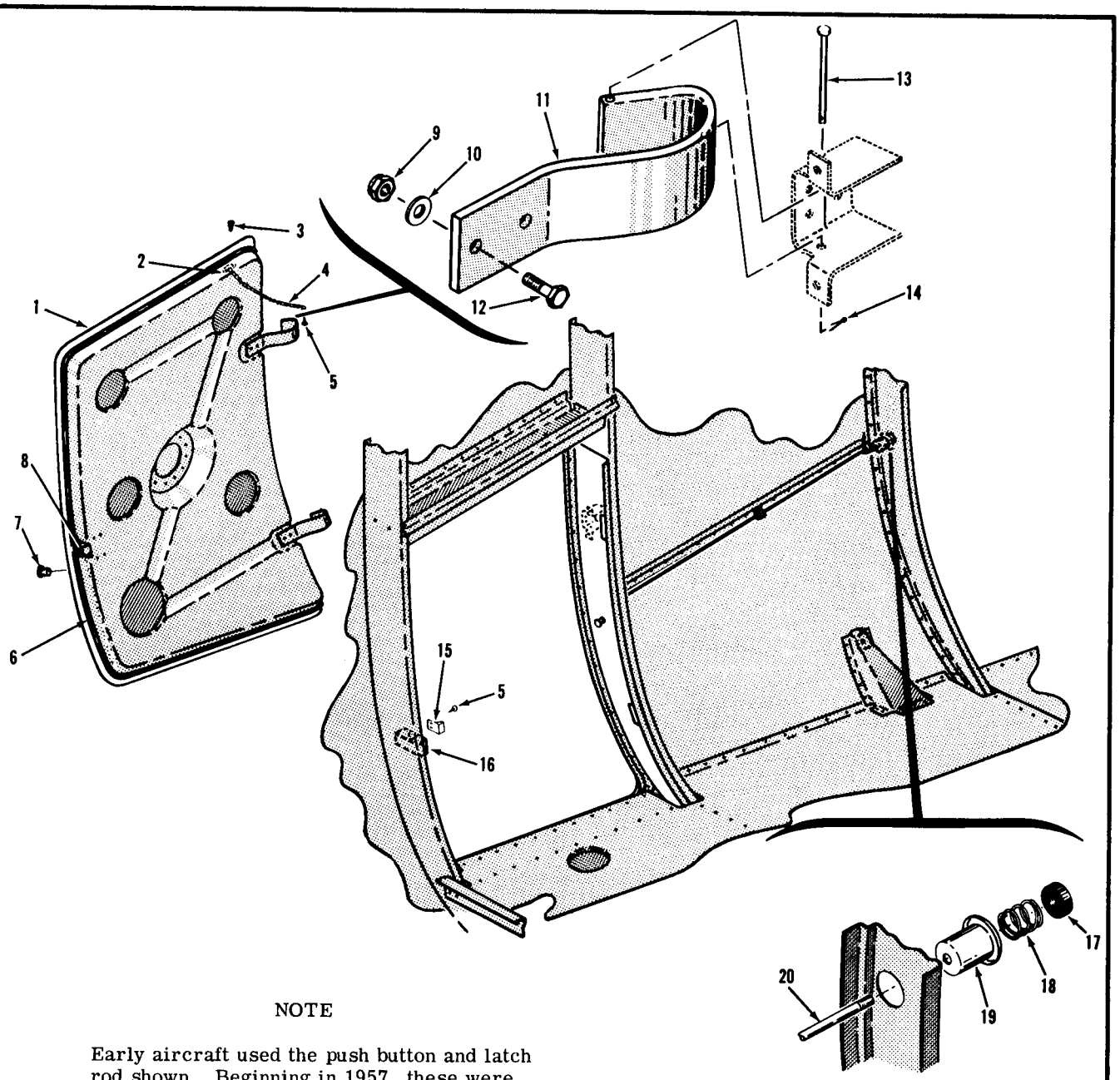

NOTE

Early aircraft used the push button and latch rod shown. Beginning in 1957, these were replaced with a flush-mounted outside handle and a key-operated lock. Beginning in 1962, the baggage door latch can be operated from the inside, after the door is unlocked, on all models except the 182.

1. Baggage Door
2. Nutplate
3. Screw
4. Door Stop Chain
5. Screw
6. Door Seal
7. Lock
8. Latch
9. Nut
10. Washer
11. Hinge
12. Bolt
13. Clevis Pin
14. Cotter Pin
15. Strike Plate
16. Reinforcement
17. Push Button
18. Spring
19. Retainer
20. Latch Rod

Figure 3-7. Baggage Door

3-18. BAGGAGE DOORS.

3-19. REMOVAL AND REPLACEMENT of the baggage door involves removing the hinge pins and disconnecting the door stop. Typical baggage door installation is shown in figure 3-7.

3-20. SEATS. (See figures 3-8 thru 3-12A.)

3-21. REMOVAL AND REPLACEMENT OF FORWARD SEATS is accomplished by removing the stops on the seat rails, sliding the seat aft until the rear rollers may be lifted from the rails, then sliding the seat forward to release the front rollers. Be sure to replace the stops after the seats are installed. Standard Model 150 seats may be removed by unlatching the top of the seat back and releasing the spring loaded pins at the bottom of the seat back. After removal of the seal back, the seat bottom can be pivoted at the forward pins for removal. Headrests may be removed as desired.

3-22. REMOVAL AND REPLACEMENT OF REAR SEATS. The rear seat is removed by unlatching the top of the seat back and removing the bolts which secure the seat bottom to the fuselage. Remove the seat back pivot bolts to remove only the seat back. Use care not to damage upholstery when removing seats. Additional clearance may be gained by removing one or more arm rests. Headrests may be removed as desired. The optional center stowable seat for the Model 185 is removed by releasing the upper and lower catches. The center seat bottom is removed by unscrewing the four eyebolts which attach it to the fuselage. The rear stowable seat on the Model 185, as well as a similar installation used as an auxiliary seat on some other models, is removed by unsnapping the seat back cushion and removing the pivot bolts securing the seat bottom. The seat bottom may be pivoted up against the baggage compartment rear wall.

3-23. REPAIR OF SEATS may be accomplished by replacing defective components. Paraffin wax rubbed on seat rails will ease sliding the front seats fore and aft.

3-24. CABIN UPHOLSTERY. (See figure 3-13.)

3-25. Due to the wide selection of fabrics, styles and colors, it is impossible to depict each particular type of upholstery. The following paragraphs describe general procedures which will serve as a guide in removal and replacement of upholstery. Major work, if possible, should be done by an experienced trim mechanic. If the work must be done by a mechanic unfamiliar with upholstery practices, the mechanic should make careful notes during the removal of each item to facilitate its replacement later.

3-26. UPHOLSTERY MATERIALS AND TOOLS will vary with the job. Scissors for trimming upholstery to size and a dull-bladed putty knife for wedging the material beneath retainer strips are the only tools required for most trim work. Adhesive cement such as U.S. Royal No. 6134 is necessary for holding soundproofing mats and headliner edges in place. Refer to paragraph 19-64 for Royalite repairs.

3-27. SOUNDPROOFING the cabin is accomplished by the installation of spun glass mat-type insulation panels installed in the firewall, ceiling, wing root, and door panel areas. To assure proper soundproofing of the cabin, these insulation mats must be reinstalled in their original location. In addition to the mats installed inside the cabin, a soundproofing panel is placed inside the gap between the wing and fuselage before the gap is covered by the wing root fairing. The inner surface of some skins are brushed with a sound-deadener composition to help reduce noise.

SHOP NOTES:

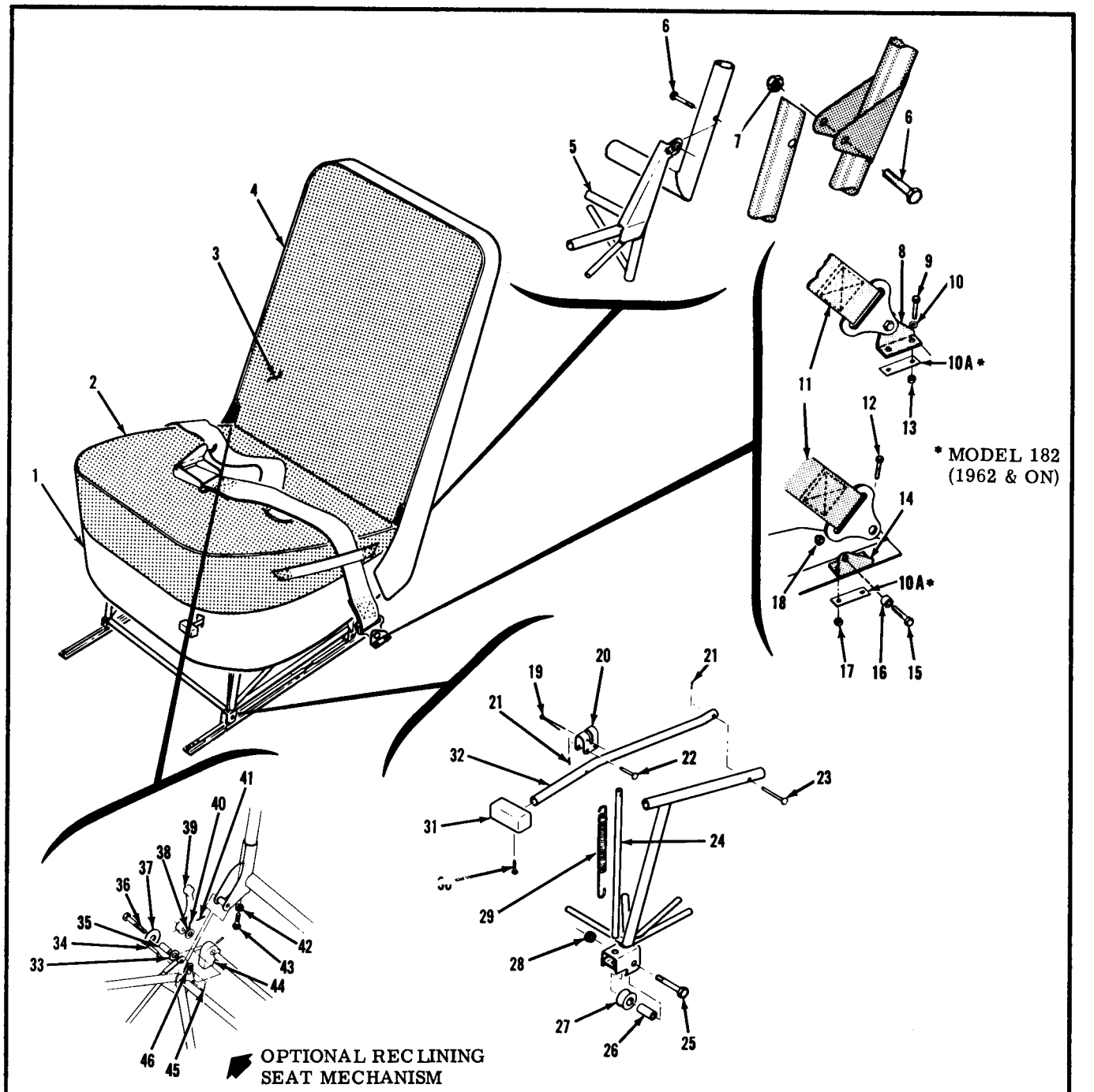

1. Front Seat Skirt
2. Bottom Cushion
3. Cover Assembly
4. Seat Back Assembly
5. Bottom Framework
6. Bolt
7. Nut
8. Safety Belt Bracket
9. Bolt
10. Washer
10A. Plate
11. Safety Belt
12. Bolt
13. Nut
14. Safety Belt Bracket
15. Bolt
16. Spacer
17. Nut
18. Nut
19. Cotter Pin
20. Clevis
21. Cotter Pin
22. Clevis Pin
23. Clevis Pin
24. Seat Adjustment Pin
25. Bolt
26. Bushing
27. Roller
28. Nut
29. Coil Spring
30. Screw
31. Seat Adjustment Knob
32. Handle Tube
33. Washer
34. Pin
35. Bushing
36. Bolt
37. Washer
38. Washer
39. Handle
40. Rollpin
41. Rollpin
42. Stop
43. Screw
44. Cam
45. Cotter Pin
46. Nutplate

Figure 3-8. Typical Front Seat

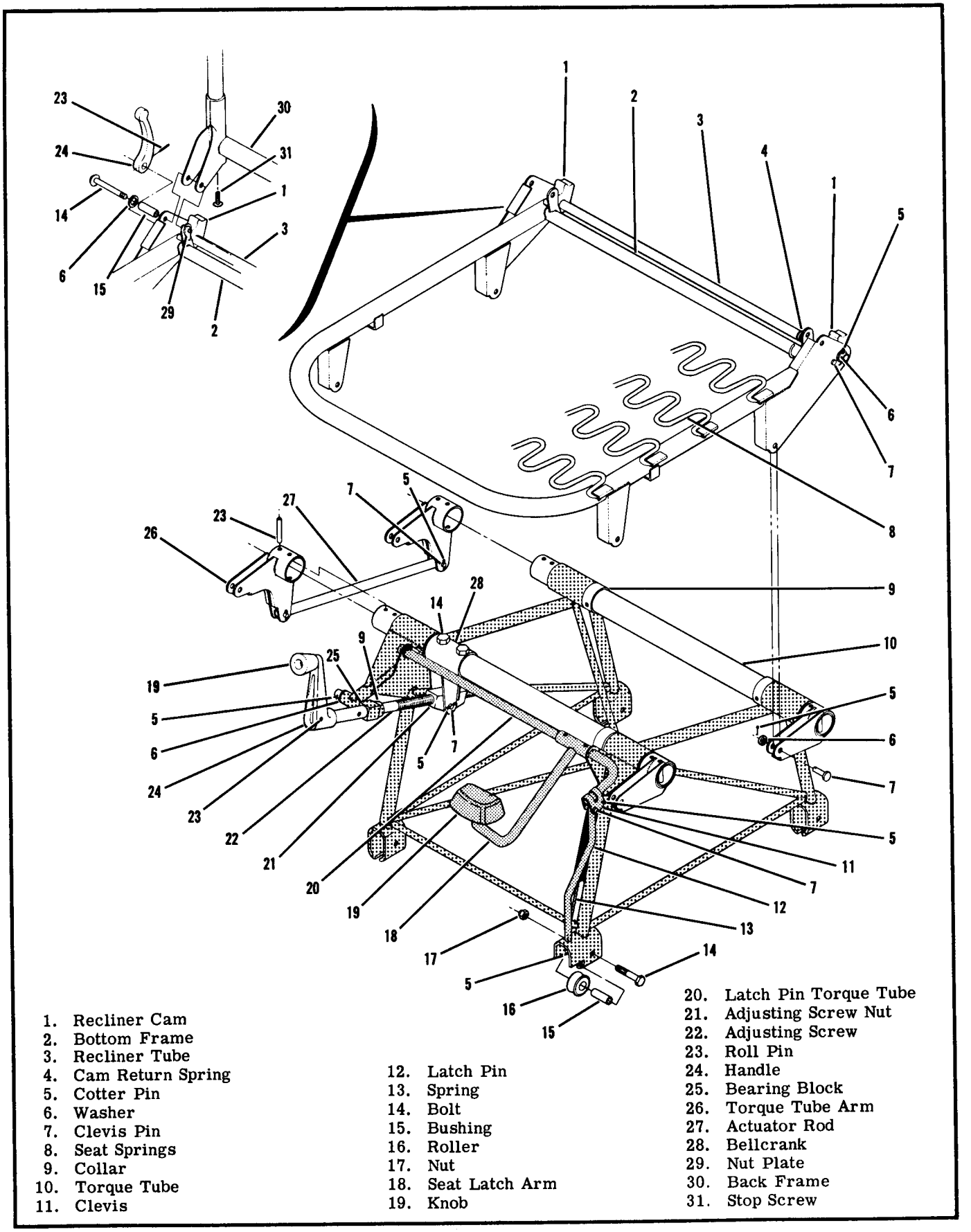

Figure 3-8A. Vertically Adjustable Seat Mechanism

SHOP NOTES:

NOTE

Design changes, including contours, materials, and methods of attachment, have occurred from time to time.

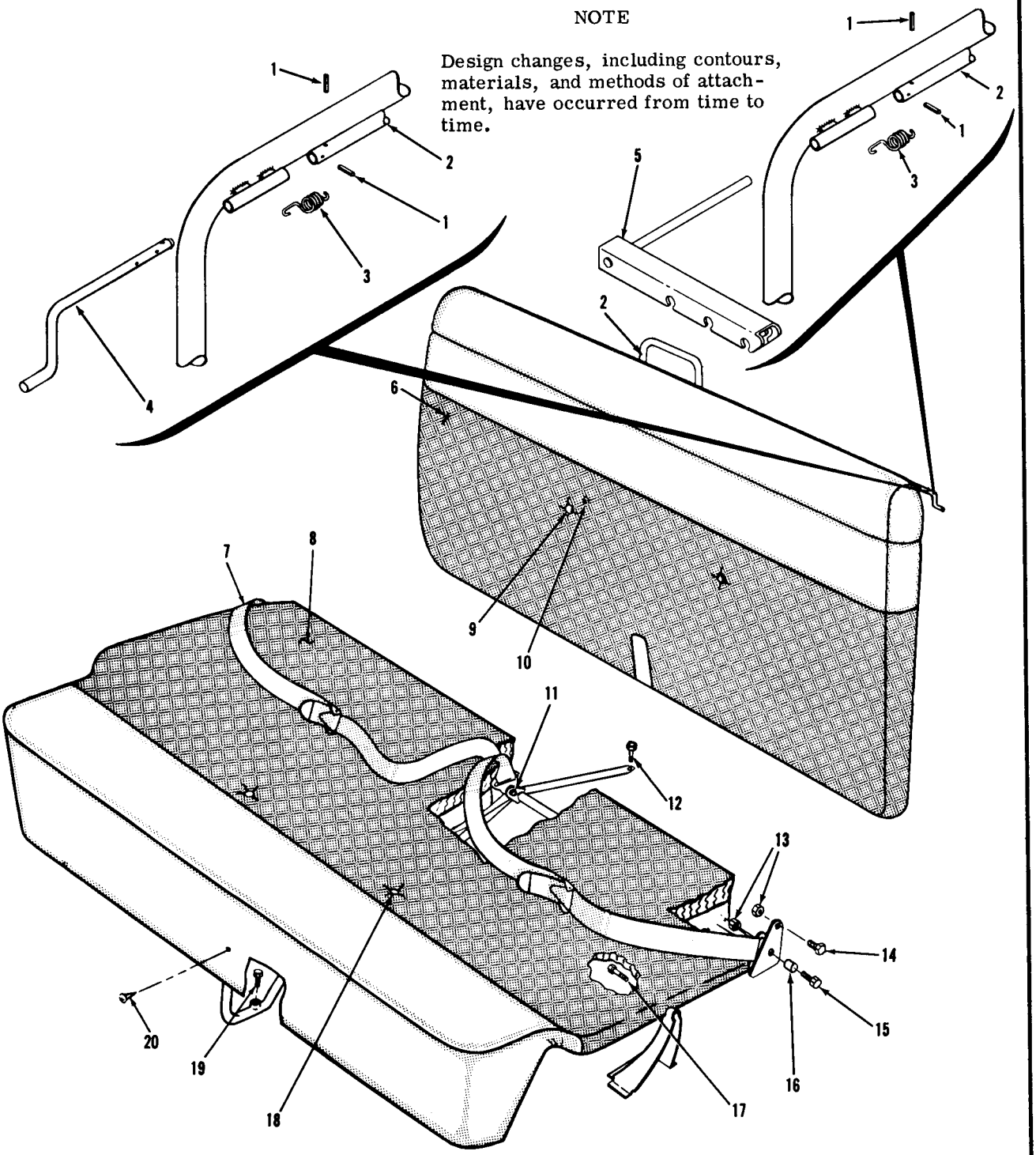

1. Roll Pin
2. Latch Handle
3. Latch Spring
4. Latch
5. Latch Assembly (Some Airplanes)
6. Cover Assembly (Some Airplanes)
7. Safety Belt
8. Cover Assembly
9. Upholstery Button
10. Tufting Button (Some Airplanes)
11. Bolt
12. Bolt
13. Nuts
14. Bolt
15. Bolt
16. Spacer
17. Bolt
18. Tufting Button
19. Bolt
20. Screw

Figure 3-9. Typical Rear Seat

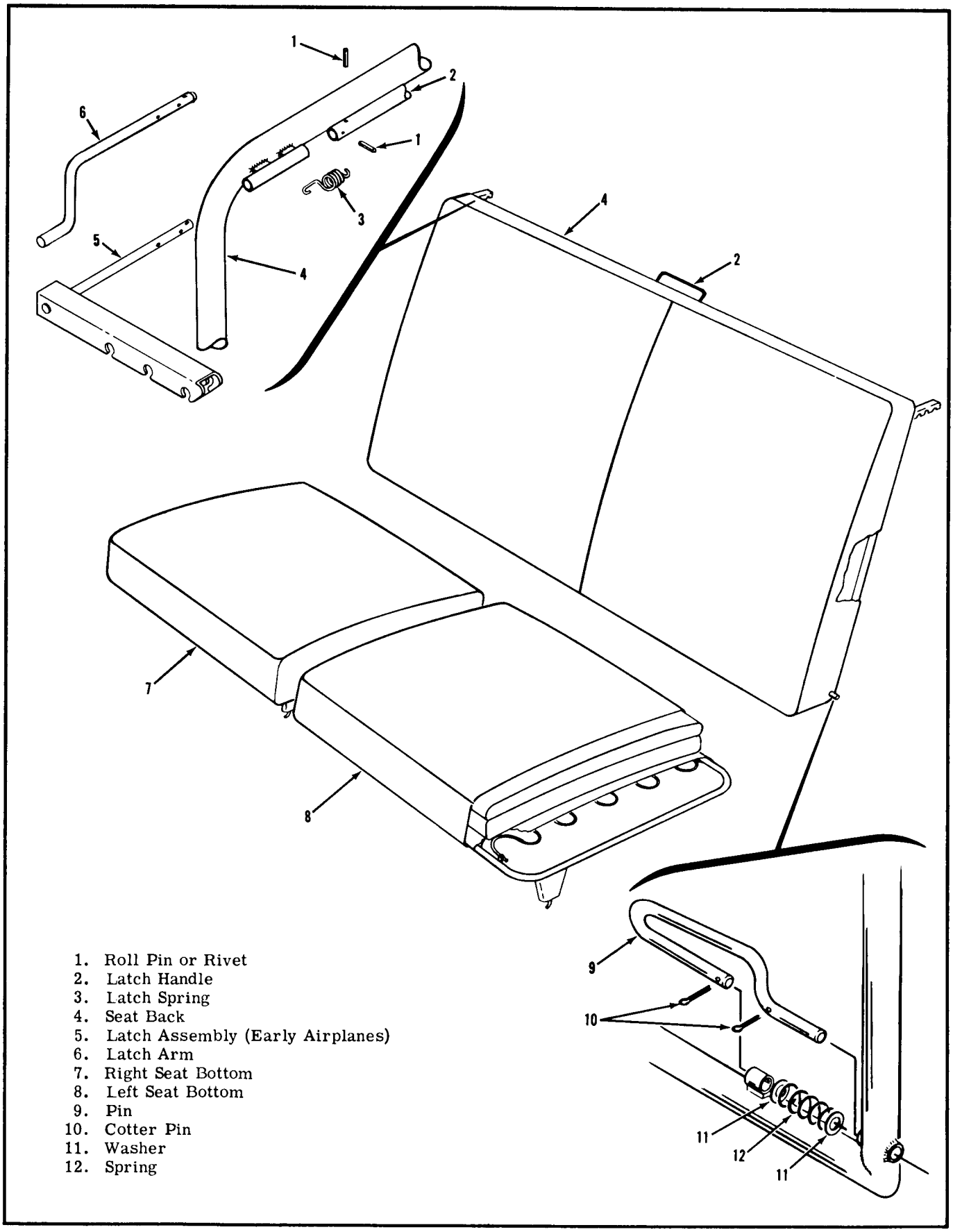

1. Roll Pin or Rivet
2. Latch Handle
3. Latch Spring
4. Seat Back
5. Latch Assembly (Early Airplanes)
6. Latch Arm
7. Right Seat Bottom
8. Left Seat Bottom
9. Pin
10. Cotter Pin
11. Washer
12. Spring

Figure 3-10. Model 150 Seats

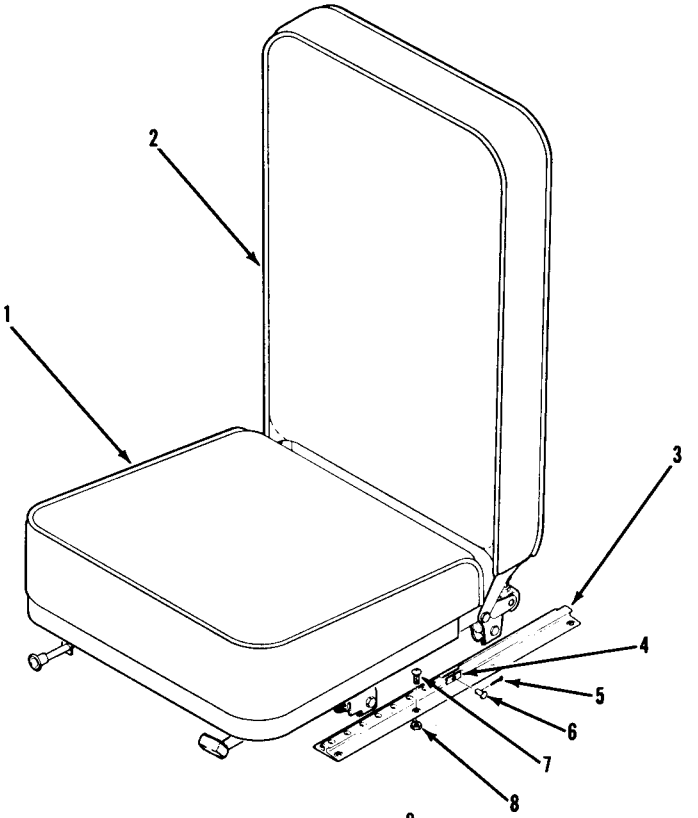

NOTE

The baggage and cargo tie downs for the Model 150, illustrated in figure 3-19, must be provided when reclining seats are installed.

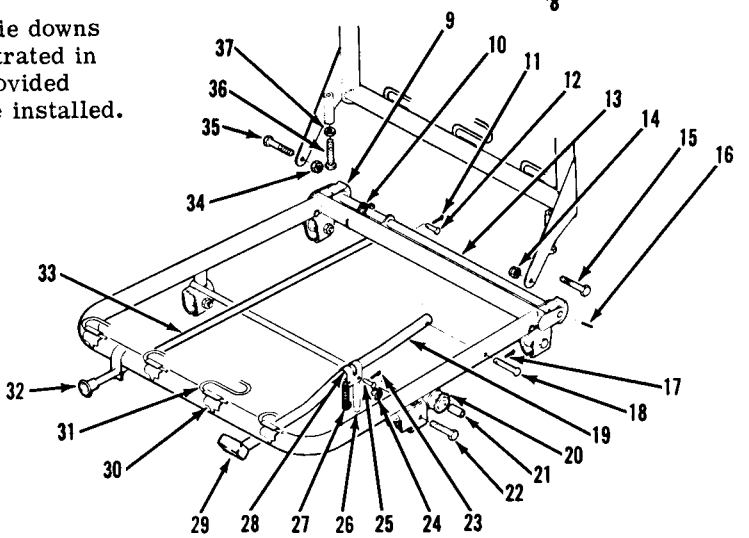

1. Seat Bottom
2. Seat Back
3. Seat Rail
4. Seat Stop
5. Cotter Pin
6. Clevis Pin
7. Screw
8. Nut
9. Cam
10. Spring
11. Cotter Pin
12. Clevis Pin
13. Shaft
14. Nut
15. Bolt
16. Rollpin
17. Cotter Pin
18. Clevis Pin
19. Seat Adjustment Tube
20. Roller
21. Bushing
22. Bolt
23. Cotter Pin
24. Nut
25. Clevis Pin
26. Seat Adjustment Pin
27. Spring
28. Seat Adjustment Clevis
29. Seat Adjustment Knob
30. Clip
31. Seat Spring
32. Seat Reclining Knob
33. Seat Reclining Tube
34. Nut
35. Bolt
36. Bolt
37. Nut

Figure 3-11. Model 150 Optional Reclining Seats

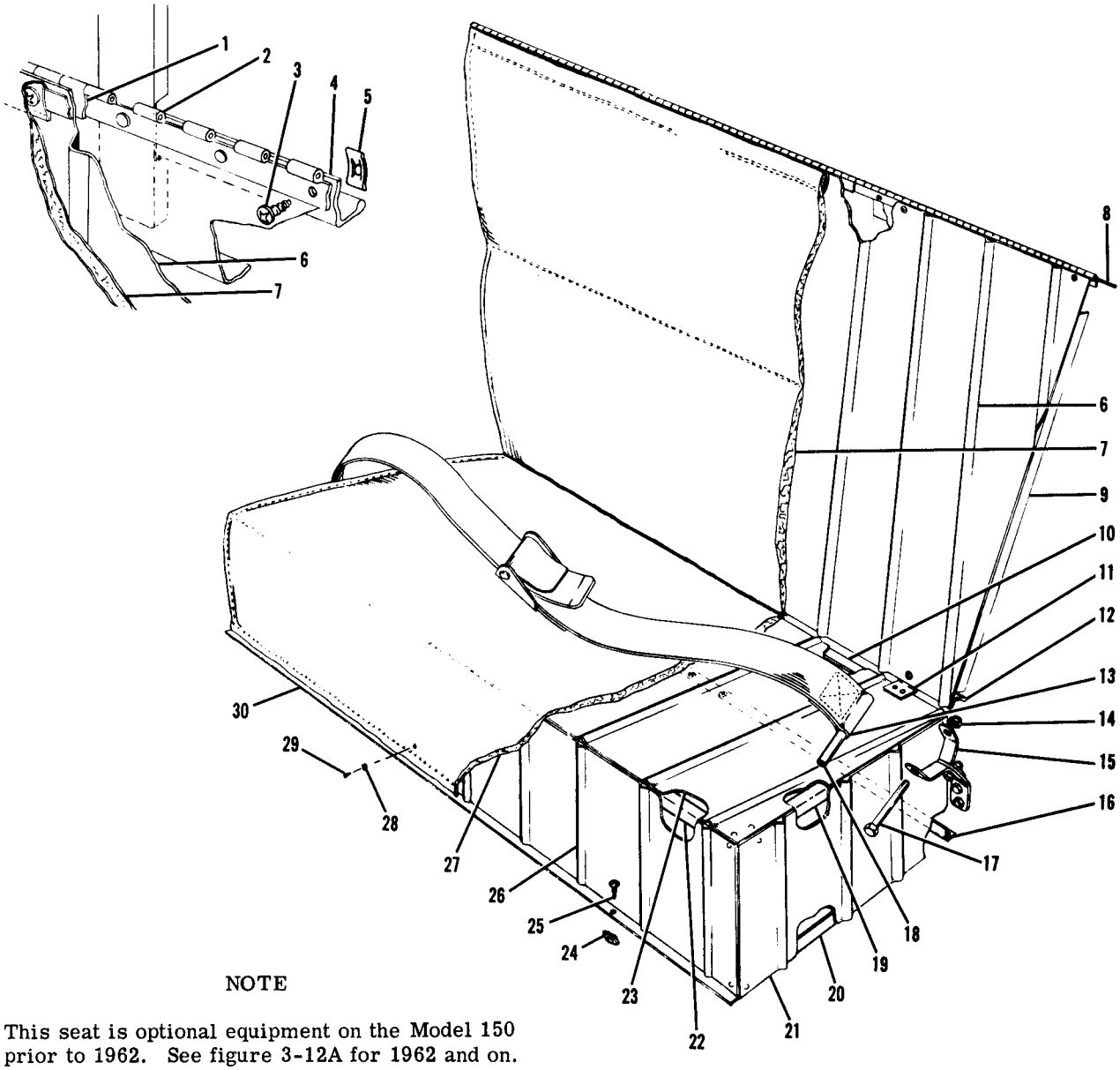

NOTE

This seat is optional equipment on the Model 150 prior to 1962. See figure 3-12A for 1962 and on.

1. Forward Hinge Half
2. Rear Hinge Half
3. Screw
4. Support Angle
5. Nut
6. Seat-Back Panel
7. Seat-Back Pad
8. Hinge Pin
9. Seat-Back Side Angle
10. Seat-Bottom Upper Rear Angle
11. Stop Angle
12. Seat-Back Stiffener Angle
13. Safety Belt
14. Nut
15. Safety Belt Bracket
16. Seat-Bottom Lower Rear Angle
17. Bolt
18. Bushing
19. Seat-Bottom Upper Side Angle
20. Seat-Bottom Lower Side Angle
21. Seat-Bottom Side Panel
22. Seat-Bottom Upper Front Angle
23. Seat-Bottom Top Panel
24. Nutplate
25. Screw
26. Seat-Bottom Front Panel
27. Seat-Bottom Pad
28. Finishing Washer
29. Screw
30. Seat-Bottom Lower Front Angle

Figure 3-12. Model 150 Child Seat

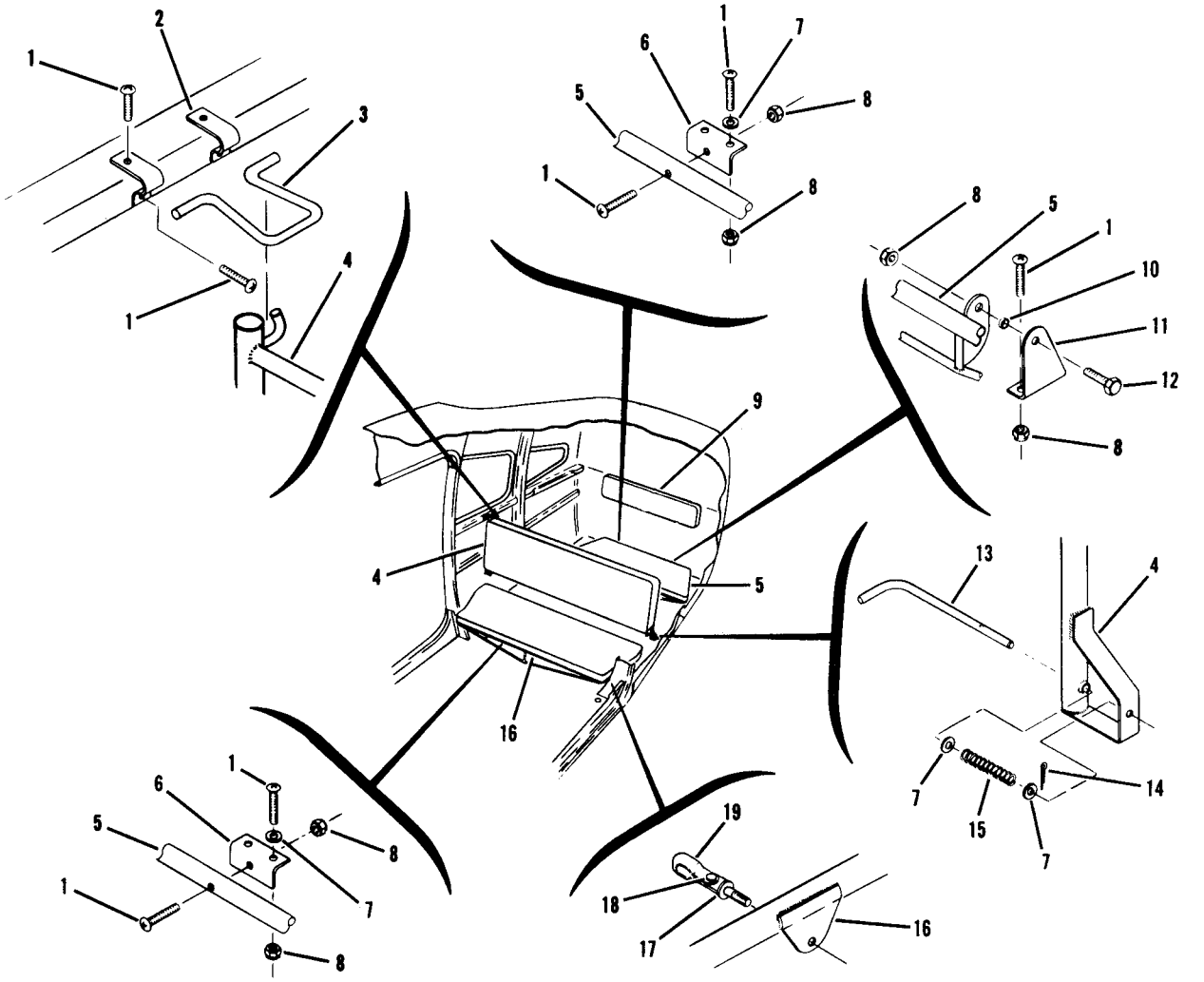

NOTE

See figure 3-18 for safety belts and cargo tie-downs.

Beginning in 1962, an auxiliary seat installation similar to the Model 185 rear stowable seat is optional equipment on all models except the 182.

1. Screw
2. Clamp
3. Support
4. Center Seat Back
5. Rear Seat Bottom
6. Clip
7. Washer
8. Nut
9. Rear Seat Back
10. Spacer
11. Hinge
12. Bolt
13. Handle
14. Cotter Pin
15. Spring
16. Center Seat Bottom
17. Eyebolt
18. Clevis Pin
19. Cable Yoke

Figure 3-12A. Model 185 Stowable Seats

SHOP NOTES:

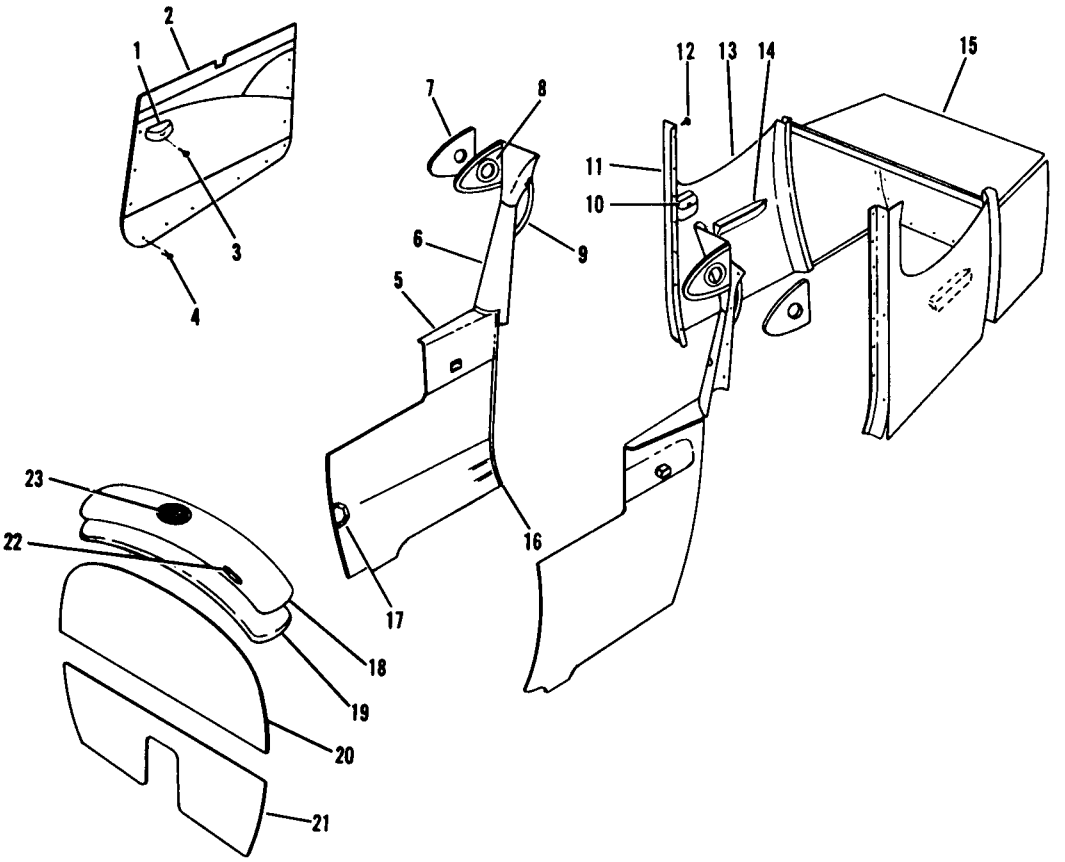

NOTE

Many changes in the design of interior upholstery and trim have occurred from year to year. The shape, size, material, method of attachment, and the location of ash trays, arm rests, and sound-proofing, vary with the different models, their date of manufacture, and the configuration of each airplane. Royalite, instead of fabric, is used for upholstery panels in utility versions of the Model 185. The Model 182 (1962 and on) has a metal cover which shields aileron chains at the firewall.

1. Arm Rest
2. Door Panel
3. Screw
4. Upholstery Fastener
5. Forward Side Panel
6. Door Post Cover
7. Sound-proofing
8. Ventilation Grommet
9. Assist Strap
10. Ash Tray
11. Rear Door Post Fairing
12. Screw
13. Aft Side Panel
14. Arm Rest
15. Baggage Compartment Upholstery
16. Retainer
17. Retainer
18. Cowl Deck Cover
19. Cowl Deck Sound-proofing
20. Upper Firewall Panel
21. Lower Firewall Panel
22. Defroster Outlet
23. Radio Ventilator Screen

TYPICAL EXCEPT MODEL 150

Figure 3-13. Upholstery Panels

3-28. HEADLINER AND CABIN TOP SOUNDPROOFING. (See figures 3-14 and 3-16.)

3-29. REMOVAL.
a. Remove sun visors, all inside finish strips and plates, door post upper shields, front spar trim shield, dome light panel, rear baggage shelf and any other visible retainers securing the headliner.
b. Work edges of headliner free from metal tabs which hold the fabric.
c. Starting at the front of the headliner, work the headliner down, removing screws through metal tabs which hold the wire bows to the cabin top. Pry loose the outer ends of the bows from the retainers above the doors. Detach each wire bow in succession.

NOTE

Always work from front to rear when removing the headliner; it is impossible to detach the wire bows when working from rear to front.

d. Remove the headliner assembly and bows from the airplane.

NOTE

Due to the difference in length and contour of the wire bows, each bow should be tagged to assure proper location in the headliner.

e. Remove the spun glass soundproofing panels.

NOTE

The lightweight soundproofing panels are held in place with industrial rubber cement.

3-30. INSTALLATION.
a. Before installing headliner, check all items concealed by the headliner to see that they are mounted securely. Use wide cloth tape to secure loose wires to the fuselage, and to seal any openings in the wing roots. Straighten any tabs bent during removal of the headliner.
b. Apply cement to inside of skin in areas where soundproofing panels are not supported by wire bows, and press soundproofing in place.
c. Insert wire bows into headliner seams, and secure rearmost edges of headliner after positioning the two bows at the rear of the headliner. Stretch the material along the edges to make sure it is properly centered, but do not stretch it tight enough to destroy the ceiling contours or distort the wire bows. Secure the edges of the headliner with sharp tabs or, where necessary, rubber cement.
d. Work the headliner forward, installing each wire bow in place with the tabs. Wedge the ends of wire bows into the retainer strips. Stretch the headliner just taut enough to avoid wrinkles and maintain a smooth contour.
e. When all bows are in place and fabric edges are secured, trim off any excess fabric and reinstall all items removed.

3-31. UPHOLSTERY SIDE PANELS. (See figures 3-13 and 3-16.)

3-32. REMOVAL AND REPLACEMENT.
a. Remove front and rear seats.
b. Remove the sidewall front panels by removing the attaching screws and retaining strips.
c. Remove door panel assembly by removing door handle and arm rest, then pulling out on panel at each spring clip. Work the panel down, free of top retainer channel.

NOTE

Automotive type clips attach the door upholstery panels. A dull putty knife is an excellent tool for prying loose the panel fasteners.

d. Remove the screws aft of the door posts securing the rear arm rests from outside the fuselage. Remove rear ash trays and aft upholstery panels.
e. Reverse the steps above to reinstall panels.

3-33. WINDLACE (DOOR SEAL) is installed to provide additional sealing and provide an ornamental edging for the door opening. The windlace is held in position by sheet metal screws and is mounted between the upholstery panels or trim and the doorpost structure.

3-34. CARPETING. Cabin area and baggage compartment carpeting is held in place by rubber cement, small sheet metal screws, and retaining strips. When fitting a new carpet, use the old one as a pattern for trimming and marking the screw holes. Utility versions of the Model 185 have a rubber mat instead of carpeting on the floor. Royalite is used on the door and side panels on these aircraft.

3-35. BAGGAGE COMPARTMENT UPHOLSTERY is washable, fabric-backed plastic or Royalite, held in place by small screws and retainers. A baggage shelf is provided in the upper part of the baggage compartment on most models. The floor covering is cemented to the floor on some models, and is secured by screws and retaining strips on others.

3-36. SAFETY BELTS. (See figures 3-8, 3-9 and 3-18.)

3-37. REMOVAL AND REPLACEMENT.
a. Front seat safety belts may be removed by removing the bolts, spacers, and nuts that secure them to their safety belt attachment brackets. The brackets are bolted to floorboard structure and may be removed if necessary.
b. Rear seat safety belts are attached directly to the seat bottom structure with bolts, spacers and nuts. Rear seat belts may be removed if necessary.
c. Model 185 stowable-seat safety belts are quickly removable to permit rapid change from passenger to cargo configuration. After unsnapping the safety belts, the safety belt attachment fittings are used to tie down cargo. See figure 3-18 for details of these fittings.

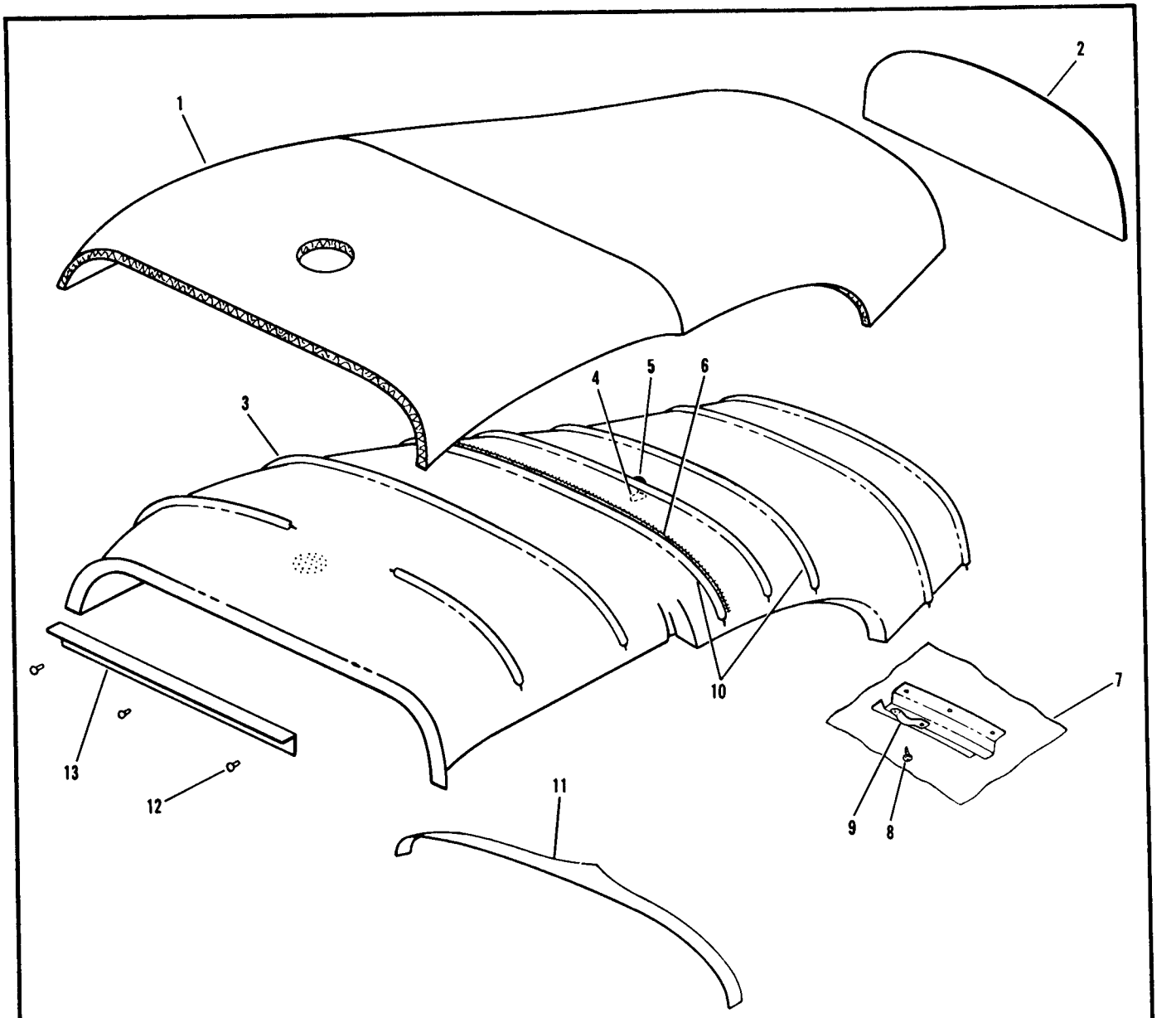

1. Soundproof Panel
2. Rear Soundproof Panel
3. Headliner
4. Coat Hanger Hook
5. Washer
6. Zipper
7. Cabin Top Skin
8. Screw
9. Headliner Hanger
10. Wire Bows
11. Tiara
12. Fastener
13. Front Spar Trim Shield

TYPICAL EXCEPT MODEL 150

Figure 3-14. Headliner and Headliner Soundproofing

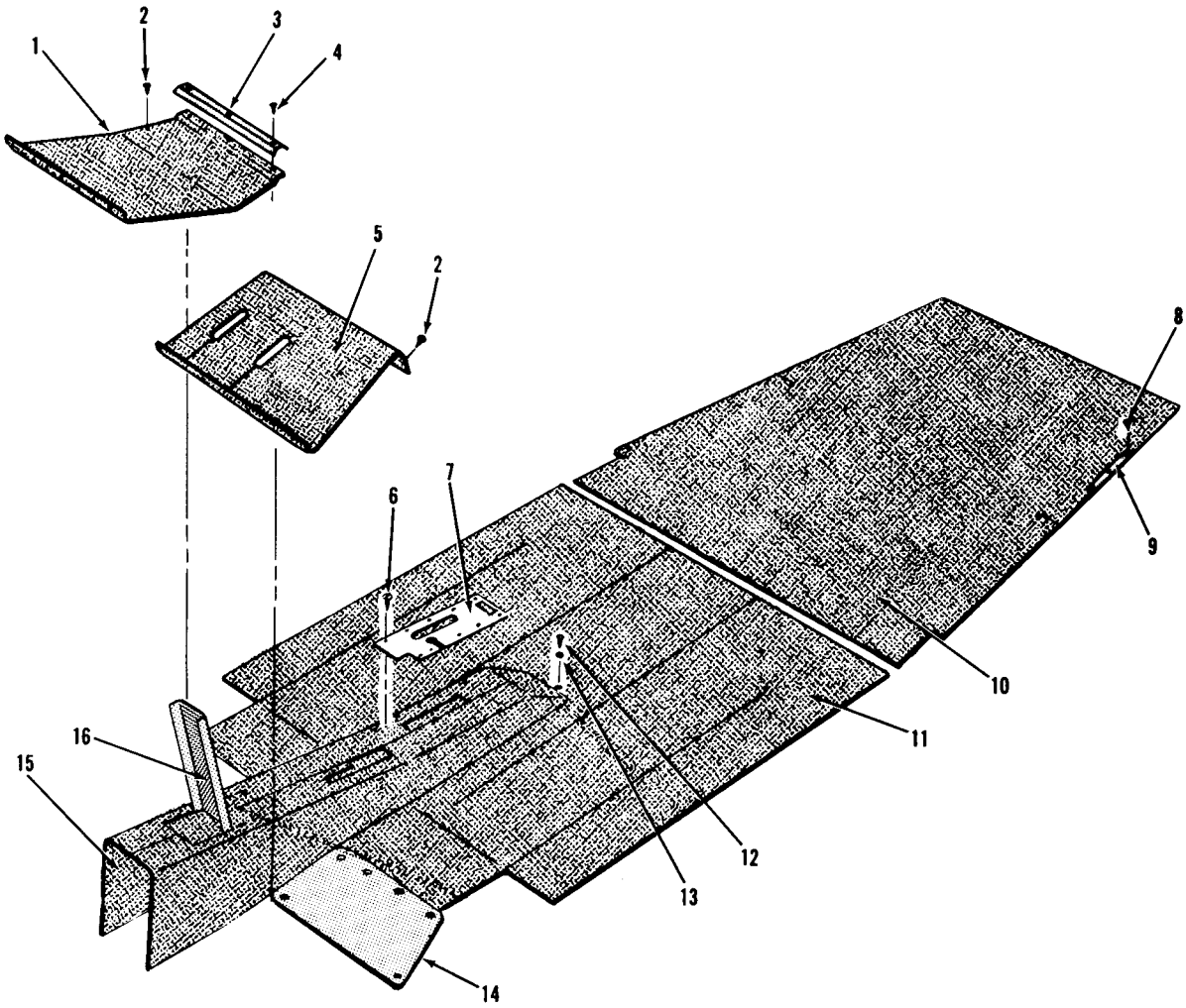

NOTE

Carpeting in deluxe versions of the Model 185 is similar to that used in the Model 180, while utility versions use rubber matting instead of carpeting. The aft floor covering of utility aircraft is secured with metal cargo runners. Beginning in 1962, the floorboard tunnel on the Model 182 has been replaced with an upright console containing trim wheels, fuel selector valve and cowl flap control.

1. Rudder Bar Shield
2. Screw
3. Retainer
4. Screw
5. Rudder Bar Shield
6. Screw
7. Tunnel Cover Plate
8. Screw
9. Scuff Plate
10. Baggage Carpet
11. Floor Mat
12. Screw
13. Washer
14. Kick Plate
15. Tunnel Carpet
16. Control Tee Shield

TYPICAL EXCEPT MODEL 150

Figure 3-15. Cabin Carpeting

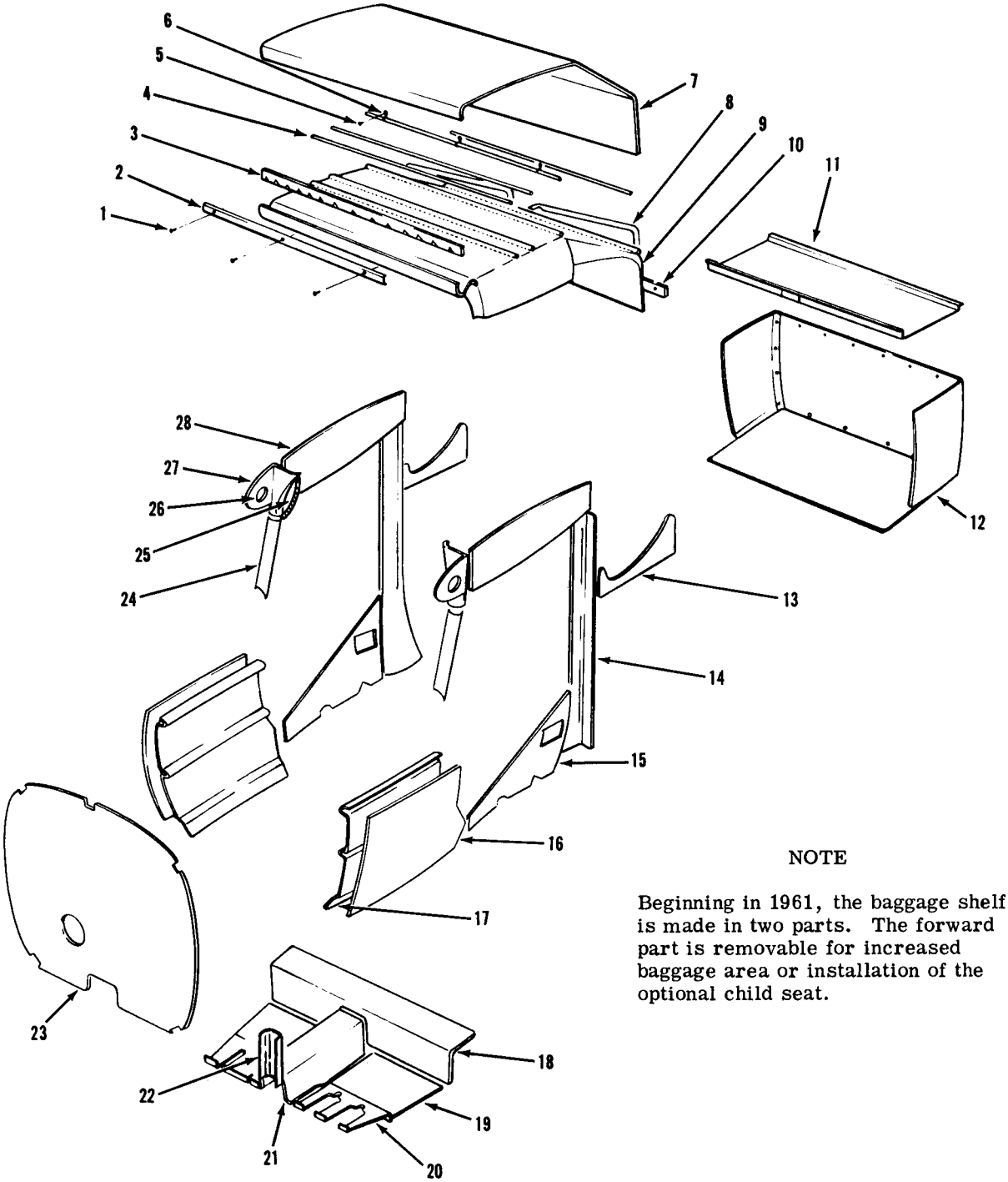

NOTE

Beginning in 1961, the baggage shelf is made in two parts. The forward part is removable for increased baggage area or installation of the optional child seat.

1. Fastener
2. Cover Strip
3. Headliner Strip
4. Headliner Wire
5. Screw
6. Clip
7. Soundproofing
8. Channel
9. Headliner
10. Support
11. Baggage Shelf
12. Baggage Compartment Upholstery
13. Window Trim Panel
14. Rear Doorpost Panel
15. Side Panel
16. Soundproofing
17. Forward Side Panel
18. Carpet
19. Kickplate
20. Rudder Bar Shield
21. Tunnel Carpet
22. Control Tee Shield
23. Firewall Panel
24. Doorpost Trim
25. Assist Strap
26. Ventilation Grommet
27. Shield Assembly
28. Soundproofing

Figure 3-16. Model 150 Upholstery

3-38. CARGO TIE-DOWN PROVISIONS. Optional cargo tie-down rings may be installed in all aircraft except the Model 150. Excluding the Model 185, which has a different tie-down ring arrangement, provisions for the rings consists of six nutplates into which eyebolt-type tie-down rings may be installed. One is installed in the floorboard on each side of the cabin near the rear doorpost. One is installed in the floorboard on each side of the baggage compartment just in front of the rear wall. One is installed in the floorboard on each side of the cabin at the bulkhead just in front of the baggage door. Beginning in 1962, the Model 182 utilizes the nutplates in the rear seat support brackets, when the rear seat is removed, instead of the floorboard nutplates in front of the baggage door. Additional rings of a different type may be attached to the aft end of front seat rails. Both types are shown in figure 3-17. In the Model 185, six cargo tie-down rings, similar to the one shown on the seat rail in figure 3-17, are available as optional equipment. Two rings are installed at the front of the copilot's seat rails when the seat is removed; the remaining four are installed on the aft end of the front seat rails. Additional tie-down provisions on the Model 185 are the six stowable-seat safety belt attachment fittings in the rear cabin area (refer to figure 3-18). Removal of the quick-release safety belts permits use of the fittings for cargo tie-down. In the Model 150, cargo tie-down provisions consist of two adjustable tie-down straps secured to the center of the floorboard just aft of the seats, running aft and outboard to bulkhead attachments at the baggage compartment rear wall (refer to figure 3-19). Whenever the Model 150 is equipped with optional reclining seats, installation of the tie-downs is mandatory.

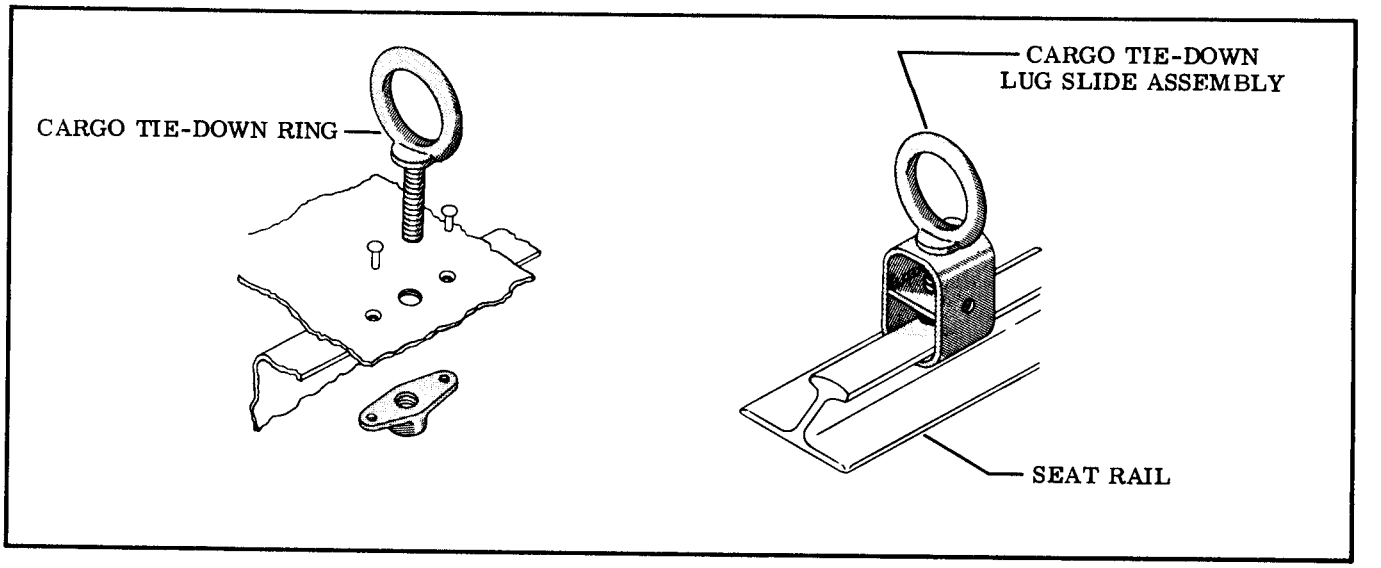

Figure 3-17. Cargo Tie-Down Rings

SHOP NOTES:

BE SURE CENTER SEAT BELT BRACKET IS IN LOCATION SHOWN. THE FLOOR-BOARD IS REINFORCED AT THE AFT HOLE FOR STRUCTURAL REQUIREMENTS OF THE SEAT BELT AND CARGO TIE-DOWN ATTACH-MENTS.

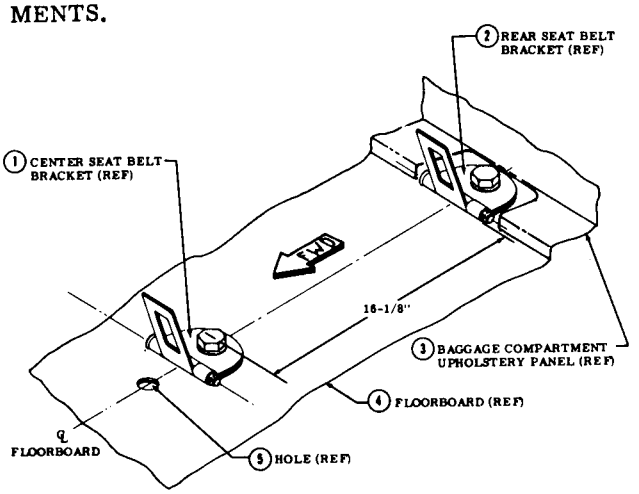

NOTE

Model 185 stowable-seat safety belts can be removed quickly by unsnapping them from their brackets. These same brackets then serve as cargo tie-down brackets.

1. Safety Belt
2. Bolt
3. Bracket
4. Bulkhead (Station 108)
5. Nut
6. Floorboard
7. Nutplate
8. Bulkhead (Station 90)
9. Anchor Plate

Figure 3-18. Safety Belt and Cargo Tie-Down Provisions (Utility Model 185)

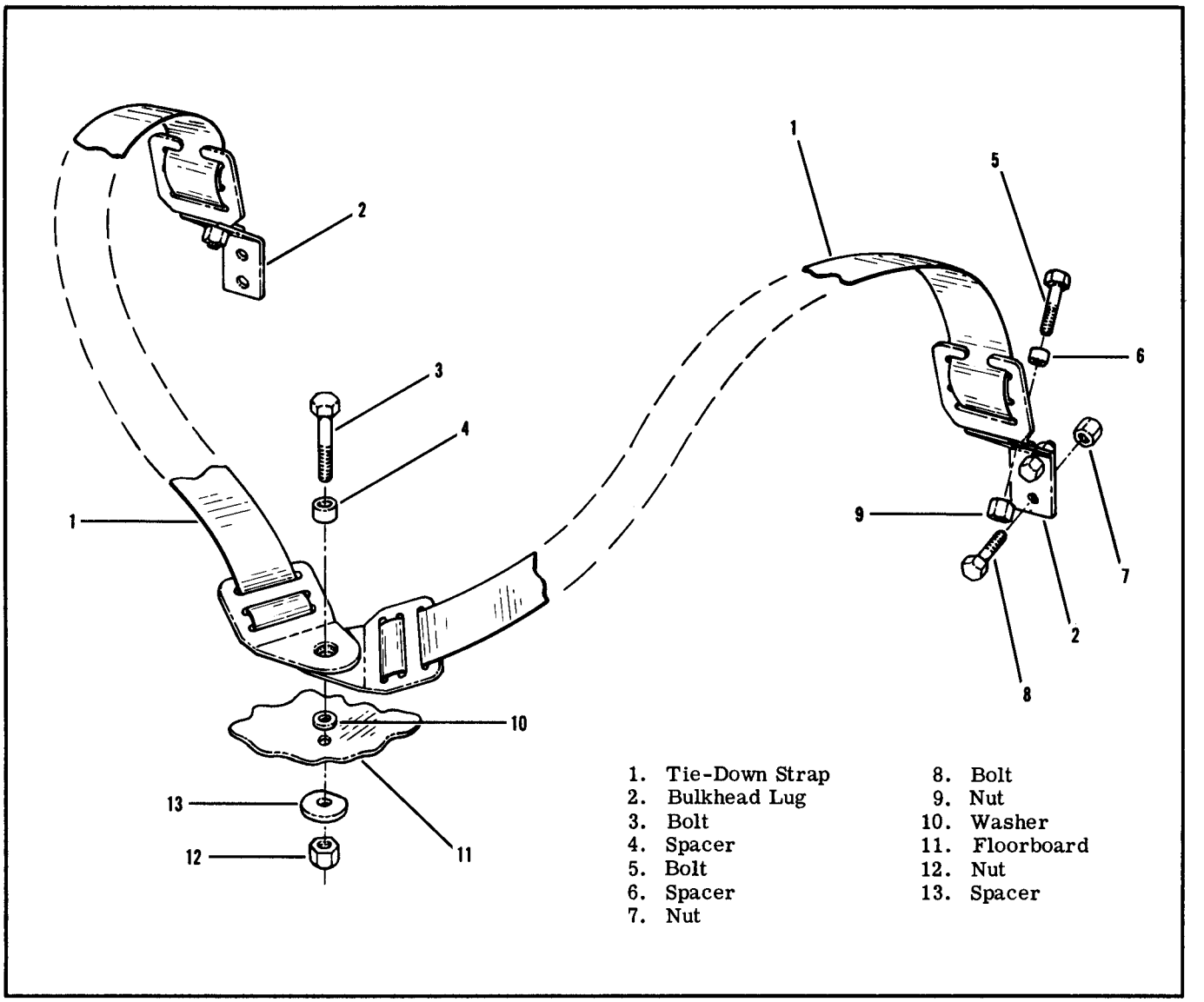

Figure 3-19. Model 150 Adjustable Cargo Tie-Down Straps

SECTION 4

AIRFRAME

TABLE OF CONTENTS

	Page
WINGS	4-1
Removal	4-1
Repair	4-1
Replacement	4-3
Adjustment	4-3
WING STRUTS	4-5
Removal and Replacement	4-5
Repair	4-5
FIN	4-7
Removal	4-7
Repair	4-7
Replacement	4-7
HORIZONTAL STABILIZER	4-12
Removal	4-13
Replacement	4-13

4-1. WINGS. (See figure 4-1.)

4-2. Each all-metal wing panel is a semicantilever, semi-monocoque type, with two main spars and suitable ribs for the attachment of the skin. Skin panels are riveted to ribs, spars, and stringers to complete the structure. An all-metal, piano-hinged aileron, a high-lift flap, and a detachable wing tip are mounted on each wing assembly. A single fuel tank is mounted between the wing spars at the inboard end of each wing and the leading edge of the left wing may have optional landing and taxi lights installed. Colored wing tip lights are mounted at each wing tip.

4-3. REMOVAL. Removal of a wing panel is accomplished most easily if three men are available to handle the wing. Otherwise the wing should be supported with a sling or maintenance stand when the fastenings are loosened. To remove a wing:

a. Remove the wing root fairings and fairing plates.

b. Remove all wing inspection plates.

c. Drain fuel from tank of wing being removed.

d. Disconnect:

1. Electrical wires at wing-root disconnects.
2. Fuel lines at wing root.
3. Pitot line (left wing only) at wing root.
4. Cabin ventilator hose at wing root.

e. Slack off tension on flap and aileron cables by loosening turnbuckles, then disconnect cables at the flap and aileron bellcranks.

NOTE

To ease rerouting the cables, a guide wire may be attached to each cable before it is pulled free of the wing. Then disconnect cable from wire and leave the guide-wire routed through the wing; it may be attached again to the cable during reinstallation and used to pull the cable into place.

f. Support wing at outboard end and disconnect strut at wing fitting. Tie the strut up with wire to prevent it from swinging down and straining strut-to-fuselage fittings. On the Model 182, 1962 and on, the fuselage fitting projects from the fuselage and is covered by the strut fairing. Loosen the fairing and slide it up the strut; the strut may then be lowered without damage.

g. Mark position of wing attachment eccentric bushings; these bushings are used to rig out "wing-heaviness."

h. Remove nuts, washers, bushings and bolts attaching wing spars to fuselage.

NOTE

It may be necessary to use a long drift punch to drive out wing-attaching bolts, or to rock the wing slightly while pulling bolts.

j. Remove wing and lay on padded stand.

4-4. REPAIR of a damaged wing panel may be accomplished in accordance with instructions given in Section 19. Extensive repairs of wing skin or structure are best accomplished using the wing repair jig, which may be obtained from the manufacturer. The jig serves not only as a holding fixture, making work

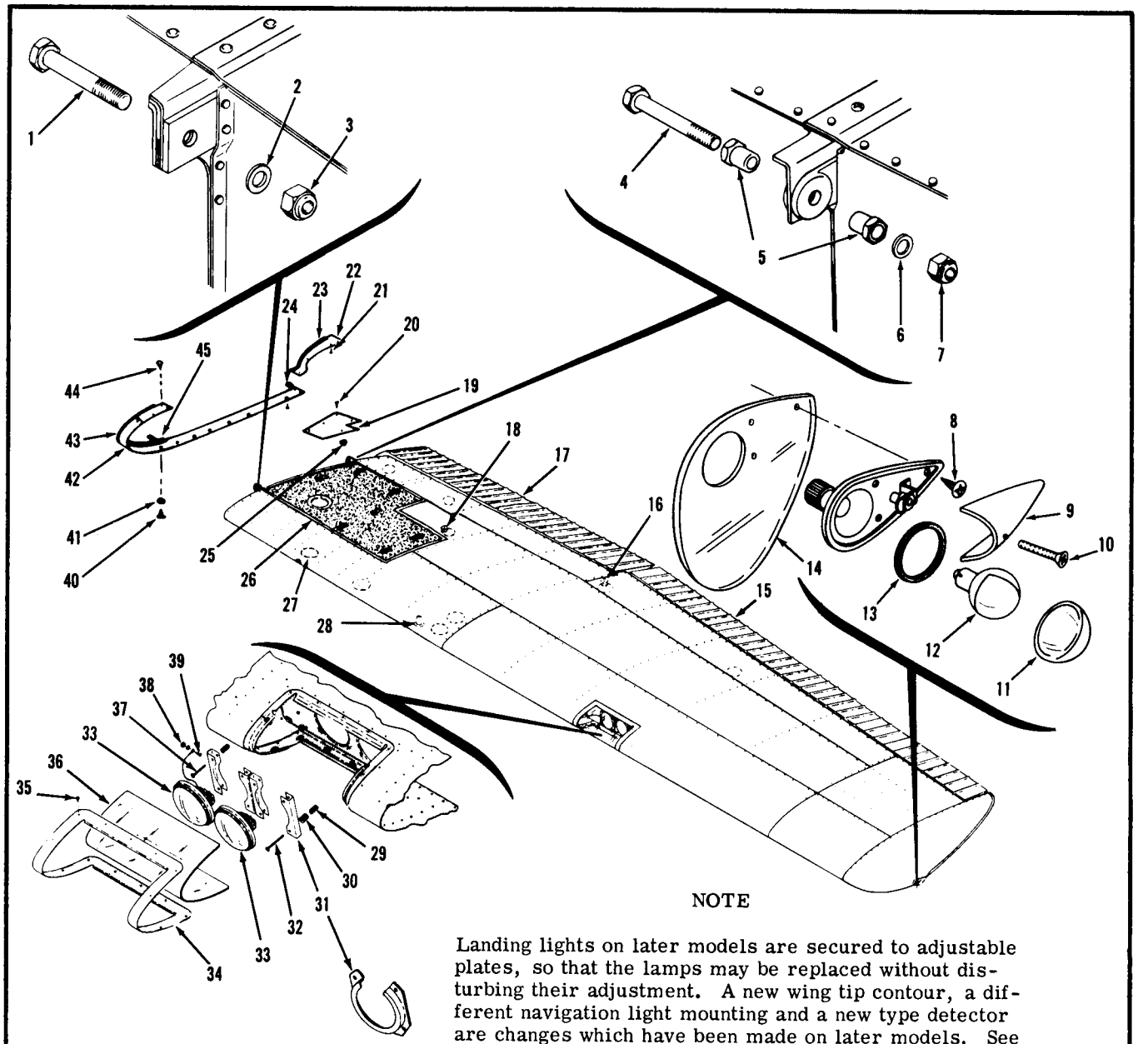

NOTE

Landing lights on later models are secured to adjustable plates, so that the lamps may be replaced without disturbing their adjustment. A new wing tip contour, a different navigation light mounting and a new type detector are changes which have been made on later models. See Section 17 for landing light adjustment.

1. Bolt
2. Washer
3. Nut
4. Bolt
5. Wing Adjustment Bushing
6. Washer
7. Nut
8. Screw
9. Fairing
10. Screw
11. Lens
12. Gasket
13. Gasket
14. Detector
15. Aileron
16. Aileron Control Pulley
17. Flap
18. Flap Pulley
19. Plate
20. Screw
21. Screw
22. Fairing Assembly
23. Rubber Channel Moulding
24. Nut
25. Dome Nut
26. Fuel Tank
27. Inspection Plate
28. Stall Warning Wing Unit
29. Spring
30. Washer
31. Channel or Bracket
32. Screw
33. Landing Light
34. Wing Retainer
35. Screw
36. Landing Light Window
37. Screw
38. Grounding Nut
39. Grounding Screw
40. Screw
41. Washer
42. Fairing Assembly
43. Rub Strip
44. Screw
45. Rub Strip

Figure 4-1. Typical Wing Installation

on the wing easier, but also assures absolute alignment of the repaired wing.

4-5. REPLACEMENT.

a. Hold wing in position and install bolts, bushings, washers and nuts attaching wing spars to fuselage fittings.

CAUTION

Beginning with the 1962 Model 182D, forward bushing (5) is approximately half the length of the aft bushing. Care should be taken to install the short bushing in the forward side and the long bushing in the aft side. At least one washer should always be installed under the bolt head and under the nut. Torque to the value listed in the Torque Table in Section 1.

b. Install bolt, spacer, and nut to secure upper end of wing strut to wing fittings. On the Model 182, 1962 and on, reinstall the strut fairing at the lower end of the strut.

c. Route flap and aileron cables.

d. Connect:
   1. Electrical wires at wing-root quick-disconnects.
   2. Fuel lines at wing root.
   3. Pitot line (if left wing is being installed).
   4. Ventilator hose.

e. Rig aileron system (Section 6).

f. Rig flap system (Section 7).

g. Refuel wing tank and check for leaks.

h. Check operation of wing tip and landing lights.

j. Check operation of fuel gage.

k. Install the wing root fairings and fairing plates.

NOTE

Be sure to insert soundproofing panel in wing gap, if such a panel was installed originally, before replacing fairings.

l. Install all inspection plates and interior panels and upholstery.

4-6. ADJUSTMENT (CORRECTING "WING-HEAVY" CONDITION). If considerable control wheel pressure is required to keep the wings level in normal flight, a wing-heavy condition exists. To correct wing heaviness:

a. Remove wing fairing strip on the wing-heavy side of the airplane.

b. Loosen nut and rotate bushings (5) simultaneously until the bushings are positioned with the thick side of the eccentrics up. This will lower the trailing edge of the wing, and decrease wing heaviness by increasing the angle-of-attack of the wing.

CAUTION

Be sure to rotate the eccentric bushings simultaneously. Rotating them separately will destroy the alignment between the off-center bolt holes in the bushings, thus exerting a shearing force on the bolt, with possible damage to the hole in the wing spar.

c. Tighten nut and reinstall fairing strip.

d. Test-fly the airplane. If the wing-heavy condition still exists, remove fairing strip on the "lighter" wing, loosen nut and rotate bushings simultaneously until the bushings are positioned with the thick side of the eccentric down. This will raise the trailing edge of the wing, thus increasing wing heaviness to balance heaviness in the opposite wing.

e. Tighten nut, install fairing strip, and repeat test flight.

SHOP NOTES:

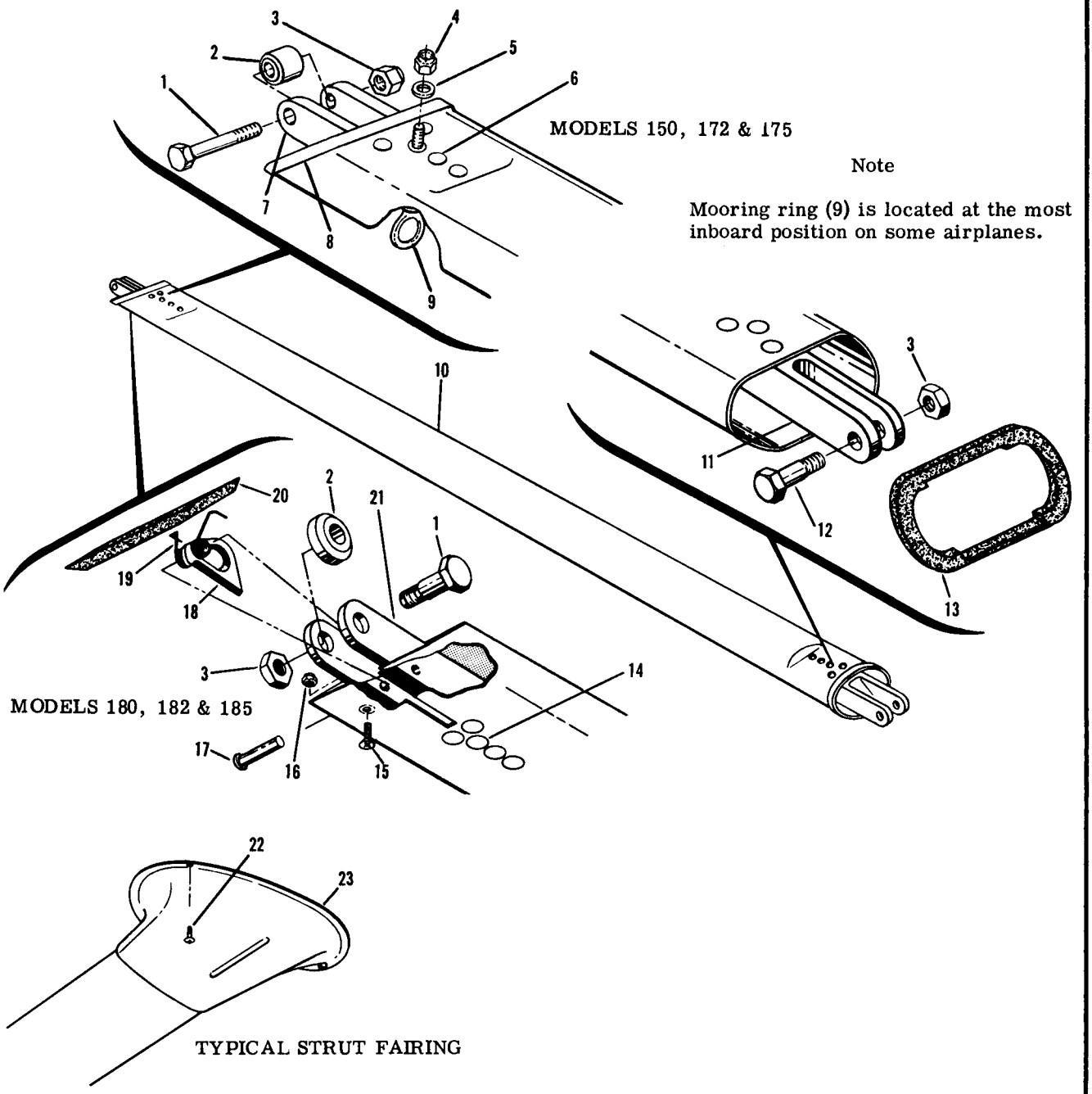

1. Bolt
2. Spacer
3. Nut
4. Nut
5. Washer
6. Rivet
7. Wing Attachment Fitting
8. Upper Seal
9. Mooring Ring
10. Strut Assembly
11. Fuselage Attachment Fitting
12. Bolt
13. Seal
14. Rivet
15. Screw
16. Nut
17. Pin
18. Mooring Ring
19. Spring
20. Seal
21. Wing Attachment Fitting
22. Screw
23. Strut Fairing

Figure 4-2. Wing Strut

4-7. WING STRUTS. (See figure 4-2.)

4-8. Each wing has a single lift strut which transmits a part of the wing load to the lower portion of the fuselage. The strut consists of a streamlined tube riveted to two end fittings for attachment at the fuselage and wing.

4-9. REMOVAL AND REPLACEMENT of wing struts can be accomplished in accordance with the following steps:

NOTE

If strut fairings are installed, remove screws attaching them to wing and fuselage.

a. Remove fuselage and wing inspection plates or fairings at strut junction points.
b. Support wing securely, then remove nut and bolt securing strut to fuselage.
c. Remove nut, bolt, and spacer used to attach strut to wing; then remove strut from airplane.
d. Install strut by reversing steps listed above.

4-10. REPAIR of wing strut is limited to replacement of strut seals and attaching parts. A badly dented, cracked, or deformed wing strut should be replaced.

SHOP NOTES:

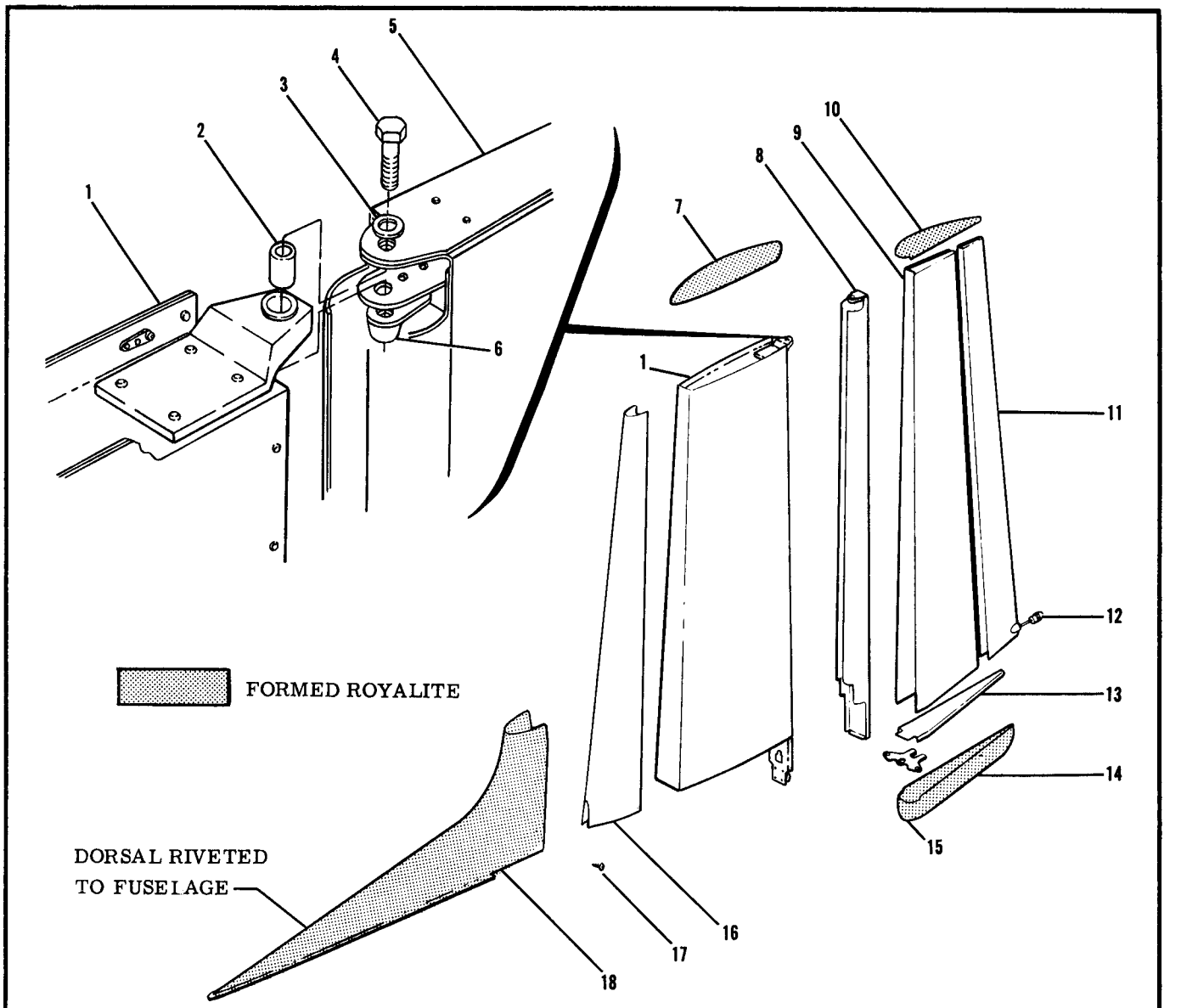

1. Fin Assembly
2. Oilite Hinge Bushing
3. Washer
4. Bolt
5. Rudder
6. Nutplate
7. Fin Tip
8. Rudder Spar
9. Skin
10. Rudder Tip
11. Rudder Trailing Edge
12. Tail Navigation Light
13. Lower Rib
14. Rudder Butt
15. Rudder Bellcrank
16. Fin Leading Edge
17. Screw
18. Dorsal

Figure 4-3. Fin and Rudder - 150 Series

4-11. FIN.

4-12. The fin is primarily of metal construction consisting of ribs and spars covered with skin. Some fin tips, dorsals, and sections of leading edges are Royalite or Fiberglas. Hinge brackets at the fin rear spar attach the rudder.

4-13. REMOVAL. (See figures 4-3 thru 4-7.) The fin on all models except the 150 may be removed without first removing the rudder. However, for access and ease of handling, the rudder may be removed if desired.

a. Remove fairings on each side of the fin. Remove the stinger on Models 180, 182, and 185.

b. Disconnect tail light electrical wire, rotating beacon electrical wires, and antenna leads if installed. Unfasten any antennas that would interfere with fin removal.

c. If attached to rudder bellcrank, disconnect tailwheel steering mechanism at the bellcrank.

NOTE

Tension can be relieved by holding tailwheel and applying pressure on one rudder pedal.

d. Disconnect rudder cables at rudder bellcrank.

e. Remove rudder hinge bolts and remove rudder on the Model 150 - and other models, if desired.

f. Remove any screws attaching dorsal to fuselage and dorsal to fin.

NOTE

The dorsal is a part of the fin on some models and a part of the fuselage on others. On those airplanes where the dorsal is riveted to the fuselage, it is ordinarily left in place when removing the fin.

g. Remove bolts attaching fin rear spar to fuselage. Remove upper elevator stop bolt on those models where it passes through the fin rear spar.

h. On the Model 150, remove the lower rudder hinge.

i. Remove the bolts attaching the fin front spar to the fuselage and remove the fin. On the Model 150, the forward part of the fin is attached to the fuselage with a bolt passing up through the fuselage into a nutplate in the fin base. Remove this bolt and remove the fin.

4-14. REPAIR of the fin should be accomplished in accordance with the applicable instructions in Section 19.

4-15. REPLACEMENT of the fin may be accomplished by reversing the procedure in paragraph 4-13. Be sure to check and reset rudder and elevator travel if any stop bolts were removed or settings disturbed.

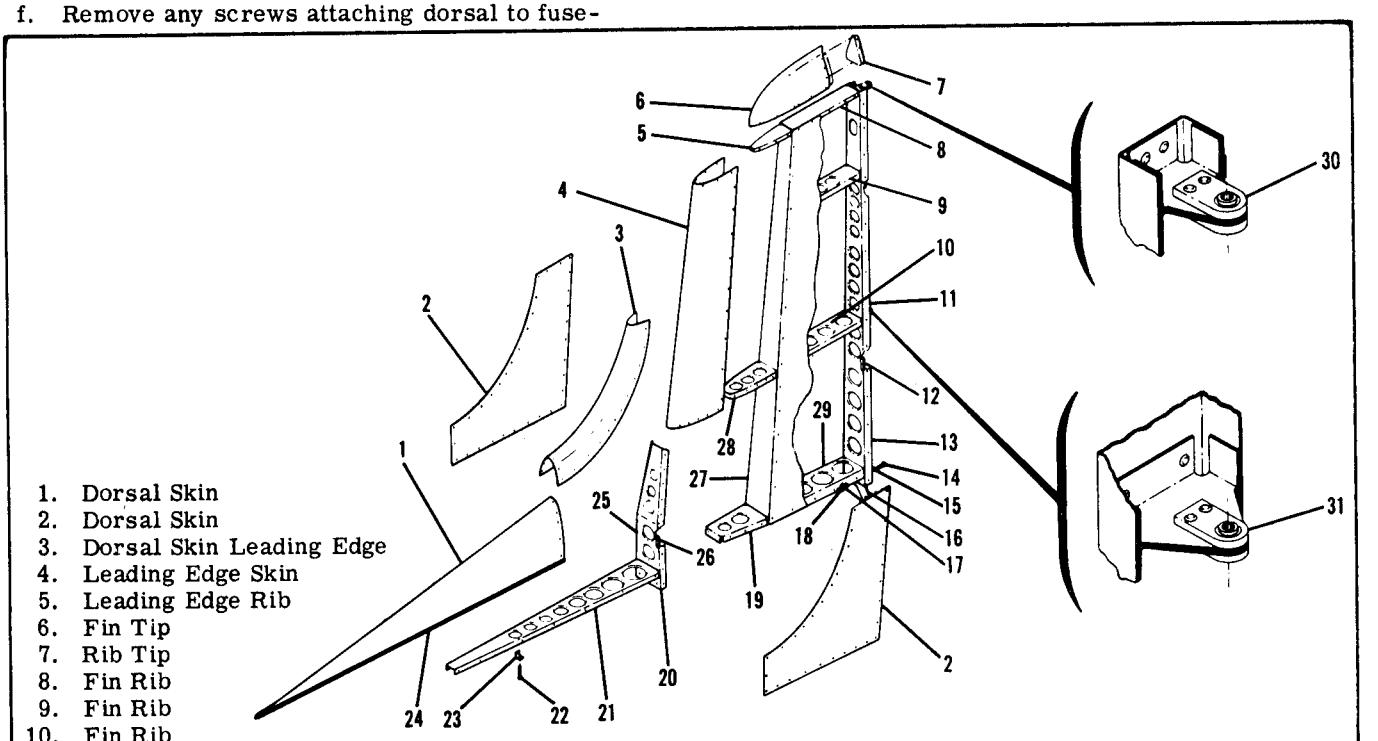

Figure 4-4. Fin - 172 and 175 Series (Prior to 1960)

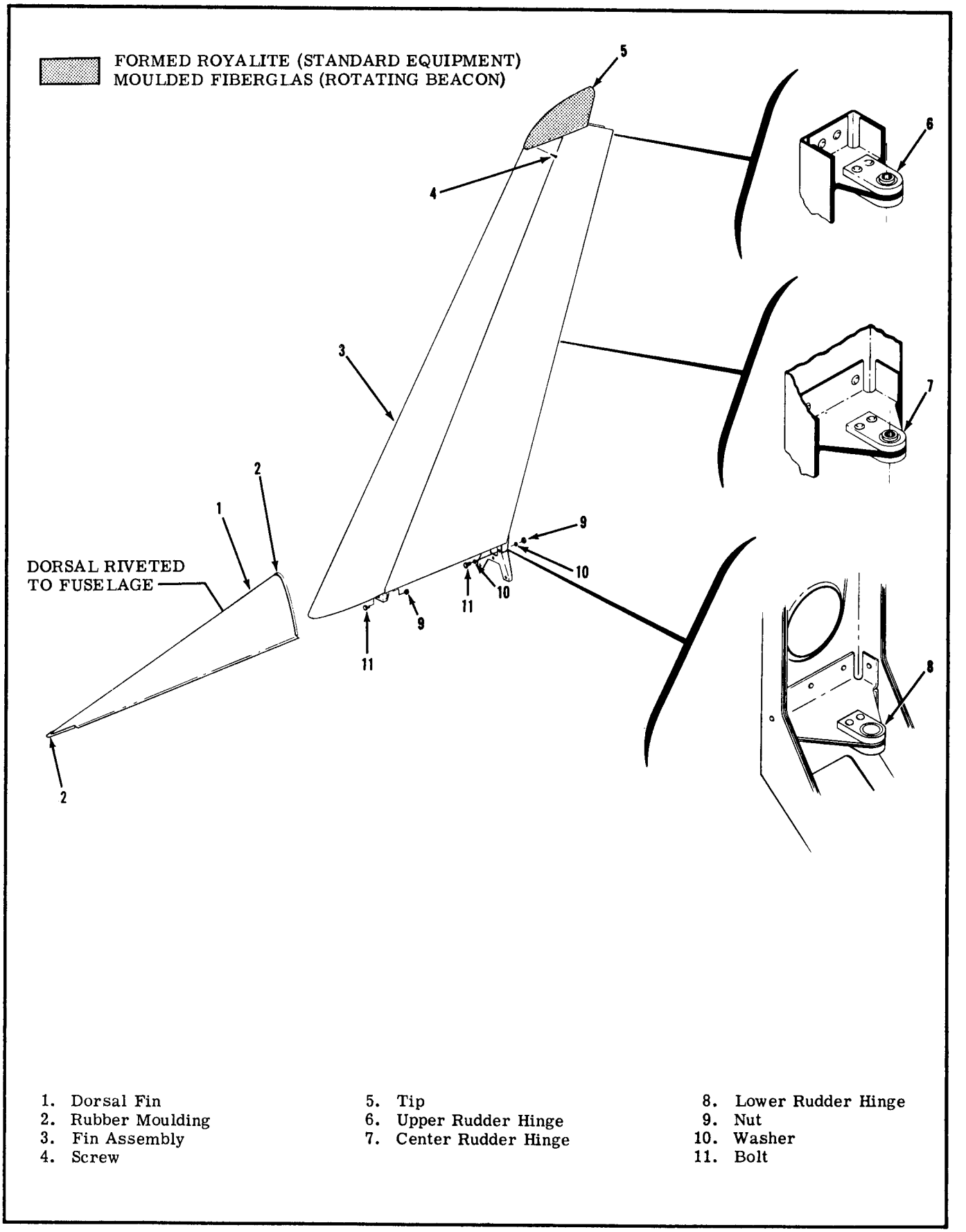

1. Dorsal Fin
2. Rubber Moulding
3. Fin Assembly
4. Screw
5. Tip
6. Upper Rudder Hinge
7. Center Rudder Hinge
8. Lower Rudder Hinge
9. Nut
10. Washer
11. Bolt

Figure 4-5. Fin - 172 and 175 (1960 & on)

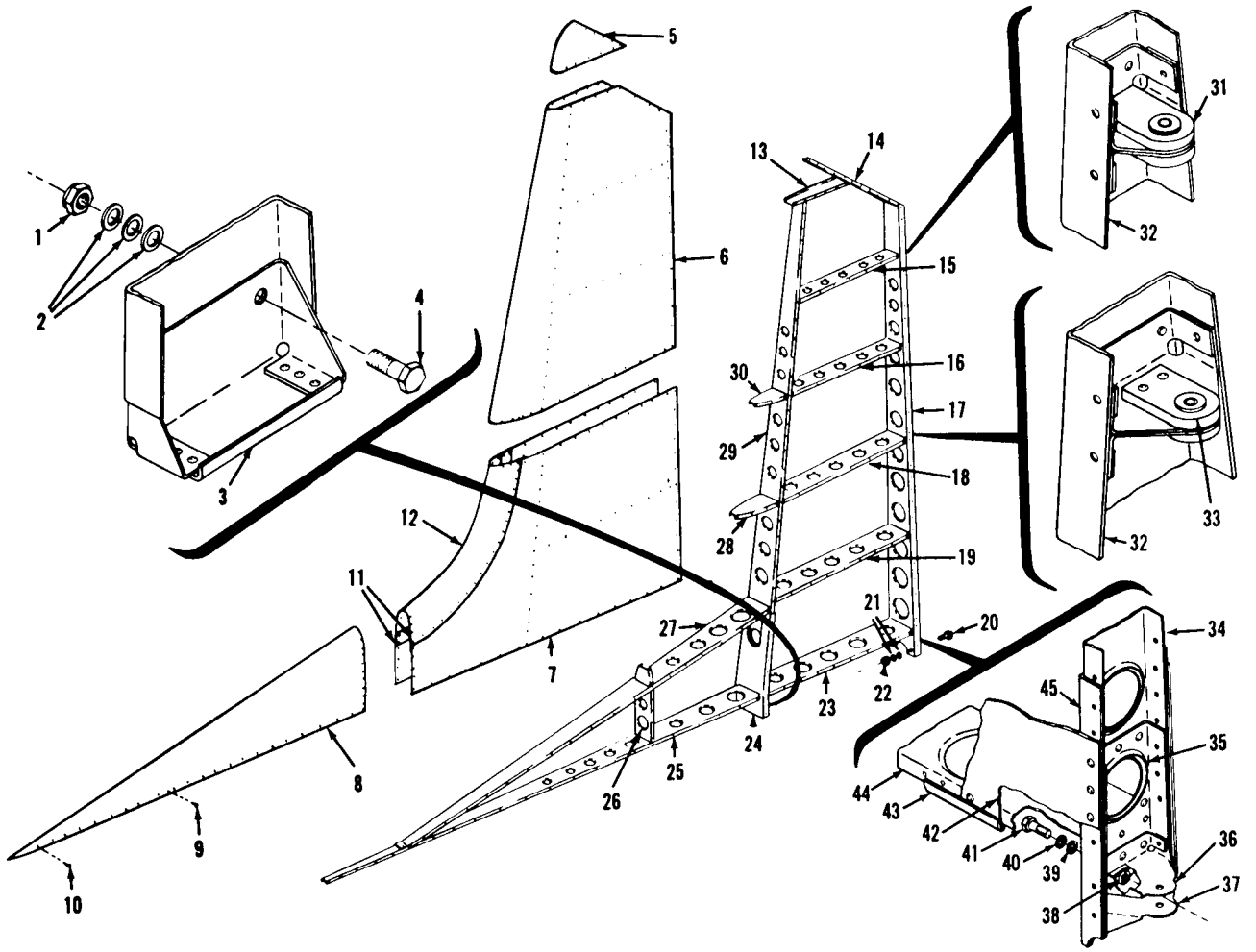

1. Nut
2. Washer
3. Stabilizer Stop
4. Bolt
5. Tip Assembly
6. Fin Upper Skin
7. Fin Lower Skin
8. Dorsal Skin
9. Screw
10. Screw
11. Splice Plate
12. Leading Edge Skin
13. Rib
14. Fin Tip Rib
15. Fin Rib
16. Fin Rib
17. Fin Rear Spar
18. Fin Rib
19. Fin Rib
20. Bolt
21. Washer
22. Nut
23. Fin Rib
24. Channel
25. Dorsal Lower Rib
26. Dorsal Rib
27. Dorsal Upper Rib
28. Fin Leading Edge Rib
29. Fin Front Spar
30. Fin Leading Edge Rib
31. Hinge Assembly
32. Fin Rear Spar
33. Center Hinge Assembly
34. Fin Rear Spar Reinforcement
35. Plate
36. Hinge Upper Bracket
37. Hinge Lower Bracket
38. Nutplate
39. Washer
40. Washer
41. Bolt
42. Fin Lower Skin
43. Moulding
44. Dorsal Lower Rib

Figure 4-6. Fin - 180 (All) and 182 (Prior to 1960)

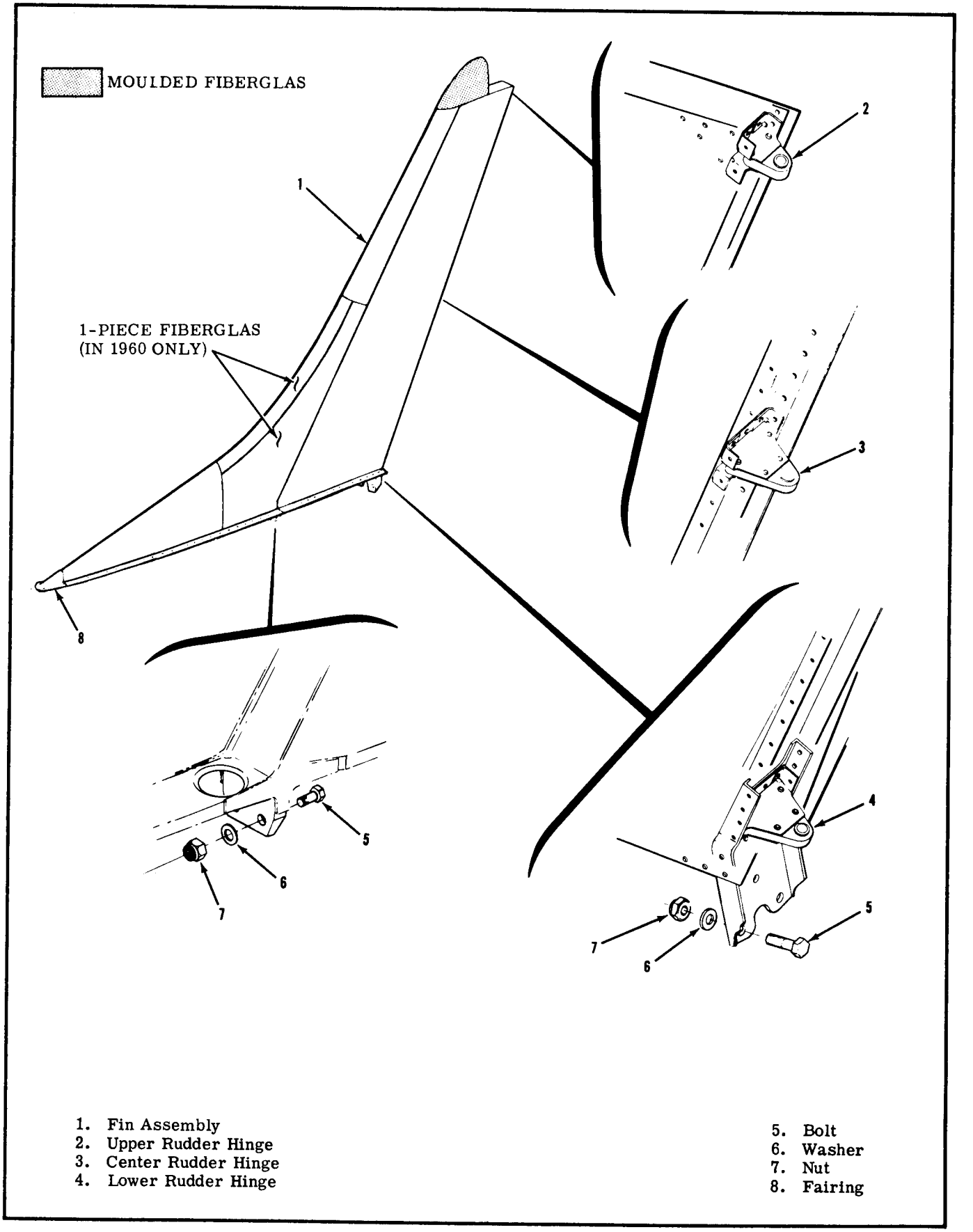

1. Fin Assembly
2. Upper Rudder Hinge
3. Center Rudder Hinge
4. Lower Rudder Hinge
5. Bolt
6. Washer
7. Nut
8. Fairing

Figure 4-7. Fin - 182 (1960 & on)

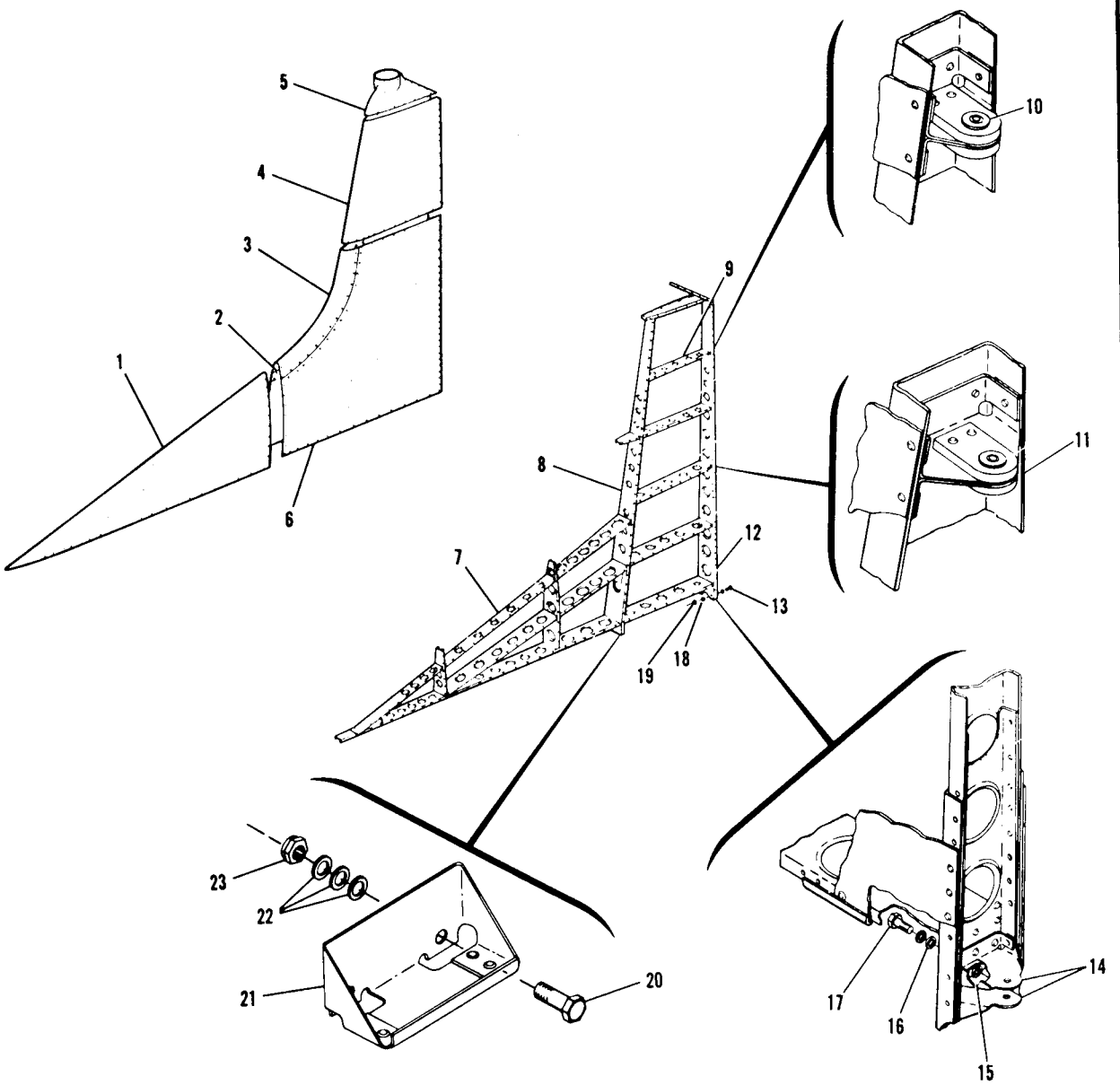

1. Dorsal Skin
2. Splice Plate
3. Leading Edge Skin
4. Upper Skin
5. Tip Cover
6. Lower Skin
7. Dorsal Ribs
8. Front Spar
9. Fin Ribs
10. Upper Hinge
11. Center Hinge
12. Rear Spar
13. Bolt
14. Lower Hinge
15. Nutplate
16. Washer
17. Bolt
18. Washer
19. Nut
20. Bolt
21. Stop Bracket
22. Washer
23. Nut

Figure 4-8. Fin - Model 185

4-16. HORIZONTAL STABILIZER (FIXED).

NOTE

On Models 182 (prior to 1962), 180, and 185, the horizontal stabilizer is adjustable to provide the longitudinal trim afforded by the elevator trim tab of other models. Refer to Section 11 for information concerning adjustable stabilizers.

4-17. The horizontal stabilizer is primarily an all-metal assembly constructed with a rear spar which extends throughout the full span of the horizontal stabilizer and front spars which extend approximately one-half the span of the stabilizer. The skins are riveted to both spars and ribs. Some stabilizer tips are Royalite or Fiberglas. A formed metal leading edge is riveted to the assembly to complete the structure. The elevator trim tab actuator screw is contained within the horizontal stabilizer assembly, and is supported by a bracket riveted to the main spar. The underside of the stabilizer contains a covered opening which provides access to the actuator. Hinges are located on the rear spar to support the elevators.

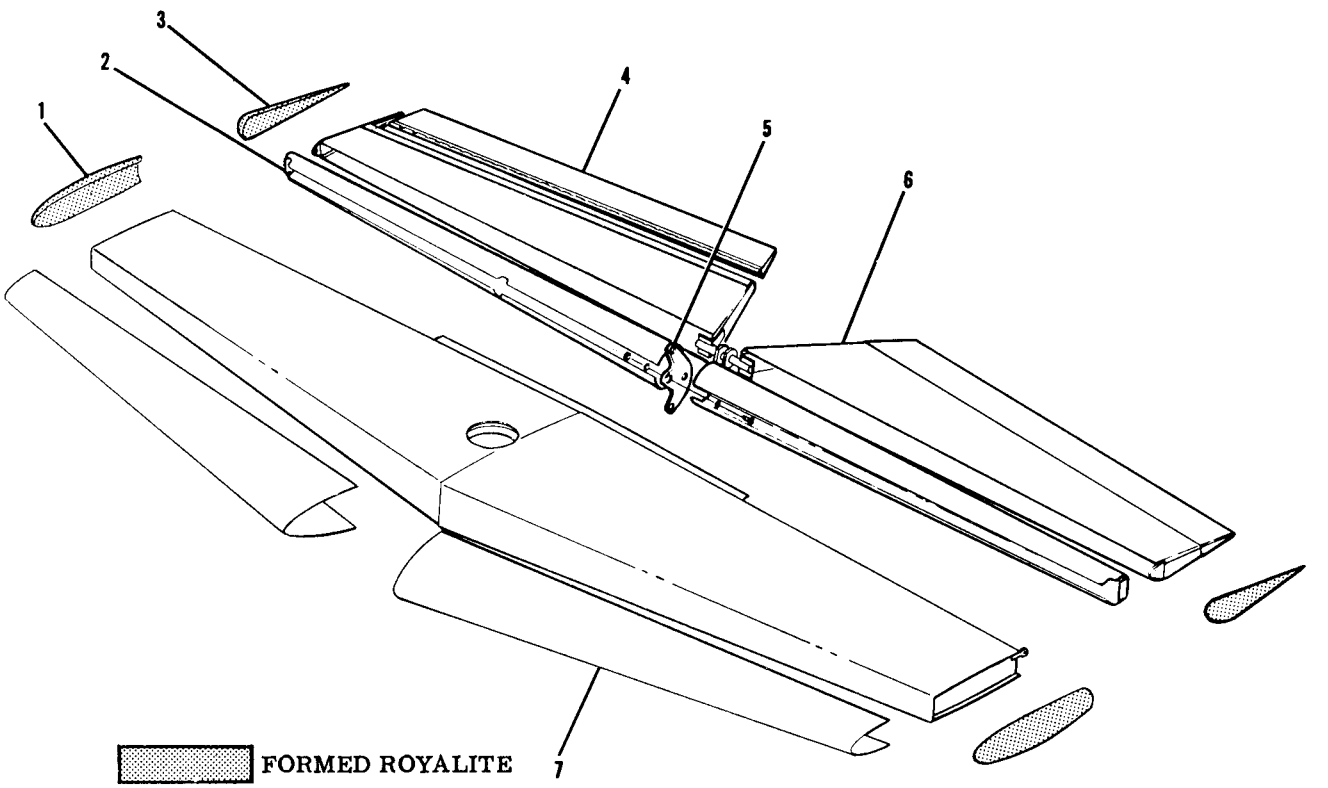

1. Stabilizer Tip
2. Elevator Leading Edge
3. Elevator Tip
4. Elevator Trim Tab
5. Elevator Bellcrank
6. Elevator
7. Stabilizer Leading Edge

Figure 4-9. Stabilizer and Elevator - Model 150

4-18. REMOVAL.

NOTE

Removal of the stabilizer requires removal of the rudder, fin and elevators.

a. Remove the fairings above the horizontal stabilizer and elevator tab actuator access cover.
b. Disconnect rudder cables at rudder bellcrank; then remove rudder by removing rudder hinge bolts.
c. Disconnect the elevator tab push-pull tube at tab horn and actuator and remove push-pull tube.
d. Disconnect elevator cables from elevator bell-crank.
e. Remove the elevator by removing elevator hinge bolts.
f. Remove the fin.
g. Remove the bolts securing the horizontal stabilizer to the fuselage.
h. Disconnect elevator tab actuator cables.
i. Remove the horizontal stabilizer.

4-19. REPLACEMENT.

NOTE

For installation of adjustable stabilizers, see Section 11.

a. Install the horizontal stabilizer by reversing the procedures listed in the preceding paragraph.
b. Check operation of:
   1. Rudder control system.
   2. Elevator control system.
   3. Elevator trim tab control system.
   4. Tail navigation light.
   5. Rotating Beacon.

SHOP NOTES:

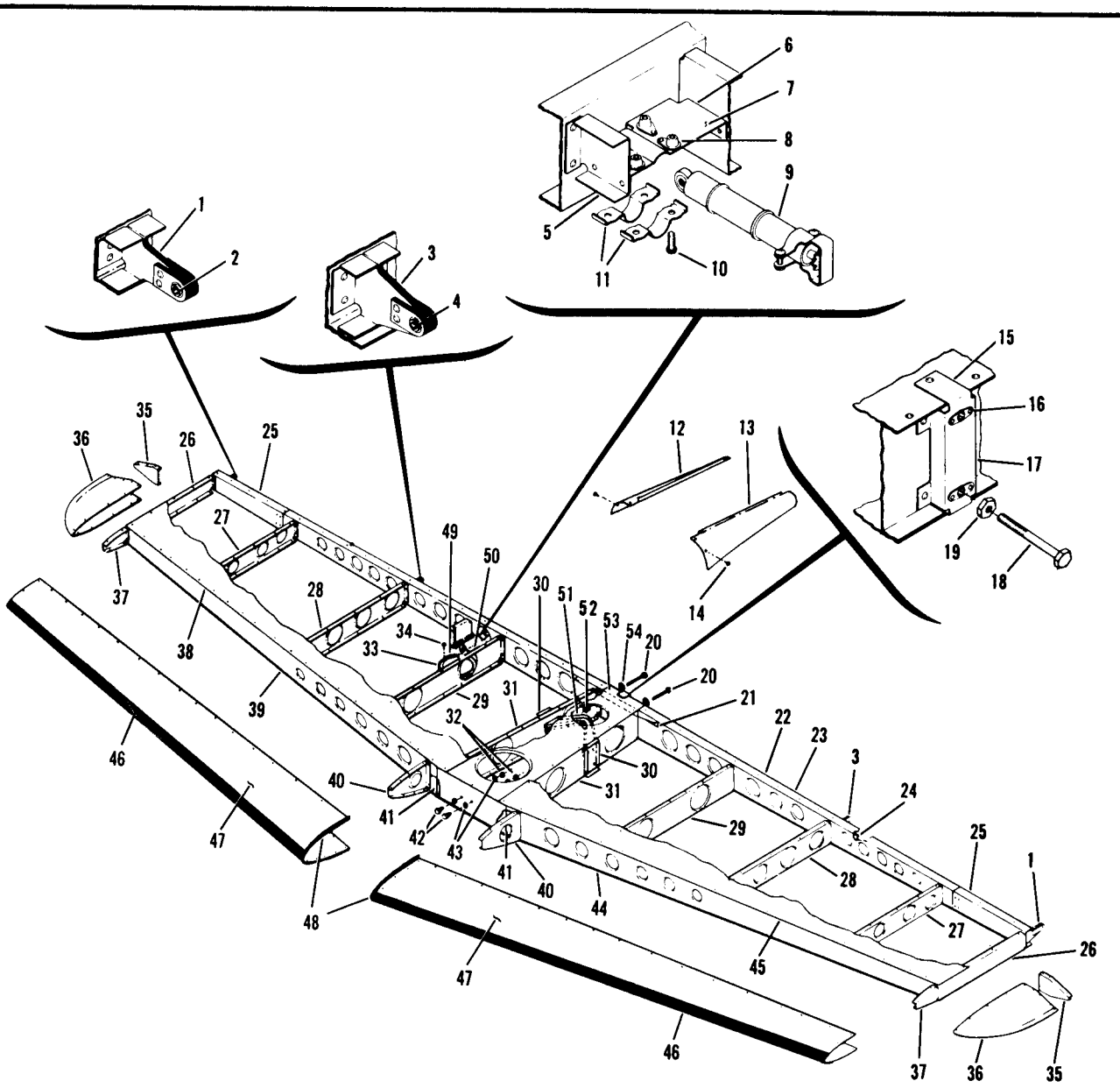

1. Hinge
2. Bushing
3. Hinge
4. Bushing
5. Stub Rib
6. Bracket Assembly
7. Bracket
8. Nut
9. Actuator
10. Screw
11. Clamp
12. Fairing RH
13. Fairing LH
14. Screw
15. Bracket Assembly
16. Nutplate
17. Bracket
18. Stop Bolt
19. Stop Nut
20. Bolt
21. Angle
22. Spar
23. Spar Assembly
24. Reinforcement
25. Spar Rib
26. Rib
27. Rib
28. Rib
29. Rib
30. Stiffener
31. Rib
32. Nut
33. Nut
34. Screw
35. Tip Rib
36. Tip
37. Nose Rib
38. Skin RH
39. Front Spar
40. Nose Rib
41. Reinforcement
42. Bolt
43. Washer
44. Front Spar
45. Skin LH
46. Shoe
47. Skin
48. Moulding
49. Plate Retainer
50. Plate
51. Pulley Bracket
52. Nut
53. Center Skin
54. Washer

Figure 4-10. Horizontal Stabilizer - Models 172 and 175

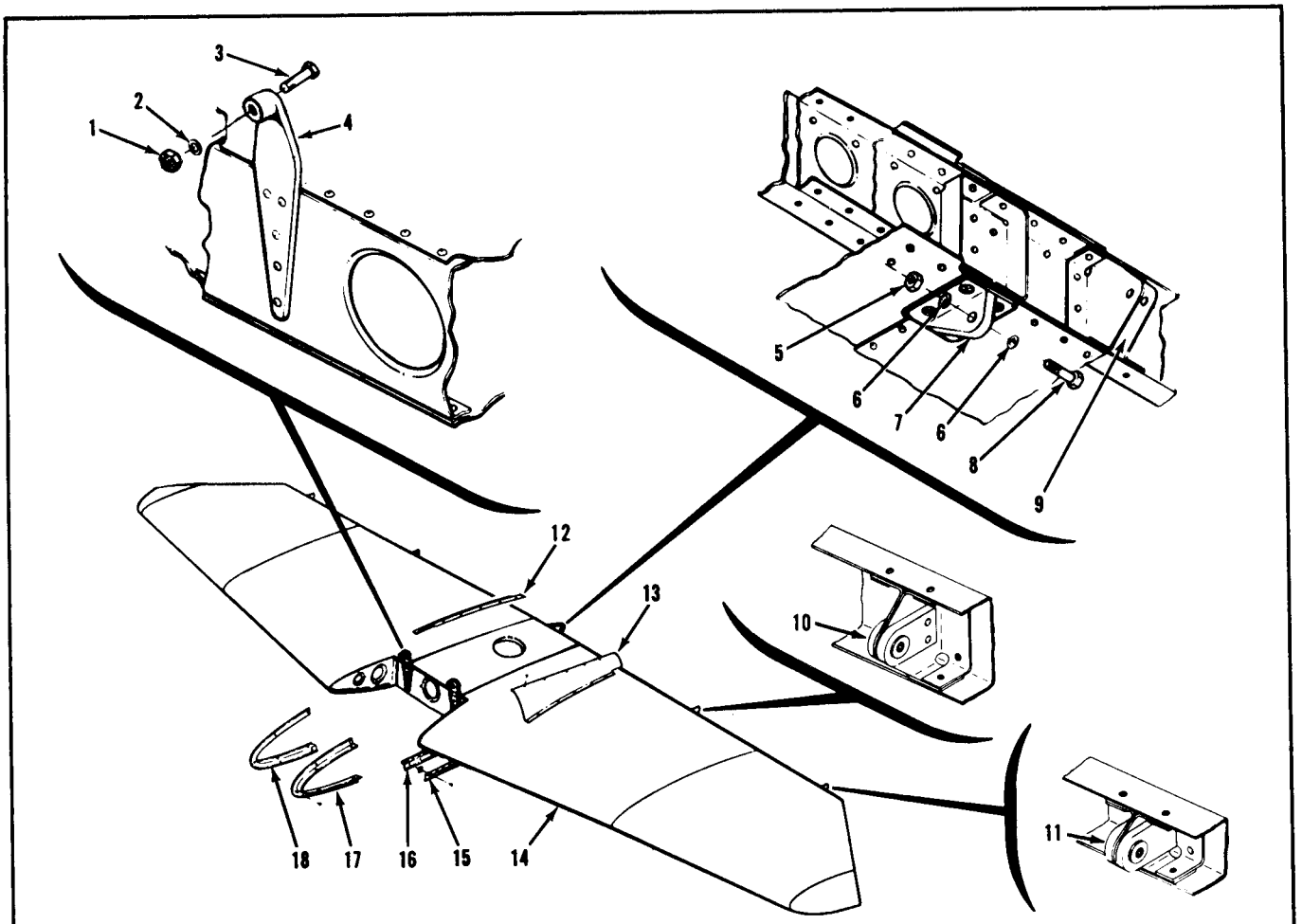

1. Nut
2. Washer
3. Bolt
4. Bracket
5. Nut
6. Washer
7. Bracket
8. Bolt
9. Elevator Pylon Bracket
10. Elevator Inboard Hinge
11. Elevator Outboard Hinge
12. Upper Right Fairing
13. Upper Left Fairing
14. Stabilizer Assembly
15. Lower Left Fairing
16. Lower Right Fairing
17. Forward Left Fairing
18. Forward Right Fairing

Figure 4-11. Horizontal Stabilizer - Model 182 (1962 & on)

SHOP NOTES:

This page intentionally left blank.

SECTION 5

LANDING GEAR

TABLE OF CONTENTS Page

LANDING GEAR 5-1
Trouble Shooting 5-2
MAIN GEAR 5-3
Removal 5-3
Installation 5-4
Step Bracket Replacement 5-4
MAIN WHEEL AND AXLE 5-4
Removal 5-4
Installation 5-4
MAIN WHEELS (Goodyear). 5-5
Removal 5-5
Disassembly 5-5
Inspection and Repair. 5-5
Assembly 5-5
Installation 5-5
MAIN WHEELS (Cleveland) 5-10
Removal 5-10
Disassembly 5-10
Inspection and Repair 5-10
Assembly 5-10
Installation 5-16
MAIN WHEEL ALIGNMENT 5-16
CROSSWIND WHEELS 5-16
NOSE GEAR 5-16
Shimmy Dampener 5-16
Torque Links 5-16
Replacement 5-16
Disassembly 5-22
Assembly 5-22
NOSE WHEEL 5-26
Replacement 5-26
Disassembly 5-26
Inspection and Repair 5-27
Assembly 5-27
Inflating and Balancing 5-28
NOSE WHEEL STEERING SYSTEM 5-29
Steering Tube Assemblies. 5-29
Adjustment 5-29
TAIL GEAR 5-30B
Replacement 5-30B
MODEL 185 ANTI-SWIVEL MECHANISM. 5-30B
Replacement and Rigging 5-30B
TAILWHEEL. 5-30B
Replacement 5-30B
Tire Replacement 5-30B
Cleaning and Lubrication 5-30B
SPEED FAIRINGS 5-31
Replacement. 5-31
Repair 5-33
Precautions 5-33
BRAKE SYSTEMS. 5-33
Brake Master Cylinders 5-33
Hydraulic Brake Lines 5-33
Wheel Brake Assemblies 5-33
Trouble Shooting 5-34
Replacement of Brake Lines. 5-34
Replacement of Master Cylinders 5-34
Repair of Master Cylinders 5-36
Removal of Wheel Brakes 5-36
Disassembly of Wheel Brakes 5-36
Inspection and Repair of Wheel Brakes . . . 5-36
Assembly of Wheel Brakes 5-36
Installation of Wheel Brakes 5-36
Checking Brake Linings. 5-36
Brake Lining Replacement 5-36
Brake Bleeding 5-39
PARKING BRAKE SYSTEMS 5-39
Replacement 5-39

5-1. LANDING GEAR.

5-2. A tapered, spring-steel leaf supports each main wheel and a steerable nose wheel is mounted on an air-oil shock strut in all tricycle-gear equipped aircraft. The Models 180 and 185 are equipped with conventional gear utilizing the spring-leaf main gear and a tapered, tubular shock strut affixed to the steerable, full-swivel tailwheel.

Goodyear magnesium alloy wheels and tube-type tires were used on early Cessna single-engine aircraft. During 1959, the wheels were changed to aluminum alloy and tubeless tires. At this time, the method of transmitting braking force from the brake disc to the wheel was changed to a gear-tooth arrangement instead of the disc drive keys used previously. Early Model 150 aircraft used the aluminum wheels, tubeless tires, and gear-tooth brakes. During 1961, Cleveland wheels and brakes were introduced on the Model 150, and on all Model 185 aircraft. The Cleveland assembly features a fixed brake disc attached to the wheel and a "floating" brake. Cleveland and Goodyear nose wheels are interchangeable on all models. Refer to Section 1 for tire sizes and pressures.

NOTE

The tubeless tires are filled by a special filler needle which is inserted directly into the tire through a filler valve in the sidewall. The filler needle is stored in a lubricant-packed case containing instructions for its use, and is normally stowed in the map compartment.

Nose wheel steering is accomplished through normal operation of the rudder pedals. The nose wheel is steerable through an arc of approximately 8° each side of neutral, after which it becomes free-swiveling up to a maximum of 30° right or left of center. Through use of the brakes the airplane can be pivoted about the outer wing strut fitting.

The nose gear of all tricycle-gear Cessnas is of the steerable, air-oil shock strut type. Except on the Model 150, the nose gear strut is attached to the fuselage by lightweight forgings. On the Model 150, the shock strut is attached to the engine mount.

Lightweight, attractive speed fairings are standard equipment on de luxe versions of late models, and may be installed as optional equipment on other non-retractable, tricycle-gear models. The speed fairings are of resin-bonded, glass fiber construction.

5-3. TROUBLE SHOOTING THE LANDING GEAR.

PROBABLE CAUSE	ISOLATION PROCEDURE	REMEDY
AIRPLANE LEANS TO ONE SIDE.		
Incorrect tire inflation.	Check with tire gage.	Inflate to correct pressure.
Landing gear attaching parts not tight.	Hoist airplane and check attaching parts.	Tighten loose parts and replace defective parts.
Landing gear spring excessively sprung.	Check visually.	Remove and replace.
Incorrect shimming at inboard end of spring.	If no defects are found, correct by adding shims or washers.	Install washers or shims as required. Refer to paragraph 5-6.
Bent axles.	Check visually.	Replace axles.
WHEEL BOUNCE EVIDENT EVEN ON SMOOTH SURFACE.		
Out of balance condition.	Check wheel balance.	Correct in accordance with paragraph 5-40.
NOSE WHEEL SHIMMY.		
Nose strut loose in attaching clamps.	Raise nose, remove cowl and check strut attachment.	Tighten nose strut attaching clamp bolts.
Shimmy dampener lacks fluid.	Check fluid level in shimmy dampener.	Service shimmy dampener.
Defective shimmy dampener.	Raise nose, turn nose wheel back and forth to check dampening.	Repair or replace defective shimmy dampener.
Loose or worn nose wheel steering linkage.	Check for evidence of play.	Tighten or replace defective linkage.
TIRES WEAR EXCESSIVELY.		
Incorrect tire inflation.	Check with tire gage.	Inflate to correct pressure.
Wheels out of alignment.	Check toe-in and camber.	Align in accordance with paragraph 5-24.
Landing gear spring excessively sprung.	Check visually.	Remove and replace.

TIRES WEAR EXCESSIVELY. (Cont).		
Incorrect shimming at inboard end of spring.	If no defects are found, correct by adding shims or washers.	Install washers or shims as required. Refer to paragraph 5-6.
Bent axles.	Check visually.	Replace axles.
Dragging brakes.	Jack wheel and spin to check for friction.	See paragraph 5-62.
Wheel bearings too tight.	Jack wheel and check for bearing drag.	Adjust properly.
Loose torque links.	Check for excessive clearances.	Add washers or replace as necessary.
Loose or defective nose wheel bearings.	Raise nose, check wheel bearings.	Tighten wheel bearings properly; replace, if defective.
Nose wheel out of balance.	Check wheel balance.	Correct in accordance with paragraph 5-40.
HYDRAULIC FLUID LEAKAGE FROM NOSE STRUT.		
Defective strut seals.	Check for evidence of fluid leakage.	Replace defective seals.
NOSE STRUT WILL NOT HOLD AIR PRESSURE.		
Defective air filler valve, or valve not tight.	Check for air leakage at valve.	Check gasket and tighten loose valve. Replace, if defective.
Defective strut seals.	Check for evidence of fluid leakage.	Replace defective seals.

NOTE

A Goodyear kit for repairing tubeless tires without removing them from wheels (Simplug Repair Kit No. 241-6251) is available locally from Goodyear Dealers.

5-4. MAIN GEAR.

5-5. REMOVAL.

NOTE

Three different methods are used to attach the main landing gear spring to the fuselage outboard structure. Wide U-bolts are used on some models, shims and wedges on others, and steel channels on others. The spring is attached to the fuselage inboard structure with a bolt which passes through a hole in the end of the spring.

a. Remove floorboard access covers over spring, remove screws and slide external fairing and seal down around spring, drain hydraulic brake fluid and hoist airplane.

b. On those models where the brake line is attached to a bulkhead fitting through the fuselage skin, disconnect the brake line at this fitting. On those models where the brake line connection is inside the fuselage beneath the floor, disconnect the brake line from the spring and the wheel brake cylinder. Remove the gear, leaving the brake line protruding from the fuselage.

c. On aircraft with U-bolts, remove the nuts and washers from the U-bolts and tap them free of the attaching structure. On aircraft with shims and wedges, remove the attaching bolts and pry the shims and wedges out of the fuselage. On aircraft with a channel, remove the attaching bolts, washers, and nuts and remove the channel.

d. Remove the bolt, washer, and nut attaching the inboard end of the spring and pull the entire gear out of the fuselage. Note shims and washers placed under the inboard end of the spring and mark them to be sure they are replaced correctly at reinstallation of the landing gear.

5-6. INSTALLATION.

a. Slide seal and external fairing plate over upper end of landing gear spring.

b. Slide spring into place and work shims and washers in position under inboard end of spring. Install bolt, washer, and nut to secure inboard end of spring.

NOTE

Shims (or AN960-616 washers on some models) are installed under the inboard end of the spring as required to level the wings within a total tolerance of three inches. If it was necessary to install any during manufacture, the number originally installed is stamped on the extreme end of the spring. However, more may be added whenever the wings exceed this tolerance during service.

c. Where U-bolts are used, install with washers and nuts. Where shims and wedges are used, tap them securely in place and install attaching bolts. Where a channel is used, install with bolts, washers, and nuts.

CAUTION

Make sure the identification arrow on the channel points forward. It is possible to install it incorrectly.

d. Lower aircraft from hoist.

e. Connect brake lines; refill and bleed brake system.

f. Install floorboard access covers, external fairings and seals.

5-7. STEP BRACKET REPLACEMENT.

NOTE

The step bracket is secured to the landing gear spring strut with Conley-Weld metal adhesive.

a. Mark the position of the bracket so that the replacement bracket will be installed in approximately the same position.

b. Remove all traces of the original adhesive as well as any rust, paint, or scale from the spring and the bracket by sand or grit blasting, if available, or with a wire brush and emery paper.

c. Leave surfaces slightly roughened or abraided, but deep scratches or nicks should be avoided.

d. Clean the surfaces to be bonded thoroughly. If a solvent is used, remove all traces of the solvent with a clean, dry cloth. It is important for the surfaces to be clean and dry.

e. Check the fit of the step bracket on the spring. A gap of not more than 1/32 inch is permissible.

f. Mix equal parts (by volume) of the adhesive (C-1 and C-2) and stir thoroughly.

g. Spread a coat of adhesive on the surfaces to be bonded, and place step bracket in position on the spring. Tap the bracket upward to insure a tight fit.

h. Form a small fillet of the adhesive at all edges of the bonded surfaces. Remove excess adhesive with lacquer thinner.

i. Allow the adhesive to cure thoroughly before flexing the gear spring or applying loads to the step.

NOTE

Curing time for Conley-Weld is approximately 12 hours at room temperature (70°F). Curing may be accelerated by the use of heat, such as infrared lamps (30 minutes to an hour will cure the adhesive at 200°F).

j. Repaint gear spring and step bracket after curing is complete.

5-8. MAIN WHEEL AND AXLE.

5-9. REMOVAL.

a. Disconnect, drain, and plug the hydraulic brake line at the brake cylinder.

b. Remove the wheel in accordance with paragraph 5-12 (or 5-18 for Cleveland wheels).

c. Remove the nuts and bolts securing axle and brake components to the spring strut. Note the number and position of the wheel alignment shims. Mark these shims carefully so they will be reinstalled in exactly the same position to ensure that wheel alignment is not disturbed. Remove axle and brake components.

5-10. INSTALLATION.

a. Secure axle and brake components to spring strut, making sure that wheel alignment shims are reinstalled in their original positions.

b. Install the wheel assembly in accordance with paragraph 5-16 (or 5-22 for Cleveland wheels).

c. Connect brake line. Fill and bleed the brake system.

5-11. MAIN WHEELS (Goodyear).

5-12. REMOVAL.

NOTE

This paragraph involves removing the wheel from the axle. The procedure may be used for tire replacement, wheel bearing replacement, and replacement of wheel brake parts.

a. Jack the wheel, using the universal jack point.
b. Remove the optional speed fairing (if installed), or the outer dust cover.
c. Remove cotter pins and axle nut.
d. Remove brake disc anti-rattle clips and disc retaining ring on those models where installed. Some later models have cantilever clips which must merely have one end raised to free the wheel from the brake disc.
e. Pull the wheel assembly off the axle, leaving the brake disc in place in the brake assembly.

5-13. DISASSEMBLY.
a. Completely deflate the tire. Remove the valve core in tube-type tires; insert filler needle in tubeless tires to release pressure. Break tire beads loose.

WARNING

Injury can result from attempting to separate wheel halves with tire inflated. Avoid damaging wheel flanges when breaking tire beads loose.

b. Remove thru-bolts and separate wheel halves.
c. Remove tire and tube. With tubeless tires, remove O-ring placed between wheel halves to seal them against leakage.
d. Remove bearing retaining rings, grease seals, and bearing cones. Various types have been used according to the model and date of manufacture.

NOTE

On early assemblies, the disc drive keys are held in place by staked screws, and the bearing cups on all models are a press fit in the wheel halves. Remove these parts only if replacement is necessary. To remove the bearing cups, heat the wheel half in boiling water for 15 minutes. Using an arbor press, if available, press out the bearing cup and press in the new one while the wheel is still hot.

5-14. INSPECTION AND REPAIR.
a. Clean all metal parts and the grease seal felts in solvent and dry thoroughly.
b. O-rings are usually replaced at each overhaul. When re-using an O-ring, wipe it clean with a clean, oiled cloth and inspect for damage.
c. Inspect wheel halves for cracks. Cracked wheel halves should be replaced. Sand out nicks, gouges, and corroded areas. Where the protective coating has been removed, the area should be cleaned thoroughly, primed with zinc chromate primer, and repainted with aluminum lacquer.
d. Brake discs should be replaced if excessively scored or warped. Small nicks and scratches should be sanded smooth.
e. Bearing cups and cones should be inspected carefully for damage and discoloration. After cleaning, repack bearing cones with clean bearing grease before installation in the wheel.

5-15. ASSEMBLY.
a. On tube-type tires, insert tube in tire, aligning yellow stripe on tube with red dot on tire. Place outboard wheel half in tire and position valve stem through valve hole. Insert thru-bolts, position inboard wheel half, and secure with nuts and washers. Take care to avoid pinching tube between wheel halves. Torque to value marked on wheel.
b. On tubeless tires, insert thru-bolts through inner wheel half. Place the tire around the wheel half with the inflation valve outboard. Inspect the O-ring groove on both wheel halves to assure a smooth, clean surface. Dirt or chips under the O-ring will cause and air leak. Wipe the O-ring with clean bearing grease and center in the O-ring groove. Place the other wheel half in position. Apply a light force to bring the wheel valves together; if the wheel halves do not bottom solidly together, the O-ring is not placed properly. Maintaining the light force, assemble a washer and nut on one thru-bolt and tighten snugly. Assemble the remaining nuts and washers on the thru-bolts and torque to the value marked on the wheel.

CAUTION

Uneven or improper torque of thru-bolt nuts may cause bolt failure with resultant wheel failure.

c. Clean and repack bearing cones with clean wheel bearing grease.
d. Assemble bearing cones, seals, and retainers into the wheel halves.

NOTE

Various bearings, seals, and retainers have been used among the different models, according to their date of manufacture.

e. Inflate tire to seat tire beads, then adjust to correct pressure.

NOTE

A tire expander to facilitate tubeless tire installation is available from the Cessna Spare Parts Department. Wheel balancing kits for tubeless Goodyear wheel assemblies are also available. Goodyear Kit No. 9524859 is for 5.00-5 wheels and Kit No. 9524877 is for 6.00-6 wheels.

5-16. INSTALLATION.
a. Place wheel on axle. On the Model 150, install collar (17, figure 5-7) on axle first.
b. Position brake disc in the wheel as the wheel is

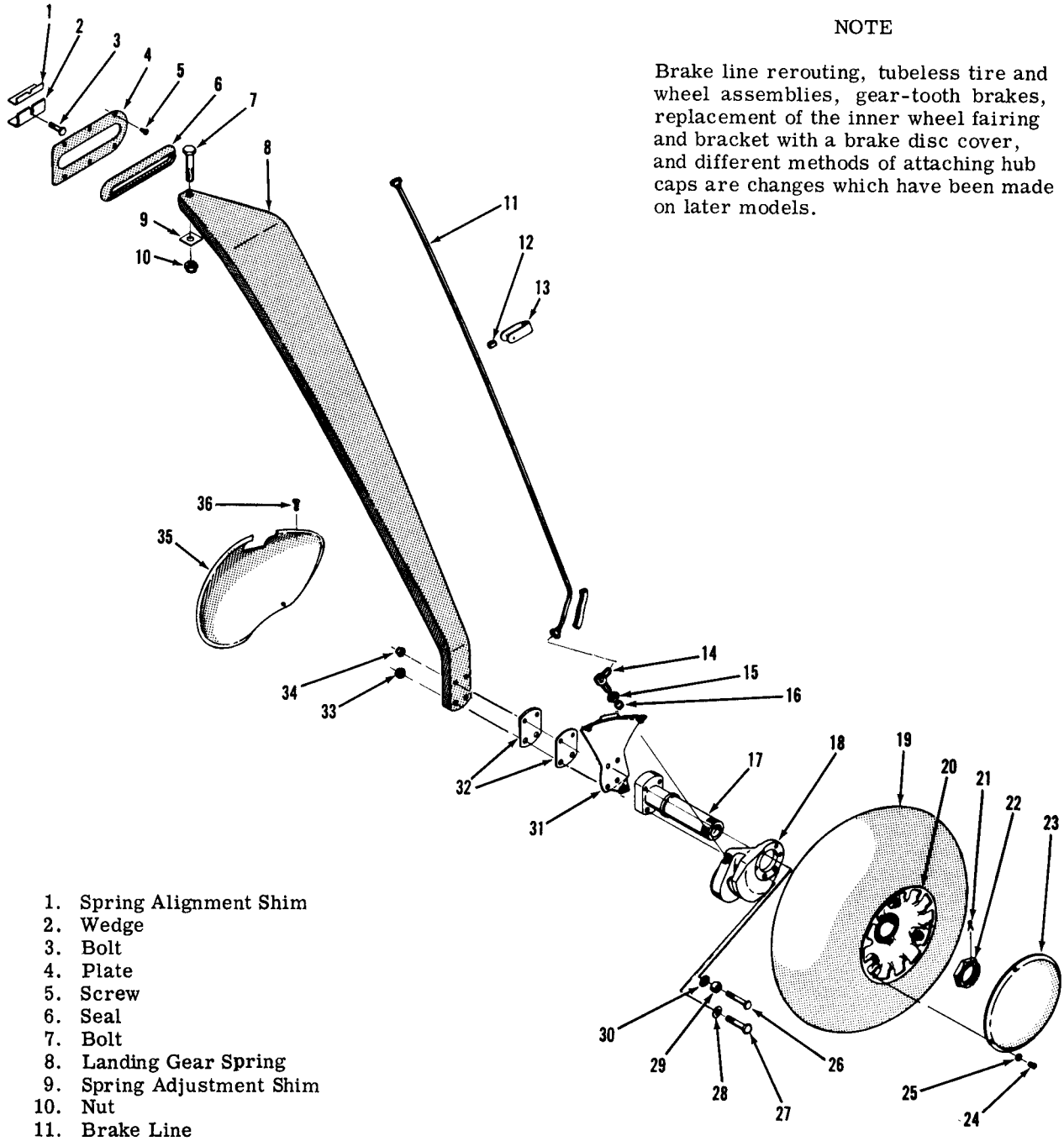

NOTE

Brake line rerouting, tubeless tire and wheel assemblies, gear-tooth brakes, replacement of the inner wheel fairing and bracket with a brake disc cover, and different methods of attaching hub caps are changes which have been made on later models.

1. Spring Alignment Shim
2. Wedge
3. Bolt
4. Plate
5. Screw
6. Seal
7. Bolt
8. Landing Gear Spring
9. Spring Adjustment Shim
10. Nut
11. Brake Line
12. Hose
13. Brake Line Retainer Bracket
14. Elbow
15. Nut
16. Gasket
17. Axle
18. Brake Assembly
19. Tire and Tube
20. Wheel Assembly
21. Cotter Pin
22. Axle Nut
23. Dust Cover
24. Screw
25. Washer
26. Bolt
27. Bolt
28. Washer
29. Bushing
30. Washer
31. Wheel Fairing Bracket
32. Wheel Alignment Shims
33. Nut
34. Nut
35. Fairing
36. Screw

Figure 5-1. Main Gear - Model 180

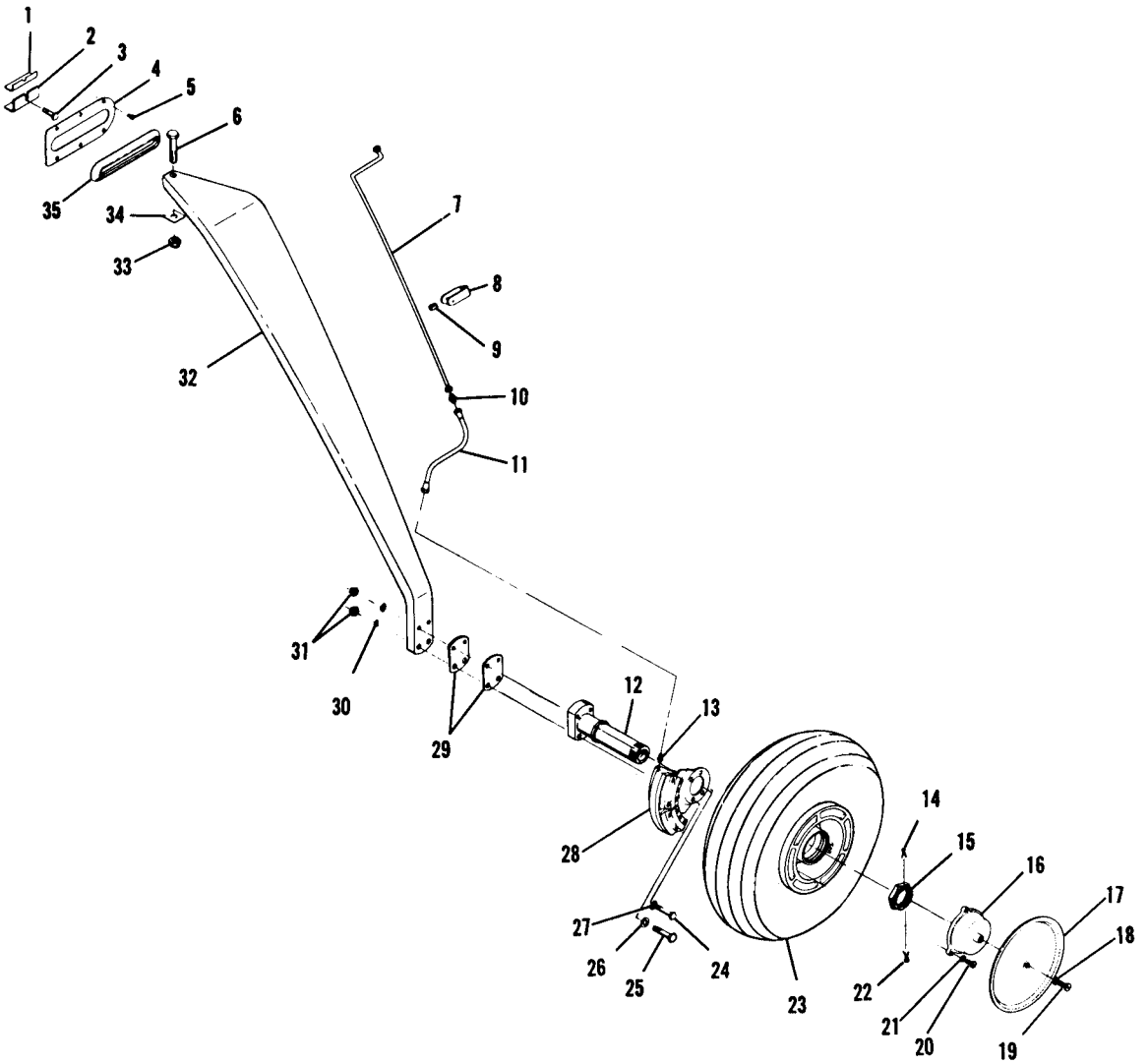

1. Shim
2. Wedge
3. Bolt
4. Plate
5. Screw
6. Bolt
7. Brake Line
8. Brake Line Clip
9. Hose
10. Fitting
11. Brake Hose
12. Axle
13. Fitting
14. Cotter Pin
15. Nut
16. Hub Cap
17. Outer Dust Cover
18. Lockwasher
19. Screw
20. Screw
21. Lockwasher
22. Cotter Pin
23. Wheel Assembly
24. Bolt
25. Bolt
26. Washer
27. Washer
28. Brake Assembly
29. Shims
30. Washers
31. Nuts
32. Spring
33. Nut
34. Shim
35. Seal

Figure 5-2. Main Gear - Model 185

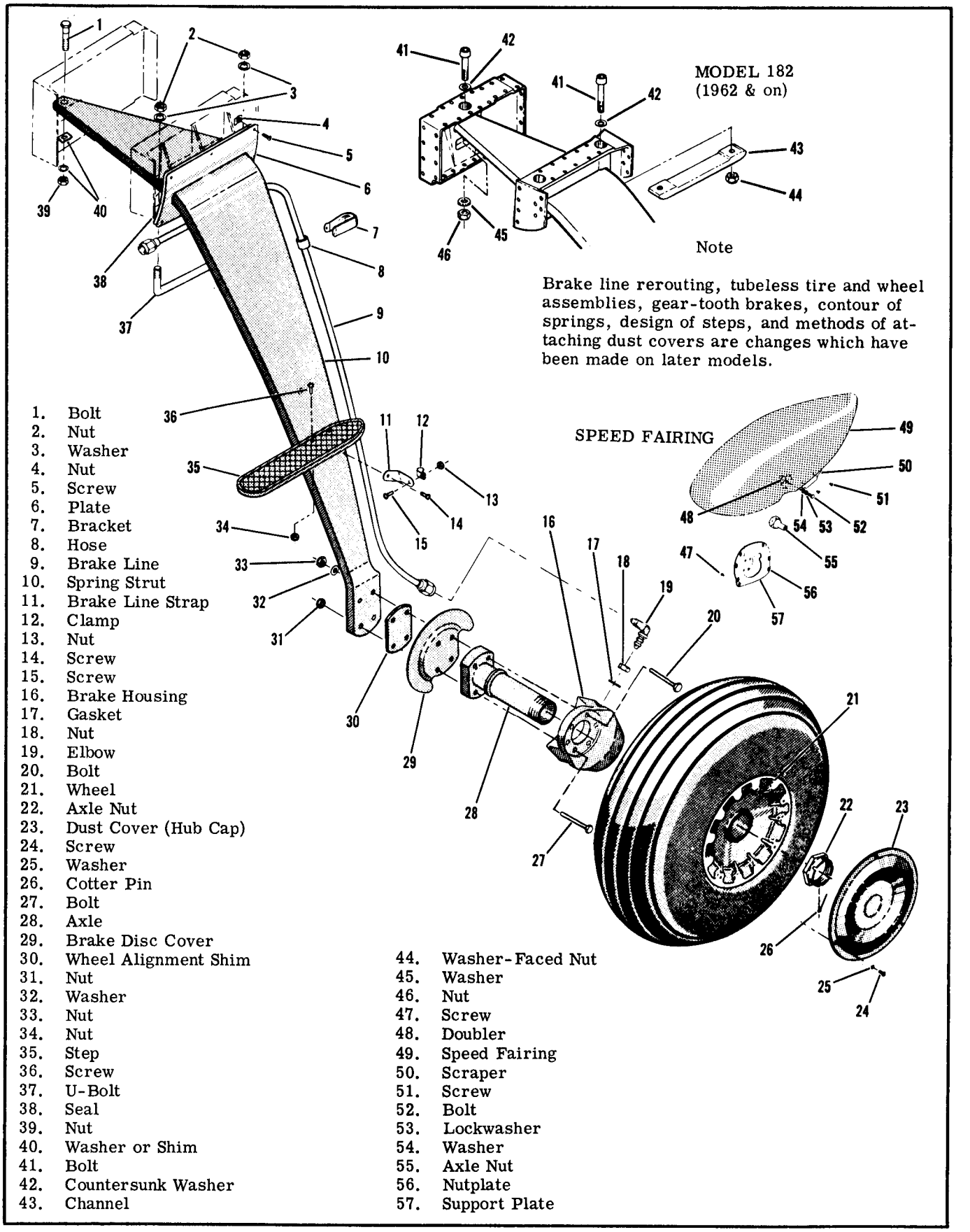

Note

Brake line rerouting, tubeless tire and wheel assemblies, gear-tooth brakes, contour of springs, design of steps, and methods of attaching dust covers are changes which have been made on later models.

1. Bolt
2. Nut
3. Washer
4. Nut
5. Screw
6. Plate
7. Bracket
8. Hose
9. Brake Line
10. Spring Strut
11. Brake Line Strap
12. Clamp
13. Nut
14. Screw
15. Screw
16. Brake Housing
17. Gasket
18. Nut
19. Elbow
20. Bolt
21. Wheel
22. Axle Nut
23. Dust Cover (Hub Cap)
24. Screw
25. Washer
26. Cotter Pin
27. Bolt
28. Axle
29. Brake Disc Cover
30. Wheel Alignment Shim
31. Nut
32. Washer
33. Nut
34. Nut
35. Step
36. Screw
37. U-Bolt
38. Seal
39. Nut
40. Washer or Shim
41. Bolt
42. Countersunk Washer
43. Channel
44. Washer-Faced Nut
45. Washer
46. Nut
47. Screw
48. Doubler
49. Speed Fairing
50. Scraper
51. Screw
52. Bolt
53. Lockwasher
54. Washer
55. Axle Nut
56. Nutplate
57. Support Plate

Figure 5-3. Typical Tricycle Main Gear (Except Model 150)

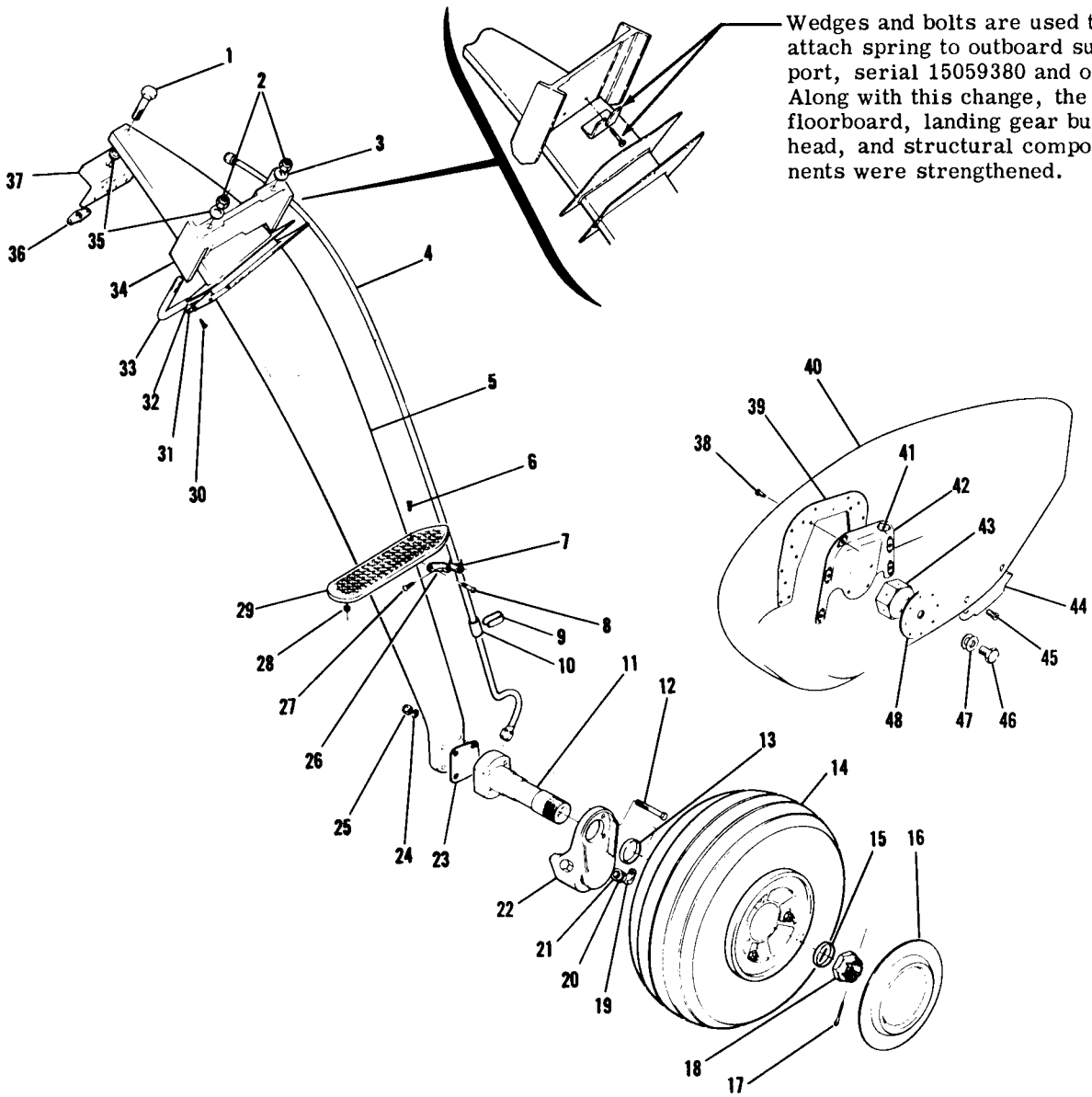

1. Bolt
2. Nut
3. Washer
4. Brake Line
5. Spring
6. Screw
7. Brake Line Clamp
8. Screw
9. Brake Line Clip
10. Hose
11. Axle
12. Bolt
13. Collar
14. Wheel Assembly
15. Collar
16. Outer Dust Cover
17. Cotter Pin
18. Nut
19. Elbow
20. Nut
21. Gasket
22. Brake Assembly
23. Shim
24. Washer
25. Nut
26. Bracket
27. Screw
28. Nut
29. Step
30. Screw
31. Plate
32. Seal
33. U-bolt
34. Outer Support
35. Washer
36. Nutplate
37. Inner Support
38. Screw
39. Doubler
40. Speed Fairing
41. Nutplate
42. Plate
43. Nut
44. Scraper
45. Screw
46. Bolt
47. Washer
48. Doubler

Figure 5-4. Main Gear - Model 150

being slipped into place. Install anti-rattle clips and disc retainer on those models where used. The later cantilever clips must be raised at one end while installing the disc.

c. Make sure outer bearing, seal, and retaining parts (and the outer collar on the Model 150) are in place, then install axle nut and tighten until a slight bearing drag is obvious when the wheel is turned. Back off the nut to the nearest castellation and install cotter pins.

d. Install the optional speed fairings, if used, or the outer dust cover. Remove jack.

NOTE

Whenever a main tire is changed on an airplane equipped with speed fairings, check that the scraper clearance is .25 to .38 inch.

5-17. MAIN WHEELS (Cleveland).

5-18. REMOVAL.

NOTE

It is not necessary to remove the wheel to reline brakes or remove brake parts (other than the brake disc or torque plate) on Cleveland wheel and brake assemblies.

a. Jack the wheel, using the universal jack point.

b. Remove the optional speed fairing (if installed), or the outer dust cover.

c. Remove hub cap to expose axle nut. On the Model 185, the hub cap is secured with three screws. On the Model 150, it is secured with a lock ring. When speed fairings are used on the Model 150, the hub cap is replaced with grease seals and rings.

d. Remove cotter pins and axle nut.

e. (See figure 5-7.) On the Model 150, remove bolts (29) and washers (31) securing back plate (39) and shim (36), and remove the back plate and shim. Pull the wheel from the axle, removing collars (8 and 17) and bearing cone (9) as the wheel is removed. If speed fairings are installed, the bearing cone and grease seals will be removed during disassembly.

f. (See figure 5-8.) On the Model 185, remove bolts (29) and washers (30) securing back plates (41) and shim (36), and remove the back plates and shim. Pull the wheel from the axle, removing bearing cone (5) as the wheel is removed.

5-19. DISASSEMBLY.

a. Deflate tire and break tire beads loose.

CAUTION

Avoid damaging wheel flanges when breaking tire beads loose. A scratch, gouge, or nick may cause an air leak.

b. Remove thru-bolts and separate wheel halves, removing O-ring, tire, and brake disc.

c. On the Model 150, remove the snap ring, grease seal felt, grease seal rings, and bearing cone from the inner wheel half. On airplanes without speed fairings, also remove these parts from the outer wheel half.

d. On the Model 185, remove the grease seal ring, felt and plate, and the bearing cone from the inner wheel half.

NOTE

The bearing cups are a press fit in the wheel halves and should not be removed unless replacement is necessary. To remove the bearing cups, heat the wheel half in boiling water for 15 minutes. Using an arbor press, if available, press out the bearing cup and press in the new one while the wheel is still hot.

5-20. INSPECTION AND REPAIR. Instructions given in paragraph 5-14 for the Goodyear wheels also apply to the Cleveland wheels.

5-21. ASSEMBLY.

a. Insert thru-bolts through brake disc and position in the inner wheel half, using the bolts to guide the disc. Assure that the disc is bottomed in the wheel half.

b. Place the tire around the wheel half with the inflation valve outboard. Inspect the O-ring groove on both wheel halves to assure a smooth, clean surface. Dirt or chips under the O-ring will cause an air leak. Wipe the O-ring with clean bearing grease and center in the O-ring groove. Place the other wheel half in position. Apply a light force to bring the wheel halves together; if the wheel halves do not bottom solidly together, the O-ring is not placed properly. Maintaining the light force, assemble a washer and nut on one thru-bolt and tighten snugly. Assemble the remaining nuts and washers on the thru-bolts and torque to the value marked on the wheel.

CAUTION

Uneven or improper torque of thru-bolt nuts may cause failure with resultant wheel failure.

c. Clean and repack bearing cones with clean wheel bearing grease.

d. On the Model 185, assemble the bearing cone, grease seal plate, felt, and ring into the inner wheel half. Assemble bearing cone into the outer wheel half as the wheel is installed on the axle.

e. On the Model 150, assemble the bearing cone, grease seal rings, felt, and snap ring into the inner wheel half. If speed fairings are not used, also assemble these parts into the outer wheel half. If speed fairings are used, the bearing cone is assembled into the outer wheel half as the wheel is installed on the axle.

f. Inflate tire to seat tire beads, then adjust to correct pressure.

NOTE

A tire expander to facilitate tubeless tire installation is available from the Cessna Spare Parts Department.

Note

Wheel bolt torque is stamped on the outboard wheel half.

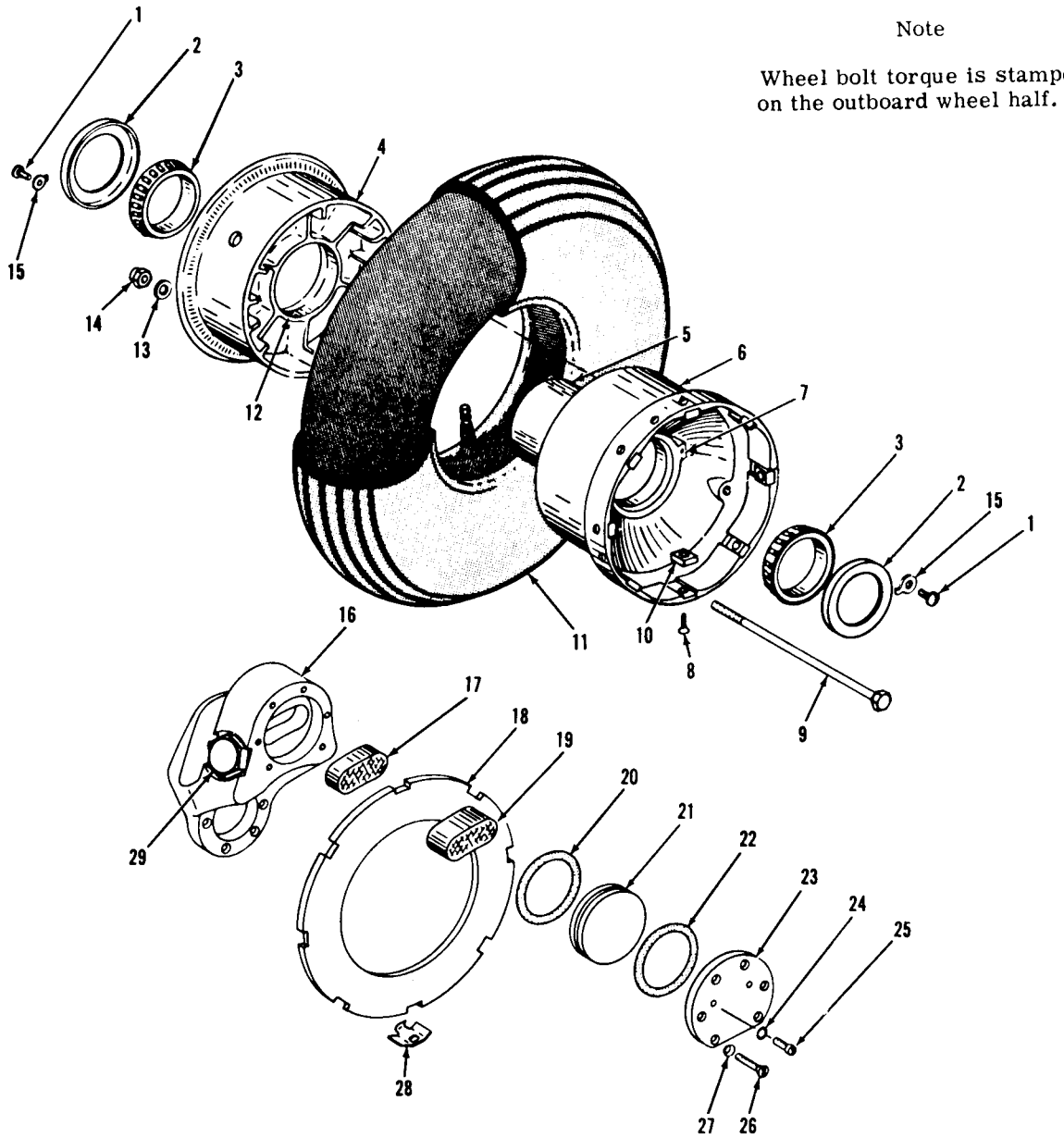

1. Screw
2. Bearing Retainer Ring
3. Bearing Cone
4. Outboard Wheel Half
5. Hub Spacer
6. Inboard Wheel Half
7. Bearing Cup
8. Screw
9. Bolt
10. Disc Drive Key
11. Tire
12. Bearing Cup
13. Washer
14. Nut
15. Locking Terminal
16. Brake Housing Assembly
17. Stationary Lining
18. Brake Disc
19. Piston Lining
20. Piston O-ring Seal
21. Piston
22. Cylinder O-ring Seal
23. Cylinder Head
24. Bleeder Seal
25. Bleeder Screw
26. Screw
27. Lock Washer
28. Disc Clip
29. Inlet Plug

Figure 5-5. Goodyear Main Wheel and Brake (Tube Type Tire)

NOTE

Wheel bolt torque is stamped on the outboard wheel half.

Goodyear wheel balancing kits for tubeless wheels, Kit No. 9524859 for 5.00-5 wheels and Kit No. 9524877 for 6.00-6 wheels, are available from the Cessna Spare Parts Department.

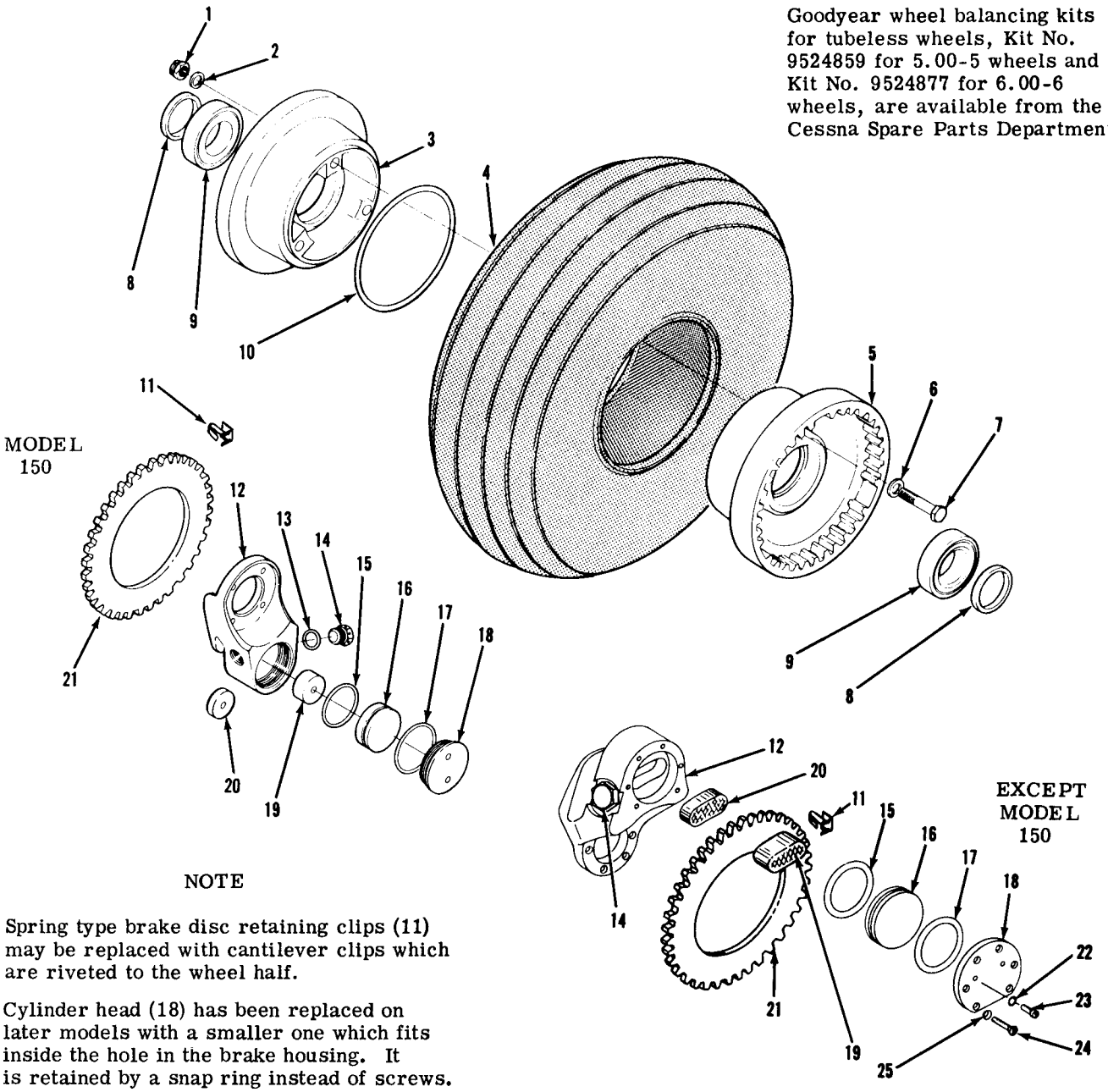

NOTE

Spring type brake disc retaining clips (11) may be replaced with cantilever clips which are riveted to the wheel half.

Cylinder head (18) has been replaced on later models with a smaller one which fits inside the hole in the brake housing. It is retained by a snap ring instead of screws.

1. Nut
2. Washer
3. Outboard Wheel Half
4. Tubeless Tire
5. Inboard Wheel Half
6. Washer
7. Bolt
8. Collar (Model 150)
9. Bearing
10. O-ring
11. Clip
12. Housing
13. O-ring
14. Plug
15. O-ring
16. Piston
17. O-ring
18. Cylinder Head
19. Piston Lining
20. Stationary Lining
21. Disc
22. Seal
23. Bleeder Screw
24. Screw
25. Lockwasher

Figure 5-6. Goodyear Main Wheel and Brake (Tubeless Tire and Gear-Tooth Brake)

SHOP NOTES:

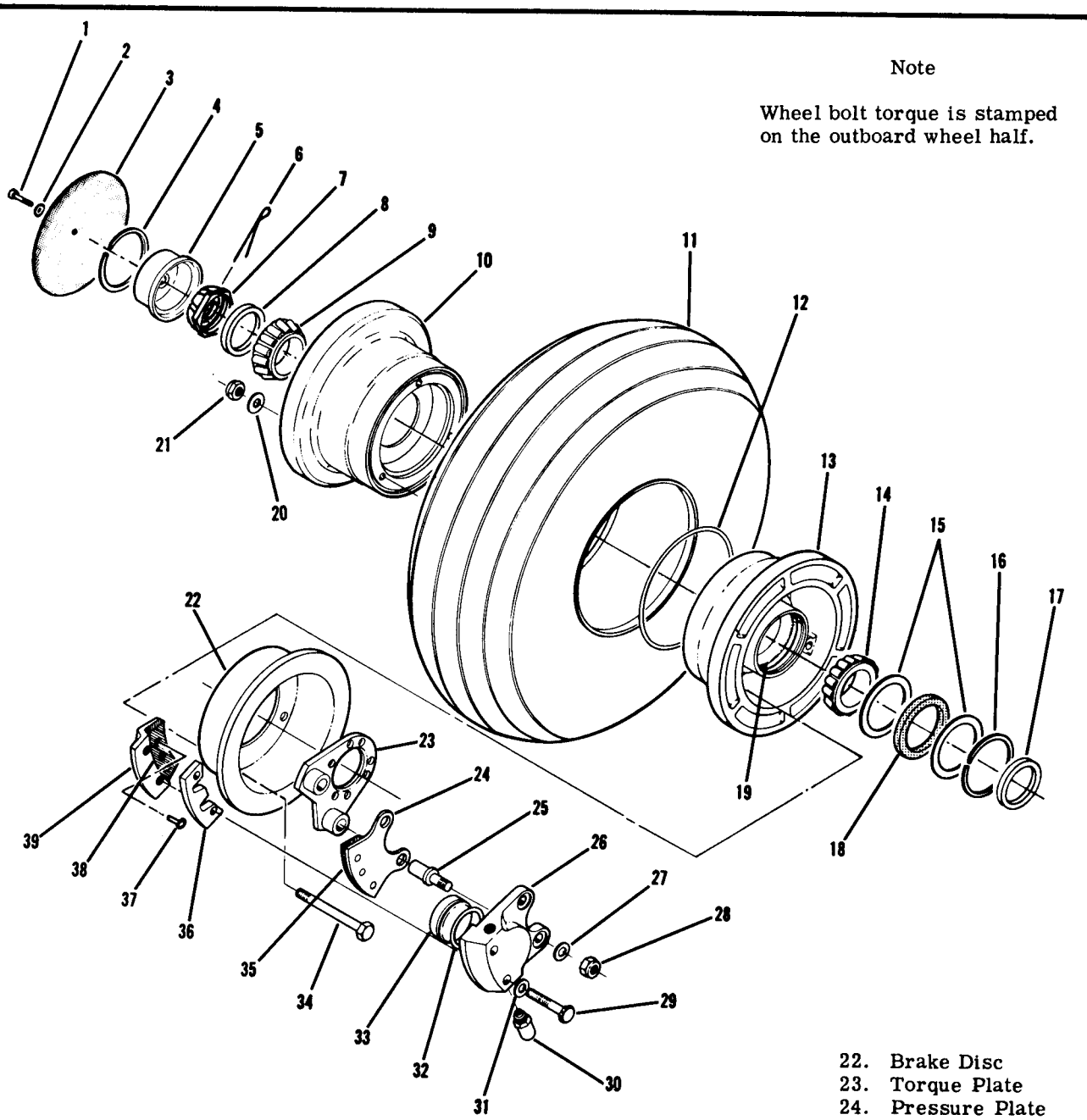

Note

Wheel bolt torque is stamped on the outboard wheel half.

1. Screw
2. Lockwasher
3. Outer Dust Cover
4. Lock Ring
5. Hub Cap
6. Cotter Pin
7. Axle Nut
8. Collar
9. Bearing Cone
10. Outer Wheel Half
11. Tire
12. O-ring
13. Inner Wheel Half
14. Bearing Cone
15. Grease Seal Rings
16. Snap Ring
17. Collar
18. Grease Seal Felt
19. Bearing Cup
20. Washer
21. Nut
22. Brake Disc
23. Torque Plate
24. Pressure Plate
25. Anchor Bolt
26. Brake Cylinder
27. Washer
28. Nut
29. Bolt
30. Brake Bleeder
31. Washer
32. O-ring
33. Piston
34. Thru-bolt
35. Brake Lining
36. Shim
37. Brake Rivet
38. Brake Lining
39. Back Plate

Figure 5-7. Cleveland Main Wheel and Brake - Model 150

Note

Wheel bolt torque is stamped on the outboard wheel half.

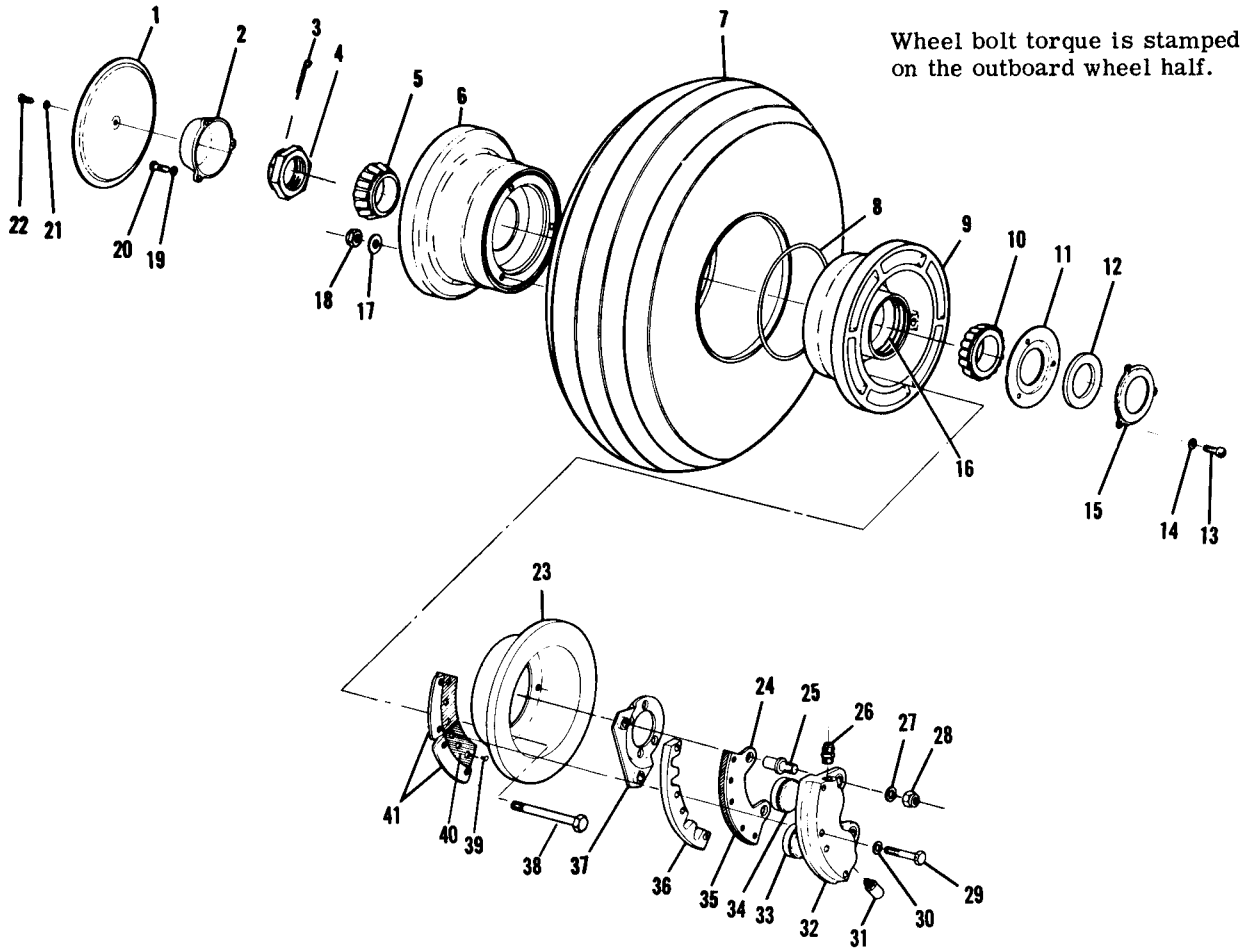

1. Outer Dust Cover
2. Hub Cap
3. Cotter Pin
4. Nut
5. Bearing Cone
6. Outer Wheel Half
7. Tire
8. O-ring
9. Inner Wheel Half
10. Bearing Cone
11. Grease Seal Plate
12. Grease Seal Felt
13. Screw
14. Lockwasher
15. Grease Seal Ring
16. Bearing Cup
17. Washer
18. Nut
19. Lockwasher
20. Screw
21. Lockwasher
22. Screw
23. Brake Disc
24. Pressure Plate
25. Anchor Bolt
26. Brake Line Fitting
27. Washer
28. Nut
29. Bolt
30. Washer
31. Brake Bleeder
32. Brake Cylinder
33. Piston
34. O-ring
35. Brake Lining
36. Shim
37. Torque Plate
38. Bolt
39. Rivet
40. Brake Lining
41. Back Plates

Figure 5-8. Cleveland Main Wheel and Brake - Model 185

5-22. INSTALLATION.

a. Place wheel on axle. On the Model 150, install collar (17, figure 5-7) on axle first, then place the wheel on the axle and install outer bearing cone and remaining collar. If speed fairings are used, the outer bearing cone is already installed in the wheel.

b. Install axle nut and tighten until a slight bearing drag is obvious when the wheel is turned. Back off the nut to the nearest castellation and install cotter pins.

c. On the Model 185, install hub cap and outer dust cover.

d. On the Model 150 without speed fairings, install hub cap, lock ring, and outer dust cover.

e. (See figure 5-8.) On the Model 185, place shim (36) and back plates (41) in position and secure with bolts (29) and washers (30). Safety the bolts.

f. (See figure 5-7.) On the Model 150, place shim (36) and back plate (39) in position and secure with bolts (29) and washers (31). Safety the bolts. Install the optional speed fairing, if used.

NOTE

Whenever a main tire is changed on an airplane equipped with speed fairings, check that the scraper clearance is .25 to .38 inch.

5-23. MAIN WHEEL ALIGNMENT.

5-24. Correct camber and toe-in of the main wheels are essential for minimum tire wear and for proper taxiing characteristics. Refer to figures 5-9 and 5-10 for proper alignment for each model. Alignment should be checked with the main wheels on grease plates which allow the wheels to attain a "normal" position, free of tire-ground friction. A straight 2 × 4 or straightedge and a carpenter's square are required for the toe-in check, and a protractor level is used for the camber check.

5-25. CROSSWIND WHEELS. (See figure 5-11.)

5-26. Crosswind wheels are optional equipment on all Model 180 aircraft except the 1957 and 1958 models, which feature the crosswind wheels as standard equipment. The crosswind wheel installation requires a flexible, rather than rigid, brake line because of the castering movement of the wheel. Components of the crosswind wheel are illustrated in figure 5-11, which may be used as a guide during maintenance. Further information may be found in Goodyear publications.

5-27. NOSE GEAR.

5-28. A steerable nose wheel mounted on an air-oil shock strut comprises the nose gear. In all models except the 150, the shock strut is attached to forgings riveted to the firewall and lower fuselage. In the 150, the shock strut is secured to the tubular engine mount. Nose wheel steering on all models except the 182 (1962 and on) is afforded by two spring-loaded push-pull tubes linking the nose gear to the rudder pedal bars. The Model 182 (1962 and on) has one steering bungee linking the nose gear to a bellcrank which is operated by push-pull rods from the rudder pedal bars. The aft end of the bungee incorporates a sprocket-operated screw mechanism to furnish rudder trim when airborn. A fluid-filled shimmy dampener is provided on all models to minimize wheel shimmy. A speed fairing of laminated glass fiber encloses the nose wheel on de luxe versions of later models, and is optional equipment on others.

5-29. NOSE GEAR SHIMMY DAMPENER. The shimmy dampener provided for the nose gear offers resistance to shimmy by forcing hydraulic fluid through small orifices in a piston. The housing is attached to the steering arm assembly which turns as the nose wheel turns, while the piston rod is fastened to the upper strut which does not turn, thus causing motion between the housing and piston. Various methods of mounting shimmy dampeners have been used on the different models; however, all cause motion between the piston rod and housing to achieve the dampening action.

5-30. NOSE GEAR TORQUE LINKS. Forged aluminum alloy torque links, which keep the lower strut aligned with the nose gear steering system but permit shock strut action, are provided for the nose gear.

5-31. REPLACEMENT OF NOSE GEAR. (See figure 5-13.)

a. Remove the engine cowl and weight or tie down the tail to raise the nose wheel off the ground.

b. Disconnect the nose gear steering tubes or bungee from the nose gear.

c. Deflate the strut completely and telescope it to its shortest length.

WARNING

Be sure strut is deflated completely before removing the bolt or roll pin securing the top of the strut.

d. Except on the 182 (1962 and on), and the 150, remove bolt (3) securing the top of the strut and bolts (1) securing the strut at the lower attachment point. Pull the strut down, out of the upper forging.

e. (See figure 5-12.) On the 150, remove roll pin (4) securing the top of the strut and loosen bolt (8) which clamps the strut to the lower engine mount, then pull the strut down through the lower attachment point to remove.

f. (See figure 5-13A.) On the 182 (1962 and on), two methods may be used to remove the strut. The following procedure outlines removing the strut along with the lower forging which secures it to the fuselage. The strut may then be disassembled as required for replacement of parts. An alternate method is to remove and disconnect parts as required to slide the strut down through the lower forging, leaving it attached to the fuselage.

1. Remove bolt (4) securing the top of the strut.

2. Remove bolts (1) and the two bolts on the underside of lower forging (7). Remove the rudder bar shields from inside the cabin for access to the nuts.

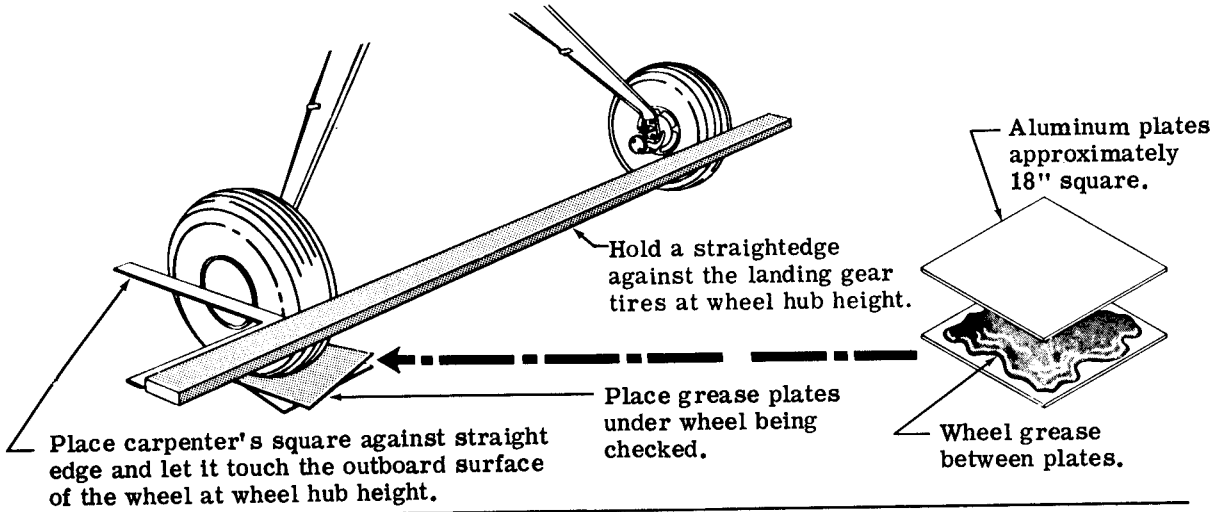

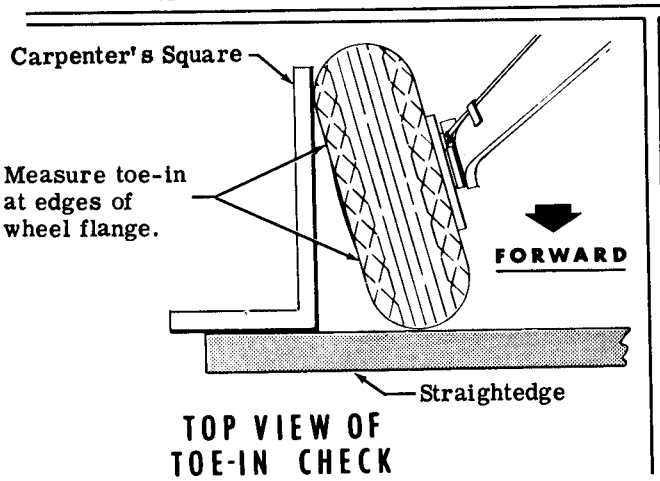

TOP VIEW OF TOE-IN CHECK

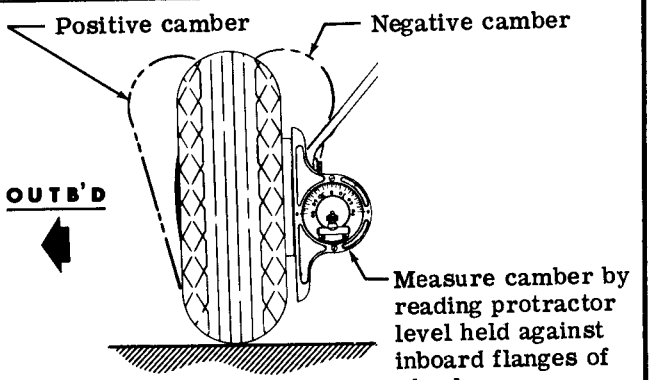

FRONT VIEW OF CAMBER CHECK

AIRPLANE MODEL	TOE-IN	POSITIVE CAMBER
150	0" to .06"	4° to 6°
172	0" to .06"	3° to 5°
175	0" to .06"	3° to 5°
180	0" to .12"	4° to 6°
182	0" to .06"	5° to 7°
185	0" to .12"	4° to 6°

AIRPLANE MODEL	MAX. ACCUMULATED SHIM THICKNESS (Measured at thickest corner)
150	.40"
172	.32"
175	.26"
180	.18"
182	(Prior to 1962) .28"
185	.10"

NOTE

Setting toe-in and camber in accordance with the charts above while the cabin and fuel tanks are empty will give approximately zero toe-in and zero camber at gross weight. Ideal setting is zero toe-in and zero camber at normal operating weight. Therefore, if normally operated at less than gross weight and abnormal tire wear occurs, realign the wheels to attain the ideal setting for the load condition under which the airplane normally operates. The maximum shim thickness includes any plates installed for speed fairing attachment or as protective covers. Always use the least number of shims possible to obtain the desired result. Refer to figure 5-10 (Sheet 3) for accumulated shim usage on the Model 182 (1962 and on).

Figure 5-9. Main Gear Alignment

SHIM CHART FOR ➧ MODEL 170 SERIAL 18003 & ON
MODEL 180 SERIAL 30000 & ON
MODEL 172 SERIALS PRIOR TO 36216
MODEL 185 SERIAL 185-0001 & ON

SHIM PART NO.	POSITION OF THICKEST CORNER OF SHIM	CORRECTION IMPOSED ON WHEEL			
		TOE-IN	TOE-OUT	POS. CAMBER	NEG. CAMBER
0541111-2	UP & FWD	----	.11"	2°56'	----
	UP & AFT	.25"	----	2°17'	----
	DOWN & FWD	----	.25"	----	2°17'
	DOWN & AFT	.11"	----	----	2°56'
0441139-5	UP & FWD	----	.10"	0°30'	----
	UP & AFT	.12"	----	0°5'	----
	DOWN & FWD	----	.12"	----	0°5'
	DOWN & AFT	.10"	----	----	0°30'
0441139-6	UP & FWD	----	.20"	1°0'	----
	UP & AFT	.25"	----	0°10'	----
	DOWN & FWD	----	.25"	----	0°10'
	DOWN & AFT	.20"	----	----	1°0'

MODEL 150 SHIM DATA

Model 150 shims can be installed in any one of four positions to obtain the desired result. The 0441157-1 shim imposes 1/2° of camber correction or .06" toe-in (or toe-out) correction, and the 0441157-2 shim imposes 2° of camber correction or .23" toe-in (or toe-out) correction.

SHIM CHART FOR ➧ MODEL 182 SERIAL 33000 THRU 33842

SHIM PART NO.	POSITION OF THICKEST CORNER OR EDGE OF SHIM	CORRECTION IMPOSED ON WHEEL			
		TOE-IN	TOE-OUT	POS. CAMBER	NEG. CAMBER
0541157-1	AFT	.06"	----	----	0°2'
	FWD	----	.06"	0°2'	----
0541157-2	UP	.004"	----	0°30'	----
	DOWN	----	.004"	----	0°30'
0541111-2	UP & FWD	----	.16"	2°46'	----
	UP & AFT	.21"	----	2°34'	----
	DOWN & FWD	----	.21"	----	2°34'
	DOWN & AFT	.16"	----	----	2°46'
0441139-5	UP & FWD	----	.11"	0°22'	----
	UP & AFT	.12"	----	0°14'	----
	DOWN & FWD	----	.12"	----	0°14'
	DOWN & AFT	.11"	----	----	0°22'
0441139-6	UP & FWD	----	.22"	0°44'	----
	UP & AFT	.23"	----	0°28'	----
	DOWN & FWD	----	.23"	----	0°28'
	DOWN & AFT	.22"	----	----	0°44'

Figure 5-10. Wheel Alignment Shims (Sheet 1)

SHIM CHART FOR ➧ MODEL 182 SERIAL 53007 THRU 18253598

SHIM PART NO.	POSITION OF THICKEST CORNER OR EDGE OF SHIM	CORRECTION IMPOSED ON WHEEL			
		TOE-IN	TOE-OUT	POS. CAMBER	NEG. CAMBER
0541157-1	AFT	.06"	----	----	0°4'
	FWD	----	.06"	0°4'	----
0541157-2	UP	.008"	----	0°29'	----
	DOWN	----	.008"	----	0°29'
0541111-2	UP & FWD	----	.14"	2°51'	----
	UP & AFT	.24"	----	2°25'	----
	DOWN & FWD	----	.24"	----	2°25'
	DOWN & AFT	.14"	----	----	2°51'
0441139-5	UP & FWD	----	.11"	0°26'	----
	UP & AFT	.12"	----	0°10'	----
	DOWN & FWD	----	.12"	----	0°10'
	DOWN & AFT	.11"	----	----	0°26'
0441139-6	UP & FWD	----	.22"	0°52'	----
	UP & AFT	.24"	----	0°20'	----
	DOWN & FWD	----	.24"	----	0°20'
	DOWN & AFT	.22"	----	----	0°52'

SHIM CHART FOR ➧ MODEL 175 SERIAL 55001 & ON
MODEL 182 SERIAL 33843 THRU 53007
MODEL 172 SERIAL 36216 & ON

SHIM PART NO.	POSITION OF THICKEST CORNER OR EDGE OF SHIM	CORRECTION IMPOSED ON WHEEL			
		TOE-IN	TOE-OUT	POS. CAMBER	NEG. CAMBER
0541157-1	AFT	.06"	----	----	0°3'
	FWD	----	.06"	0°3'	----
0541157-2	UP	.006"	----	0°30'	----
	DOWN	----	.006"	----	0°30'
0541111-2	UP & FWD	----	.15"	2°50'	----
	UP & AFT	.23"	----	2°29'	----
	DOWN & FWD	----	.23"	----	2°29'
	DOWN & AFT	.15"	----	----	2°50'
0441139-5	UP & FWD	----	.11"	0°25'	----
	UP & AFT	.12"	----	0°11'	----
	DOWN & FWD	----	.12"	----	0°11'
	DOWN & AFT	.11"	----	----	0°25'
0441139-6	UP & FWD	----	.22"	0°50'	----
	UP & AFT	.24"	----	0°22'	----
	DOWN & FWD	----	.24"	----	0°22'
	DOWN & AFT	.22"	----	----	0°50'

Figure 5-10. Wheel Alignment Shims (Sheet 2)

SHIM CHART FOR ➧ MODEL 182 SERIAL 18253599 & ON

SHIM PART NO.	POSITION OF THICKEST CORNER OR EDGE OF SHIM	CORRECTION IMPOSED ON WHEEL			
		TOE-IN	TOE-OUT	POS. CAMBER	NEG. CAMBER
0541157-1	AFT	.06"	----	----	0°3'
	FWD	----	.06"	0°3'	----
0541157-2	UP	.006"	----	0°30'	----
	DOWN	----	.006"	----	0°30'
1241061-1	UP & FWD	.03"	----	2°50'	----
	UP & AFT	.06"	----	2°49'	----
	DOWN & FWD	----	.06"	----	2°49'
	DOWN & AFT	----	.03"	----	2°50'
0411139-5	UP & FWD	----	.11"	0°25'	----
	UP & AFT	.12"	----	0°11'	----
	DOWN & FWD	----	.12"	----	0°11'
	DOWN & AFT	.11"	----	----	0°25'
0441139-6	UP & FWD	----	.22"	0°50'	----
	UP & AFT	.24"	----	0°22'	----
	DOWN & FWD	----	.24"	----	0°22'
	DOWN & AFT	.22"	----	----	0°50'
0541157-3	AFT	.12"	----	----	0°7'
	FWD	----	.12"	0°7'	----

MODEL 182 SERIAL 18253599 & ON

SHIM NO.	1241061-1	0441139-6	0441139-5	0541157-2	0541157-1	0541157-3
1241061-1	0	0	0	0	0	0
0441139-6	0	0	0	1	1	0
0441139-5	0	0	1	1	2	0
0541157-2	0	1	1	2	2	0
0541157-1	0	1	1	2	2	0
0541157-3	0	0	1	2	1	0
SHIM NO.	Max. number of shims to be used with shims in column 1.					
COLUMN 1	COLUMN 2					

Figure 5-10. Wheel Alignment Shims (Sheet 3)

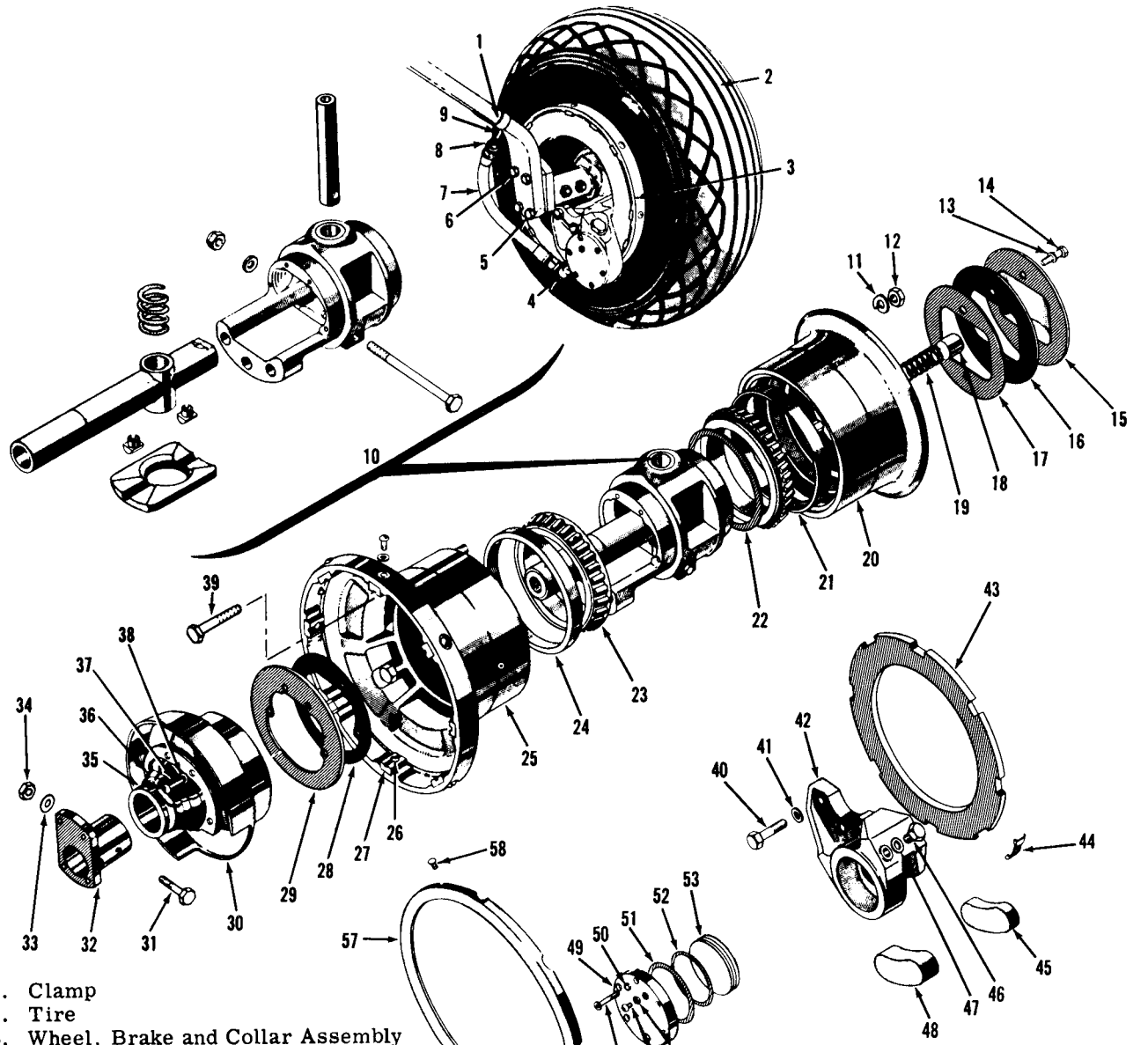

1. Clamp
2. Tire
3. Wheel, Brake and Collar Assembly
4. Elbow
5. Bolt
6. Bolt
7. Hose Assembly
8. Union
9. Brake Line
10. Hub and Axle Subassembly
11. Washer
12. Nut
13. Lockwasher
14. Bolt
15. Stabilizer Cap
16. Stabilizer Gasket
17. Stabilizer Tap Gasket Plate
18. Stabilizer Brake Lining
19. Stabilizer Brake Spring
20. Outboard Wheel Half
21. Bearing Cup
22. Pack Shim
23. Bearing Cone
24. Bearing Cup
25. Inboard Wheel Half
26. Key Retainer Screw
27. Disc Drive Key
28. Inboard Bearing Seal Plate
29. Bearing Seal Gasket
30. Deflector Left Plate
31. Bolt
32. Crosswind Wheel Axle Collar
33. Washer
34. Nut
35. Clamp
36. Axle Boot
37. Screw
38. Lockwasher
39. Bolt
40. Bolt
41. Washer
42. Brake Housing
43. Brake Disc
44. Anti-Rattle Clip
45. Brake Stationary Lining
46. Inlet Plug
47. Inlet Gasket
48. Brake Piston Side Lining
49. Brake Cylinder Head
50. Washer
51. Cylinder Head Seal
52. Piston Seal
53. Brake Piston
54. Bleeder Screw Seal
55. Bleeder Screw
56. Flathead Screw
57. Disc Retaining Ring
58. Stud Fastener

Figure 5-11. Crosswind Wheel

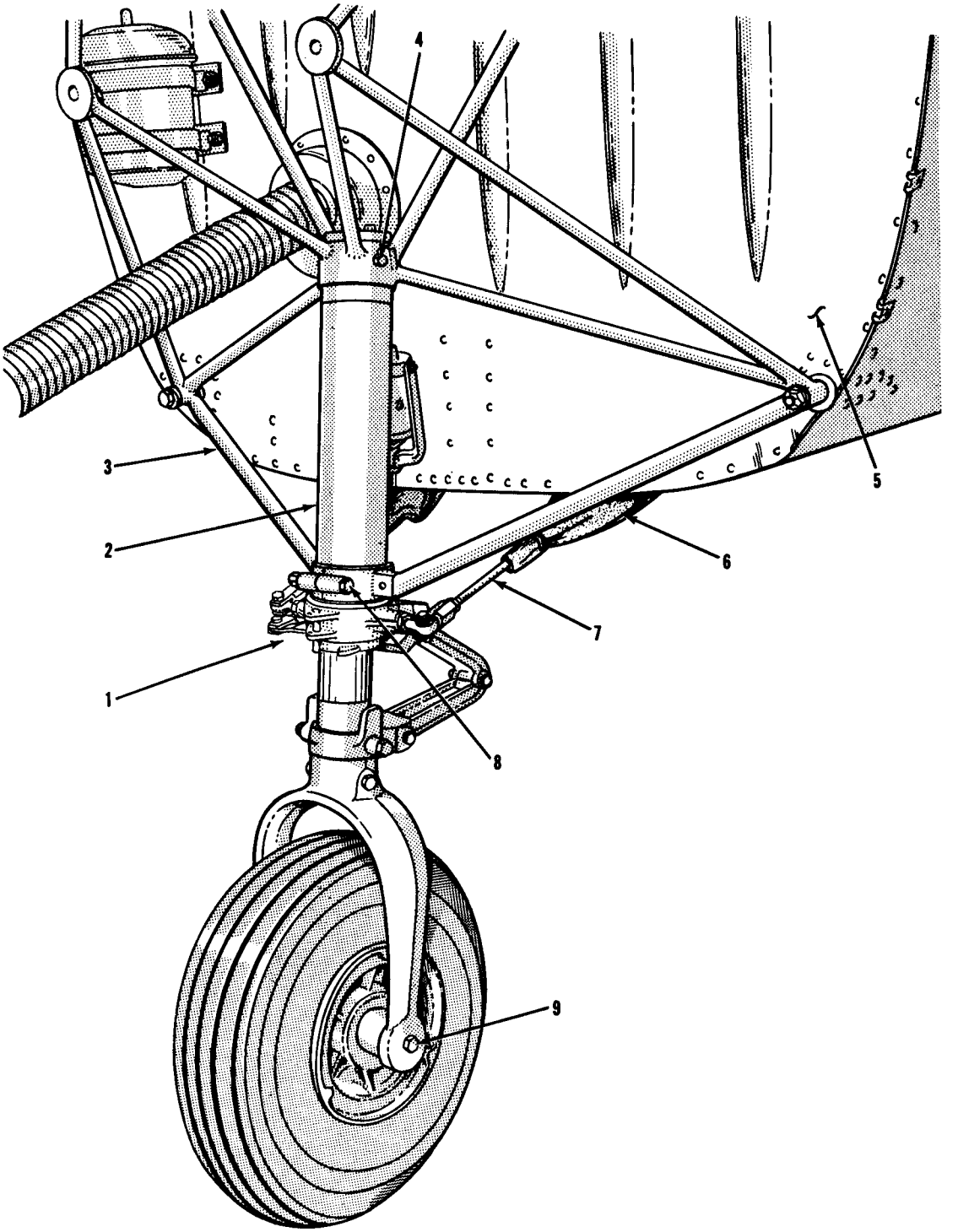

1. Shimmy Dampener Arm
2. Nose Gear Shock Strut
3. Engine Mount
4. Roll Pin
5. Firewall
6. Steering Tube Boot
7. Steering Tube
8. Bolt
9. Axle Bolt

Figure 5-12. Nose Gear — Model 150

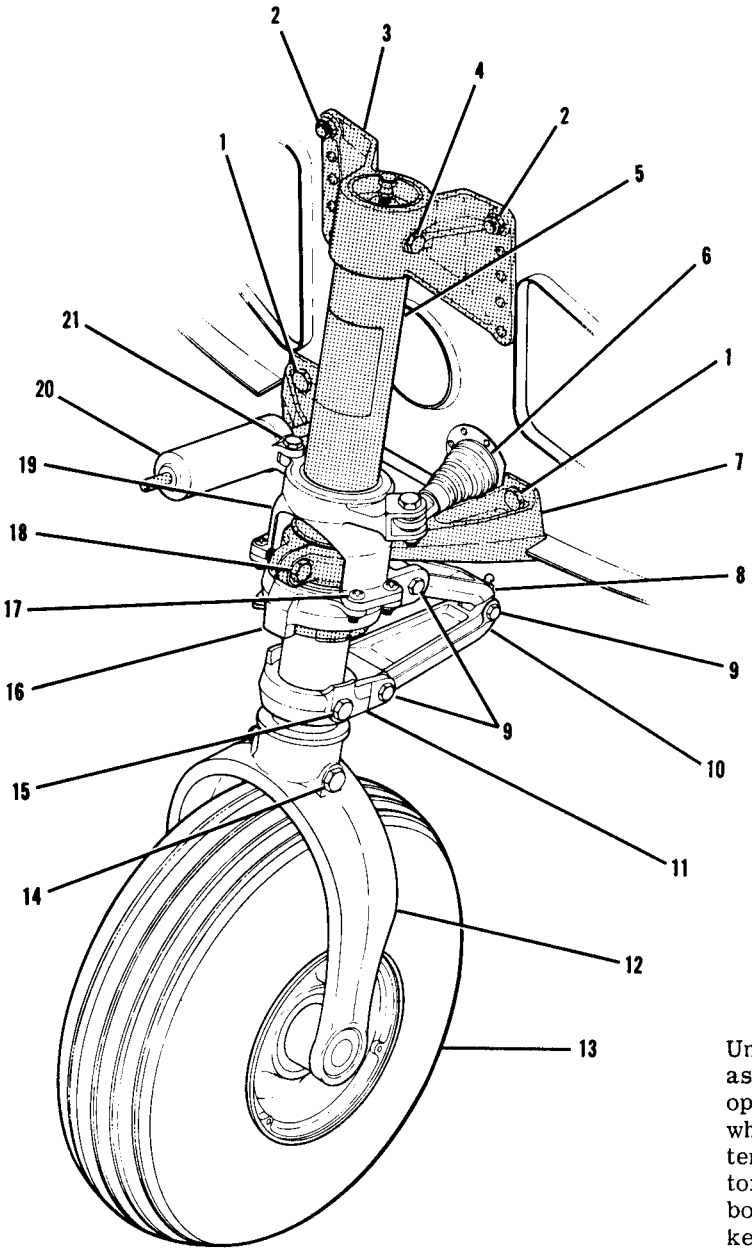

NOTE

Unshaded parts of the nose gear turn as the nose gear steering system is operated on the ground, but do not turn while airborne. As the lower strut extends, a centering block on the upper torque link contacts a flat spot on the bottom end of the upper strut, thus keeping the lower strut and wheel from turning.

1. Bolt
2. Nut
3. Upper Forging
4. Bolt
5. Upper Strut
6. Steering Bungee
7. Lower Forging
8. Upper Torque Link
9. Bolt
10. Lower Torque Link
11. Torque Link Fitting
12. Nose Gear Fork
13. Wheel and Tire
14. Bolt
15. Bolt
16. Steering Collar
17. Screw
18. Bolt
19. Steering Torque Arm
20. Shimmy Dampener
21. Bolt

Figure 5-13A. Nose Gear (Model 182, 1962 & on)

SHOP NOTES:

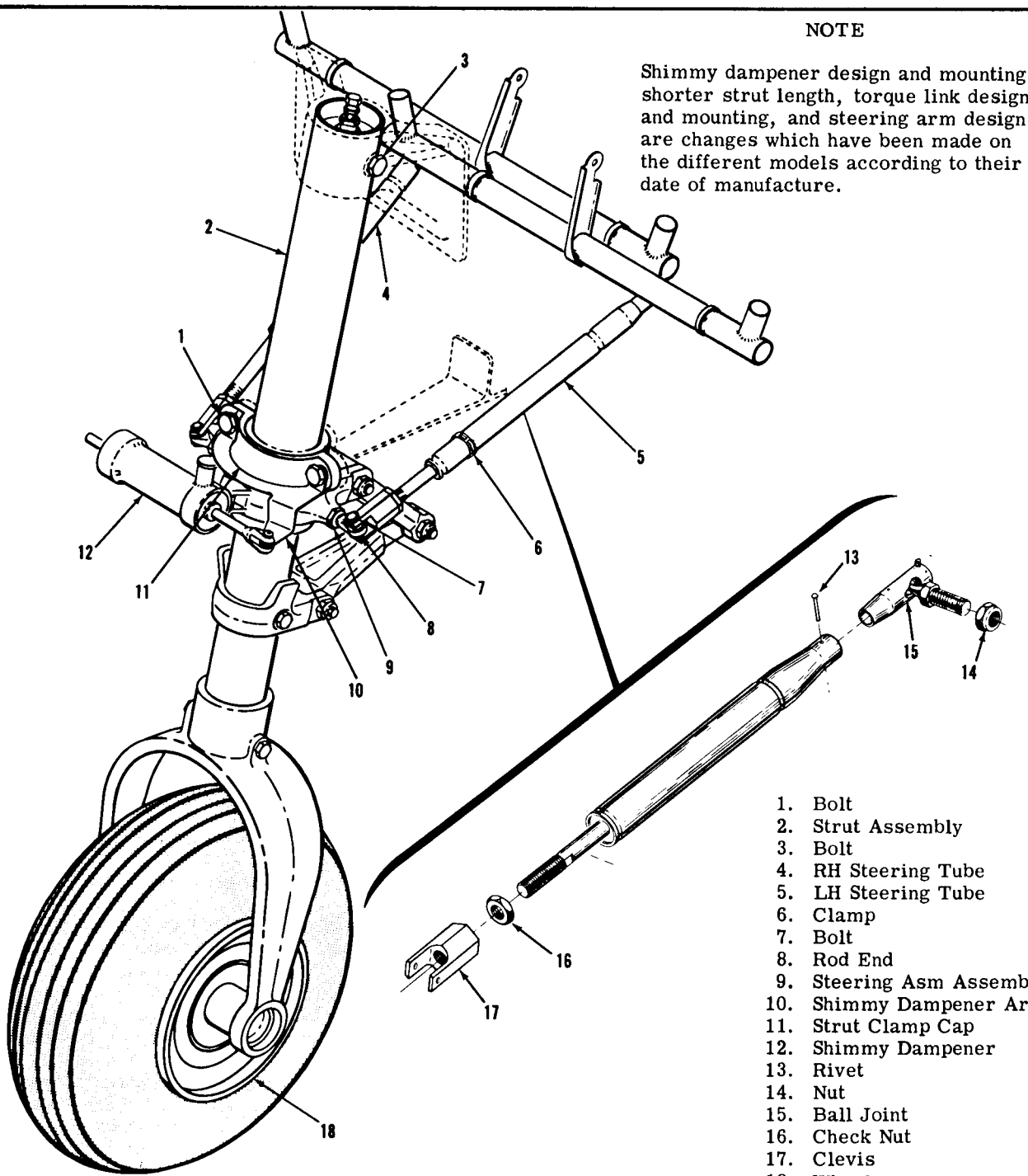

NOTE

Shimmy dampener design and mounting, shorter strut length, torque link design and mounting, and steering arm design are changes which have been made on the different models according to their date of manufacture.

1. Bolt
2. Strut Assembly
3. Bolt
4. RH Steering Tube
5. LH Steering Tube
6. Clamp
7. Bolt
8. Rod End
9. Steering Asm Assembly
10. Shimmy Dampener Arm
11. Strut Clamp Cap
12. Shimmy Dampener
13. Rivet
14. Nut
15. Ball Joint
16. Check Nut
17. Clevis
18. Wheel

CAUTION

When installing cap (11), check the gap between the cap and the strut fitting before the attaching bolts are tightened. Gap tolerance is .010" minimum and .016" maximum. If gap exceeds maximum tolerance, install shims, Part No. 0543042-1 (.016") and Part No. 0543042-2 (.032"), as required to obtain gap tolerance. Replace the cap if gap is less than minimum, again using the shims to obtain proper gap. Install shims as equally as possible between sides.

Figure 5-13. Typical Nose Gear - Except Model 182(1962 & on) and Model 150

3. Pull the strut assembly down, out of the upper forging to remove.

g. To install the nose gear, reverse the above procedure. Always tighten the upper attachment before clamping the strut in the lower support to prevent misalignment.

5-32. DISASSEMBLY OF NOSE GEAR STRUT. Various changes have been made in the design of nose gear struts used on the different models, although the same general configuration is used. This paragraph outlines complete disassembly of the nose gear strut. In many cases, separating the upper and lower struts will permit inspection and parts replacement without complete strut disassembly. One major change (the elimination of the torque link fitting on some struts) requires a different disassembly procedure.

NOTE

The following procedure applies to nose struts with torque link fittings, illustrated in figure 5-14.

WARNING

Be sure strut is deflated completely before disconnecting torque links or removing bolt (24) securing metering pin base plug inside the strut.

a. Disconnect lower torque link from torque link fitting (23) by removing attaching bolt. Note position of any washers and spacers. Remove shimmy dampener.

NOTE

On the 182 (1962 and on), remove steering torque arm and lower forging (19 and 7, figure 5-13A) if these parts were not previously removed.

b. Remove lock ring (21) from groove inside lower end of upper strut (7). A small hole is provided at the lock ring groove to facilitate removal of the lock ring.

c. Use a straight, sharp pull to separate the upper and lower struts.

d. Remove lock ring (4) and bearing (5) from lower strut.

e. Slide packing support ring (13), scraper ring (14), retaining ring (15), and lock ring (21) from lower strut, noting the top side of each part to aid in assembly later.

NOTE

On some airplanes, the extend stop is a spacer located above packing support ring (13). Remove this spacer before removing the packing support ring.

f. Remove bolt (24) and slide torque link fitting (23) up, off lower strut. Some airplanes have spacers on bolt (24) to provide for tow bar attachment.

NOTE

Bolt (24) also holds metering pin base plug (19) in place.

g. Pull base plug (19) and assembled parts out of lower strut. Disassemble O-rings and metering pin from base plug as required.

h. Pull upper support assembly out of upper strut. Remove screws (3) to disassemble orifice piston support tube from the assembly. On later struts, these parts are brazed together.

i. Remove retaining ring (8), then slide steering arm assembly (9) up, off upper strut. Remove washer (10) and teflon shims if present.

NOTE

The following procedure applies to nose struts without torque link fittings, illustrated in figure 5-15.

WARNING

Be sure strut is deflated completely before disconnecting torque links or removing bolt (26) securing metering pin base plug inside the strut.

j. Disconnect lower torque link from nose gear fork (25) by removing attaching bolt. Note position of any washers and spacers. Remove shimmy dampener.

k. Remove lock ring (21) from groove inside lower end of upper strut (7). A small hole is provided at the lock ring groove to facilitate removal of the lock ring.

l. Use a straight, sharp pull to separate the upper and lower struts.

m. Remove lock ring (4) and bearing (5) from lower strut.

n. Slide packing support ring (13), scraper ring (14), retaining ring (15), and lock ring (21) from lower strut, noting the top side of each part to aid in assembly later.

o. Remove bolt (26) and pull base plug (19) and assembled parts out of lower strut. Disassemble O-rings and metering pin from base plug as required.

p. Pull upper support assembly out of upper strut.

q. Remove retaining ring (8), then slide steering arm assembly (9) up, off upper strut. Remove washer (10) and teflon shims if present.

5-33. ASSEMBLY OF NOSE GEAR STRUT.

NOTE

The following procedure applies to nose struts without torque link fittings, illustrated in figure 5-15.

a. Clean and check needle bearings in steering arm assembly (9) and pack with MIL-L-7711 grease. Slide washer (10), teflon shims (if required to eliminate excessive clearance), and the steering arm assembly down in position on strut (7) and secure with retaining ring (8). If the needle bearings are defective, the entire steering arm assembly should be re-

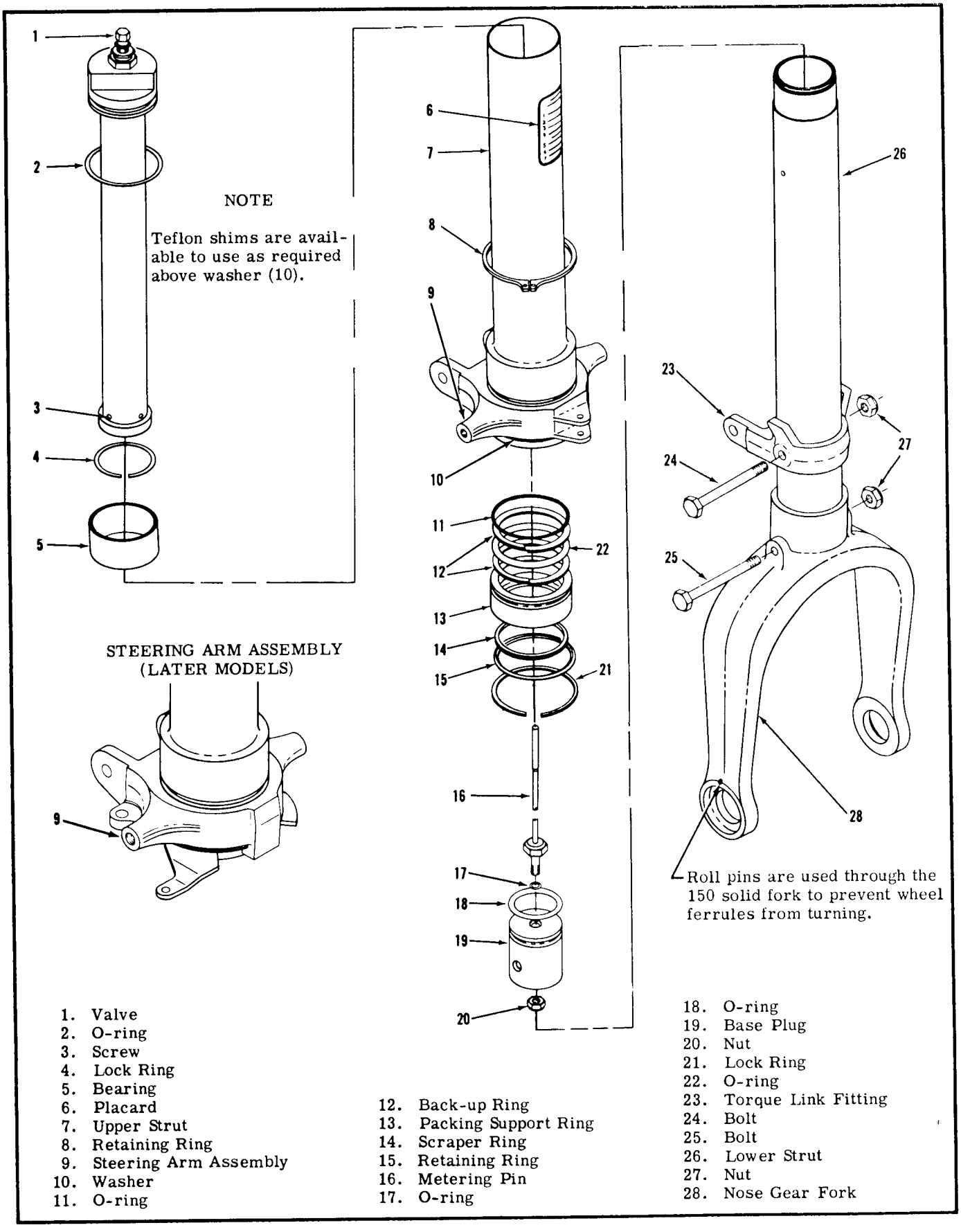

Figure 5-14. Nose Gear Strut with Torque Link Fitting (Except 182, 1962 & on)

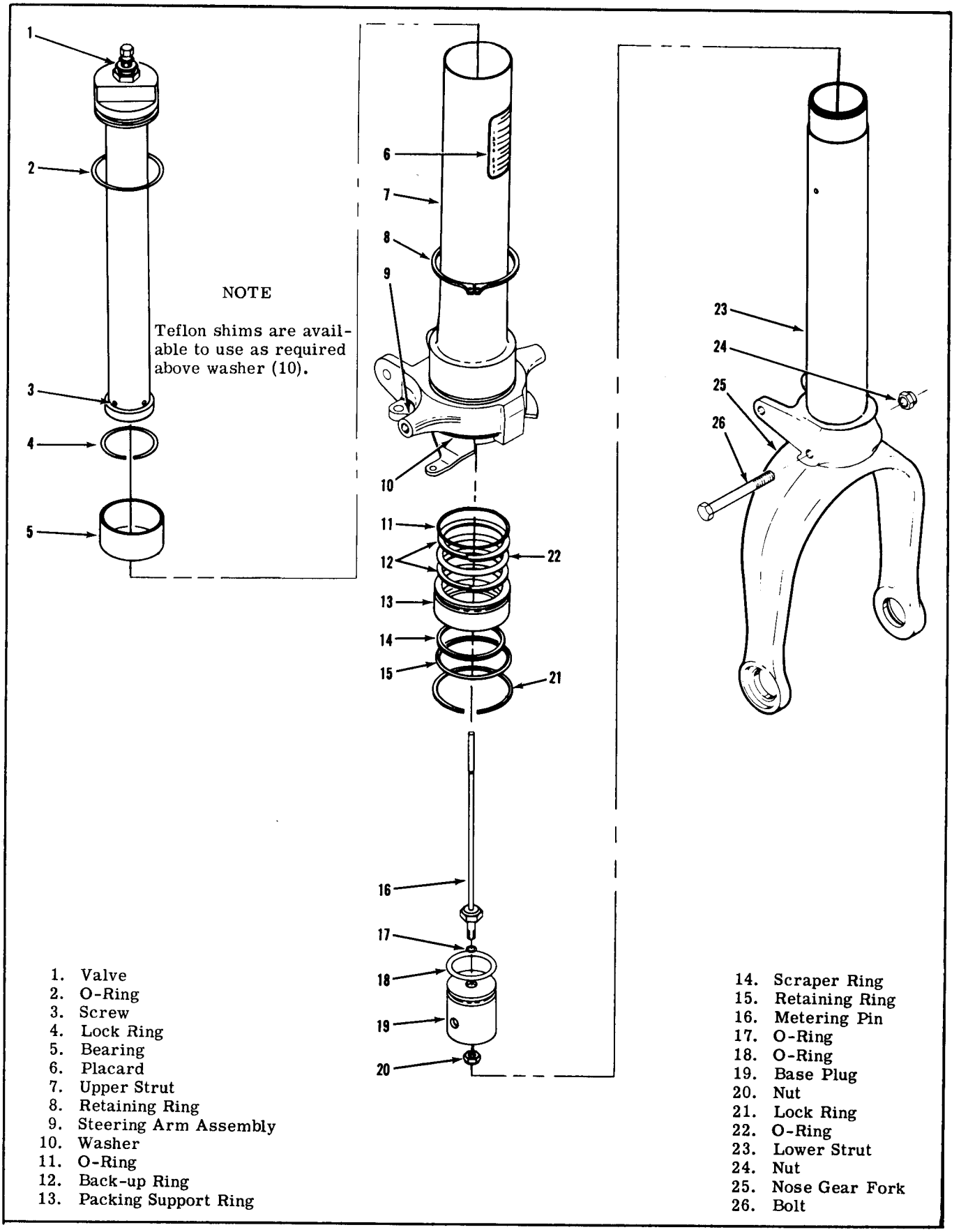

Figure 5-15. Nose Gear Strut without Torque Link Fitting

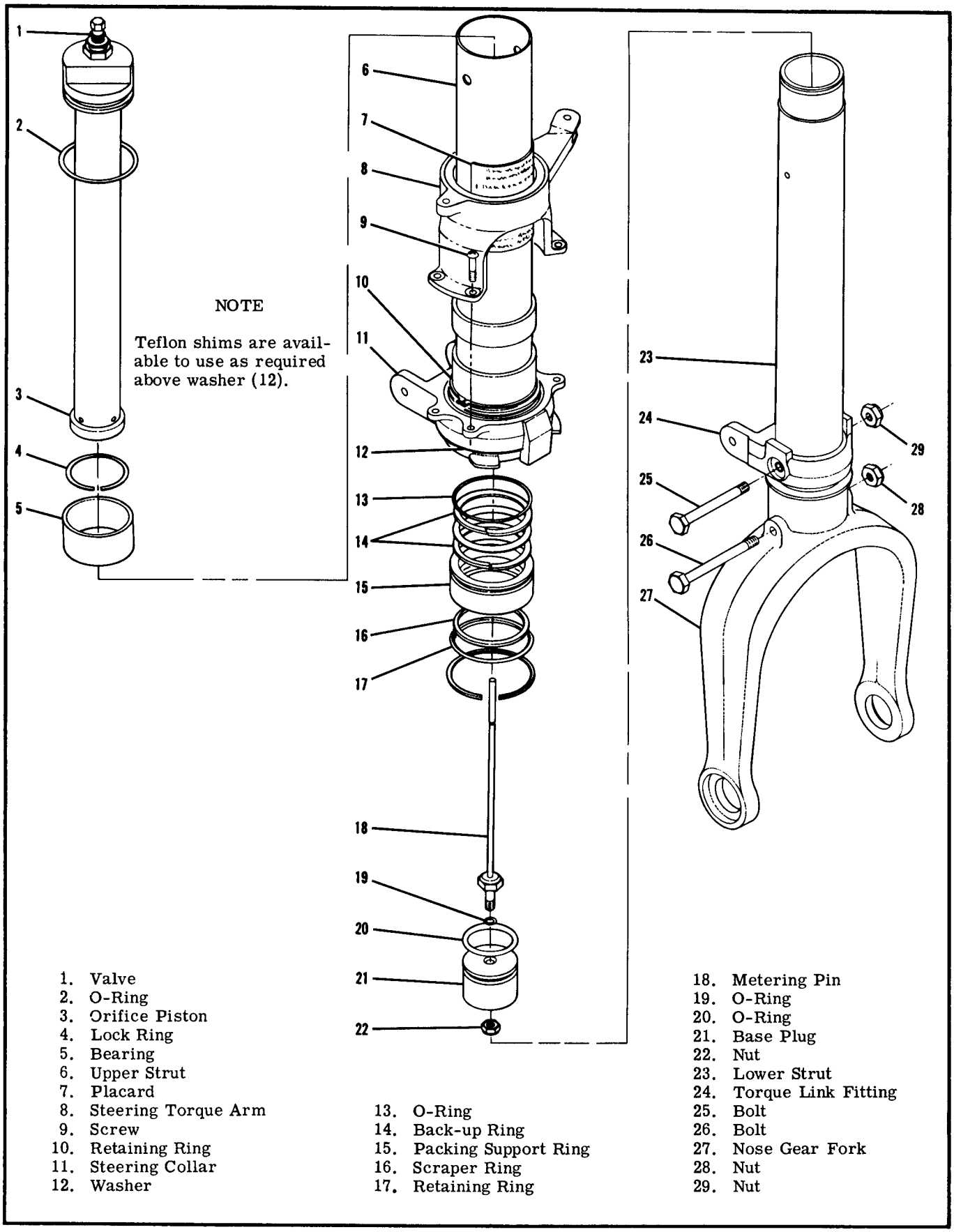

Figure 5-15A. Nose Gear Strut (Model 182, 1962 & on)

placed.

b. Install a new O-ring (2) on the upper support assembly and insert the assembly into upper strut (7). Align mounting holes and temporarily install a 5/16 bolt or pin to hold the support in position until the strut is installed in the airplane.

c. Using new O-rings, assemble metering pin (16) and base plug (19), then slide the assembly inside lower strut (23), align holes, and install bolt (26). Be sure to install the tow-bar spacers and nose wheel speed fairing or speed fairing plate, if used.

d. Slide lock ring (21), retaining ring (15), and scraper ring (14) in position on lower strut (23).

e. Assemble packing support ring (13) by installing O-ring (22) with one back-up ring (12) on each side of the O-ring. These are installed in the groove inside the packing support ring. Install O-ring (11) on the outside of the packing support ring and slide the assembled packing support ring in position on the lower strut.

f. Install bearing (5) and lock ring (4) on the top of lower strut (23).

g. Dampen all strut parts with plenty of clean hydraulic fluid to serve as a lubricant and slide lower strut into upper strut, using care not to damage seals. Slide all loose parts up inside the upper strut and secure with lock ring (21). Install the lock ring so one of its ends covers the small access hole, to make removal of the lock ring easier.

h. Install torque links and shimmy dampener. Where a speed fairing with a removable plate is used, the bolt attaching the torque link, or the one attaching the fork, also secures the removable plate.

i. Service shock strut after installation.

NOTE

The following procedure applies to nose struts with torque link fittings, illustrated in figure 5-14.

j. Clean and check needle bearings in steering arm assembly (9) and pack with MIL-L-7711 grease. Slide washer (10), teflon shims (if required to eliminate excessive clearance), and the steering arm assembly down in position on strut (7) and secure with retaining ring (8). If the needle bearings are defective, the entire steering arm assembly should be replaced. The 182 (1962 and on) has two needle bearings in this area, one in steering collar (11, figure 5-15A) and one in steering torque arm (8, figure 5-15A). On this airplane, the lower strut-to-fuselage forging must be in place before the steering torque arm is installed. If the lower forging was left on the fuselage, the steering torque arm must be positioned on the strut after the strut is inserted through the lower forging and before it is inserted into the upper forging.

k. Assemble orifice piston to the support tube with screws (3). On later struts, these parts are brazed together.

l. Install a new O-ring (2) on the upper support assembly and insert the assembly into upper strut (7). Align mounting holes and temporarily install a 5/16 bolt or pin (3/8 on later Model 150 struts) to hold the support in position until the strut is installed on the airplane.

m. Using new O-rings, assemble metering pin (16) and base plug (19), then slide the assembly inside lower strut (26). Slide torque link fitting (23) in position. Align mounting holes in the torque link fitting, lower strut, and base plug (19), then install bolt (24).

NOTE

If the early nose wheel speed fairing which is attached with bolt (24) is used, it must be positioned before installing torque link fitting (23). Likewise, install any tow-bar spacers that were removed.

n. Slide lock-ring (21), retaining ring (15), and scraper ring (14) in position on lower strut (26).

o. Assemble packing support ring (13) by installing O-ring (22) with one back-up ring (12) on each side of the O-ring. These are installed in the groove inside the packing support ring. Install O-ring (11) on the outside of the packing support ring and slide the assembled packing support ring in position on the lower strut. On those struts using an extend stop spacer, slide it in position next.

p. Install bearing (5) and lock ring (4) on the top of lower strut (26).

q. Dampen all strut parts with plenty of clean hydraulic fluid to serve as a lubricant and slide lower strut into upper strut, using care not to damage seals. Slide all loose parts up inside the upper strut and secure with lock ring (21). Install the lock ring so one of its ends covers the small access hole, to make removal of the lock ring easier.

r. Install torque links and shimmy dampener. Where a speed fairing with a removable plate is used, the bolt attaching the torque link, or the one attaching the fork, also secures the removable plate.

s. Service shock strut after installation.

NOTE

Packing support rings with different width inner grooves and various seals have been used in the strut. On packing support rings with the wide groove, install a contoured rubber back-up ring above and below the O-ring. If strut is equipped with a packing support ring having the narrow groove, install one contoured rubber back-up ring below the O-ring. If any struts are found with Teflon or leather back-up rings installed in the packing support ring inner groove, replace with the contoured back-up rings above and below the O-ring.

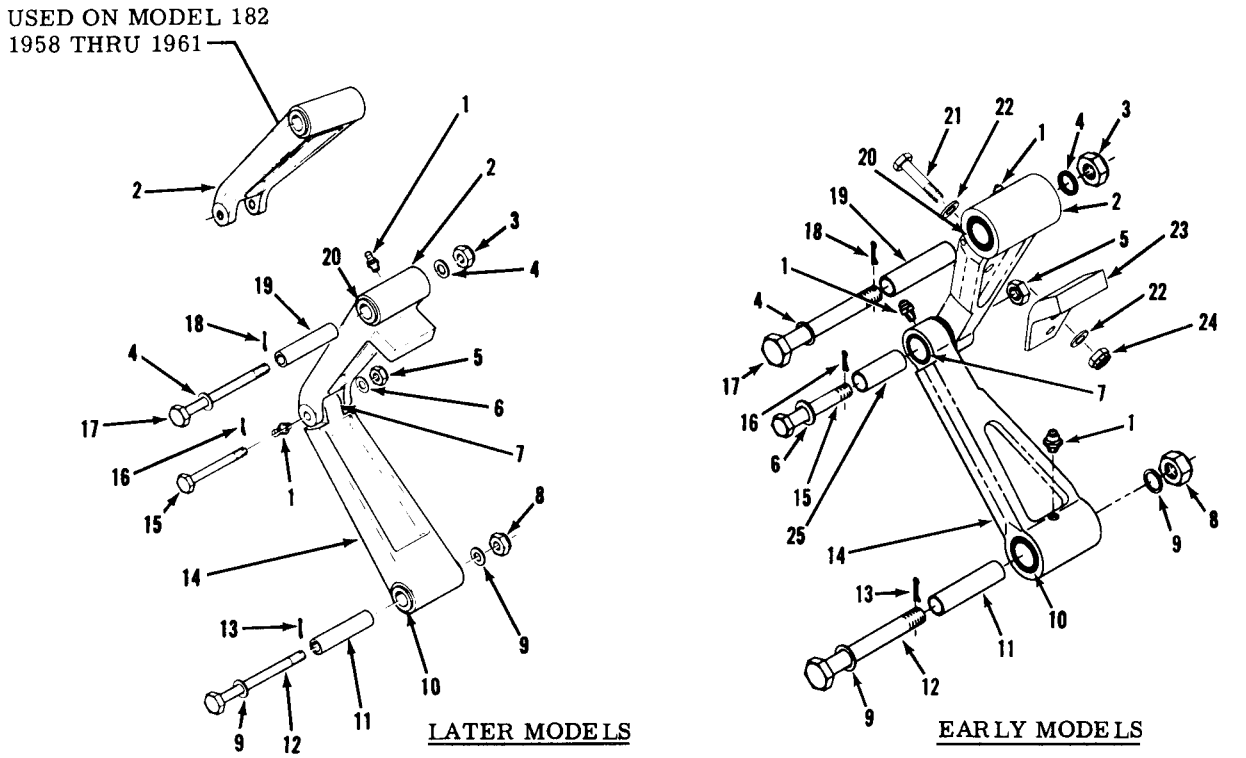

1. Grease Fitting
2. Upper Torque Link
3. Nut
4. Washer
5. Nut
6. Washer
7. Bushing
8. Nut
9. Washer
10. Bushing
11. Spacer
12. Bolt
13. Cotter Pin
14. Lower Torque Link
15. Bolt
16. Cotter Pin
17. Bolt
18. Cotter Pin
19. Spacer
20. Bushing
21. Bolt
22. Washer
23. Extend Stop
24. Nut
25. Spacer

Figure 5-16. Torque Links

SHOP NOTES:

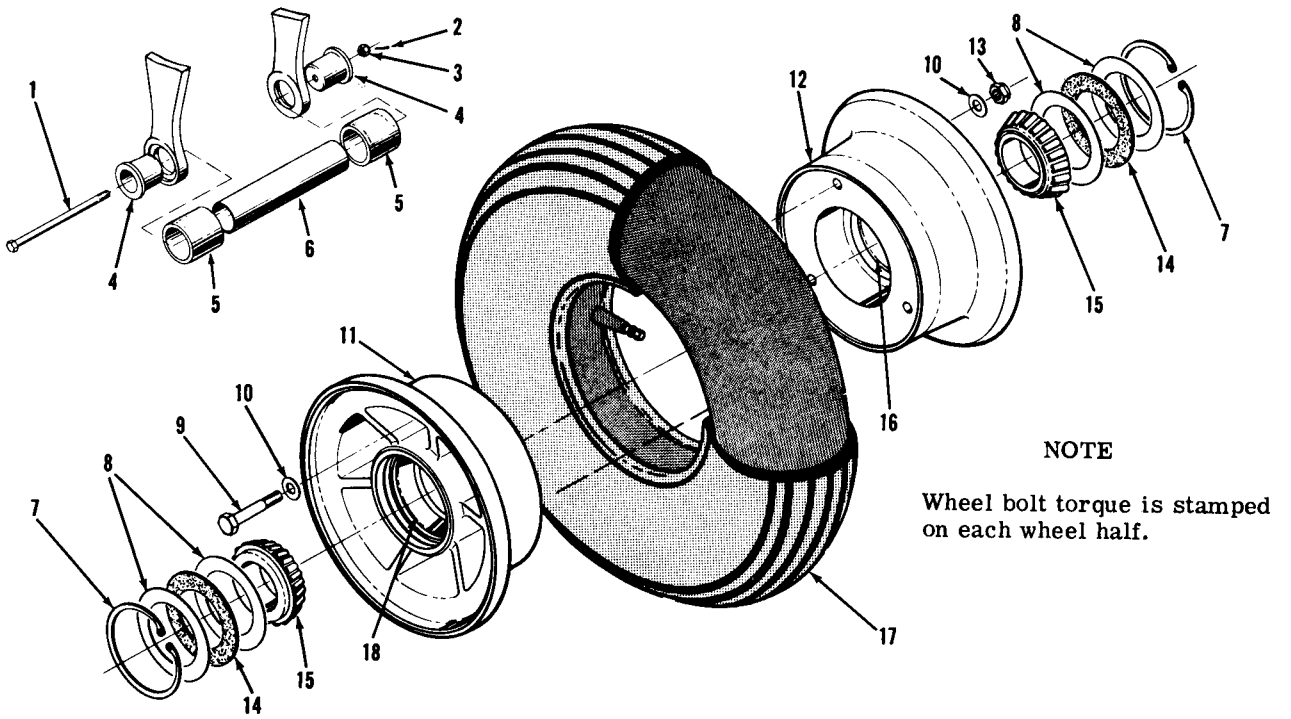

NOTE

Wheel bolt torque is stamped on each wheel half.

1. Bolt
2. Cotter Pin
3. Nut
4. Axle Bolt Bucket
5. Axle Spacer
6. Axle Tube
7. Retaining Ring
8. Ring
9. Bolt
10. Washer
11. Wheel Half
12. Wheel Half
13. Nut
14. Felt Seal
15. Bearing Cone
16. Bearing Cup
17. Tire
18. Bearing Cup

Figure 5-17. Goodyear Nose Wheel (Tube Type Tire)

5-34. NOSE WHEEL.

5-35. Goodyear or Cleveland 5.00 x 5 nose wheels may be used interchangeably on all Cessna single-engine aircraft. Although tubeless tires have been used on production aircraft since 1959, nose wheels may be modified to use tires and tubes. Either a Goodyear or Cleveland, tubeless or tube-type wheel may be found on the nose gear.

5-36. REPLACEMENT. (See figure 5-17.)

a. Depress and tie down or weight the tail of the airplane to raise the nose wheel off the ground.

b. Remove the nose wheel axle bolt.

c. Use a rod or long punch inserted in bucket (4) or ferrule to tap the opposite bucket or ferrule out of the fork. Remove both buckets and pull the nose wheel from the fork.

NOTE

Buckets (4) are used on aircraft without speed fairings. With speed fairings the solid ferrules are used. On the Model 150, the ferrules need not be removed prior to wheel removal. When speed fairings are installed, the nose wheel speed fairing can be flexed far enough to permit removal of the ferrules; if need be, the scraper may be disconnected for more flexibility.

d. Remove spacers (5) and axle tube (6) before disassembling the nose wheel.

e. Reverse the preceding steps to install the nose wheel. Tighten the axle bolt until a slight bearing drag is obvious when the wheel is turned. Back off the nut to the nearest castellation and install the cotter pin. On the 150, position the ferrules so the slots in the ferrules engage the roll pins in the fork.

NOTE

If a different tire was installed or the speed fairing scraper adjustment disturbed, set the scraper clearance at .19 to .31 inch.

5-37. DISASSEMBLY.

a. Completely deflate the tire. Remove valve core in tube-type tires; insert filler needle in tubeless tires to release pressure. Break tire beads loose.

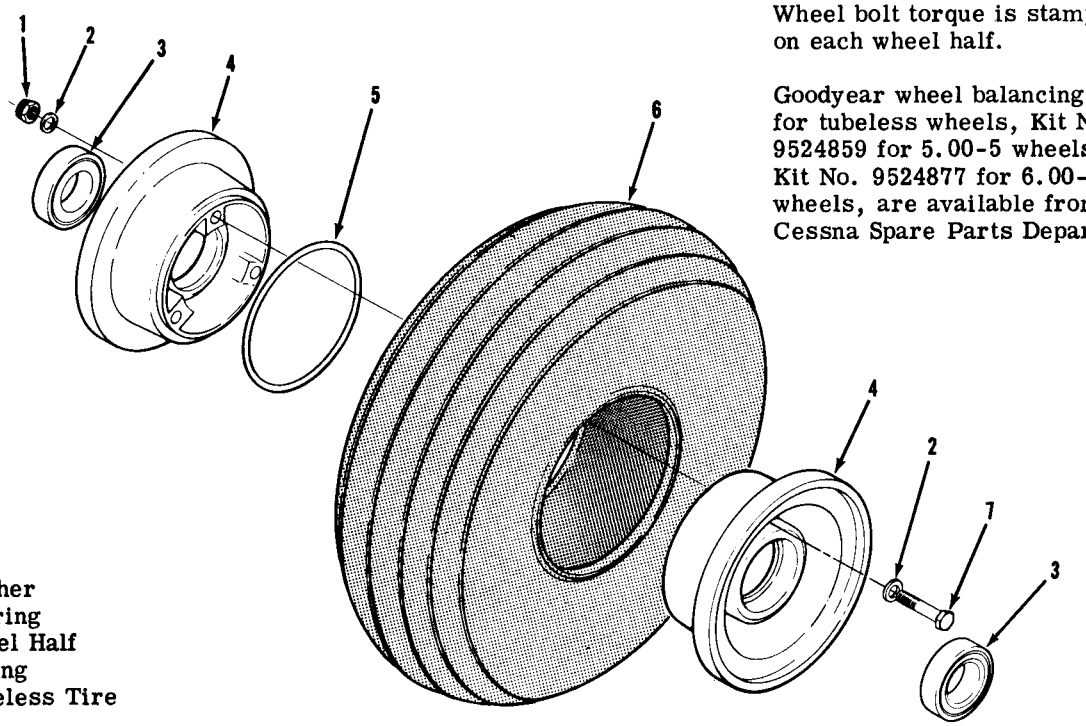

Note

Wheel bolt torque is stamped on each wheel half.

Goodyear wheel balancing kits for tubeless wheels, Kit No. 9524859 for 5.00-5 wheels and Kit No. 9524877 for 6.00-6 wheels, are available from the Cessna Spare Parts Department.

1. Nut
2. Washer
3. Bearing
4. Wheel Half
5. O-ring
6. Tubeless Tire
7. Bolt

Figure 5-18. Goodyear Nose Wheel (Tubeless Tire)

WARNING

Injury can result from attempting to separate wheel halves with tire inflated. Avoid damaging wheel flanges when breaking tire beads loose.

b. Remove thru-bolts and separate wheel halves.
c. Remove tire and tube. With tubeless tires, remove O-ring placed between wheel halves to seal them against leakage.
d. Remove bearing retaining rings, grease seals, and bearing cones. Various types have been used according to the model and date of manufacture.

NOTE

The bearing cups are a press fit in the wheel halves and should not be removed unless replacement is necessary. To remove, heat the wheel half in boiling water for 15 minutes. Using an arbor press, if available, press out the bearing cup and press in the new one while the wheel is still hot.

5-38. INSPECTION AND REPAIR. Instructions given in paragraph 5-14 for the main wheels may be used as a guide for inspection and repair of the nose wheels.

5-39. ASSEMBLY.
a. On tube-type tires, insert tube in tire, aligning yellow stripe on tube with red dot on tire. Place tire on wheel half and position valve stem through valve hole. Insert thru-bolts, position other wheel half, and secure with nuts and washers. Take care to avoid pinching tube between wheel halves. Torque to value marked on wheel.
b. On tubeless tires, insert thru-bolts through one wheel half and place tire in position. Inspect the O-ring groove on both wheel halves to assure a smooth, clean surface. Dirt or chips under the O-ring will cause an air leak. Wipe the O-ring with clean bearing grease and center in the O-ring groove. Place the other wheel half in position. Apply a light force to bring the wheel halves together; if the wheel halves do not bottom solidly together, the O-ring is not placed properly. Maintaining the light force, assemble a washer and nut on one thru-bolt and tighten snugly. Assemble the remaining nuts and washers on the thru-bolts and torque to the value marked on the wheel.

CAUTION

Uneven or improper torque of the thru-bolt nuts may cause bolt failure with resultant wheel failure.

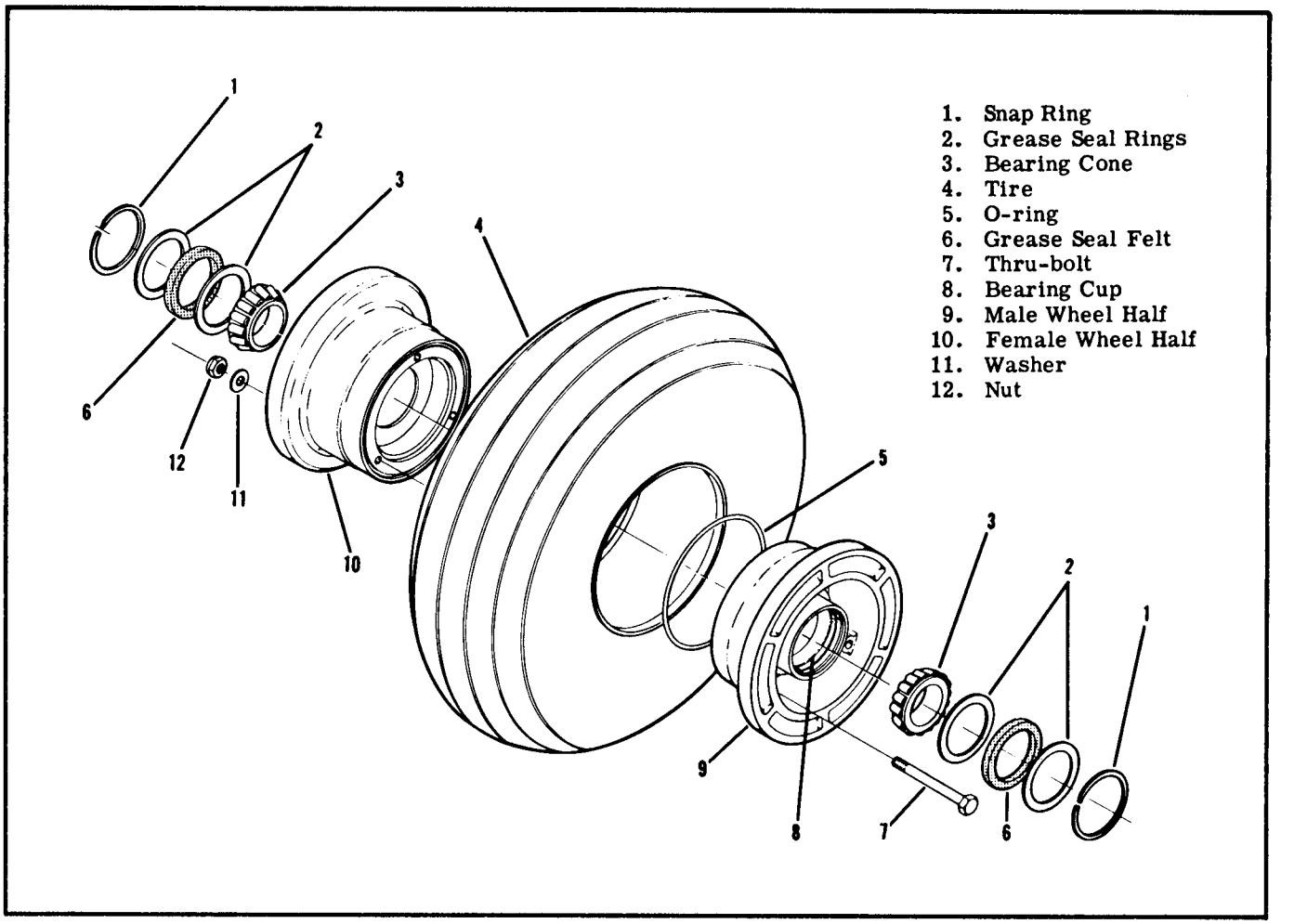

Figure 5-19. Cleveland Nose Wheel

c. Clean and repack bearing cones with clean wheel bearing grease.
d. Assemble bearing cones, seals, and retainers into the wheel half.

NOTE

Various bearings, seals, and retainers have been used among the different models, according to their date of manufacture.

e. Inflate tire to seat tire beads, then adjust to correct pressure.

NOTE

A tire expander to facilitate tubeless tire installation is available from the Cessna Spare Parts Department.

5-40. INFLATING AND BALANCING THE NOSE WHEEL.

NOTE

The following information applies to Goodyear tube-type wheel assemblies. Balancing kits for Goodyear tubeless wheel assemblies, Kit No. 9524859 for 5.00 - 5 wheels and Kit No. 9524877 for 6.00 - 6 wheels, are available from the Cessna Spare Parts Department.

Nose wheel components are balanced by the manufacturer and marked with a yellow stripe on the tube which should be aligned with a red dot on the tire sidewall. Where a better balance is required, small balance weights may be added to the wheel flange. Balance the nose wheel as follows:
a. Remove any flange balance weights before mounting a new tire.
b. Install inner tube in tire with yellow stripe on tube aligned with red dot on tire.
c. Assemble wheel halves over tire and tube and torque thru-bolts to value marked on wheel.
d. Inflate to seat tire beads, then adjust to correct pressure.

NOTE

The wheel should now be within the manufacturer's balancing tolerance; to achieve a better balance, proceed with the following steps.

e. Check the inflated nose wheel for balance and correct minor unbalance by deflating and rotating

the tire. Avoid damaging the valve stem or inner tube when rotating the tire.

f. If wheel is still unbalanced:
   1. Check for light spot and mark.
   2. Deflate tire and install the strap of the weight between the tire bead and the wheel flange at the marked location.
   3. Bend the weight strap around the flange so that the weight fits tightly against the flange.
   4. Reinflate tire to correct pressure.

NOTE

Goodyear supplies the following balance weights: 1/2 ounce balance weight, Part No. 9523948; 1 ounce balance weight, Part No. 9523947.

NOTE

Goodyear, in the manufacture of the nose wheel, puts a valve hole opening in both wheel halves to make them interchangeable. However, under certain conditions, dust can enter through the opening in the wheel half not using the valve stem and settle on the axle and bearings, causing rapid wear. Goodyear has a caplug, which is to be inserted in the open hole, and a rubber grommet or tubing to fit over the valve stem. These two items seal the wheel halves and prevent foreign material from entering.

SHOP NOTES:

5-41. NOSE WHEEL STEERING SYSTEM.

5-42. Nose wheel steering is accomplished through use of the rudder pedals. On all models except the 182 (1962 and on), two spring-loaded push-pull tubes connect the rudder bars to the nose gear. On the 182 (1962 and on), a steering bungee links the nose gear to a bellcrank which is operated by push-pull rods connected to the rudder bars. Steering is afforded up to approximately 10° each side of neutral, after which brakes may be used to gain a maximum deflection of 30° right or left of center. Flexible boots seal the fuselage entrance of the steering tubes or bungee. A sprocket-operated screw mechanism to provide rudder trim on the 182 (1962 and on) is incorporated at the aft end of the bungee. The trim system is discussed in Section 10.

5-43. STEERING TUBE AND BUNGEE ASSEMBLIES are spring-loaded and should not be disassembled internally. The steering tubes are connected by clevises to rod ends extending from the steering arm assembly on the nose gear and by a ball joint connection at the rudder pedal crossbars. The steering bungee is connected to the steering torque arm by a bearing end assembly and to the steering bellcrank by a rod end.

5-44. ADJUSTMENT OF NOSE WHEEL STEERING. Since the nose wheel steering system, rudder system, and rudder trim system are interconnected, adjustments to one system may affect the others. Section 10 contains rigging instructions for the nose wheel steering system as well as the rudder and rudder trim systems.

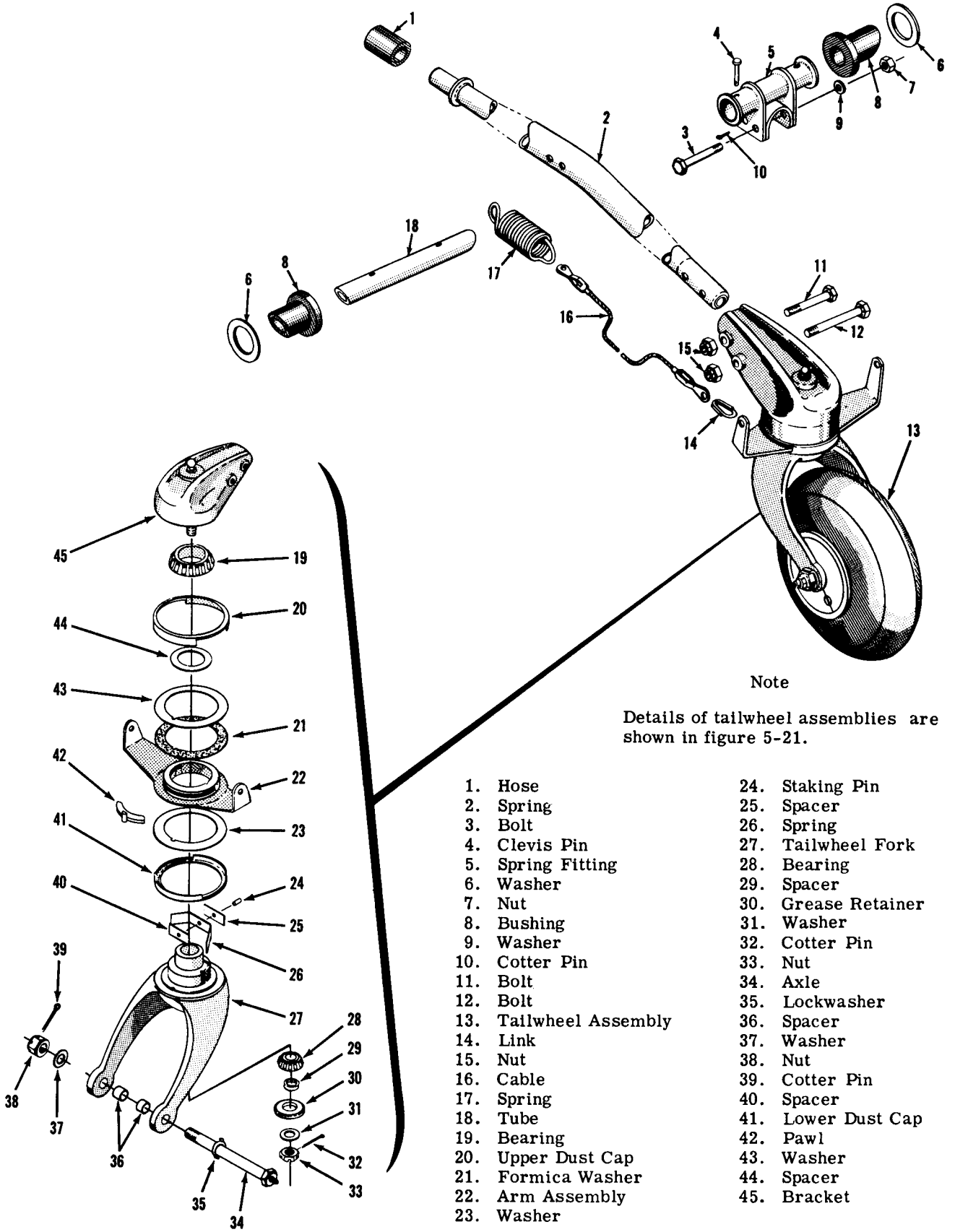

Note

Details of tailwheel assemblies are shown in figure 5-21.

1. Hose
2. Spring
3. Bolt
4. Clevis Pin
5. Spring Fitting
6. Washer
7. Nut
8. Bushing
9. Washer
10. Cotter Pin
11. Bolt
12. Bolt
13. Tailwheel Assembly
14. Link
15. Nut
16. Cable
17. Spring
18. Tube
19. Bearing
20. Upper Dust Cap
21. Formica Washer
22. Arm Assembly
23. Washer
24. Staking Pin
25. Spacer
26. Spring
27. Tailwheel Fork
28. Bearing
29. Spacer
30. Grease Retainer
31. Washer
32. Cotter Pin
33. Nut
34. Axle
35. Lockwasher
36. Spacer
37. Washer
38. Nut
39. Cotter Pin
40. Spacer
41. Lower Dust Cap
42. Pawl
43. Washer
44. Spacer
45. Bracket

Figure 5-20. Tail Gear

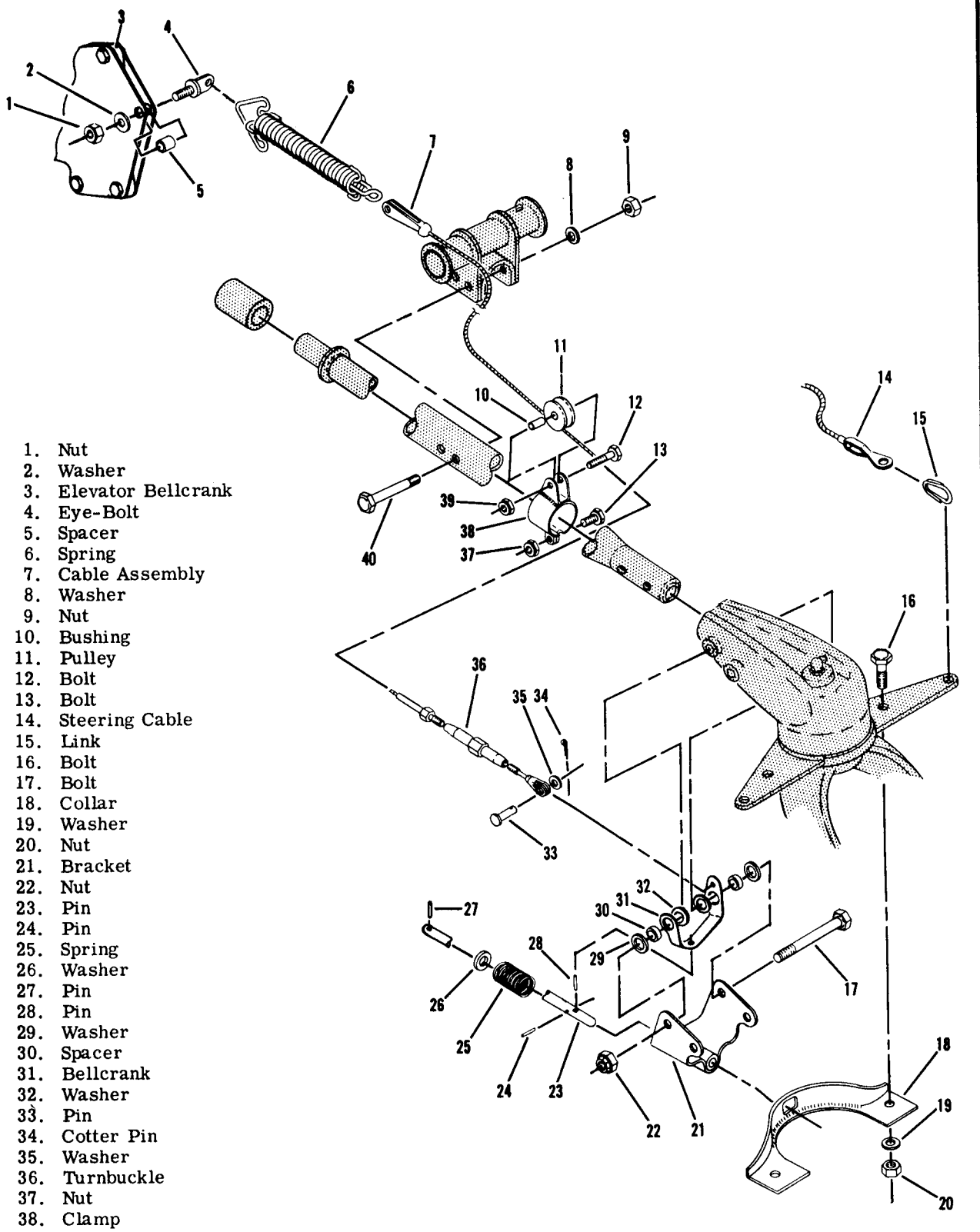

Figure 5-20A. Model 185 Tailwheel Anti-Swivel Mechanism

5-45. TAIL GEAR.

5-46. A steerable tailwheel, mounted in a tapered tubular spring strut, comprises the Models 180 and 185 tail gear. The tubular spring strut is mounted in rubber bushings to cushion vibration. The tail wheel is steerable, in response to rudder pedal actuation, through an arc of 24° each side of neutral and is free-swiveling beyond this travel. The tailwheel itself on early Model 180 airplanes is a Goodyear wheel assembly. During 1953, the tailwheel was changed to a Goodrich wheel assembly, which is the current one used. Both of these are size 8" S. C. assemblies. The Model 185 is equipped with a Scott 10" wheel assembly.

5-47. REPLACEMENT. (See figure 5-20.)
a. Place a suitable padded stand under aft fuselage to raise the tail gear off the ground.
b. Disconnect the steering cables from the tailwheel.
c. Remove the fuselage stinger.
d. Remove cotter pins (10) and clevis pins (4) securing tube (18) to spring fitting (5). Tap the tube out of the spring fitting and pull spring (2) aft, out of hose (1) which is cemented in a mounting structure in the fuselage.
e. Replace hose (1) and bushings (8) if deteriorated, inspect and replace spring and attaching parts as required.
f. Reverse the above steps to install the tail gear.

5-47A. MODEL 185 TAILWHEEL ANTI-SWIVEL MECHANISM. (See figure 5-20A.)

5-47B. The Model 185 is equipped with a tailwheel anti-swivel mechanism. This mechanism consists of a spring-loaded locking pin, connected by a cable and spring to the elevator bellcrank, which locks the tailwheel when the elevator is 15° or more up. When the tailwheel is locked, it is still steerable 5° each side of center. Complete steering and full swiveling are immediately available by merely lowering the elevator below the 15° up position, as the locking pin is spring-loaded to the disengaged position.

NOTE

Accessory Kits and Service Kits are available to install an improved elevator operated tailwheel locking system, or to install the newer manually operated system, on all Model 185 aircraft. See Service Letter 63-28.

5-47C. REPLACEMENT AND RIGGING. (See figure 5-20A.)
a. The components of the anti-swivel mechanism may be disassembled or assembled by referring to figure 5-20A.
b. If cable length is changed due to replacement, or any part replaced which affects the rigging, or if elevator has been re-rigged, then the anti-swivel mechanism must be re-rigged. With the tailwheel on the ground, rig cable (7) by adjusting turnbuckle (36) so that the rounded end of pin (23) just protrudes through the aft edge of the elongated slot in collar (18), at 15° up elevator, with the leading edge of the horizontal stabilizer 2.62 inches down from the upper edge of the fuselage splice plate.

5-48. TAILWHEEL.

5-49. REPLACEMENT. (See figure 5-20.)
a. Place a suitable padded stand under aft fuselage to raise the tailwheel off the ground.
b. Remove cotter pin, nut and washer from tailwheel axle, then pull axle out of fork and remove wheel. Note position of washers, lockwashers, and spacers.

NOTE

After removal of the wheel, the fork and steering mechanism may be disassembled and parts replaced as necessary.

c. Install tailwheel by reversing steps listed above.

NOTE

Tighten axle nut until a slight bearing drag is obvious when the wheel is rotated. Back off the nut to the first castellation and install.

5-50. TAILWHEEL TIRE REPLACEMENT. (See figure 5-21.)

MODEL 180:
a. Remove cover plates and deflate tire by removing valve core.
b. Grease seals, retainers, and bearing cones need not be removed to replace a tire, although their removal for cleaning and lubrication is recommended.
c. Press flange (4) inward, forcing the tire beads together, until flange retaining ring (1) can be removed. Remove the flange retaining ring, flange, and the tire and tube.

MODEL 185:
a. Deflate tire by removing valve core.
b. Grease seals, retainers, and bearing cones need not be removed to replace a tire, although their removal for cleaning and lubrication is recommended.
c. Remove the bolts fastening the wheel halves together, then separate the wheel halves, removing tire, tube, and the gasket between the wheel halves.

NOTE

After cleaning and lubricating in accordance with the following paragraph, reassemble by reversing the applicable steps listed above.

5-51. CLEANING AND LUBRICATION. Wash all metal parts and seals in solvent and dry with compressed air. Remove felt seals from service if, after normal cleaning, they are embedded with foreign matter, the felt is not pliable, or the material is broken or does not retain the necessary shape to afford proper sealing. Pack all bearing cones with MIL-L-7711 grease. Oil seals with a light machine oil before installation.

5-52. SPEED FAIRINGS.

5-53. Optional equipment on some models and standard on others, speed fairings of resin-lamented glass-fiber construction may be installed on any Cessna tricycle gear airplane included in this manual.

5-54. REPLACEMENT. The main wheel speed fairings may be replaced by removing the screws attaching the inboard side of the fairing to the adapter plate, and removing the bolt securing the outboard side to the axle nut. Nose wheel speed fairing replacement is more involved. Early nose wheel speed fairings contained a small opening through which the nose strut passed, making it necessary to partially disassemble the nose gear in order to remove the fairing. Later models, as well as early models which have been modified, have an opening in the speed fairing which is large enough to permit the nose gear fork to pass through the fairing. A plate covers the larger opening.

To replace nose wheel speed fairings having the small strut opening (without cover plates):

WARNING

Be sure strut is deflated completely before disconnecting torque links or removing the bolt attaching the torque link fitting.

SHOP NOTES:

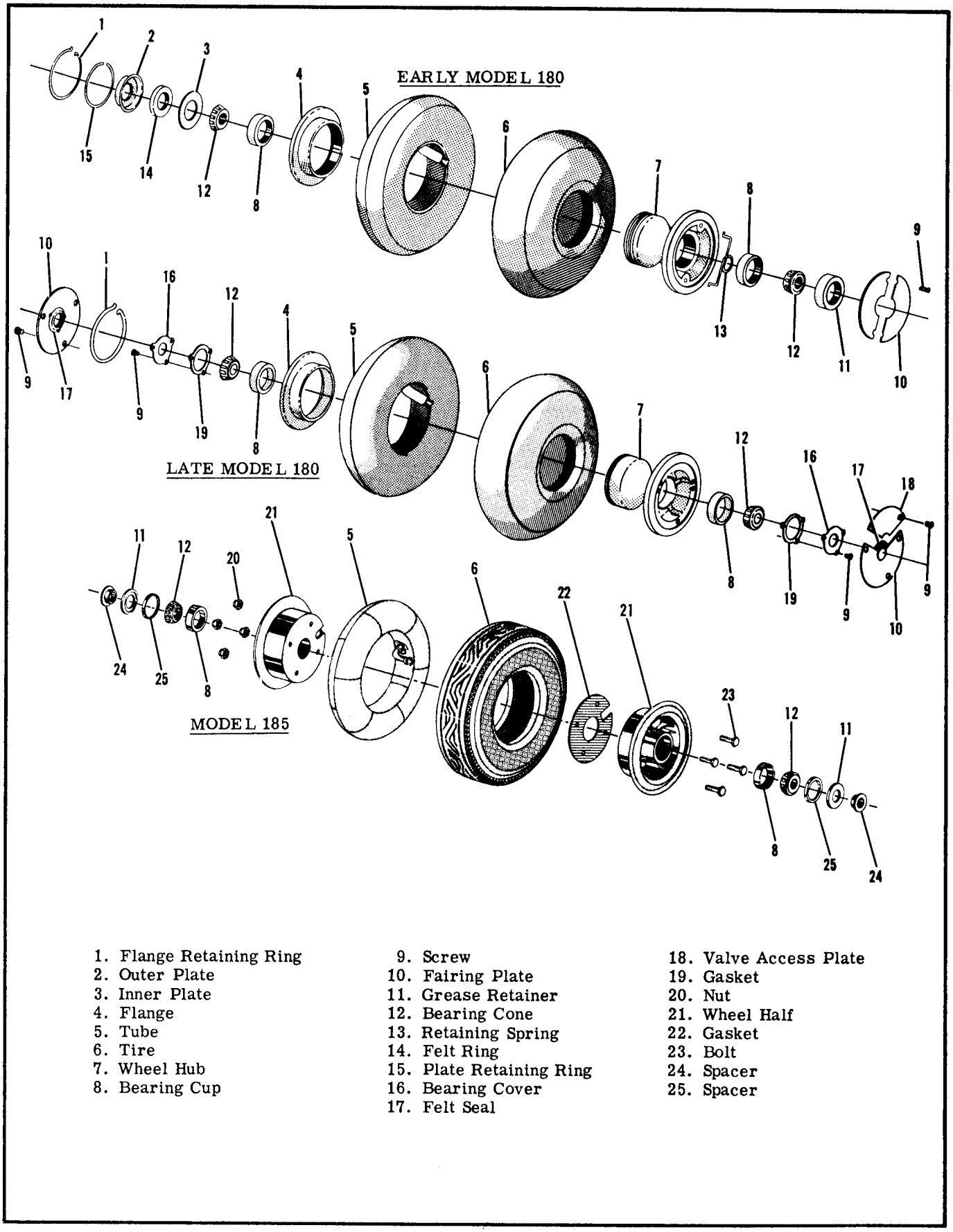

1. Flange Retaining Ring
2. Outer Plate
3. Inner Plate
4. Flange
5. Tube
6. Tire
7. Wheel Hub
8. Bearing Cup
9. Screw
10. Fairing Plate
11. Grease Retainer
12. Bearing Cone
13. Retaining Spring
14. Felt Ring
15. Plate Retaining Ring
16. Bearing Cover
17. Felt Seal
18. Valve Access Plate
19. Gasket
20. Nut
21. Wheel Half
22. Gasket
23. Bolt
24. Spacer
25. Spacer

Figure 5-21. Tailwheel Assemblies

a. After weighting or tying down the tail to raise the nose gear, disassemble the nose gear in accordance with paragraph 5-32, steps "a" through "f."

NOTE

When removing the torque link fitting, use a 5/16 inch diameter guide pin 1-15/16 inches in length to drive out the attaching bolt. Center the guide pin and leave it in place to prevent the metering pin base plug (inside the strut) from becoming misaligned.

b. Remove bolt securing speed fairing to lower strut. This bolt also attaches the fork to the strut, but these parts are a press fit and the bolt holes will remain aligned.
c. Remove nose wheel axle stud, then lift speed fairing off top of strut.
d. To install the speed fairing, reverse the steps outlined above. Service the shock strut after installation.

NOTE

If a different tire was installed or the speed fairing scraper adjustment disturbed, set the scraper clearance at .19 to .31 inch.

To replace nose gear speed fairings having the large strut opening and a removable cover plate:
a. Weight or tie down the tail to raise the nose gear.
b. Remove the nose wheel axle stud.
c. Deflate strut.

WARNING

Be sure strut is deflated completely before disconnecting torque links or removing the bolt which secures the metering pin base plug inside the strut.

d. Remove the bolt which secures the removable plate. On some models, this is the lower torque link bolt; on others it is the bolt that attaches the fork, as well as the speed fairing, to the strut.
e. If the removable plate was attached with lower torque link bolt, use a 5/16 guide pin approximately 2-1/4 inches in length to drive out the bolt securing the speed fairing (and nose gear fork) to the strut. The fork and strut are a press fit and the bolt holes will remain aligned.
f. Remove nose wheel, rotate speed fairing 90° and work it down over the nose gear fork.
g. To install the speed fairing, reverse the steps outlined above. Service the shock strut after installation.

NOTE

If a different tire was installed or the speed fairing scraper adjustment disturbed, set the scraper clearance at .19 to .31 inch.

5-55. REPAIR. A speed fairing repair kit, SK182-12, is available from the Cessna Spare Parts Department.

5-56. PRECAUTIONS. Wipe fuel and oil from the speed fairings to prevent stains and deterioration. If the aircraft is flown from surfaces with mud, snow or ice, the fairings should be checked to make sure there is no accumulation which could prevent normal wheel rotation.

5-57. BRAKE SYSTEMS.

5-58. The hydraulic brake system consists of two master cylinders, brake lines connecting each master cylinder to its wheel brake cylinder, and the single-disc type brake assemblies, located on each main landing gear.

5-59. BRAKE MASTER CYLINDERS. The brake master cylinders, located just forward of the pilot's rudder pedals, are actuated by applying toe pressure on the rudder pedals. A small reservoir is incorporated with each master cylinder to supply it with fluid. When dual brakes are installed, mechanical linkage permits the copilot's pedals to operate the master cylinders.

5-60. HYDRAULIC BRAKE LINES are of rigid aluminum tubing, except for flexible hoses used at the master cylinders and at the wheel brake assemblies on some models. A separate line is used to connect each master cylinder to its corresponding wheel brake cylinder.

5-61. WHEEL BRAKE ASSEMBLIES. Both Goodyear and Cleveland brakes are used on current models. Early Goodyear brakes use keys fastened to the wheel to transmit braking force from the disc to the wheel. Later Goodyear assemblies use a gear-tooth arrangement. Both types of Goodyear brakes contain a fixed brake assembly with a floating brake disc. The Cleveland brake uses a disc which is affixed to the wheel and a floating brake assembly.

SHOP NOTES:

5-62. TROUBLE SHOOTING THE BRAKE SYSTEM.

PROBABLE CAUSE	ISOLATION PROCEDURE	REMEDY
DRAGGING BRAKES.		
Brake pedal binding.	If brake pedals fail to return properly, check pedal for binding.	Check and adjust properly
Parking brake linkage holding brake pedal down.	Check parking brake if pedal fails to return when released.	Check and adjust properly.
Worn or broken piston return spring. (In master cylinder.)	If brake pedal fails to return after it is released and linkage is not binding, the master cylinder is faulty.	Repair or replace master cylinder.
Insufficient clearance at Lock-O-Seal in master cylinder.	If pressure remains in brake system when pedals are released, disassemble master cylinder and check Lock-O-Seal clearance.	Adjust as shown in figure 5-23.
Restriction in hydraulic lines or restriction in compensating port in master brake cylinders.	Jack up wheel to be checked. Have someone apply and then release brakes. Wheel should rotate freely as soon as brakes are released. If wheel fails to rotate freely, loosen brake line at brake housing to relieve any pressure trapped in the line. If wheel now turns freely, the brake line is restricted or there is a restriction in the brake master cylinder.	Drain brake lines and clean the inside of the brake line with filtered compressed air. Fill and bleed brakes. If cleaning the lines fails to give satisfactory results, the master cylinder may be faulty and should be repaired.
Worn, scored, or warped brake discs.	Visually check discs.	Replace brake discs and linings.
Damage or accumulated dirt restricting free movement of wheel brake parts.	Check parts for freedom of movement.	Clean and repair or replace parts as necessary.
BRAKES FAIL TO OPERATE.		
Leak in system.	Check entire system for leaks.	If brake master cylinders or wheel brake assemblies are leaking, they should be repaired or replaced.
Air in system.		Bleed system.
Lack of fluid in master cylinders.	Check fluid level.	Fill and bleed if necessary.
Master cylinder defective.		Repair or replace master cylinder.

5-63. REPLACEMENT OF BRAKE LINES. After draining, replacement of brake lines and hoses can be accomplished with common tools. All fittings are conventional. If a lubricant is needed when assembling, use clean hydraulic fluid of the type used in the system. If galling is encountered, use petrolatum on male threads only, omitting the first two threads. After installation, fill and bleed the brake system.

5-64. REPLACEMENT OF MASTER CYLINDERS.

a. Drain hydraulic fluid from brake system.

b. Remove front seats and rudder bar shield to gain access to master cylinders.

c. Disconnect parking brake linkage and master cylinders from rudder pedals.

d. Disconnect master cylinders at bottom attachment point.

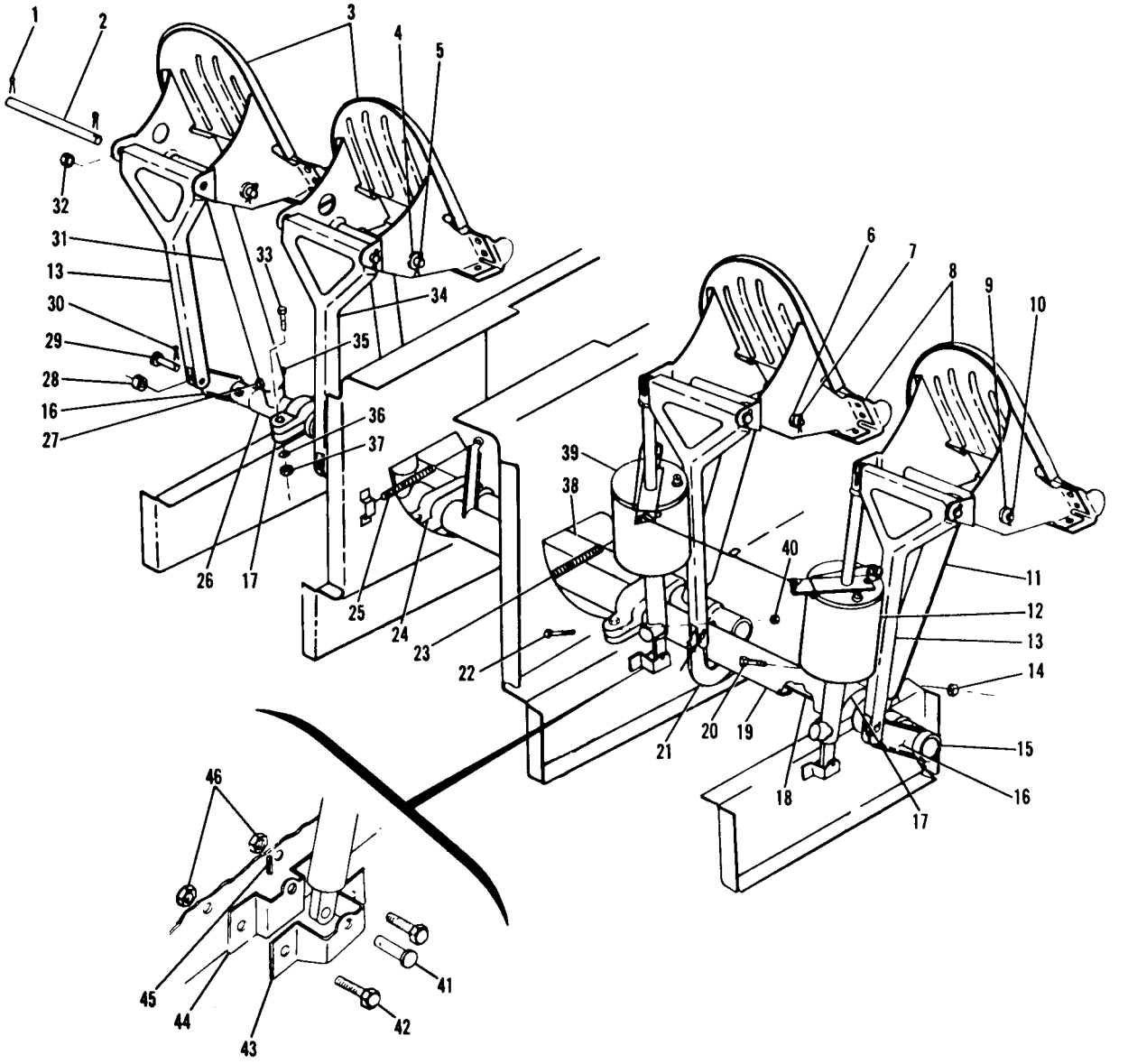

1. Cotter Pin
2. Shaft
3. Copilot's Pedals
4. Shaft
5. Cotter Pin
6. Shaft
7. Cotter Pin
8. Pilot's Pedals
9. Shaft
10. Cotter Pin
11. Rudder Bar Arm
12. Brake Cylinder Assembly
13. Dual Brake Link
14. Nut
15. Dual Brake Hub
16. Bellcrank Assembly
17. Outboard Bearing Assembly
18. Dual Brake Tube
19. Weld Assembly
20. Bolt
21. Brake Linkage Bellcrank Assembly
22. Bolt
23. Spring
24. Bearing Assembly
25. Spring
26. Bearing
27. Bolt
28. Spacer
29. Pin
30. Cotter Pin
31. Rudder Bar Arm
32. Spacer
33. Bolt
34. Dual Brake Line
35. Nut
36. Washer
37. Nut
38. Weld Assembly
39. Cylinder Assembly
40. Nut
41. Pin
42. Bolt
43. Brake Bracket
44. Brake Bracket
45. Cotter Pin
46. Nut

Figure 5-22. Typical Brake Pedals

e. Disconnect hydraulic hoses from master cylinders and remove cylinders.
f. Plug and cap hydraulic fittings, lines, and hoses to prevent entry of foreign materials.
g. Reverse the steps listed above to install master cylinders, then fill and bleed brake system.

5-65. REPAIR OF MASTER CYLINDERS is limited to the replacement of parts, cleaning, and adjustment. Clean rubber parts with alcohol or clean hydraulic fluid. Clean metal parts with solvent. Dry parts thoroughly and use clean hydraulic fluid as a lubricant during reassembly. Refer to figure 5-23 for adjustment of piston.

5-66. REMOVAL OF WHEEL BRAKES. Goodyear wheel brake assemblies are secured with the axle attaching bolts. To remove, remove the wheel and axle in accordance with paragraph 5-9. Cleveland brake assemblies are a floating type and can be removed after disconnecting the brake line and removing back plates (39, figure 5-7, or 41, figure 5-8).

NOTE

On Cleveland brakes, the brake disc can be removed after wheel removal and disassembly. Refer to paragraphs 5-18 and 5-19. To remove the torque plate, remove the wheel and axle in accordance with paragraph 5-9.

5-67. DISASSEMBLY OF WHEEL BRAKES. Details of wheel brake assemblies are shown in figures 5-5 through 5-8, which may be used as guides during disassembly.

NOTE

Use of compressed air applied to the brake line fitting is permissible when removing the piston from the brake cylinder.

5-68. INSPECTION AND REPAIR OF WHEEL BRAKES.
a. Clean all parts except brake linings and O-rings in dry cleaning solution and dry thoroughly.
b. O-rings are usually replaced at each overhaul. If their re-use is necessary, they should be wiped with a clean oiled cloth and inspected for damage.

NOTE

Thorough cleaning is important. Dirt and chips are the greatest cause of malfunctions in hydraulic brake systems.

c. Check brake linings for deterioration and maximum permissible wear (see paragraph 5-71).
d. Inspect brake cylinder bore for scoring. A scored cylinder may leak or cause rapid O-ring wear. A scored brake cylinder should be replaced.
e. If the anchor bolts on Cleveland brakes are nicked or gouged, they should be sanded smooth to prevent binding with the pressure plate or torque plate. When the anchor bolts are replaced, they should be pressed out. New ones can be installed by tapping them in place with a soft hammer.

5-69. ASSEMBLY OF WHEEL BRAKES. Lubricate parts with the type hydraulic fluid used in the system and assemble components with care to prevent damage to O-rings. Use figures 5-5 through 5-8 as guides during assembly.

5-70. INSTALLATION OF WHEEL BRAKES. On Goodyear assemblies, install the brake assembly as the wheel and axle are installed. Refer to paragraph 5-10. On Cleveland assemblies, place the brake assembly in position with pressure plate in place, then install the shim and back plate, and safety their attaching bolts.

NOTE

On Cleveland brake assemblies, if the torque plate was removed, install as the wheel and axle are installed in accordance with paragraph 5-10. If the brake disc was removed from the wheel, install as the wheel is assembled and installed in accordance with paragraphs 5-21 and 5-22.

5-71. CHECKING BRAKE LININGS. To check Goodyear brake linings for wear, set the parking brake and attempt to insert a strip of 5/16 inch material between the inboard face of the brake disc and the brake housing. Replace the linings when the strip can be inserted. Cleveland brake linings should be replaced when they are worn to a minimum thickness of 3/32 inch. Visually compare a 3/32 inch strip of material held adjacent to each lining to measure the thickness of the lining. The shank end of correct size drill bits make excellent tools for checking minimum thickness of brake linings.

5-72. BRAKE LINING REPLACEMENT. On Goodyear brakes, remove the wheel, replace the brake linings, and reinstall the wheel. Replace brake linings on Cleveland brakes as follows:

NOTE

The following procedure applies specifically to the Cleveland brakes used on the Model 150, as shown in figure 5-7. Although those used on the Model 185 are not identical, the same general procedure can be followed.

a. Remove bolts (29), washers (31), back plate (39), and shim (36).
b. Pull the brake cylinder out of torque plate (23) and slide pressure plate (24) off anchor bolts (25).
c. Place back plate on a table with lining side down flat. Center a 9/64 inch (or slightly smaller) punch in the rolled rivet, and hit the punch crisply with a hammer. Punch out all rivets securing the linings to the back plate and pressure plate in the same manner.

NOTE

A rivet setting kit, Part No. R561, is available from the Cessna Spare Parts Department. This kit consists of an anvil and punch.

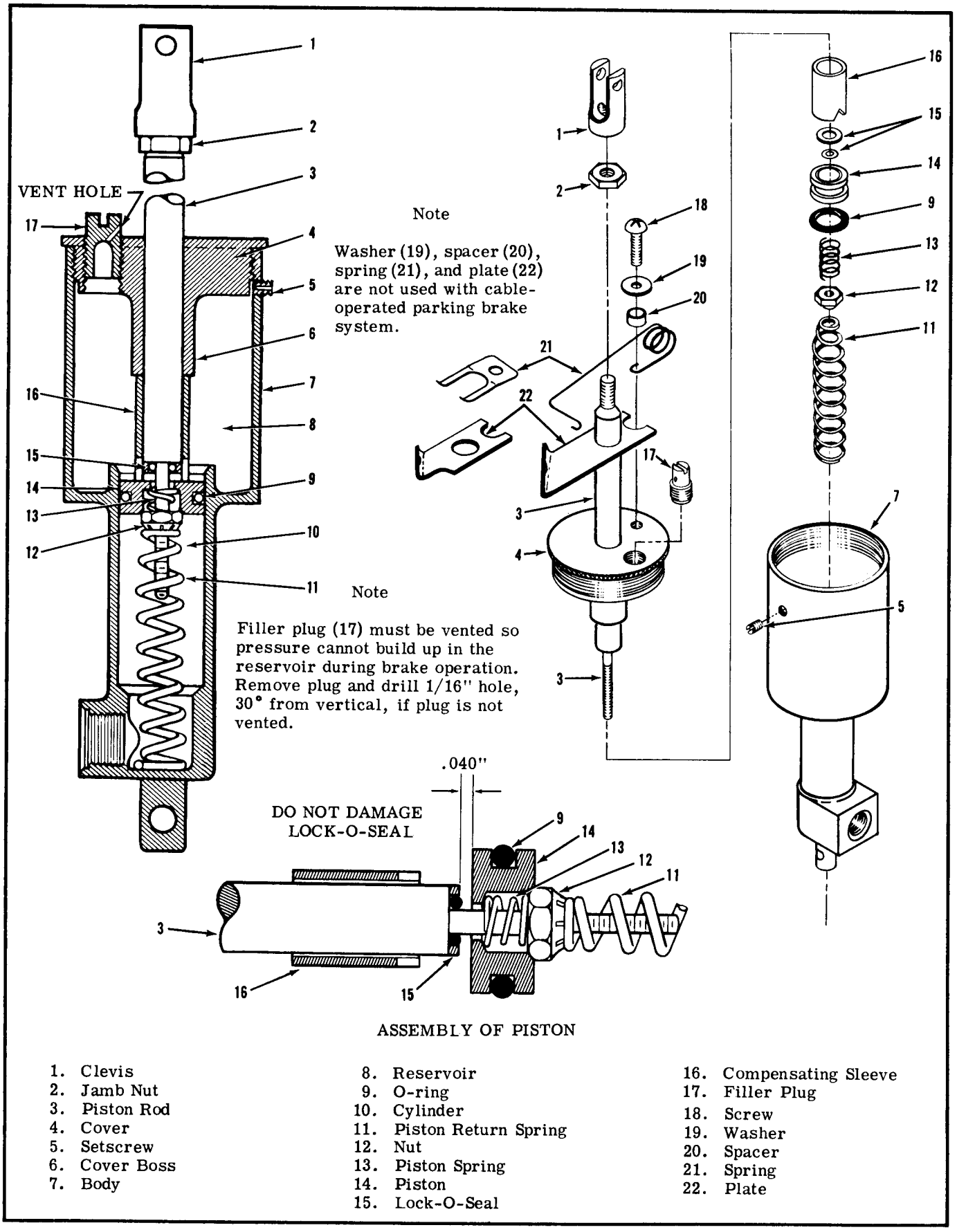

1. Clevis
2. Jamb Nut
3. Piston Rod
4. Cover
5. Setscrew
6. Cover Boss
7. Body
8. Reservoir
9. O-ring
10. Cylinder
11. Piston Return Spring
12. Nut
13. Piston Spring
14. Piston
15. Lock-O-Seal
16. Compensating Sleeve
17. Filler Plug
18. Screw
19. Washer
20. Spacer
21. Spring
22. Plate

Figure 5-23. Brake Master Cylinder

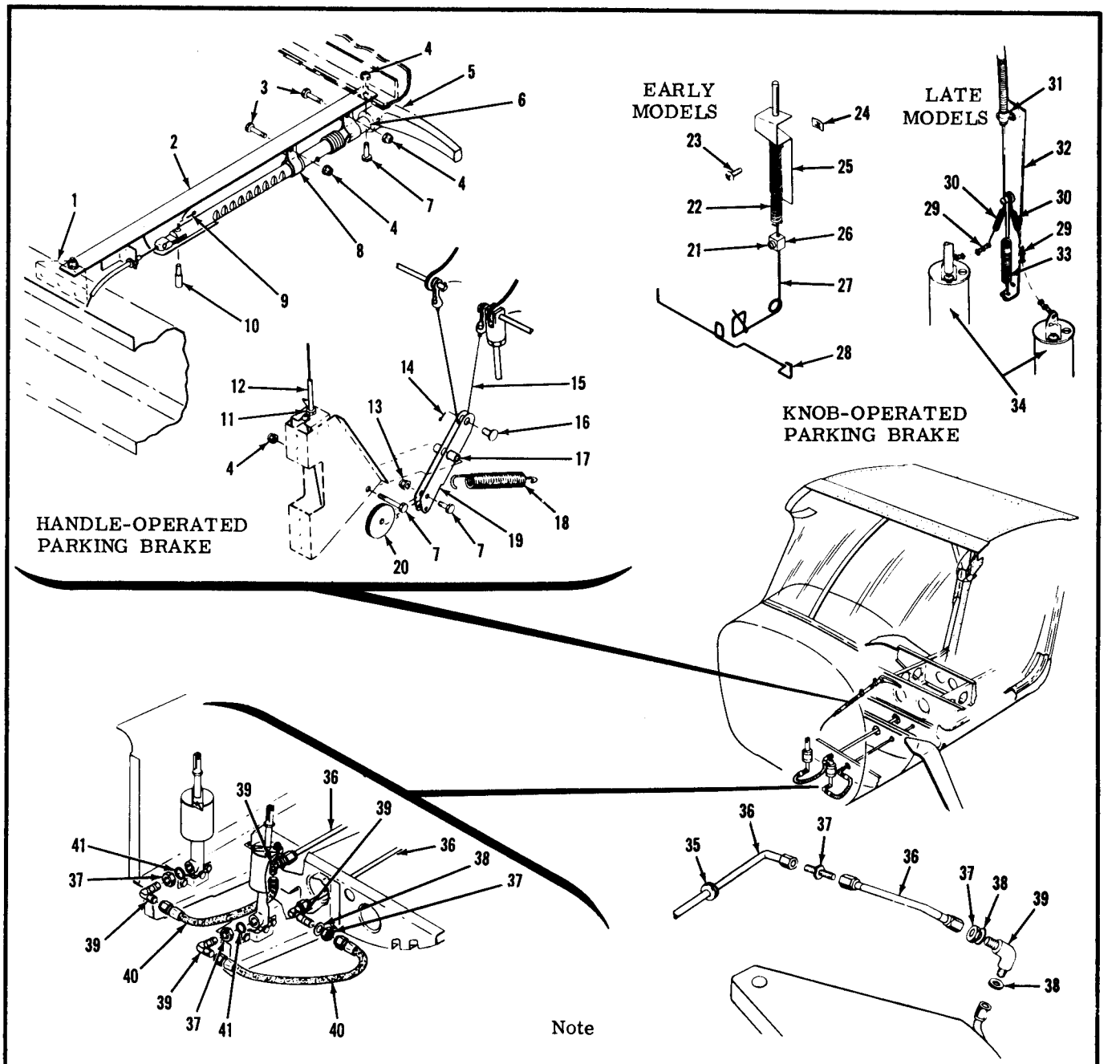

Note

Brake line rerouting, redesign of parking brake linkage, and other minor changes have been made among the various models according to their date of manufacture.

1. Attaching Angle
2. Stiffener Angle
3. Bolt
4. Nut
5. Handle
6. Housing
7. Bolt
8. Clamp
9. Cotter Pin
10. Positioning Pin
11. Nut
12. Tube Assembly
13. Nut
14. Cotter Pin
15. Cable
16. Clevis Pin
17. Bushing
18. Spring
19. Bellcrank Assembly
20. Pulley
21. Screw
22. Spring
23. Screw
24. Nut
25. Clamp
26. Clamp
27. Linkage Spring
28. Cross Arm
29. Chain
30. Spring
31. Clamp
32. Plate
33. Spring
34. Master Cylinder
35. Grommet
36. Brake Line
37. Nut
38. Washer
39. Elbow
40. Brake Hose
41. O-Ring

Figure 5-24. Brake System

d. Clamp the flat sides of the anvil in a vise.
e. Align new lining (38) on back plate (39) and place brake rivet (37) in the center hole with the rivet head in the lining. Place rivet head against the anvil.
f. Center the rivet setting punch on the lips of the rivet. While holding the back plate down firmly against the lining, hit the punch with a hammer to set the rivet. Repeat blows on the punch until lining is firmly against the back plate.
g. Realign the lining on the back plate and install the remaining rivets.
h. Install a new lining on pressure plate (24) in the same manner.
i. Position pressure plate (24) on anchor bolts (25), and plate cylinder (26) in position so the anchor bolts slide into torque plate (23).
j. Install shim (36) and back plate (39) with bolts (29) and washers (31). Safety the bolts.

5-73. BRAKE BLEEDING. Standard bleeding, with a clean hydraulic pressure source connected to the wheel cylinder bleeder, is recommended.
a. Remove the master cylinder filler plug and screw a flexible hose with a suitable fitting into the filler hole. Immerse the free end of the hose in a can containing enough hydraulic fluid to cover the end of the hose.
b. Connect a clean hydraulic pressure source, such as a hydraulic hand pump, to the bleeder provision in the wheel cylinder.

NOTE

Either a bleeder valve or a bleeder screw is provided in the wheel cylinder.

c. As fluid is pumped into the system, observe the immersed end of the hose at the master cylinder for evidence of air bubbles being forced from the brake system. When bubbling has ceased, remove the bleeder source from the brake wheel cylinder and tighten the bleeder valve or install the bleeder screw with a new seal.

NOTE

Insure that the free end of the hose from the master cylinder remains immersed during the entire bleeding process.

d. Remove hose from master cylinder and replace filler plug.

5-74. PARKING BRAKE SYSTEMS.

5-75. Two different types of parking brake systems are employed in the different airplane models. One uses a knob-operated control which actuates locking levers on the master cylinders. The levers trap pressure in the system after the master cylinder piston rods have been depressed by toe-operation of the rudder pedals. The other type parking brake system uses a handle and ratchet mechanism connected by a cable to linkage at the master cylinders. Pulling out the handle depresses both master cylinder piston rods and the ratchet locks the handle in this position until the handle is turned and released.

5-76. REPLACEMENT. The various parts of the knob-operated or handle-operated parking brake system are shown in figure 5-24, which may be used as a guide when replacing parts. The knob-operated system should be adjusted so that the locking levers cannot, under any circumstances, be actuated as long as the control knob is pushed full in. At the same time, the locking levers must be actuated when the control knob is pulled out. Various design changes have been made in the locking mechanism on the knob-operated control, but each has a clamp provided for adjustment to attain proper rigging.

SHOP NOTES:

This page intentionally left blank.

SECTION 6

AILERON CONTROL SYSTEM

TABLE OF CONTENTS

	Page
AILERON CONTROL SYSTEM	6-1
Control Tee or "Y"	6-1
Control Column	6-1
Aileron Cables	6-1
Aileron Bellcranks	6-1
Ailerons	6-2
Checkout of the Aileron System	6-2
Trouble Shooting	6-2
Removal of Control Tee	6-7
Removal of Control "Y"	6-7
Removal of Control Column	6-7
Repair of Control Column, Tee, or "Y"	6-7
Replacement of Control Column, Tee, or "Y"	6-7
Removal of Aileron Bellcrank	6-7
Repair of Aileron Bellcrank	6-7
Replacement of Aileron Bellcrank	6-7
Replacement of Aileron Cables and Pulleys	6-7
Removal of Aileron	6-7
Repair of Aileron	6-11
Replacement of Aileron	6-11
Rigging Aileron Control System	6-11

6-1. AILERON CONTROL SYSTEM.

6-2. The aileron control system is composed of a push-pull rod and bellcrank in each wing, cables, pulleys, sprockets, roller chains and the components forward of the instrument panel, all of which link the control wheel to the ailerons. A control tee is used on all models except the 150 (1961 and on) and the 182 (1962 and on). In 1961, the control tee on the 150 was replaced with a control "Y". In 1962, the control tee on the 182 was replaced with a control column.

6-3. CONTROL TEE OR "Y". The control tee or "Y" synchronizes the control wheels and transmits control wheel rotation through the system to operate the ailerons. Both the control tee and "Y" are pivoted a few inches above their lower end so that fore-and-aft motion can operate the elevator control system. The control tee is shown in figure 6-1 and the control "Y" is shown in figure 6-2.

6-4. CONTROL COLUMN. The 182 (1962 and on) used a control column which operates in a different manner than the control tee or "Y". Details of the control column are shown in figure 6-3. Rotation of the control wheel rotates four needle bearing rollers on the end of the control wheel tube which, in turn, rotate a square tube (aileron control tube) inside and extending from the control wheel tube. Attached to this square tube is a sprocket which operates the aileron system. The same arrangement is provided for both control wheels and synchronization is obtained by the interconnecting roller chains and sprockets. The sprocket end of the square tube is mounted in a bearing block on the firewall and does not move fore and aft but rotates with the control wheel. The four needle bearing rollers on the end of the control wheel tube reduce friction as the control wheel is moved fore and aft for elevator system operation. A sleeve weld assembly, containing bearings which permit the control wheel tube to rotate within it, is secured to the control wheel tube by a sleeve and retaining ring in such a manner that it moves fore and aft with the control wheel tube. This movement allows the push-pull tube (elevator control tube) attached to the weld assembly to operate an elevator arm assembly, to which one elevator cable is attached. A torque tube connects this arm assembly to the opposite one, to which the other elevator cable is attached. When dual controls are installed, the copilot's control wheel is linked to the aileron and elevator control systems in the same manner as the pilot's control wheel.

6-5. AILERON CABLES. Three cables are employed in the aileron system. A direct cable is routed to the bellcrank in each wing and a carry-thru cable closes the system by interconnecting the two bellcranks. Beginning with figure 6-4, routings of the various cables are shown.

6-6. AILERON BELLCRANKS. An aileron bellcrank, pivoted on needle bearings, is installed in each wing to transmit aileron cable motion to the ailerons. Each bellcrank is equipped with a fixed stop which allows a total aileron travel of approximately 35°.

6-7. AILERONS. An all-metal aileron is attached by hinge strips to the trailing edge of each wing, between the flap and the wing tip. Each aileron is actuated by an adjustable push-pull rod connected to the aileron bellcrank.

6-8. CHECKOUT OF THE AILERON SYSTEM.

a. Move ailerons through complete range of motion, checking for stiffness, uneven or jumpy motion of the control wheel, and proper direction of movement.

b. With the control wheel in neutral, check the tension on the aileron carry-thru cable. Tension should be 40±10 pounds.

c. With the control wheel in neutral, check to see that both ailerons are aligned with the flap trailing edges and that both control wheels are synchronized.

d. Check aileron travel. Travel should be 20°±1° up and 15°±1° down. On the Model 182 (1962 and on), tolerance is ± 2°.

6-9. TROUBLE SHOOTING THE AILERON SYSTEM.

PROBABLE CAUSE	ISOLATION PROCEDURE	REMEDY
LOST MOTION IN CONTROL WHEEL.		
Loose control cables.	Check cable tension.	Adjust cables to proper tension.
Broken pulley.	Visually check pulleys.	Remove and replace broken pulley.
Sprung bellcranks.	Visually check bellcranks.	Remove and replace sprung bellcranks.
Deformed pulley brackets.	Visually check pulley brackets.	Remove and replace deformed pulley brackets.
Worn rod ends.	Visually check rod ends.	Remove and replace worn rod ends.
Loose chains.	Check chain tension.	Adjust chains to proper tension.
RESISTANCE TO CONTROL WHEEL MOVEMENT.		
Cables too tight.	Check cable tension.	Adjust cables to a proper tension.
Pulleys binding.	Observe motion of the pulleys as ailerons are being operated.	Remove and replace defective pulley.
Rusty chain.	Visually check chain.	Remove and replace rusty chain.
Chain binding with sprockets.	Check freedom of movement.	Remove and replace defective parts.
Bellcrank distorted or damaged.	Visually check bellcrank.	Remove and replace bellcrank.
Defective U-joints, if used.	Observe motion of U-joints.	Remove and replace defective U-joints.
Clevis bolts too tight.	Check bolt binding.	Readjust to eliminate binding.
Cable off pulley.	Check rigging of cable.	Replace cable on pulley.
(182, 1962 and on) Defective bearings in sleeve weld assy on control wheel tube.	Disconnect chains and check for binding.	Remove and replace defective parts.
(182, 1962 and on) Nuts securing shaft in bearing blocks on firewall too tight.	Loosen nuts to check if binding is eliminated.	Loosen nuts the least amount required to eliminate binding and align cotter pin hole, but not over .030" maximum clearance.
(182, 1962 and on) Defective bearing in idler sprocket assembly on firewall.	Disconnect chains and check for binding.	Remove and replace defective parts.

PROBABLE CAUSE	ISOLATION PROCEDURE	REMEDY
CONTROL WHEEL NOT LEVEL WITH AILERONS NEUTRAL.		
Improper adjustment of chains or cables.	With control wheel centered, aileron bellcrank stop bushing should be centered in slot (both left and right bellcranks).	Readjust chains and cables in accordance with rigging procedure.
Improper adjustment of aileron push-pull rods.	If chains and cables are properly rigged and bellcrank stop bushings are centered in slots, push-pull rods are adjusted incorrectly.	Adjust push-pull rods properly.
DUAL CONTROL WHEELS NOT COORDINATED.		
Chains not properly adjusted on sprockets.	Check rigging of chains.	Adjust in accordance with rigging procedure.
INCORRECT AILERON TRAVEL.		
Aileron system incorrectly rigged.	Check rigging.	Rig in accordance with rigging procedure.
Worn bellcrank stop bushings or bellcrank slots.	Check visually.	Replace worn parts.

SHOP NOTES:

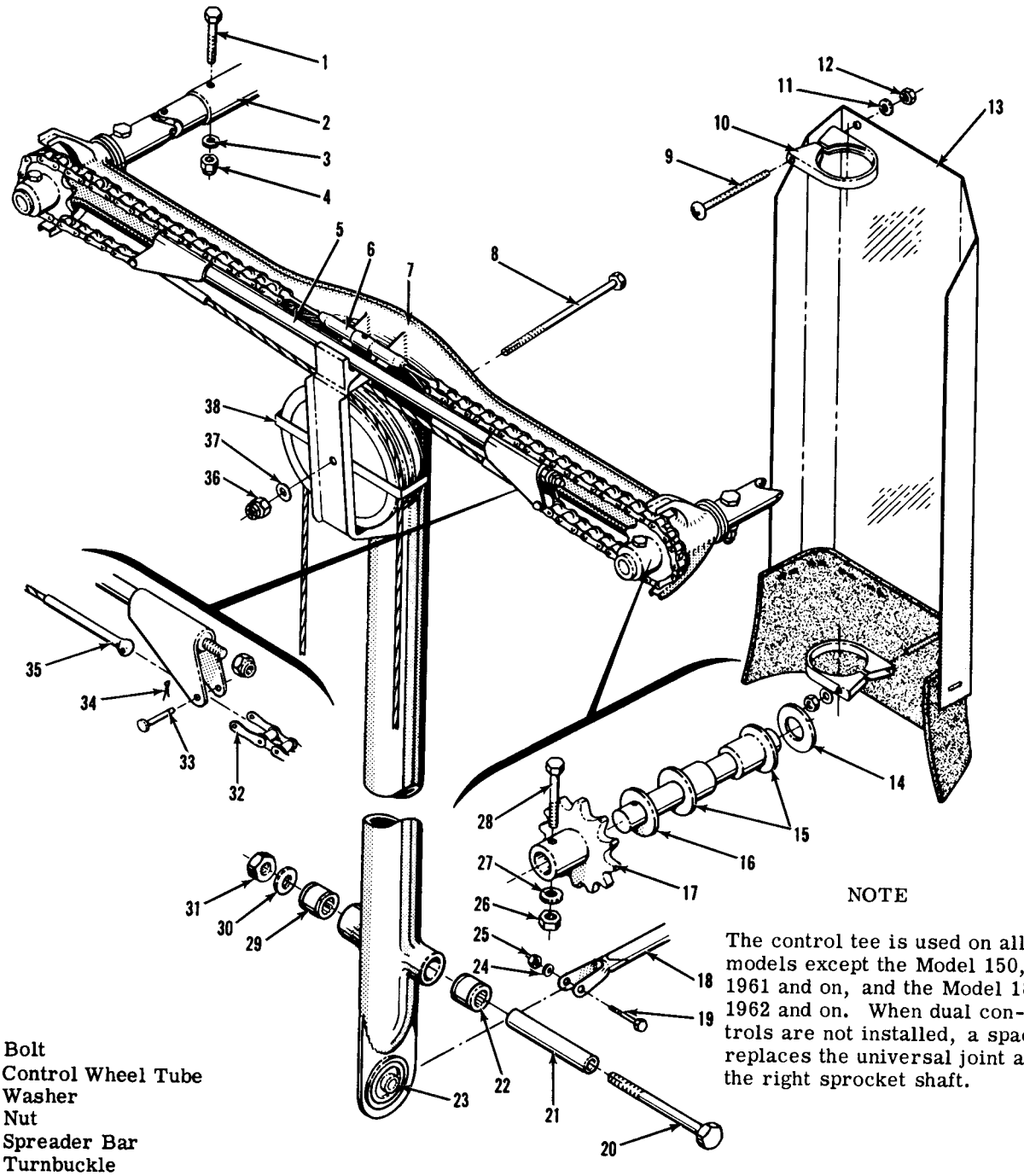

NOTE

The control tee is used on all models except the Model 150, 1961 and on, and the Model 182, 1962 and on. When dual controls are not installed, a spacer replaces the universal joint at the right sprocket shaft.

1. Bolt
2. Control Wheel Tube
3. Washer
4. Nut
5. Spreader Bar
6. Turnbuckle
7. Control Tee Weld Assembly
8. Bolt
9. Screw
10. Clamp
11. Washer
12. Nut
13. Trim Shield Assembly
14. Washer
15. Oilite Bushings
16. Washer
17. Sprocket
18. Elevator Push-pull Tube
19. Bolt
20. Bolt
21. Spacer
22. Needle Bearing
23. Bearing
24. Washer
25. Nut
26. Nut
27. Washer
28. Bolt
29. Needle Bearing
30. Washer
31. Nut
32. Roller Chain
33. Clevis Pin
34. Cotter Pin
35. Aileron Cable End

Figure 6-1. Control Tee

NOTE

The control "Y" is used on the Model 150, 1961 and on. When dual controls are installed, spacer (9) is replaced with a universal joint to which the right control wheel tube attaches.

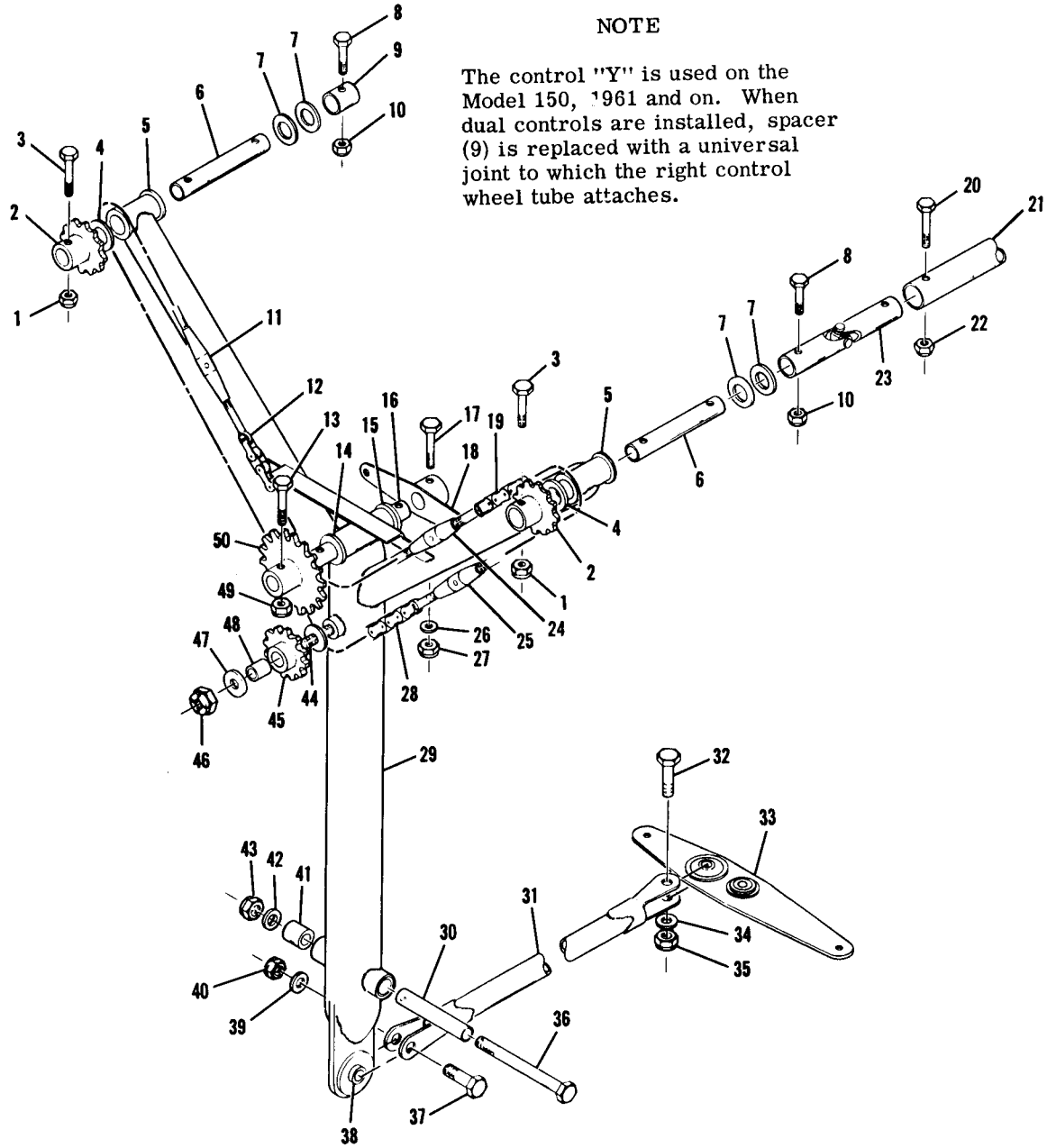

1. Nut
2. Sprocket
3. Bolt
4. Washer
5. Bearing
6. Shaft
7. Washer
8. Nut
9. Spacer
10. Nut
11. Barrel
12. Chain Assembly
13. Nut
14. Bearing
15. Bearing
16. Shaft
17. Nut
18. Arm
19. Chain Assembly
20. Nut
21. Control Wheel Tube
22. Nut
23. Universal Joint
24. Barrel
25. Barrel
26. Washer
27. Nut
28. Chain Assembly
29. Control "Y"
30. Bushing
31. Control Link
32. Bolt
33. Bellcrank
34. Washer
35. Nut
36. Bolt
37. Bolt
38. Control Link
39. Washer
40. Nut
41. Bearing
42. Washer
43. Nut
44. Bolt
45. Sprocket
46. Nut
47. Washer
48. Bushing
49. Nut
50. Sprocket

Figure 6-2. Control "Y"

NOTE

The control column is used on the Model 182, 1962 and on. When dual controls are installed, items (35, 36, 37, and 38) are replaced with the right control assembly, which is the same as the left one except for the plates where the control passes through the instrument panel.

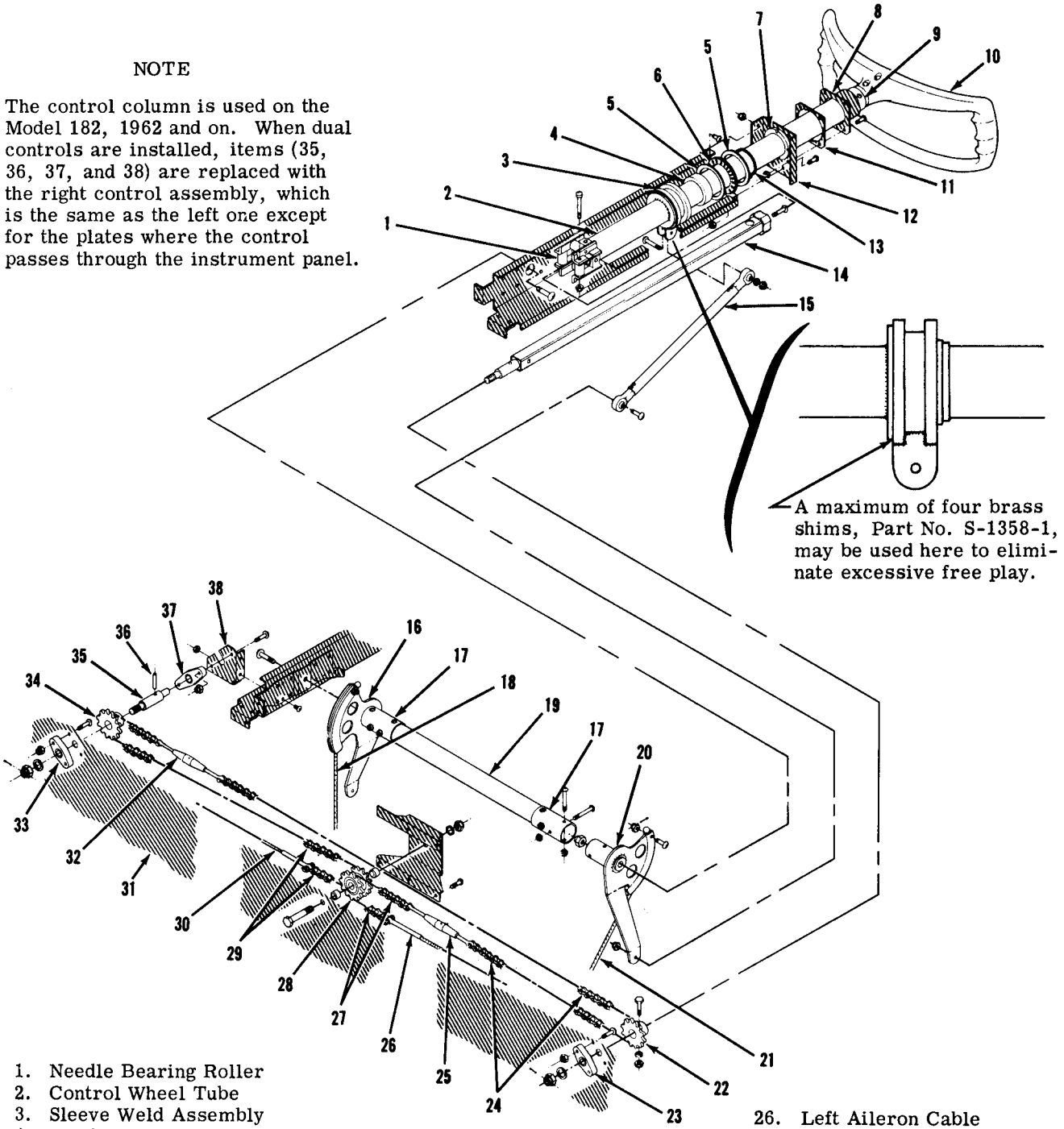

1. Needle Bearing Roller
2. Control Wheel Tube
3. Sleeve Weld Assembly
4. Needle Bearing
5. Thrust Bearing Race
6. Needle Thrust Bearing
7. Grommet
8. Control Lock Collar
9. Control Wheel Adapter
10. Control Wheel
11. Spacer
12. Plate
13. Retainer Ring
14. Aileron Control Tube
15. Elevator Control Tube
16. Right Elevator Arm Assembly
17. Sleeve
18. Down Elevator Cable
19. Elevator Torque Tube
20. Left Elevator Arm Assembly
21. Up Elevator Cable
22. Left Aileron Sprocket
23. Bearing Block
24. Upper Left Aileron Chain
25. Turnbuckle
26. Left Aileron Cable
27. Lower Left Aileron Chain
28. Aileron Idler Sprocket
29. Right Aileron Chain
30. Right Aileron Cable
31. Firewall
32. Turnbuckle
33. Bearing Block
34. Right Aileron Sprocket
35. Shaft
36. Roll Pin
37. Bearing Block
38. Support

Figure 6-3. Control Column

6-10. REMOVAL OF CONTROL TEE. (See figure 6-1.)

a. Remove control tee shield (13).

b. Peel back tunnel cover carpet for access to bolt (20). Remove bolt (19) attaching elevator push-pull rod (18) and control tee pivot bolt (20).

c. Remove cotter pins (34) and clevis pins (33). Work cable ends free of control tee pulleys.

d. Remove bolts (1) securing control tubes to universal joints and remove control tee.

6-11. REMOVAL OF CONTROL "Y". (See figure 6-2.)

a. Remove control column shield.

b. Peel back tunnel cover carpet for access to bolt (36). Remove bolt (37) attaching elevator push-pull tube (31) and control pivot bolt (36).

c. Remove bolts attaching cable ends to control arm (18).

d. Remove bolts (8) securing control wheel tubes to universal joints and remove control "Y".

6-12. REMOVAL OF CONTROL COLUMN. (See figure 6-3.)

a. Remove the three screws attaching the control wheel to the control wheel tube. Remove the control wheel.

b. Remove shock-mounted instrument panel in accordance with paragraph 16-5.

c. Remove screws securing plate (12).

d. Remove elevator control tube (15).

e. Loosen turnbuckle (25) and disengage chain from sprocket (22).

f. Remove nut and washer from shaft protruding through bearing block (23) on forward side of firewall.

g. Pull control wheel tube assembly aft to remove.

NOTE

The copilot's control is removed in a similar manner. A plate-covered hole large enough to permit removal is provided in the stationary instrument panel.

h. Remove eight screws securing sleeves (17) and slide the sleeves inboard, clear of the elevator arm assemblies to remove torque tube (19).

i. Disconnect elevator cables from elevator arm assemblies (16 and 20) and remove attaching screws and nuts to remove the arm assemblies.

j. After removal, detail parts may be removed or replaced as required.

6-13. REPAIR OF CONTROL COLUMN, TEE, OR "Y." Worn, damaged, or defective shafts, bearings, bushings, sprockets, roller chains, universal joints, and other components should be replaced. Refer to the lubrication diagram in Section 2 for lubrication recommendations.

6-14. REPLACEMENT OF CONTROL COLUMN, TEE, OR "Y" may be accomplished by reversing the removal procedure. Be sure to resafety all parts that were safetied. Check elevator and aileron systems for correct rigging. On the Model 182, 1962 and on, the nuts securing the shafts protruding through bearing blocks (23 and 33) should be tightened snugly, then loosened the least amount required to eliminate binding and align a cotter pin hole, but not more than .030 inch maximum clearance.

6-15. REMOVAL OF AILERON BELLCRANK.

a. Open access cover inboard of bellcrank and disconnect control cables from bellcrank by unscrewing turnbuckle barrels.

b. Detach aileron push-pull rod from bellcrank by removing attaching nut, washers and bolt.

c. Remove nuts, washers, and bolts securing bellcrank stop bushing and bellcrank to wing structure. Remove bellcrank through access opening, using care that bushing is not dropped from bellcrank. One or more brass washers may be used as shims between lower end of the bellcrank and the wing.

NOTE

Tape open ends of bellcrank bearings to prevent dust or dirt from entering needle bearings.

6-16. REPAIR OF AILERON BELLCRANK consists of the replacement of defective bushings and bearings. If needle bearings are dirty or need grease, lubricate as specified in the lubrication diagram in Section 2.

6-17. REPLACEMENT OF AILERON BELLCRANK.

a. Place bushing in bellcrank and position bellcrank in wing, installing brass washers used as required to shim out excessive clearance between the bellcrank and the wing. Install bellcrank pivot bolt.

b. Position bellcrank stop bushing and install attaching bolt.

c. Connect aileron cables to bellcrank and rig the aileron system.

6-18. REPLACEMENT OF AILERON CABLES AND PULLEYS may be accomplished after removing access covers, wing root fairings, and upholstery as required for access.

a. Disconnect cables from the aileron bellcranks in the wings, and remove cable guards and pulleys as necessary to work the cables free of the aircraft.

NOTE

To ease rerouting of cables, a length of wire may be attached to the end of a cable before it is withdrawn from the aircraft. Leave the wire in place, routed through the aircraft, then attach it to the cable being installed and use it to pull the cable into position.

b. After the cable is routed in position, install pulleys and cable guards. Make sure cable is positioned in pulley groove when installing cable guard.

c. Rig the aileron system.

6-19. REMOVAL OF AILERON.

a. Disconnect push-pull rod from aileron.

b. Remove screws and nuts securing aileron hinge strips to trailing edge of wing, and remove aileron.

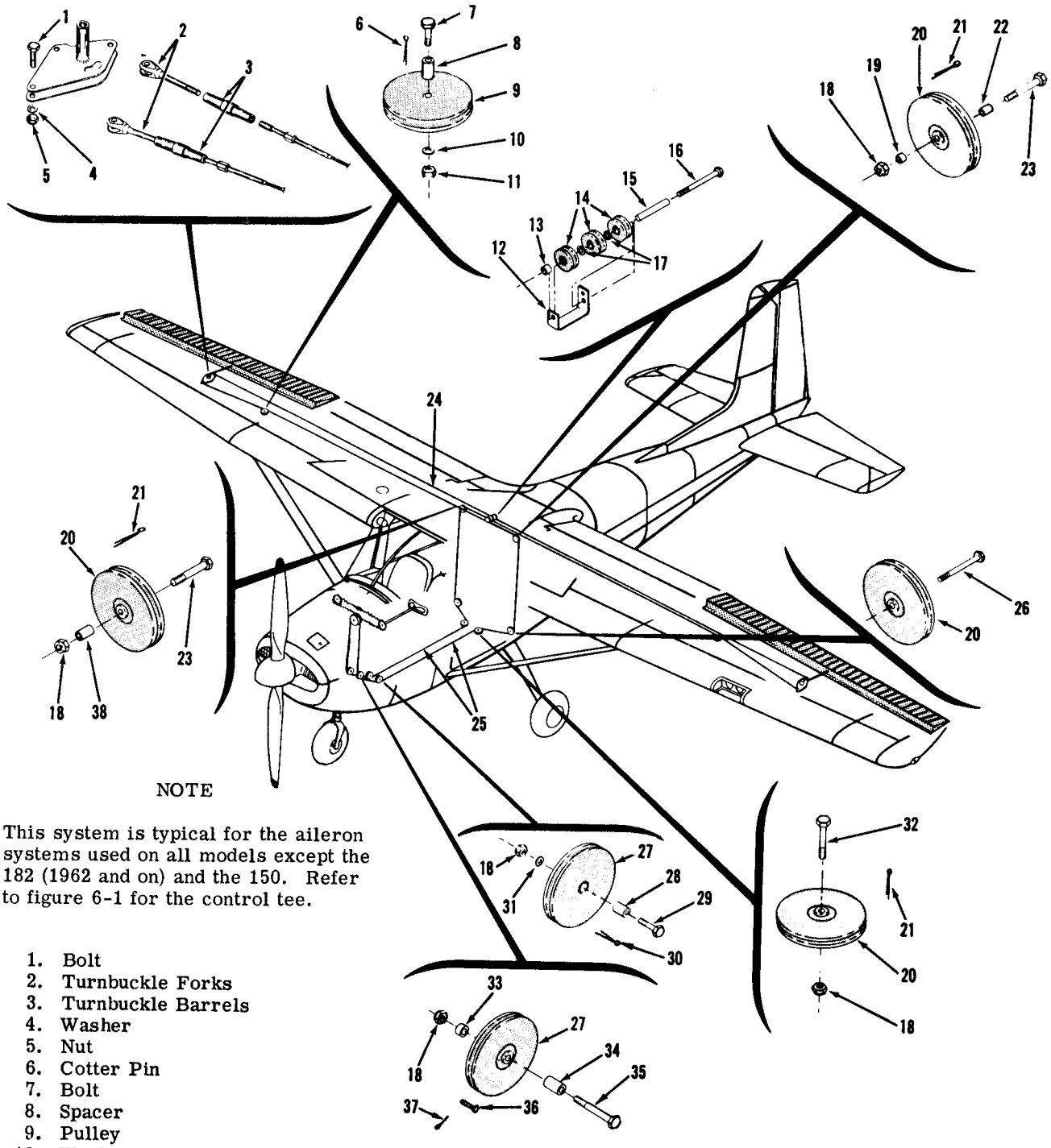

NOTE

This system is typical for the aileron systems used on all models except the 182 (1962 and on) and the 150. Refer to figure 6-1 for the control tee.

1. Bolt
2. Turnbuckle Forks
3. Turnbuckle Barrels
4. Washer
5. Nut
6. Cotter Pin
7. Bolt
8. Spacer
9. Pulley
10. Washer
11. Nut
12. Cable Guard
13. Spacer
14. Pulleys
15. Bushing
16. Bolt
17. Washers
18. Nut
19. Spacer
20. Pulley
21. Cotter Pin
22. Spacer
23. Bolt
24. Carry-thru Cable
25. Aileron Direct Cables
26. Bolt
27. Pulley
28. Spacer
29. Bolt
30. Cotter Pin
31. Washer
32. Bolt
33. Spacer
34. Spacer
35. Bolt
36. Clevis Pin
37. Cotter Pin
38. Spacer

Figure 6-4. Aileron Control System

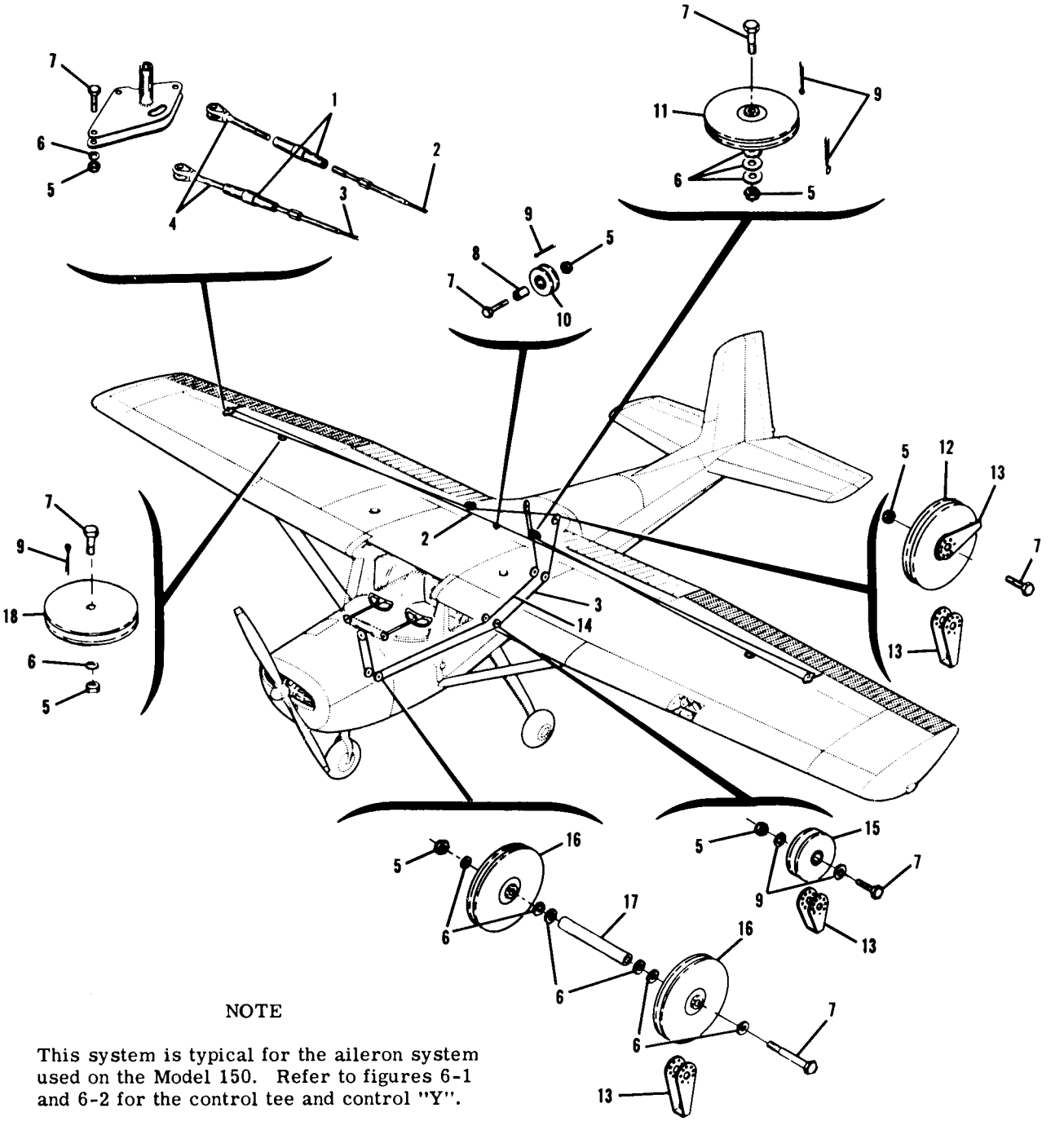

NOTE

This system is typical for the aileron system used on the Model 150. Refer to figures 6-1 and 6-2 for the control tee and control "Y".

1. Turnbuckle Barrels
2. Carry-Thru Cable
3. Right Aileron Direct Cable
4. Turnbuckle Forks
5. Nut
6. Washer
7. Bolt
8. Spacer
9. Cotter Pin
10. Pulley
11. Pulley
12. Pulley
13. Cable Guard
14. Left Aileron Direct Cable
15. Pulley
16. Pulley
17. Spacer
18. Pulley

Figure 6-5. Aileron Control System

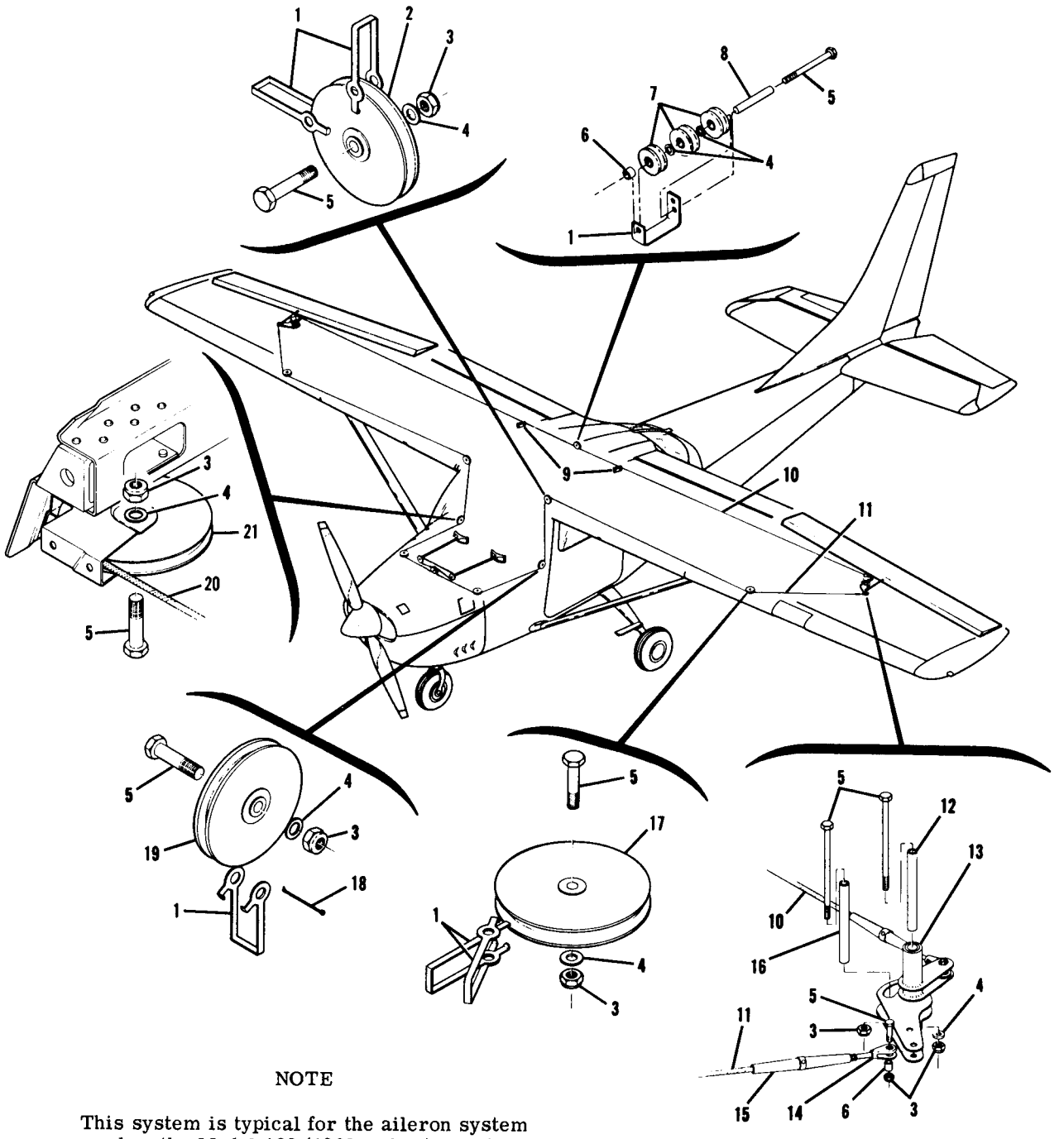

NOTE

This system is typical for the aileron system used on the Model 182 (1962 and on). Refer to figure 6-3 for the control column.

1. Cable Guard
2. Pulley
3. Nut
4. Washer
5. Bolt
6. Spacer
7. Pulley
8. Bushing
9. Rub Strip
10. Carry-Thru Cable
11. Left Aileron Direct Cable
12. Spacer
13. Aileron Bellcrank
14. Turnbuckle Fork
15. Turnbuckle
16. Bellcrank Stop Bushing
17. Pulley
18. Cotter Pin
19. Pulley
20. Right Aileron Direct Cable
21. Pulley

Figure 6-6. Aileron Control System

6-20. REPAIR OF AILERON may be accomplished in accordance with instructions in Section 19. Check static balance and be sure balance weights and hinges are securely attached to aileron before installation.

6-21. REPLACEMENT OF AILERON.

a. Position aileron and install screws and nuts to secure hinge strips to trailing edge of wing.

b. Attach push-pull rod to aileron. If rigging was correct and push-pull rod adjustment was not disturbed, it should not be necessary to rerig. Check aileron travel and alignment, and rerig if necessary.

6-22. RIGGING AILERON CONTROL SYSTEM.

a. (See figure 6-2.) On the control tee, adjust the total length of spreader bar (5) and turnbuckle (6) so that both control wheels are level in the neutral position (synchronized).

b. (See figure 6-3.) On the control "Y", adjust turnbuckles (11, 24, and 25) so that both control

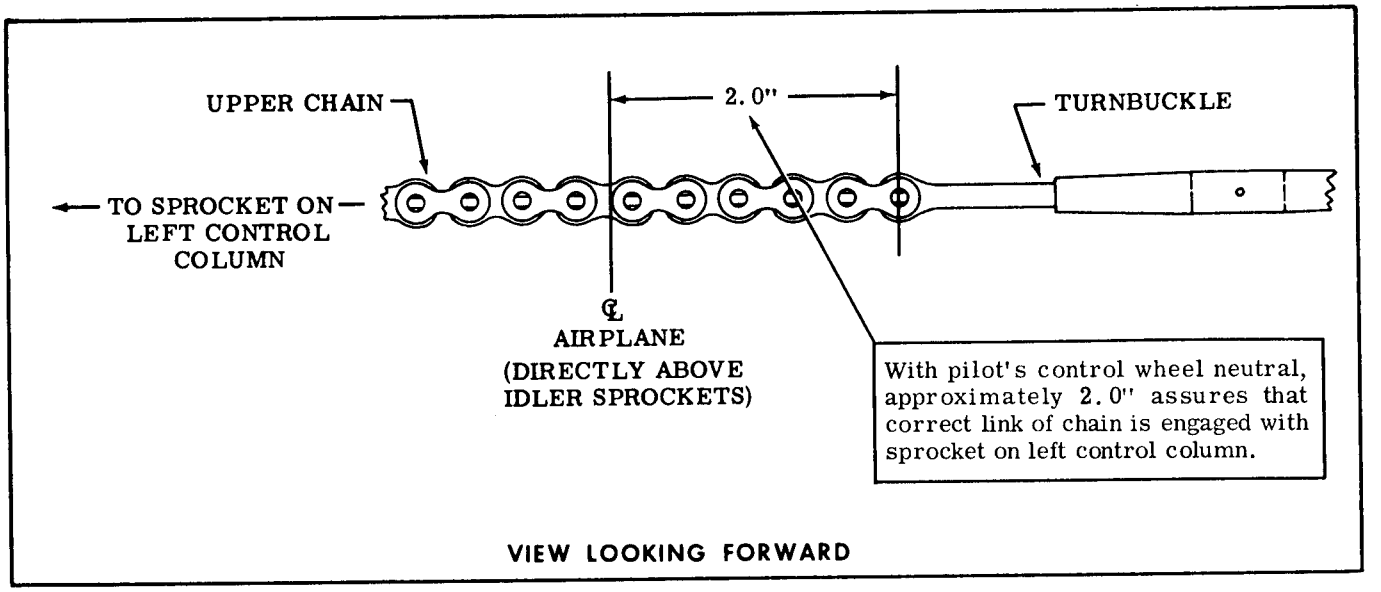

Figure 6-7. Neutral Position for Rigging (182, 1962 & on)

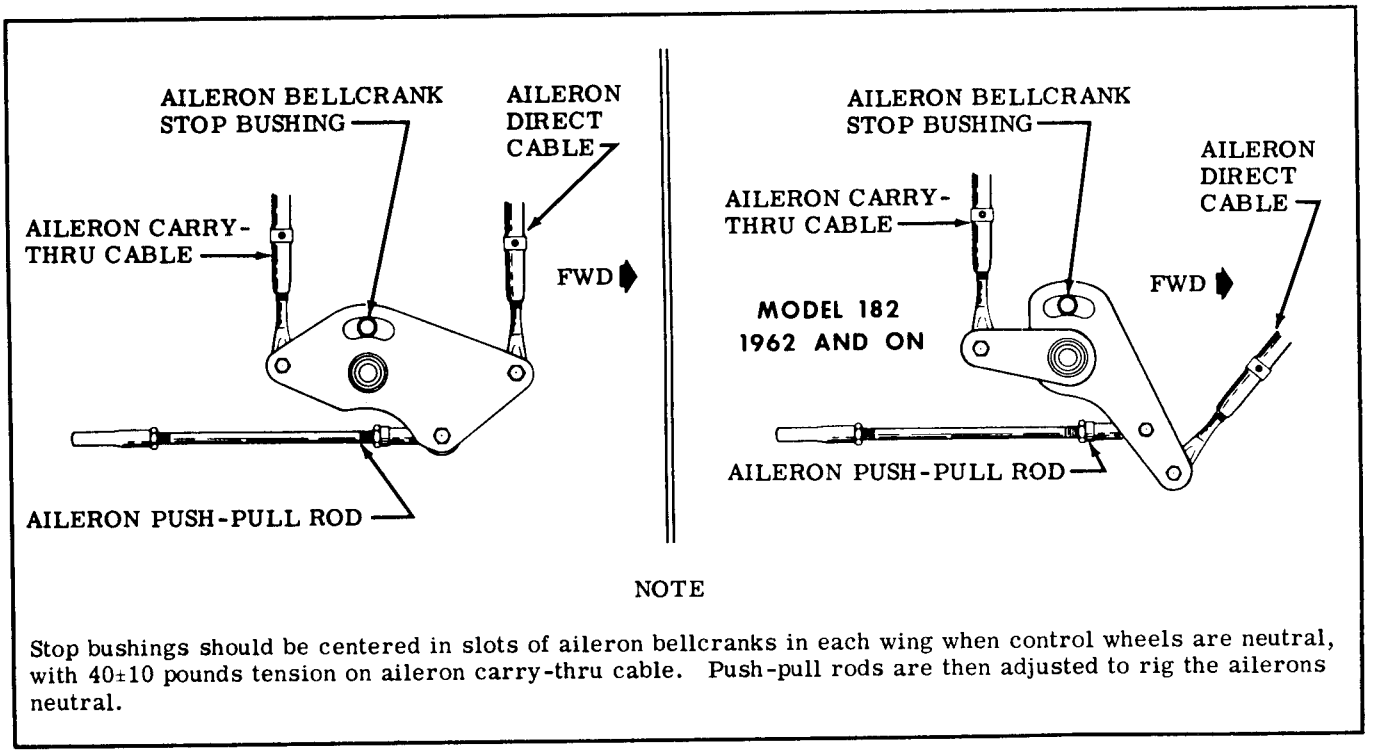

Figure 6-8. Rigging Aileron Bellcranks

wheels are synchronized in neutral when arm (18) is horizontal. Chain (12) should be engaged so that it has an equal number of links extending from sprocket (50).

c. (See figure 6-3.) On the control column, check that upper left chain (24) is engaged with left aileron sprocket (22) in accordance with figure 6-7. With the pilot's control wheel in neutral, adjust turnbuckles (25 and 32) so that both control wheels are synchronized in neutral.

NOTE

On aileron systems containing the control tee, chain tension must be greater than aileron system tension to hold the adjustable end fitting on the spreader bar against its adjusting nut. However, too much chain tension will cause binding. Chains on the control "Y" or control column should have the minimum amount of tension that will remove slack from the chains.

d. Tape a bar across both control wheels to hold them in the neutral position.

e. (See figure 6-8.) Adjust the two turnbuckles at the aileron bellcrank in the right wing and the single turnbuckle at the aileron bellcrank in the left wing so that the bellcrank stop bushings are centered in both bellcrank slots, with 40±10 pounds tension on the aileron carry-thru cable.

f. Adjust push-pull rod at each aileron until the ailerons are neutral with reference to the trailing edge of the wing flaps. Be sure flaps are up when making this adjustment.

g. Safety all turnbuckles by the single-wrap method with .040 inch monel safety wire.

h. Remove bar from control wheels and replace all parts removed for access.

i. Check aileron for correct travel.

WARNING

Be sure ailerons move in the correct direction when operated by the control wheel.

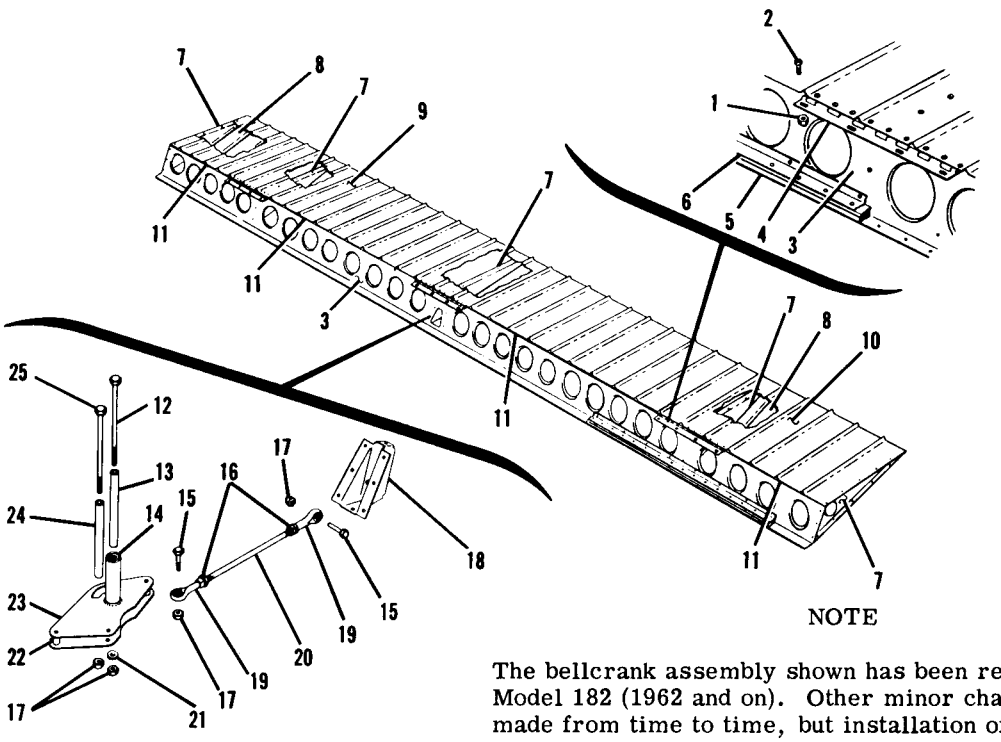

NOTE

The bellcrank assembly shown has been redesigned on the Model 182 (1962 and on). Other minor changes have been made from time to time, but installation of the aileron is the same.

1. Nut
2. Screw
3. Spar
4. Hinge
5. Balance Weight
6. Bracket
7. Rib
8. Lower Inboard Skin
9. Upper Inboard Skin
10. Upper Outboard Skin
11. Spacer Strip
12. Bolt
13. Bushing
14. Bearing
15. Bolt
16. Check Nut
17. Nut
18. Bracket
19. Rod End
20. Push-Pull Rod
21. Washer
22. Bushing
23. Bellcrank Assembly
24. Bellcrank Stop Bushing
25. Bolt

Figure 6-9. Typical Aileron Installation

SECTION 7

FLAP CONTROL SYSTEMS

(See Section 7A for
Model 182, 1962 and on)

TABLE OF CONTENTS Page

FLAP CONTROL SYSTEMS 7-1
Wing Flaps 7-1
Flap Bellcranks 7-1
Flap Handle 7-1
Operational Checkout of Flap System 7-3
Trouble Shooting the Flap System 7-3
Removal of the Flap Lever 7-4
Repair of the Flap Lever 7-4
Installation of the Flap Lever 7-4
Removal of Flap Bellcranks 7-4
Repair of Flap Bellcranks. 7-4
Installation of Flap Bellcranks. 7-4
Removal and Replacement of Cables and Pulleys 7-4
Removal of Flap 7-4
Repair of Flap 7-7
Installation of Flap 7-7
Rigging Flap Control System. 7-7
Installation of Plug Buttons 7-7

7-1. FLAP CONTROL SYSTEMS.

7-2. High-lift flaps are standard equipment on all Cessna single-engine aircraft. On models equipped with a manually operated system, the flap system is operated by a hand lever located between the front seats. A ratchet mechanism, released by a thumb-button on the end of the flap handle, holds the lever in the desired position.

7-3. WING FLAPS are roller-mounted on tracks to enable the flaps to move rearward as they are lowered thus altering the airfoil to provide increased lift and create additional drag. The flaps are of riveted, all-metal construction.

7-4. FLAP BELLCRANKS transmit flap cable motion to a push-pull rod which lowers and raises the flaps. Each flap bellcrank is pivoted on needle-bearings to reduce control force required to actuate the flaps.

7-5. FLAP HANDLE. The flaps are controlled by a flap control handle located between the two front seats. The handle is operated by depressing the thumb-button and moving the handle to the desired flap setting.

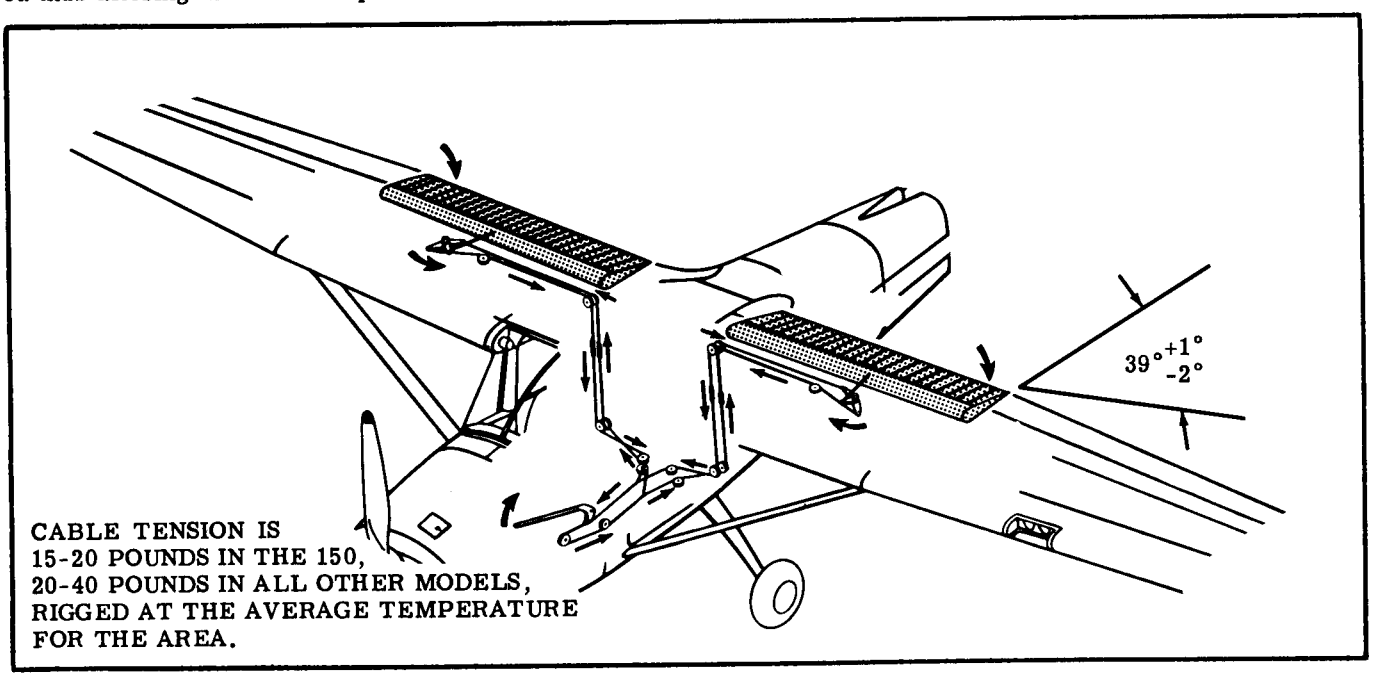

Figure 7-1. Flap System Schematic

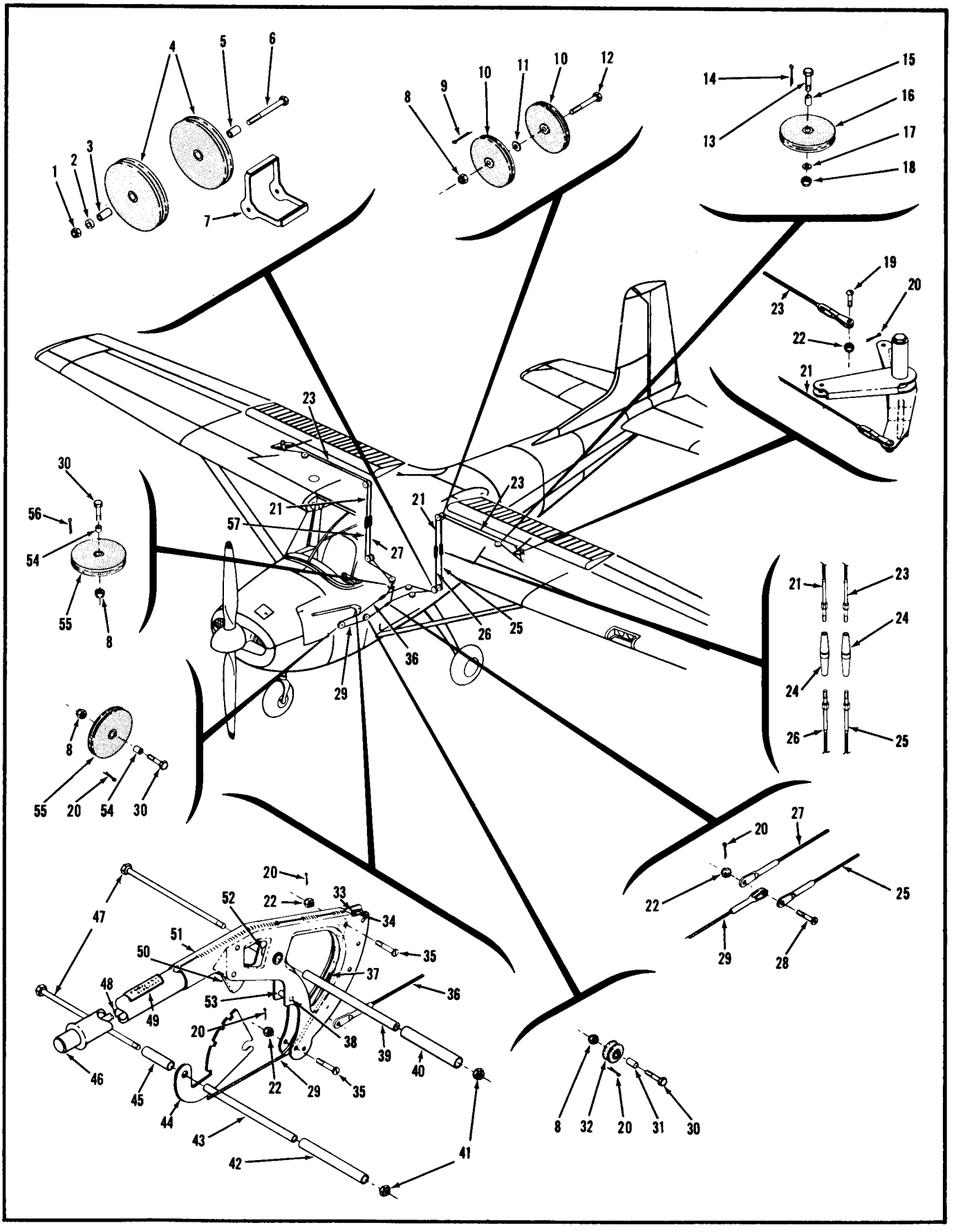

Figure 7-2. Flap Control System (Except 150)

References for Figure 7-2.

1. Nut
2. Spacer
3. Bushing
4. Pulley
5. Bushing
6. Bolt
7. Pulley Guard
8. Nut
9. Cotter Pin
10. Pulley
11. Washer
12. Cotter Pin
13. Bolt
14. Cotter Pin
15. Bushing
16. Pulley
17. Washer
18. Nut
19. Bolt
20. Cotter Pin
21. Cable
22. Nut
23. Cable
24. Turnbuckle Barrel
25. Cable
26. Cable
27. Cable
28. Bolt
29. Cable
30. Bolt
31. Bushing
32. Pulley
33. Cam
34. Spacer
35. Bolt
36. Cable
37. Flap Lever Cam
38. Washer
39. Bushing
40. Spacer
41. Nut
42. Spacer
43. Bushing
44. Ratchet
45. Spacer
46. Button
47. Bolt
48. Latch Rod
49. Placard
50. Latch Assembly
51. Lever Assembly
52. Spacer
53. Spacer
54. Bushing
55. Pulley
56. Cotter Pin
57. Cable

7-6. OPERATIONAL CHECKOUT OF FLAP SYSTEM.

a. Operate flaps through full range of travel, observing for uneven or jumpy motion, binding and lost motion in system.

b. Raise flaps and check to see that they are completely up. Mount an inclinometer on one flap and set to 0°.

c. Raise flap lever to extreme flap down position and check for proper flap angle with inclinometer.

d. Open flap bellcrank access opening and attempt to rock bellcrank to disclose internal bearing play.

e. Examine rollers and tracks for defective parts.

7-7. TROUBLE SHOOTING THE FLAP SYSTEM.

PROBABLE CAUSE	ISOLATION PROCEDURE	REMEDY
BOTH FLAPS FAIL TO LOWER WHEN LEVER IS RAISED.		
Broken or detached forward direct cable.	Open tunnel access cover aft of lever and check direct cable.	Attach or replace cable.
ONE FLAP FAILS TO LOWER.		
Broken or detached direct cable to malfunctioning flap.	Open bellcrank access cover and feel for cable tension.	Attach or replace cable.
BOTH FLAPS FAIL TO RETRACT WHEN FLAP LEVER IS LOWERED.		
Broken or detached forward return cable.	Open tunnel access forward of lever and check forward return cable.	Attach or replace cable.
BINDING IN SYSTEM AS FLAPS ARE RAISED OR LOWERED.		
Cables not riding on pulleys.	Open access covers and observe pulleys.	Route cables correctly over pulleys.
Flap lever binding.	Check lever bearings and ratchet.	Replace defective parts.
Binding in flap bellcrank.	Check bellcrank in motion.	Replace defective bellcrank.
	Remove bellcrank and check needle bearings.	Replace or lubricate bearings.

PROBABLE CAUSE	ISOLATION PROCEDURE	REMEDY
BINDING IN SYSTEM AS FLAPS ARE RAISED OR LOWERED (Cont).		
Broken or binding pulleys.	Check pulleys for free rotation or breaks.	Replace defective pulleys.
Frayed cable.	Check condition of cables.	Replace defective cables.
Flaps binding on tracks.	Observe flap tracks and rollers.	Replace defective parts.
INCORRECT FLAP TRAVEL.		
Incorrect rigging.		Rig flaps correctly.
RELEASE BUTTON STICKS.		
Release mechanism needs lubricating.		Lubricate per figure 2-4.

NOTE

The following paragraphs apply to the flap systems other than the Model 150. Principle of operation is the same for all flap systems; however, routing of cables and access to fuselage components are different in the two-place Model 150. Figure 7-4 may be used as a guide to accomplish maintenance similar to that listed in the following paragraphs.

7-8. REMOVAL OF THE FLAP LEVER ASSEMBLY. (See figure 7-2.)

a. Remove front seats, tunnel carpeting, rear door post facing, and access covers to gain access to flap handle attachment.

b. Disconnect forward direct and return cables from lever assembly by removing attaching bolt and nut.

NOTE

Slack off tension on the cables by loosening turnbuckles at rear door posts.

c. Remove nuts and bolts through bushings (40) and (42). Work lever assembly free of tunnel structure.

7-9. REPAIR OF FLAP LEVER ASSEMBLY consists of the replacement of any defective bearings, spacers, ratchet mechanism and other parts comprising the assembly. Placards on the flap lever should be replaced if they have become illegible.

7-10. INSTALLATION OF THE FLAP LEVER ASSEMBLY may be accomplished by reversing the steps listed in paragraph 7-8, after which the system should be rigged as described in paragraph 7-17.

7-11. REMOVAL OF FLAP BELLCRANKS. (See figure 7-3.)

a. Remove access openings at bellcranks and rear doorpost coverings to gain access to flap cable turnbuckles.

b. Slack off tension on cables, then detach from bellcrank by removing clevis bolts.

c. Disconnect flap push-pull rod by removing attaching nut and bolt.

d. Remove bolt (5) and work bellcrank out through access opening.

NOTE

Seal needle bearings with tape after bellcrank is removed to prevent dirt from entering the bearings.

7-12. REPAIR OF FLAP BELLCRANK is limited to the replacement of internal bushing and needle bearings. Cracked, bent or excessively worn bellcranks should be replaced.

7-13. INSTALLATION OF THE FLAP BELLCRANK. (See figure 7-3.)

a. Position the bellcrank and install bolt (5) through the top of the wing and the bellcrank pivot bushing. Secure bolt with washer and nut.

b. Attach cables with clevis bolts, nuts and cotter pins.

c. Attach flap push-pull rod with bolt and nut.

d. Rig flap system in accordance with paragraph 7-17.

7-13. REMOVAL AND REPLACEMENT OF CABLES AND PULLEYS in the flap system may be accomplished using figure 7-2 as a guide.

7-14. REMOVAL OF FLAP. (See figure 7-3.)

a. Lower flaps and open access covers on top leading edge of flap.

b. Disconnect push-pull rod (11) from the flap by removing nut, washer, and bolt.

c. Remove nut (7) and bolt (25) at each flap track,

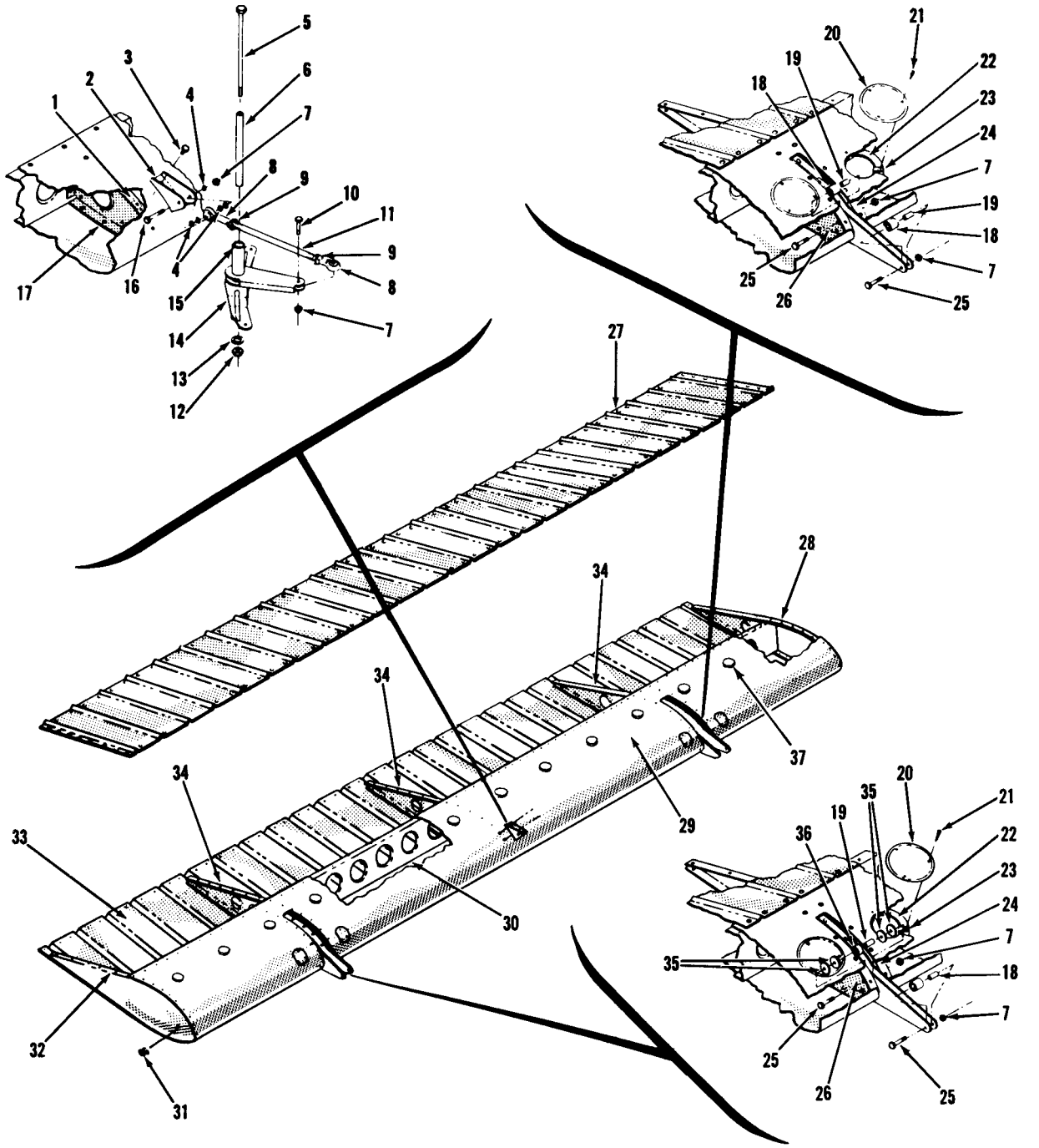

1. Nutplate
2. Bracket
3. Bolt
4. Washer
5. Bolt
6. Bushing
7. Nut
8. Rod End
9. Jam Nut
10. Bolt
11. Rod Assembly
12. Nut
13. Washer
14. Bellcrank Assembly
15. Bearing
16. Bolt
17. Rib Assembly
18. Roller Assembly
19. Bushing
20. Cover Plate
21. Screw
22. Doubler
23. Nut
24. Rib Assembly
25. Bolt
26. Rib Assembly
27. Skin
28. Rib
29. Skin
30. Right Flap Spar
31. Plug Button
32. Rib
33. Skin
34. Rib
35. Spacer
36. Roller Assembly
37. Plug Buttons

Figure 7-3. Flap and Flap Bellcrank Installation

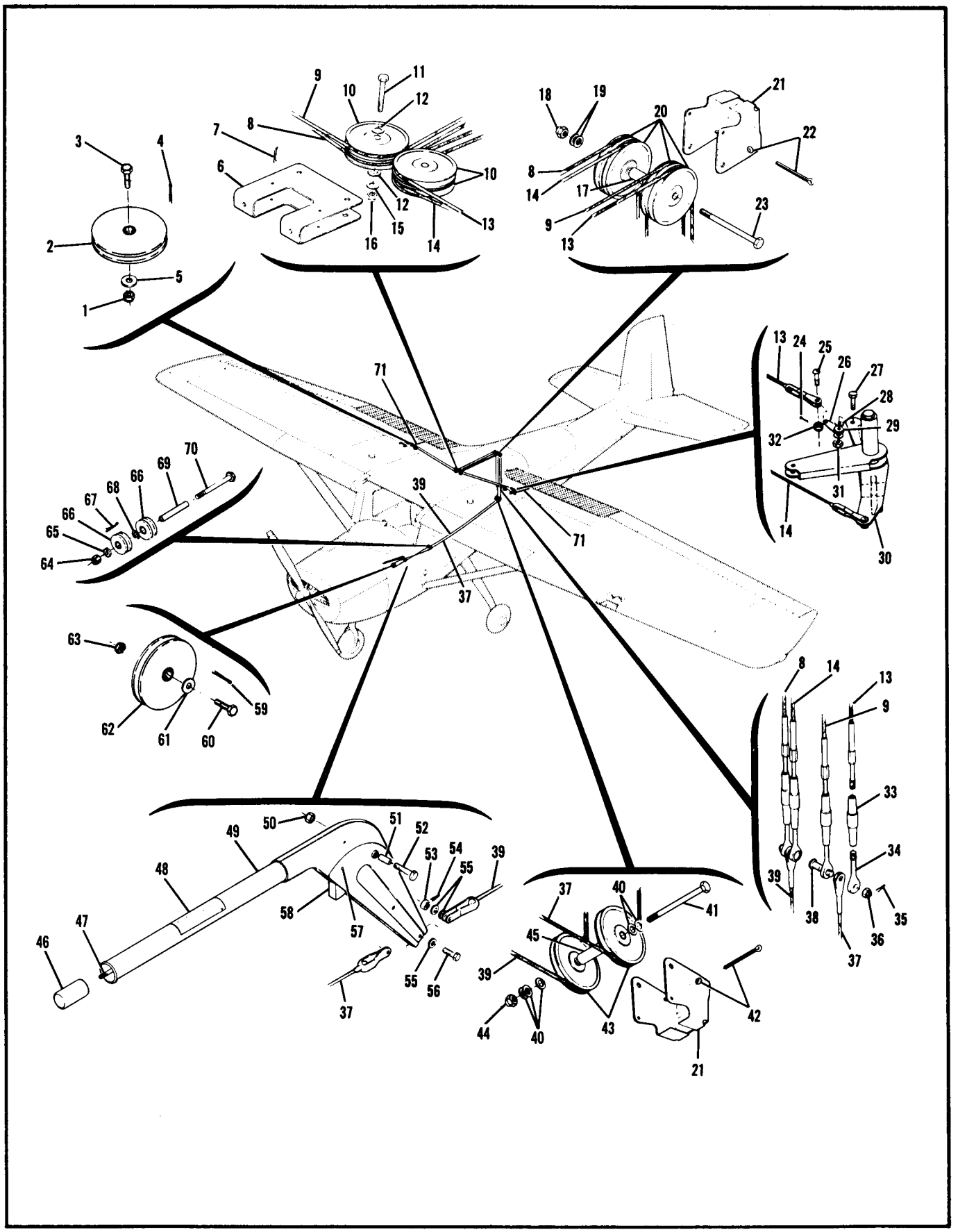

Figure 7-4. Model 150 Flap Control System

References for Figure 7-4

1. Nut
2. Pulley
3. Bolt
4. Cotter Pin
5. Washer
6. Bracket
7. Cotter Pin
8. Right Extend Cable
9. Right Retract Cable
10. Pulley
11. Bolt
12. Washer
13. Left Retract Cable
14. Left Extend Cable
15. Washer
16. Nut
17. Spacer
18. Nut
19. Washer
20. Pulley
21. Bracket
22. Cotter Pin
23. Bolt
24. Cotter Pin
25. Bolt
26. Link
27. Bolt
28. Washer
29. Spacer
30. Bellcrank
31. Nut
32. Nut
33. Turnbuckle Barrel
34. Turnbuckle Eye
35. Cotter Pin
36. Nut
37. Forward Retract Cable
38. Bolt
39. Forward Extend Cable
40. Washer
41. Bolt
42. Cotter Pin
43. Pulley
44. Nut
45. Spacer
46. Release Button
47. Latch Rod
48. Placard
49. Flap Lever
50. Nut
51. Bushing
52. Bolt
53. Nut
54. Cotter Pin
55. Washer
56. Bolt
57. Bushing
58. Latch
59. Cotter Pin
60. Bolt
61. Washer
62. Pulley
63. Nut
64. Nut
65. Washer
66. Pulley
67. Cotter Pin
68. Washer
69. Bushing
70. Bolt
71. Push-pull Rod

then pull flap aft and remove remaining nut and bolt. All washers, rollers and bushings will fall free, and should be saved for reinstallation, as flap is removed.

7-15. REPAIR OF FLAP may be accomplished in accordance with structure repair instructions contained in Section 19.

7-16. INSTALLATION OF FLAP. (See figure 7-3.)

a. Position flap and install flap rollers with attaching parts illustrated.

b. Adjust flap push-pull rod to 8 7/8" between centers of rod end bearings and tighten jamb nuts on rod ends.

c. Secure flap push-pull rod to flap bracket with bolt, washer and nut.

7-17. RIGGING THE FLAP SYSTEM.

NOTE

Before using this procedure it is necessary to loosen the flap cables at the turnbuckles.

a. Make sure flap push-pull rod is set at dimension given in paragraph 7-16, step "b."

b. Set flap handle in the 0° flap position.

c. Tighten the up-cables to a tension of 20-40 pounds (15-20 pounds in the 150).

d. Move the flap handle to the flap full-down position, then tighten the flap-down cables to a tension of 20-40 pounds (15-20 pounds in the 150).

e. Safety the turnbuckles and check that flap push-pull rod jamb nuts are tight.

7-18. INSTALLATION OF NYLON PLUG BUTTONS ON FLAP. Nylon plug buttons, which prevent the flap from chafing the wing trailing edge, may be installed on aircraft which do not have them by the following procedure:

a. The model 150 has 11 plug buttons in each flap. All other models have 12. The plug buttons are installed in the top of the flap (see figure 7-3) 7/8" forward of the edge of the corrugated skin. All dimensions given are to hole centers.

b. Put flap in full down position. Measure 2 1/2" outboard of the inboard end of the flap and mark a hole center 7/8" forward of the corrugated skin edge. Proceeding outboard, mark a hole center every 6" until all 12 hole centers (11 on the 150) are marked. The last hole center should be approximately 1" (2" on the 150) from the outboard end of the flap.

c. Using a No. 17 drill bit (.173"), drill a hole at each location marked. Deburr all holes and clean shavings from within flap.

d. Install an S-1093-1 nylon plug button in each hole. The plug buttons are available from the Cessna Spare Parts Department.

This page intentionally left blank.

SECTION 7A

FLAP CONTROL SYSTEM

(Model 182, 1962 & on)

TABLE OF CONTENTS Page

FLAP CONTROL SYSTEM 7A-1
Wing Flaps 7A-1
Flap Drive Pulley Assemblies 7A-1
Transmission 7A-1
Electric Motor. 7A-1
Flap Switch 7A-1
Flap Position Transmitter 7A-1
Operational Checkout of Flap System. . . . 7A-1
Trouble Shooting the Flap System 7A-2
Removal of Flap Position Transmitter . . . 7A-3
Adjustment of Flap Position Transmitter. 7A-3
Installation of Flap Position Transmitter . . 7A-3
Removal of Transmission and Motor Assembly 7A-3
Repair of Transmission and Motor Assembly 7A-3
Installation of Transmission and Motor Assembly 7A-3
Removal of Drive Pulley Assemblies. . . . 7A-3
Repair of Drive Pulley Assemblies. 7A-3
Installation of Drive Pulley Assemblies. . . 7A-3
Removal, Repair & Installation of the Flap . 7A-3
Replacement of Flap Cables and Pulleys . . 7A-3
Rigging the Flap System 7A-3

7A-1. FLAP CONTROL SYSTEM. (Model 182, 1962 & on.)

7A-2. The flap system on the Model 182 (1962 and on) is electrically actuated. The system consists of an electric motor driving a transmission that operates the right flap drive pulley which is linked to the right flap. The right and left drive pulleys are interconnected by cables to insure duplicate motion of both flaps. The flap motor is controlled by a switch mounted in the instrument panel. Flap position is transmitted electrically to a flap position indicator.

7A-3. WING FLAPS are roller-mounted on tracks to enable the flaps to move rearward as they are lowered, thus altering the airfoil to provide increased lift and create additional drag. The flaps are of riveted, all-metal construction.

7A-4. FLAP DRIVE PULLEY ASSEMBLIES transmit motion to push-pull rods which lower and raise the flaps. These drive pulley assemblies consist of a bellcrank welded to a common shaft with the flap cable attach pulleys. The right drive pulley is connected to a transmission which is driven by an electric motor. The transmission directly actuates the right flap drive pulley. This motion is simultaneously transmitted through the flap interconnecting cables to the left flap drive pulley.

7A-5. TRANSMISSION. A transmission is connected to and actuates the right flap drive pulley. This transmission converts the rotary motion of the electric motor to the push-pull motion needed to operate the flaps. The transmission will free-wheel at each end of its stroke; therefore, it cannot be damaged by overrunning when lowering or raising the flaps and no adjustments or limit switches are necessary. The transmission has a stroke of 5.76 inches and a static load thrust of 750 lbs push or pull.

7A-6. ELECTRIC MOTOR. The electric motor used to actuate the flap system is a 12-volt, reversible, full shunt-wound motor. The motor mounts directly on the side of the transmission, thus becoming an assembly with the transmission for installation and removal purposes. This assembly is called a transmission and motor assembly.

7A-7. FLAP SWITCH. The flap switch is a three-position, double-throw switch, spring-loaded to the center OFF position.

7A-8. FLAP POSITION TRANSMITTER. The flap position transmitter is mechanically connected to the right flap drive pulley and electrically transmits position to the flap position indicator.

7A-9. OPERATIONAL CHECKOUT OF FLAP SYSTEM.

a. Operate flaps through full range of travel, observing for uneven or jumpy motion, binding and lost motion in system. Make sure flaps are moving together through full range of travel.

b. Deliberately overrun motor at each end of stroke to make sure transmission is free wheeling.

c. Check to see that flaps are not sluggish in operation. In flight at 100 mph, indicated airspeed, the flaps should take approximately 8.7 seconds to fully extend and 7.6 seconds to retract. On the ground with engine running the flaps take approximately 6.5 seconds to extend or retract.

d. Raise flaps and check to see that they are completely up. Check flap position indicator to see that it reads 0°. Mount an inclinometer on one flap and set to 0°.

e. Lower flaps to extreme down position and check flap angle with inclinometer. Down angle is 40°+1°-2°.

f. Open flap drive pulley access opening and attempt to rock drive pulley assembly to disclose internal bearing play.

g. Examine rollers and tracks for defective parts.

7A-10. TROUBLE SHOOTING THE FLAP SYSTEM.

PROBABLE CAUSE	ISOLATION PROCEDURE	REMEDY
BOTH FLAPS FAIL TO MOVE.		
Popped circuit breaker.	Check circuit breaker.	Reset circuit breaker.
Defective switch.	Place jumper across switch.	Replace switch.
Defective motor.	Remove and bench test motor.	Replace motor.
Broken or disconnected wires.	Run continuity check of wiring.	Connect or repair wiring.
Defective or disconnected transmission.	Check to see transmission is connected to flap system. If connected, remove for bench test.	Connect or replace transmission.
LEFT FLAP FAILS TO MOVE.		
Disconnected or broken cable.	Check cable tensions.	Connect or replace cable.
Disconnected push-pull rod.	Check push-pull rod attachment.	Attach push-pull rod.
BINDING IN SYSTEM AS FLAPS ARE RAISED AND LOWERED.		
Cables not riding on pulleys.	Open access covers and observe pulleys.	Route cables correctly over pulleys.
Bind in drive pulleys.	Check drive pulleys in motion.	Replace drive pulley.
Broken or binding pulleys.	Check pulleys for free rotation or breaks.	Replace defective pulleys.
Frayed cable.	Check condition of cables.	Replace defective cable.
Flaps binding on tracks.	Observe flap tracks and rollers.	Replace defective parts.
INCORRECT FLAP TRAVEL.		
Incorrect rigging.		Rig flaps correctly.

7A-11. REMOVAL OF FLAP POSITION TRANSMITTER. (See figure 7A-1.)

a. Remove access covers from bottom of right wing below right drive pulley (6).

b. Remove two bolts (10) which secure flap position transmitter (11).

c. Remove cotter pin (14) and pin (13) which secure wire rod (12) to arm (15).

d. Disconnect two wires at the quick disconnects and remove the transmitter from the wing.

7A-12. ADJUSTMENT OF FLAP POSITION TRANSMITTER. (See figure 7A-1.) Slotted holes in the transmitter bracket are provided for adjustment. See paragraph 7A-22, step j for adjustment procedure. Also, the wire rod (12) which connects the transmitter to the right hand drive pulley may be bent slightly for minor adjustment. The transmitter is factory calibrated and should be replaced if error is excessive.

7A-13. INSTALLATION OF FLAP POSITION TRANSMITTER may be accomplished by reversing the steps listed in paragraph 7A-11 after which it should be adjusted as described in paragraph 7A-22, step j.

7A-14. REMOVAL OF TRANSMISSION AND MOTOR ASSEMBLY. (See figure 7A-1.)

a. The transmission (3), motor (1), and tube (4) are removed as one assembly if standard gas tanks are installed. With long range tanks, it is necessary to remove motor from transmission before removing from wing and assembling them after putting them in the wing.

b. Remove access covers from bottom of right hand wing under the drive pulley (6) and motor (1).

c. Remove bolt and nut securing tube (4) to drive pulley (6).

d. Remove bolt, washer and nut securing transmission (3) to hinge assembly (2).

e. Disconnect three wires at quick disconnects and remove screw securing ground wire. Remove assembly from wing.

7A-15. REPAIR OF TRANSMISSION AND MOTOR ASSEMBLY. (See figure 7A-1.) Repair of the transmission and motor assembly consists of replacement of the motor (1), transmission (3), or the tube(4).

7A-16. INSTALLATION OF TRANSMISSION AND MOTOR ASSEMBLY. The installation of the transmission and motor assembly may be accomplished by reversing the steps of paragraph 7A-14. Rig per step f of paragraph 7A-22.

7A-17. REMOVAL OF DRIVE PULLEY ASSEMBLIES. (See figure 7A-1.)

NOTE

The right hand drive pulley (6) must be removed to detach flap transmitter arm (15) from drive pulley assembly.

a. Remove the access covers under right hand drive pulley (6).

b. Remove bolts and nuts securing push-pull rod (7) to right hand drive pulley (6) and lower flap gently.

c. Remove bolt and nut securing tube (4) to drive pulley (6).

d. Remove pin (13) to disconnect flap position transmitter rod (12) from arm (15).

e. Disconnect turnbuckles (21 and 23) and detach cables (8 and 9) from drive pulley by removing bolts and pins.

f. Remove bolt and nut securing drive pulley (6) and remove pulley from wing.

g. To remove left hand drive pulley (22), perform steps a, b, e, and f on left side.

7A-18. REPAIR OF DRIVE PULLEY ASSEMBLIES. Repair of drive pulley assemblies is limited to replacement of needle bearings.

7A-19. INSTALLATION OF DRIVE PULLEY ASSEMBLIES may be accomplished by reversing the steps in paragraph 7A-17 and rigging per paragraph 7A-22. Cables may be attached to drive pulleys before installing them in wings.

NOTE

The transmitter arm (15) must be attached to the right hand drive pulley (6) before installing the drive pulley in the wing.

7A-20. REMOVAL, REPAIR AND INSTALLATION OF THE FLAP may be accomplished by referring to paragraphs 7-14, 7-15 and 7-16 respectively of the preceding Section.

7A-21. REPLACEMENT OF FLAP CABLES AND PULLEYS. (See figure 7A-1.) Replacement of flap cables and pulleys may be accomplished using figure 7A-1 as a guide. Refer to paragraph 7A-22 for attachment instructions for cables.

NOTE

To ease rerouting of cables, a length of wire may be attached to the end of the cable before it is withdrawn from the aircraft. Leave the wire in place, routed through the structure; then attach it to the new cable and use it to pull cable into place.

7A-22. RIGGING THE FLAP SYSTEM. (See figure 7A-1.)

NOTE

Before using this procedure it is necessary to loosen or disconnect the flap cables at the turnbuckles (21 and 23).

a. If cables are not connected to drive pulleys, the tube (4), the left and right push-pull rods (7), and the flap transmitter arm must be disconnected before installing the cables. If drive pulleys are not installed, attach cables before installing drive pulleys in wings.

b. Connect the 3/32" retract cable (9) to the forward side of the right hand drive pulley (6) with the pin and cotter pin. Connect the 3/32" retract cable (9) to the aft side of the left drive pulley (22) with bolt, nut and

cotter pin.

c. Connect the 1/8" direct cable (8) to the aft side of the right hand flap drive pulley (6) and to the forward side of the left hand drive pulley (22) with bolt, nuts, and cotter pins.

d. Connect flap position transmitter rod (12) to right hand flap drive pulley arm (15) with pin and cotter pin.

e. Adjust push-pull rods (7) to 8 53/64" between center of rod end bearings and tighten jam nuts on both ends. Install push-pull rods on flaps and on drive pulleys (6 and 22).

NOTE

Test flaps with hand to see that flaps go down together. If they will not, cables are incorrectly installed at drive pulleys. Also check to see that right hand drive pulley rotates in a clockwise direction, as viewed from below, when flaps are lowered.

f. Push right flap full down against the stops. Loosen set screw (17) in tube (4) on transmission assembly (3). Screw tube (4) in or out to align with hole in drive pulley (6). Tighten set screw (17) and attach tube (4) to drive pulley (6).

g. With flaps in full down position, tighten turnbuckle (21) on direct cable (8) until 20-40 lbs. tension is obtained and safety turnbuckles.

NOTE

Rig all tensions to the average temperature for the area.

h. Move flaps to full up position and tighten turnbuckle (23) on retract cable (9) until 20-40 lbs. tension is obtained on cable and safety turnbuckle.

i. Raise flaps to full up position and mount an inclinometer on one flap and set to 0°. Lower flaps completely and check flap angle with the inclinometer. Full down angle is 40°+1°-2°.

j. Raise flaps to full up position. With master switch still on, loosen the two retaining bolts (10) in the slotted holes of the flap position transmitter bracket (11) and slide transmitter inboard or outboard as necessary to make the flap position indicator read 0°. Tighten retaining bolts in bracket.

k. Perform operational checkout of flap system as described in paragraph 7A-9.

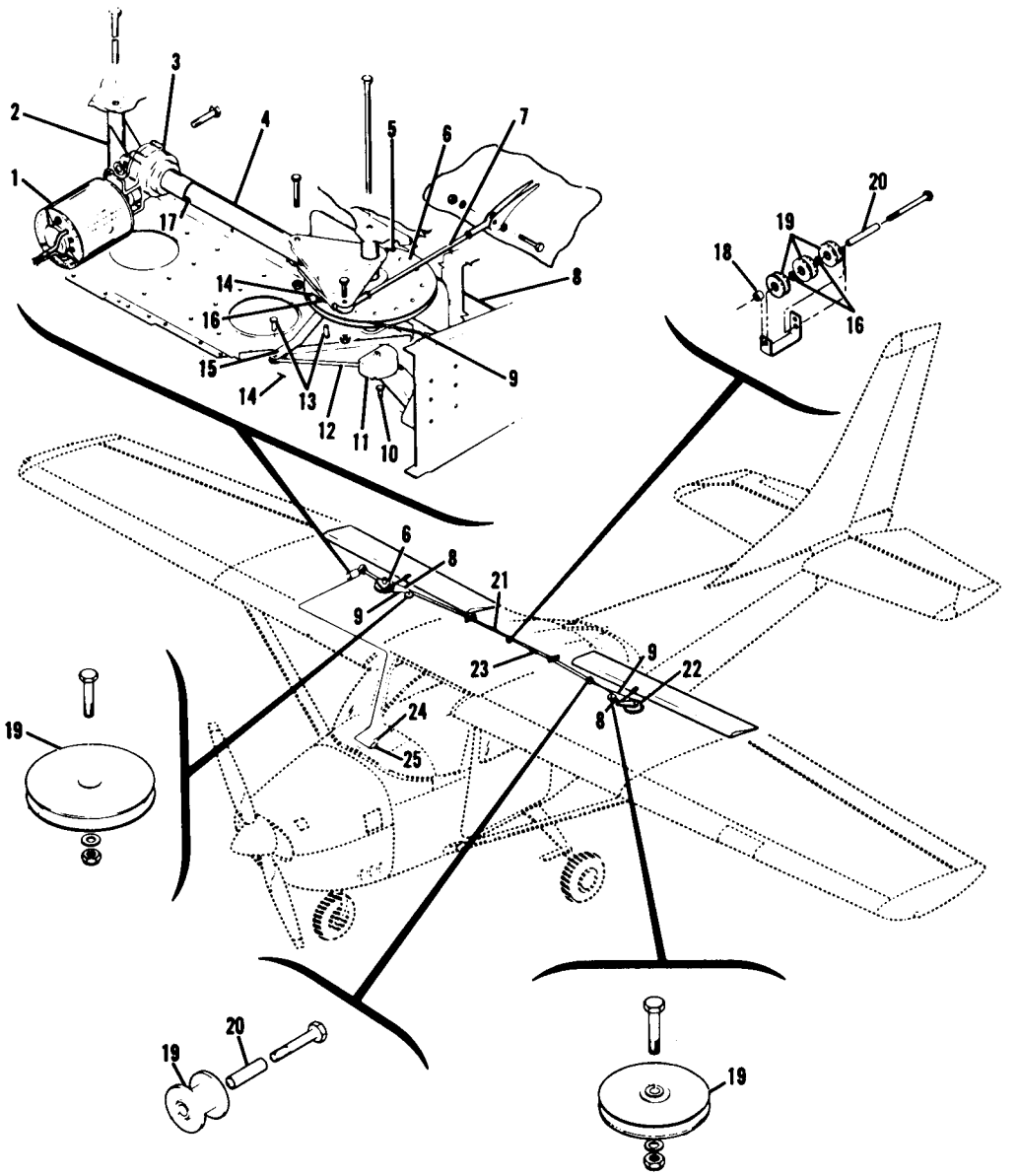

NOTE

This system is typical for the flap system used on the Model 182 (1962 and on).

1. Motor
2. Hinge Assembly
3. Transmission
4. Tube Assembly
5. Bolt
6. Drive Pulley Assembly
7. Push - Pull Rod
8. Direct Cable
9. Retract Cable
10. Bolt
11. Flap Position Transmitter
12. Wire Rod
13. Pin
14. Cotter Pin
15. Flap Transmitter Arm
16. Washer
17. Set Screw
18. Spacer
19. Pulley
20. Bushing
21. Turnbuckle
22. Drive Pulley Assembly
23. Turnbuckle
24. Flap Position Indicator
25. Flap Switch

Figure 7A-1 Flap Control System

This page intentionally left blank.

SECTION 8

ELEVATOR CONTROL SYSTEMS

TABLE OF CONTENTS Page

ELEVATOR CONTROL SYSTEM 8-1
Trouble Shooting 8-1
REPLACEMENT OF COMPONENTS 8-5
Elevators 8-5
Control Column 8-5
Aft Bellcrank - 180, 182 and 185. 8-5
Aft Bellcrank - 150, 172 and 175 8-5
Forward Bellcrank 8-6
Cables 8-6
RIGGING 8-6

8-1. ELEVATOR CONTROL SYSTEM.

8-2. Through action of the elevator control system, forward motion of the control wheel causes a down-motion of the elevators, backward movement of the wheel causes an up movement of the elevators. The elevator control system is composed of bellcranks, push-pull rods, and flexible cables. Elevator travel stops limit travel to a specified angle. These travel stops are located at the root of the fin aft bulkhead on the Model 150, 172 and 175. On the 180, 182 and 185 the travel stops are square, off-center stops located in the elevator rear bellcrank bracket.

8-3. TROUBLE SHOOTING.

PROBABLE CAUSE	ISOLATION PROCEDURE	REMEDY
NO RESPONSE TO CONTROL WHEEL FORE-AND-AFT MOVEMENT.		
Forward or aft push-pull tube disconnected.	Check visually.	Attach push-pull tube correctly.
Cables disconnected.	Check visually.	Attach cables correctly.
BINDING OR JUMPY MOTION FELT IN MOVEMENT OF ELEVATOR SYSTEM.		
Defective forward bellcrank pivot bearing.	Check bellcrank; move to check for play or binding.	Replace bellcrank.
Defective rear bellcrank pivot bearing.	Check bellcrank; move to check for play or binding.	Replace bellcrank.
Cables slack.	Check for correct tension.	Adjust to correct tensions.
Cables not riding correctly on pulleys.	Check cable routing.	Route cables correctly over pulleys.
Defective elevator hinges.	Move elevator by hand, checking hinges.	Replace defective hinges.
Ball socket on instrument panel too tight.	Disconnect universal joint and check binding at panel.	Add washers as necessary between forward socket half and instrument panel.
Clevis bolts too tight.	Check bolt binding.	Readjust to eliminate bolt binding.
ELEVATOR FAILS TO ATTAIN PRESCRIBED TRAVEL.		
Stops incorrectly set.		Rig per paragraph 8-11 or 8-12.
Cables unevenly tightened.		Rig per paragraph 8-11 or 8-12.

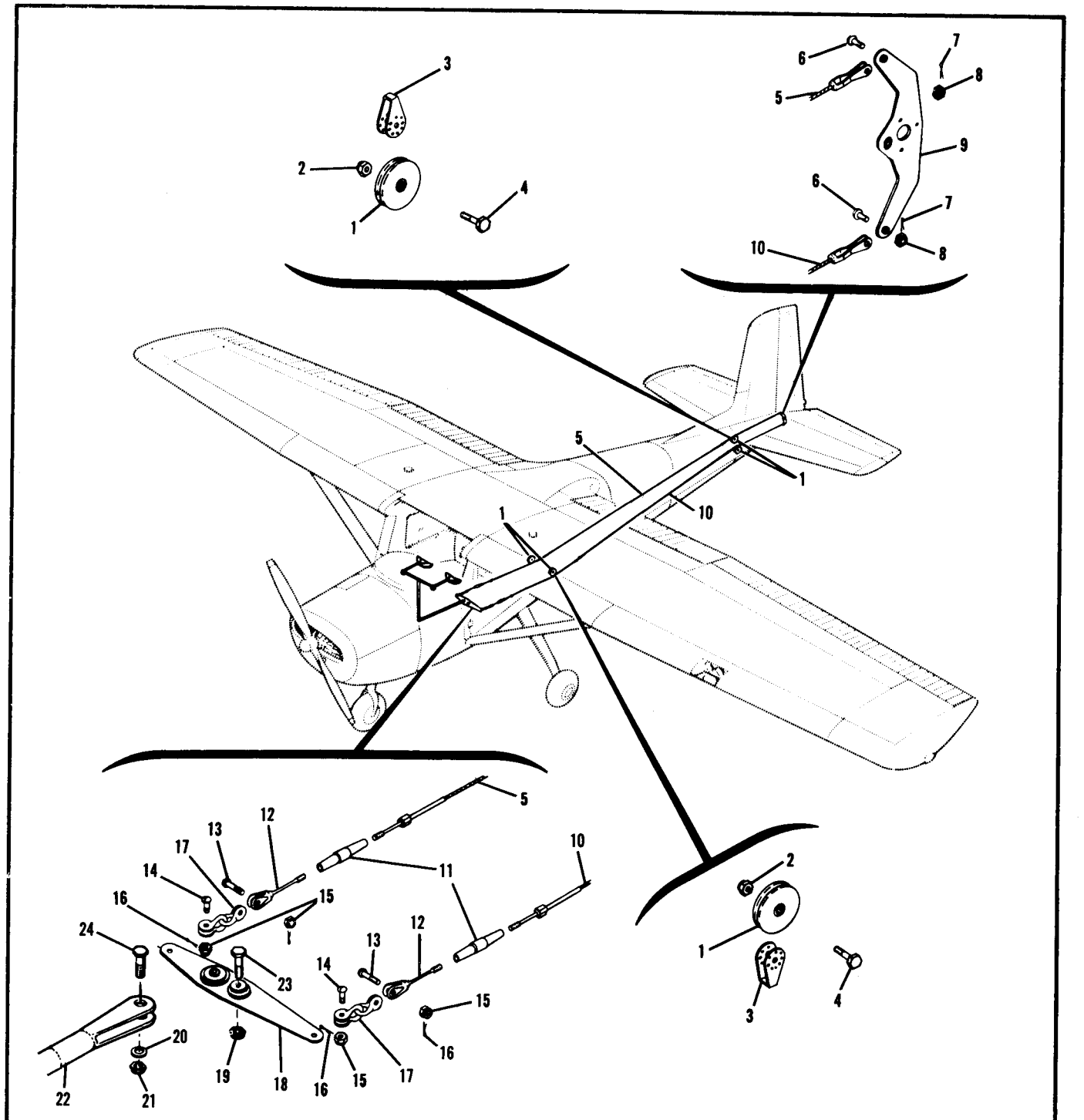

1. Pulley
2. Nut
3. Guard
4. Bolt
5. Up Cable
6. Bolt
7. Cotter Pin
8. Nut
9. Elevator Bellcrank
10. Down Cable
11. Turnbuckle Barrels
12. Cable Fork
13. Bolt
14. Clevis Bolt
15. Nut
16. Cotter Pin
17. Link
18. Elevator Foward Bellcrank
19. Nut
20. Washer
21. Nut
22. Push-pull Tube
23. Bolt
24. Bolt

Figure 8-1. Model 150 Elevator Control System

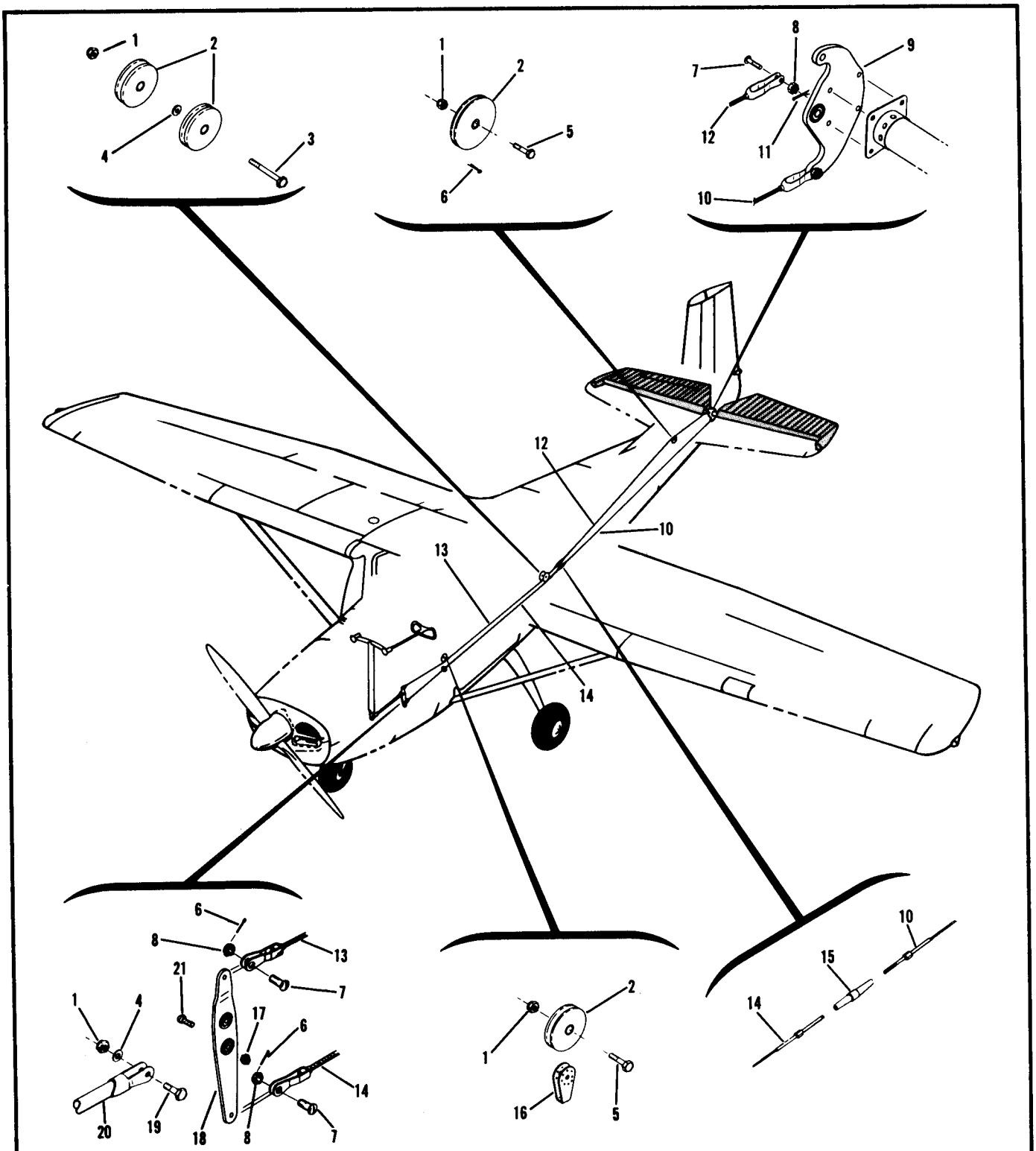

1. Nut
2. Pulleys
3. Bolt
4. Washer
5. Bolt
6. Cotter Pin
7. Clevis Bolt
8. Nut
9. Elevator Bellcrank
10. Rear Down Cable
11. Cotter Pin
12. Rear Up Cable
13. Forward Up Cable
14. Forward Down Cable
15. Turnbuckle Barrel
16. Cable Guard
17. Nut
18. Forward Bellcrank
19. Bolt
20. Elevator Push-pull Rod
21. Bolt

Figure 8-2. Model 175 and 172 Elevator Control System

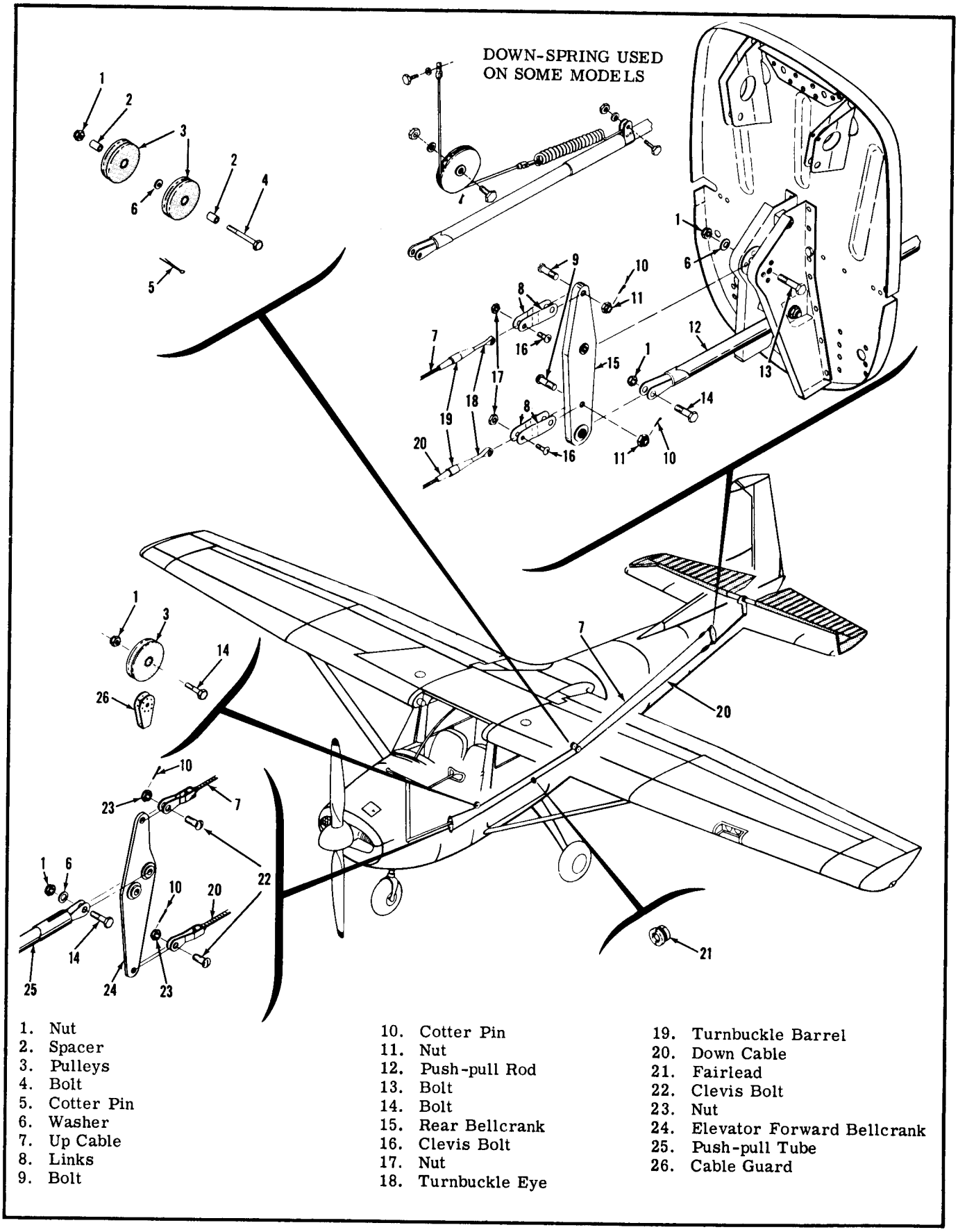

1. Nut
2. Spacer
3. Pulleys
4. Bolt
5. Cotter Pin
6. Washer
7. Up Cable
8. Links
9. Bolt
10. Cotter Pin
11. Nut
12. Push-pull Rod
13. Bolt
14. Bolt
15. Rear Bellcrank
16. Clevis Bolt
17. Nut
18. Turnbuckle Eye
19. Turnbuckle Barrel
20. Down Cable
21. Fairlead
22. Clevis Bolt
23. Nut
24. Elevator Forward Bellcrank
25. Push-pull Tube
26. Cable Guard

Figure 8-3. Models 180, 182 (except 1962 and on) and 185 Elevator Control System

8-4. REPLACEMENT OF ELEVATOR SYSTEM COMPONENTS.

8-5. ELEVATORS.

a. Remove the bolts attaching each elevator to the elevator bellcrank.

b. On the Model 185, 1962 and on, disconnect the tail wheel anti-swiveling lock cable from the elevator end plates.

c. If a right elevator that has a trim tab attached to it is being removed, disconnect the trim tab push-pull tube at the actuator. See that the trim system is not moved and the actuator screw is not rotated while the trim tab is disconnected, or it will be necessary to rerig the system at installation.

d. Remove bolts at each elevator hinge point and remove the elevator.

e. Reverse the above steps to install the elevators.

8-6. CONTROL COLUMN removal is described in paragraphs 6-10, 6-11 or 6-12.

8-7. AFT BELLCRANK - 180, 182 AND 185.

a. On all tricycle gear airplanes, position a support stand to prevent the tailcone from dropping when a man works in the tailcone.

b. Loosen elevator cables at turnbuckles, then disconnect cables from rear bellcrank.

c. Disconnect the elevator down-spring if one is installed.

d. Remove bolt securing rear push-pull tube to bellcrank. Remove bellcrank by removing bolt attaching it to support bracket.

e. Reverse the above steps to install the bellcrank. Check elevator rigging.

NOTE

The elevator pylon, to which each elevator is attached, can be removed by removing the stinger, disconnecting the push-pull tube, removing the bolts attaching the elevators to the pylon, and removing the pylon pivot bolt.

8-8. AFT BELLCRANK - 150, 172 AND 175.

a. Remove rudder and elevators on the Model 150.

b. Remove the left elevator on Models 172 and 175.

c. Loosen elevator cable turnbuckles, then disconnect elevator cables from rear elevator bellcrank.

d. Remove pivot bolt and work bellcrank free of the airplane. On the Model 150, it may be necessary to remove one of the stabilizer attaching bolts for clearance when removing the bellcrank pivot bolt.

e. Install the aft bellcrank by reversing the above steps. Check elevator rigging.

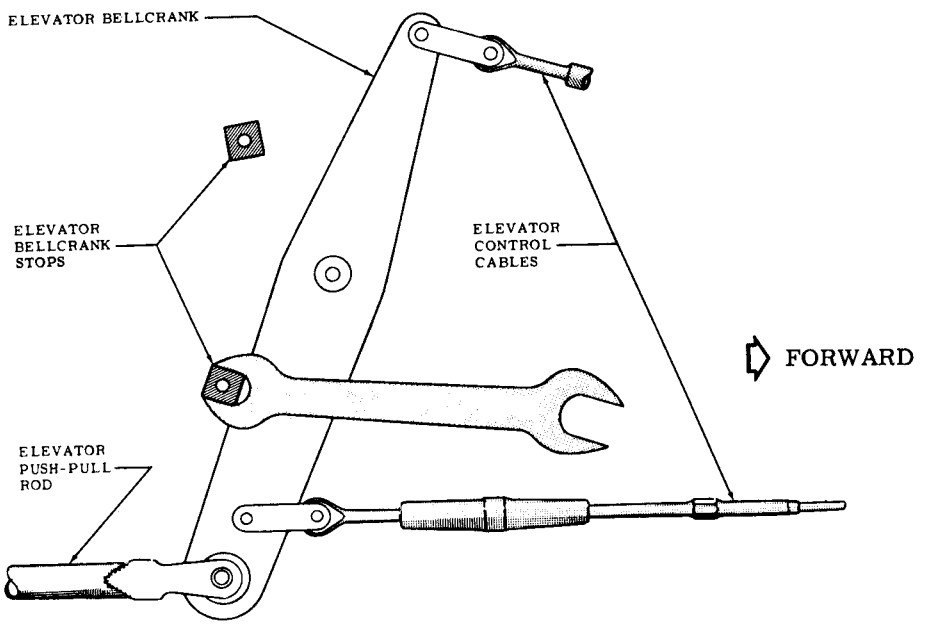

NOTE

The holes are drilled off center in the bellcrank stops to provide elevator travel adjustments. Every 90° of rotation of the bellcrank stop provides approximately 1° of change in control surface travel.

Figure 8-4. Elevator Stops on 180 Series Airplanes

8-9. FORWARD BELLCRANK. (All models except Model 182, 1962 and on. Refer to paragraph 6-12 for removal of forward components of 182, 1962 and on.)

NOTE

Access to the forward bellcrank on the Model 150 is provided through large access holes in the seat pans. On other models, remove the front seats, tunnel cover plate, and access plates beneath the bellcrank, on the underside of the fuselage.

a. Loosen elevator cables at turnbuckles, then remove bolts attaching the cables to the bellcrank.
b. Remove bolt securing push-pull tube to bellcrank.
c. Remove pivot bolt and remove bellcrank.
d. To install the bellcrank, reverse the above steps. Check elevator rigging.

8-10. CABLES in the elevator control systems can be removed and replaced more easily if a guide wire is attached to one end and the cable pulled out from the opposite end, leaving the guide wire in place to aid in installation. Pulleys or cable guards must be removed before cables can be removed. When cables are installed be sure to rig the system properly, re-safety all turnbuckles, and reinstall all cable guards. Make certain that cables have not been crossed and elevators move in the correct direction in response to control wheel movement.

8-11. RIGGING. (All Models, except 182, 1962 and on.)
a. Set elevator stops to attain the elevator travels listed below relative to the stabilizer.

NOTE

On aircraft with adjustable stabilizer, move stabilizer full down before setting elevator stops.

MODEL	DOWN TRAVEL	UP TRAVEL
150	15° ± 1°	25° ± 1°
172 & 175	26° ± 1°	$28^{\circ}\ ^{+1^{\circ}}_{-0^{\circ}}$
180, 182 & 185	23° ± 1°	25° ± 1°

NOTE

Models 150, 172 and 175 are equipped with elevator stop bolts, the heads of which contact the elevator bellcrank to limit travel. The bolts may be screwed in or out to attain correct travel. On 180, 182 and 185 airplanes, the elevator stops are four-sided bushings drilled off-center so that they may be turned to any one of four positions to change travel limits. Each 90-degree rotation of the stop changes elevator travel by approximately 1°.

b. Tighten cables to 20 to 40 pounds tension, adjusting turnbuckles so the control column clears instruments in the full aft position and clears the firewall in the full forward position.

NOTE

Model 180, 182 (except 1962 and on) and 185 airplanes have an additional stop bolt located at the forward bellcrank. This stop bolt must be adjusted not to interfere with attaining full elevator travel at the rear bellcrank stops. The primary purpose of the forward stop is to furnish a positive stop so that excessive back pressure on the elevator control will not stretch cables and allow the control tee to contact instruments.

c. On those aircraft equipped with an elevator down-spring, adjust the down-spring so it does not create any force until the elevator passes through the neutral (streamlined) position with the stabilizer full down.
d. Check over the entire system for binding, for correct direction of movement in response to control wheel movement, and for correct safetying.

8-12. RIGGING. (Model 182, 1962 and on.) (See figure 8-5.)
a. Set elevator stops to attain 17° ± 1° down travel and 26° ± 1° up travel, relative to stabilizer.

NOTE

The elevator stops are four-sided bushings drilled off-center so that they may be turned to any one of four positions to change travel limits. Each 90-degree rotation of the stop changes elevator travel by approximately 1°. Refer to figure 8-4.

b. Lock the control tube in neutral with the control lock and adjust the elevator to align with the stabilizer by using the turnbuckles on the elevator cables in the aft tailcone. Tighten turnbuckles on elevator cables to 20 to 40 lbs. tension.
c. Adjust the elevator down-spring so it does not create any force until the elevator passes through the neutral (streamlined) position.
d. Check over the entire system for binding, for correct direction of movement in response to control wheel movement, and for correct safetying.

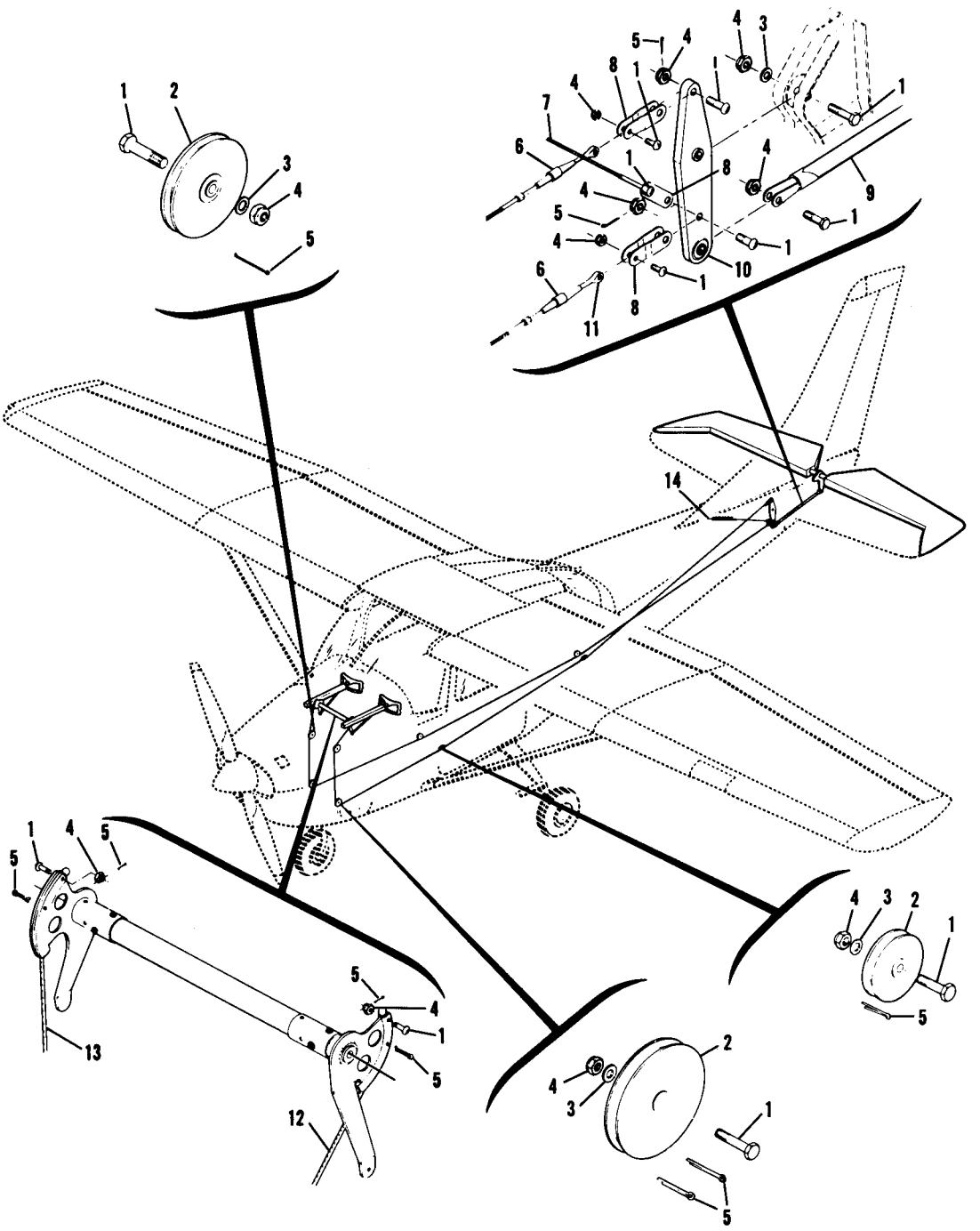

1. Bolt
2. Pulley
3. Washer
4. Nut
5. Cotter Pin
6. Barrel
7. Elevator Down Spring Cable
8. Link
9. Push-pull Tube
10. Elevator Bellcrank
11. Eye
12. Left Hand Elevator Cable
13. Right Hand Elevator Cable
14. Elevator Down Spring

Figure 8-5. Model 182 (1962 and on) Elevator Control System

This page intentionally left blank.

SECTION 9

ELEVATOR TRIM TAB CONTROL SYSTEMS

TABLE OF CONTENTS Page

ELEVATOR TRIM TAB CONTROL SYSTEM . . 9-1
Trouble Shooting 9-2
Removal 9-2
Installation 9-4
Rigging 9-4

9-1. ELEVATOR TRIM TAB CONTROL SYSTEM.

NOTE

The Models 150, 172, 175 and 182 (1962 and on) incorporate an elevator trim tab control system. On the 180, 182 (prior to 1962), and 185, stabilizer attitude is adjustable providing the longitudinal trim afforded by the elevator trim system in the other models.

9-2. A trim wheel, roller-chain and cable linkage and a screwjack actuator comprise the control system which affords flight adjustment of the elevator tab located on the right elevator. Adjustment of the trim wheel relieves control wheel pressure for any predetermined flight attitude. A position indicator in the tab wheel mechanism indicates nose attitude of the aircraft. Forward rotation of the wheel trims the nose down, and aft movement of the wheel trims the nose up.

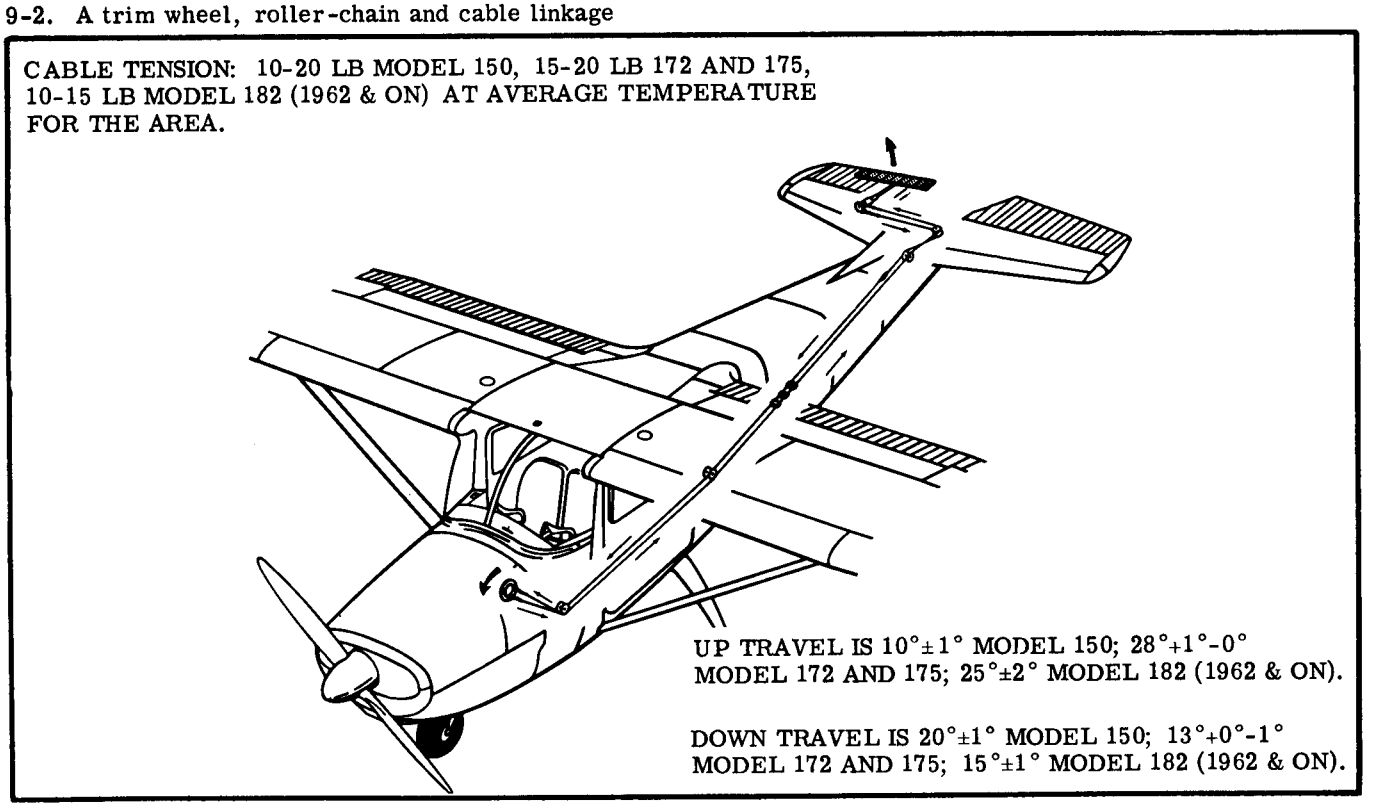

Figure 9-1. Elevator Trim Tab System Schematic

9-3. TROUBLE SHOOTING.

PROBABLE CAUSE	ISOLATION PROCEDURE	REMEDY
TRIM CONTROL WHEEL MOVES WITH EXCESSIVE RESISTANCE.		
Cable tension too high.	Check cable tension.	Adjust tension.
Pulleys binding or rubbing.	Visually check pulleys.	Install cables correctly.
Cables not in place on pulleys.	Visually check pulleys.	Install cables correctly.
Trim tab hinge binding.	Disconnect actuator and move tab up and down to check hinge resistance.	Lubricate or replace hinge as necessary.
Defective trim tab actuator.	Remove chain from actuator sprocket and operate actuator with fingers.	Replace actuator.
Rusty chain.	Visually check chain.	Remove and replace rusty chain.
Damaged sprocket.	Visually check sprockets.	Remove and replace damaged sprockets.
Bent sprocket shaft.	Observe motion of sprockets.	Remove and replace bent sprocket shafts.
LOST MOTION BETWEEN CONTROL WHEEL AND TRIM TAB.		
Cable tension too low.	Check cable tension.	Adjust cable tension.
Broken pulley.	Visually check pulleys.	Replace defective pulley.
Cables not in place on pulleys.	Visually check cables.	Install cables correctly.
Worn trim tab actuator.	Visually check actuator for excessive play.	Remove and replace worn actuator.
Actuator attachment loose.	Attempt to shake actuator.	Tighten.
TRIM INDICATOR FAILS TO INDICATE CORRECT TRIM POSITION.		
Indicator incorrectly engaged on wheel track.		Reset indicator.
INCORRECT TRIM TAB TRAVEL.		
Stop blocks loose or incorrectly adjusted.		Adjust stop blocks on cables.

9-4. REMOVAL. (See figure 9-2.)

a. Remove screws securing cover, then separate trim wheel cover halves to remove the trim tab control wheel.

b. Loosen cables at turnbuckles, then disconnect cable ends by removing bolt (14).

c. Remove the three stop blocks (17) from the cables.

d. Remove pulleys in the system if necessary. To remove cables it is necessary to remove either the pulleys or the cotter pin cable guards.

e. Remove actuator from the right stabilizer after disconnecting the push-pull channel, removing the actuator clamps and the chain guard and separating the chain from the actuator sprocket.

f. Remove the elevator trim tab by removing hinge pins or by drilling out rivets attaching the hinge to the tab assembly.

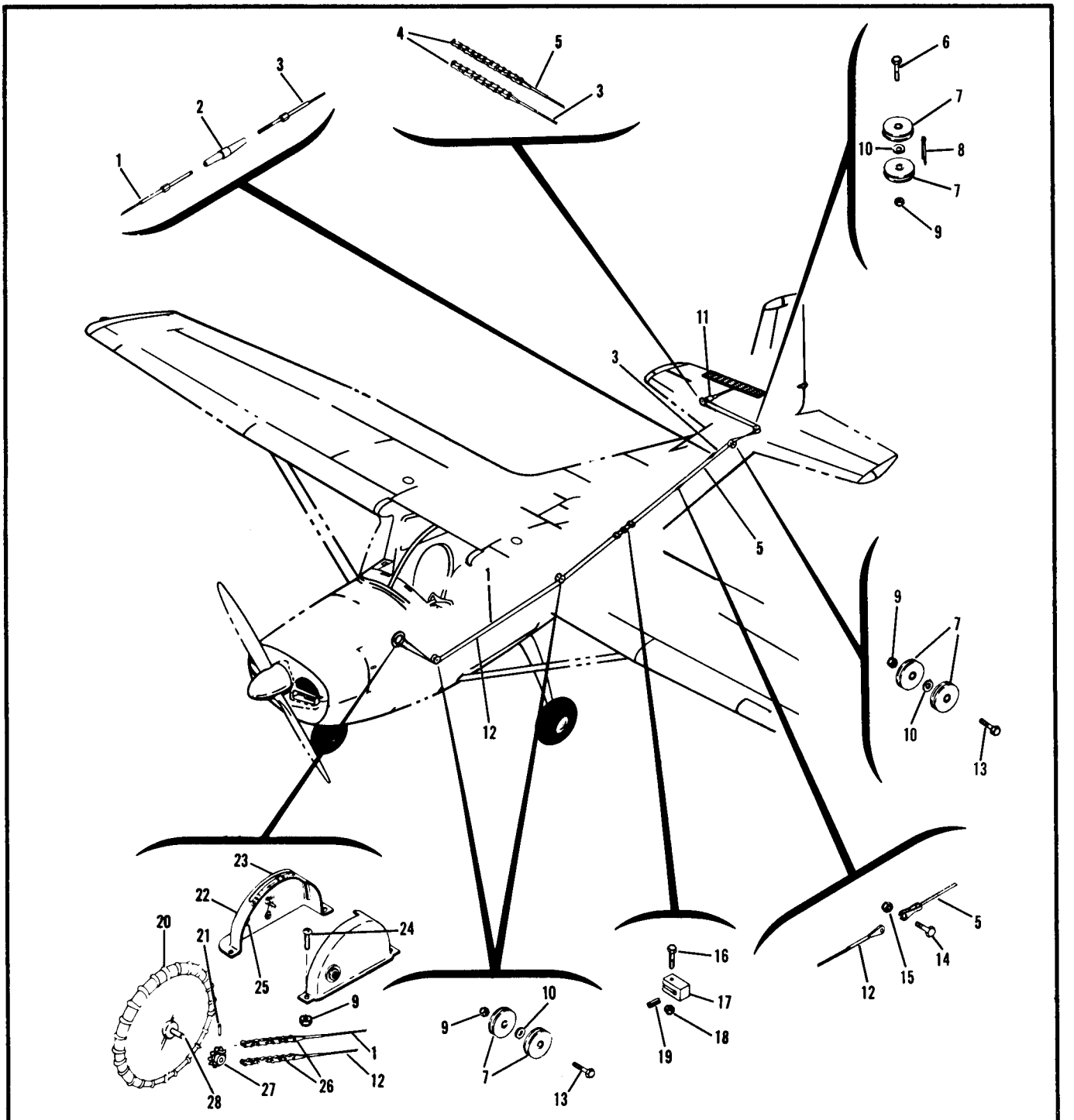

1. Cable
2. Turnbuckle Barrel
3. Cable
4. Roller Chain
5. Cable
6. Bolt
7. Pulley
8. Cotter Pin
9. Nut
10. Washer
11. Tab Actuator
12. Cable
13. Bolt
14. Bolt
15. Nut
16. Bolt
17. Travel Stop
18. Nut
19. Fairlead Bushing
20. Trim Wheel
21. Roll Pin
22. Cover Half
23. Position Pointer
24. Screw
25. Bearing
26. Roller Chain
27. Sprocket
28. Shaft

Figure 9-2. Elevator Trim Tab System (except 182, 1962 & on)

NOTE

The ends of the hinge are crimped to prevent escape of the hinge pin; it is necessary to spread the crimped ends with a drift punch before driving out the hinge pin.

9-5. INSTALLATION OF THE ELEVATOR TRIM CONTROL SYSTEM.

a. Install the elevator trim tab.

NOTE

Flatten the ends of the hinge after installing the hinge pin to prevent the hinge pin from working loose.

b. Route the cable and chain through the fuselage and right stabilizer and reinstall any pulleys or cable guards which were removed.

c. Install the actuator and push-pull channel.

NOTE

To ease rigging, turn the actuator to full-out position minus 1/2 turn before installing the push-pull channel.

d. Install the trim wheel, turning it to full forward position, with the indicator set to "Nose-Down" position.

e. Set roller chain on trim wheel and actuator sprockets, allowing 1/2 to 1 inch of overlap in the direction of travel.

f. Connect loose ends of cable with bolt (14) and nut (15).

g. Rig the system in accordance with paragraph 9-6.

9-6. RIGGING THE ELEVATOR TRIM CONTROL SYSTEM.

a. Turn tab control wheel to full forward position. Adjust actuator to full up position, then turn actuator back 1/2 turn.

b. Position roller chain on sprockets at each end, allowing 1/2 to 1 inch of overlap in the direction of travel.

c. Tighten cables to the correct tension.

NOTE

Trim tab cable tension is 10-20 lb. in the 150 Model, 15-20 lb. in the 172 and 175, 10-15 lb. in the 182.

d. Place tab in neutral position by rotating the tab control wheel. Set an inclinometer on the tab. Adjust inclinometer to 0°.

e. Turn tab control wheel to full forward position and check tab up travel.

NOTE

150 Model elevator tab up-travel should be 10° ±1°. 172 and 175 up-travel should be 28°+1-0°. 182 up-travel should be 25°±2°.

f. If necessary to attain this travel, disconnect push-pull channel at actuator and adjust actuator.

g. Turn tab control wheel to the full rearward position and check down-travel.

NOTE

150 Model elevator tab down-travel is 20°±1°. 172 and 175 down-travel is 13°+0-1°. 182 down-travel is 15°±1°.

h. Adjust the travel stops located on the trim tab cables between the first and second bulkheads aft of the baggage compartment to attain the prescribed travel limits.

NOTE

On the 182, there are four travel stops, instead of three as on the other models. The two stops on the right hand trim cable are located immediately fore and aft of the turnbuckle, and the two on the left hand cable are positioned as necessary to attain the specified travel.

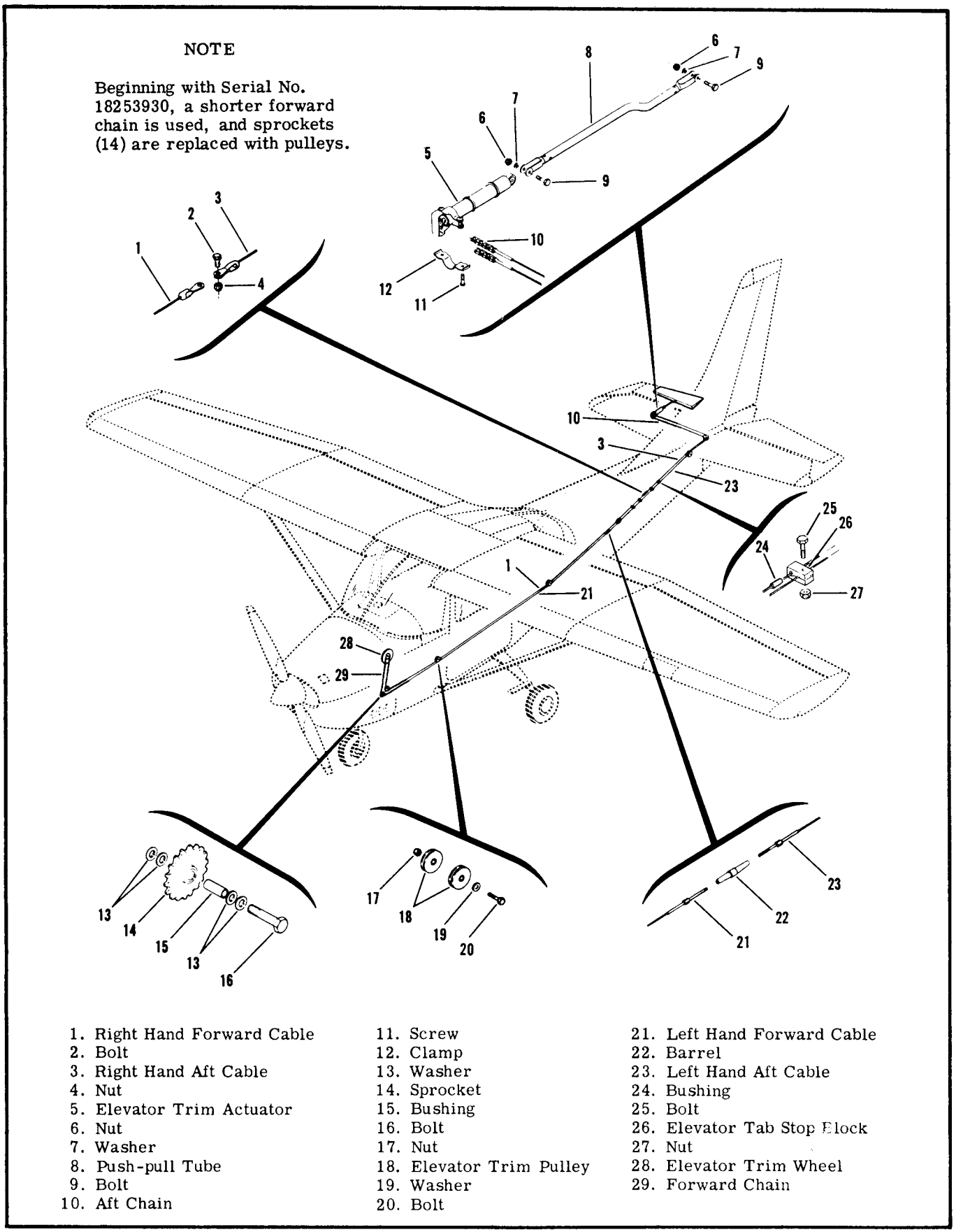

1. Right Hand Forward Cable
2. Bolt
3. Right Hand Aft Cable
4. Nut
5. Elevator Trim Actuator
6. Nut
7. Washer
8. Push-pull Tube
9. Bolt
10. Aft Chain
11. Screw
12. Clamp
13. Washer
14. Sprocket
15. Bushing
16. Bolt
17. Nut
18. Elevator Trim Pulley
19. Washer
20. Bolt
21. Left Hand Forward Cable
22. Barrel
23. Left Hand Aft Cable
24. Bushing
25. Bolt
26. Elevator Tab Stop Block
27. Nut
28. Elevator Trim Wheel
29. Forward Chain

Figure 9-3. Elevator Trim Tab Control System (182, 1962 and On)

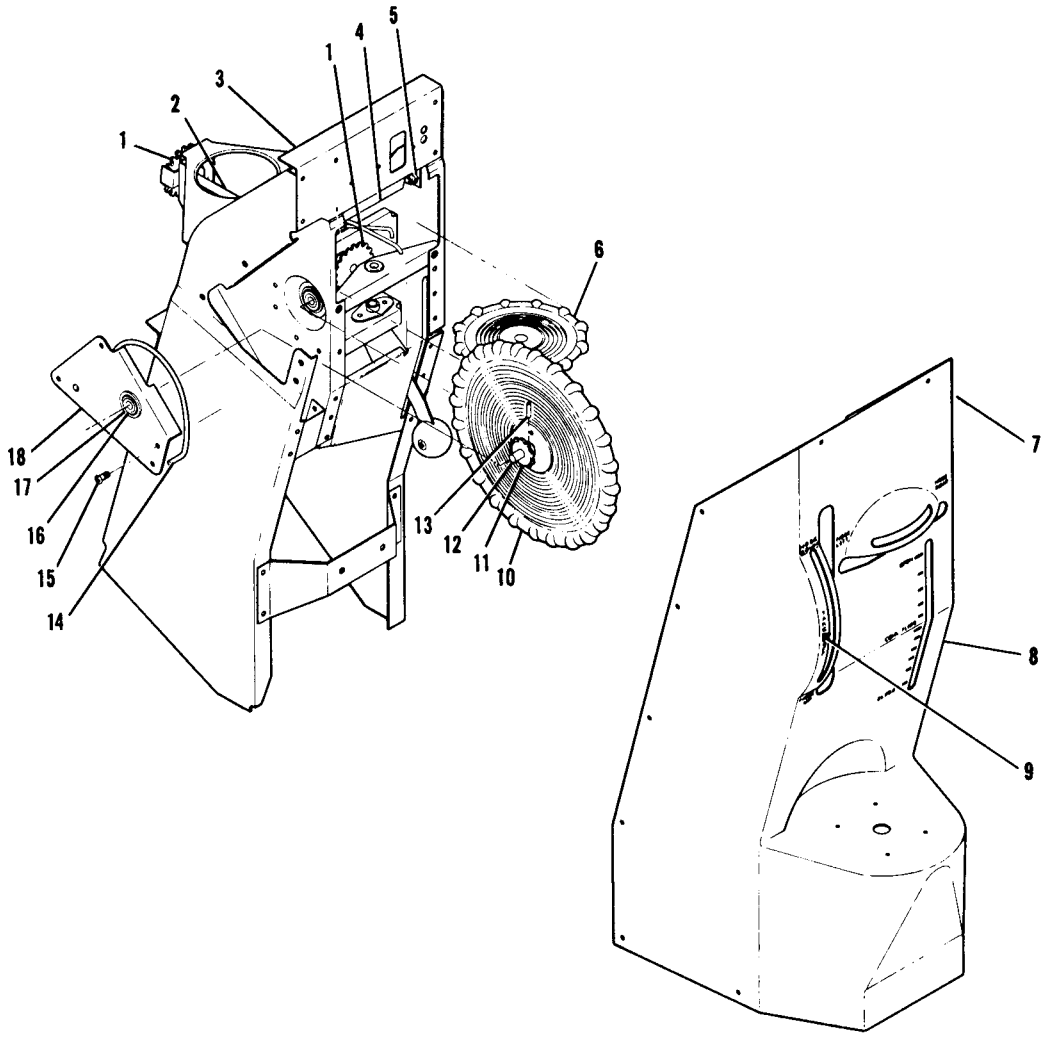

1. Rudder Trim Sprocket
2. Shaft
3. Console Structure
4. Rudder Trim Indicator Support
5. Nut
6. Rudder Trim Wheel
7. Screw
8. Console Cover
9. Take-off Pointer
10. Elevator Trim Wheel
11. Elevator Trim Sprocket
12. Shaft
13. Pin
14. Elevator Trim Indicator
15. Screw
16. Bearing
17. Bearing Housing
18. Elevator Trim Retainer

Figure 9-4. Console Installation (182, 1962 & On)

SECTION 10

RUDDER CONTROL SYSTEMS

TABLE OF CONTENTS Page

RUDDER CONTROL SYSTEMS 10-1
Trouble Shooting 10-2
Removal of Rudder Pedal Assembly 10-2
Installation of Rudder Pedal Assembly . . . 10-2
Removal of Rudder Cables 10-2
Installation of Rudder Cables 10-2
Removal of the Rudder 10-8
Installation of the Rudder 10-8
Rigging (150, 172, 175, 180, and 182 (Prior to Serial No. 34754) 10-8
Rigging (182 Serial No. 34754 thru 18253598) 10-8
Rigging (182 Serial No. 18253599 & on) 10-10
Rigging (185) 10-10

10-1. RUDDER CONTROL SYSTEMS.

10-2. Rudder control is maintained through the use of conventional rudder pedals which also control nose or tail wheel steering.

182 AND 185 SPECIAL NOTE: A rudder trim system is installed in later Model 182 series and 185 airplanes to provide a means of directional trim. The system also increases directional stability and is especially useful during "climb-out" operations when the engine is operating at nearly full power and the airplane forward speed is relatively low. The trim system compensates for engine torque by applying slight rudder control in the direction necessary for maintaining straight forward flight. Under cruising conditions, the rudder trim system may be adjusted to maintain directional trim at any power setting. The system is operated by the rudder trim control wheel. Clockwise rotation of the control wheel provides "NOSE RIGHT" trim, and counterclockwise rotation provides "NOSE LEFT" trim. A rudder trim position indicator indicates the trim setting when the trim control wheel is adjusted.

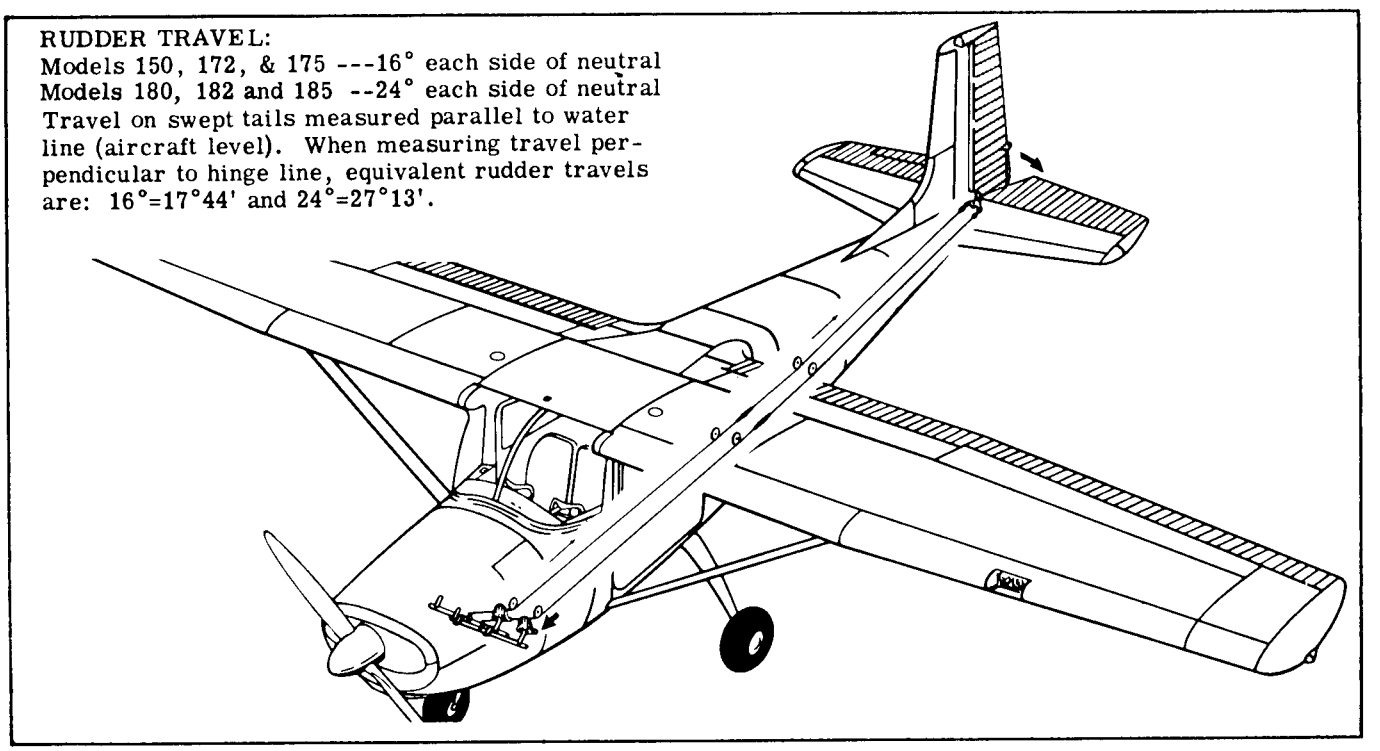

Figure 10-1. Rudder Control Schematic

10-3. TROUBLE SHOOTING.

PROBABLE CAUSE	ISOLATION PROCEDURE	REMEDY
RUDDER DOES NOT RESPOND TO PEDAL MOVEMENT.		
Broken or disconnected cables.	Visually check cables.	Connect or replace cables.
UNDUE EFFORT REQUIRED TO ACTUATE RUDDER.		
Cables too tight.	Check cable tension with tensiometer.	Adjust cable tension.
Cables not riding properly on pulleys.	Check visually.	Route cables correctly over pulleys.
Binding, broken, or defective pulleys.	Check visually, rotate pulleys by hand to feel for binding.	Replace defective pulleys.
Pedal bars need lubrication.		Lubricate with general purpose oil.
Defective rudder bar bearings.	Lubrication fails to eliminate binding.	Replace bearing blocks.
Defective rudder hinge bearings.		Replace defective bearings.

10-4. REMOVAL OF RUDDER PEDAL ASSEMBLY.

a. Remove the rudder bar shields and peel back the forward tunnel carpet to gain access to rudder bar assemblies.

b. Slack off rudder cable tension by loosening the rudder cable turnbuckles.

c. Disconnect rudder cables from rudder bars. Disconnect either rudder return springs or carry-thru cable from rudder bar. Some airplanes have the return springs and some have the carry-thru cable which "closes" the rudder system. If a bungee trim system is installed, disconnect from rudder bar.

d. Disconnect the pilot's pedals from brake master cylinders. Remove the copilot's rudder pedals if installed.

e. On tricycle gear airplanes, disconnect steering tubes or rods from rudder bars.

f. Remove the bolts through the bearing blocks and work the rudder bar assemblies out of the tunnel. If necessary, pilot's rudder pedals may also be removed.

10-5. INSTALLATION OF RUDDER PEDAL ASSEMBLY.

NOTE

Rudder bar assemblies should be checked for lubrication before installation. Internal bearings are oilite bearings which should be saturated with engine oil. The bearing blocks are magnesium alloy bearing against the steel shafts and require no lubrication unless binding is evidenced. A few drops of general purpose oil will eliminate such binding.

a. Position the rudder bar assemblies and install bearing blocks.

b. On tricycle gear airplanes, connect steering tubes or rods to rudder bars.

c. Install rudder pedals and connect pilot's pedals to brake master cylinders.

d. Connect rudder cables to rudder bars. If a bungee trim system is installed, connect the bungee and carry-thru cable to rudder bars. If rudder return springs are installed, connect to rudder bars.

e. Rig the rudder system in accordance with paragraph 10-10, 10-11 or 10-12.

f. Reinstall tunnel carpet and rudder bar shields.

10-6. REMOVAL OF RUDDER CABLES.

a. Disconnect rudder cables at rudder bar arms, turnbuckles, and rudder bellcranks.

b. Remove cable guards or pulleys as necessary. Connect guide wires to cables and pull cables out of aircraft.

NOTE

The guide wires are to be left in place to aid in reinstallation of the cables. Since routing of cables and accessibility is different in each series of airplanes, the direction of cable removal, choice of cable guard or pulley removal, and use of guide wires is optional.

10-7. INSTALLATION OF RUDDER CABLES.

a. Route the cables through the fuselage in their proper positions and detach guide wires if used.

b. Check that routing is correct and install all pulleys and cable guards removed.

c. Connect rudder cables to rudder bellcranks, turnbuckles, and rudder bar arms.

d. Rig the system as outlined in paragraph 10-10, 10-11 or 10-12.

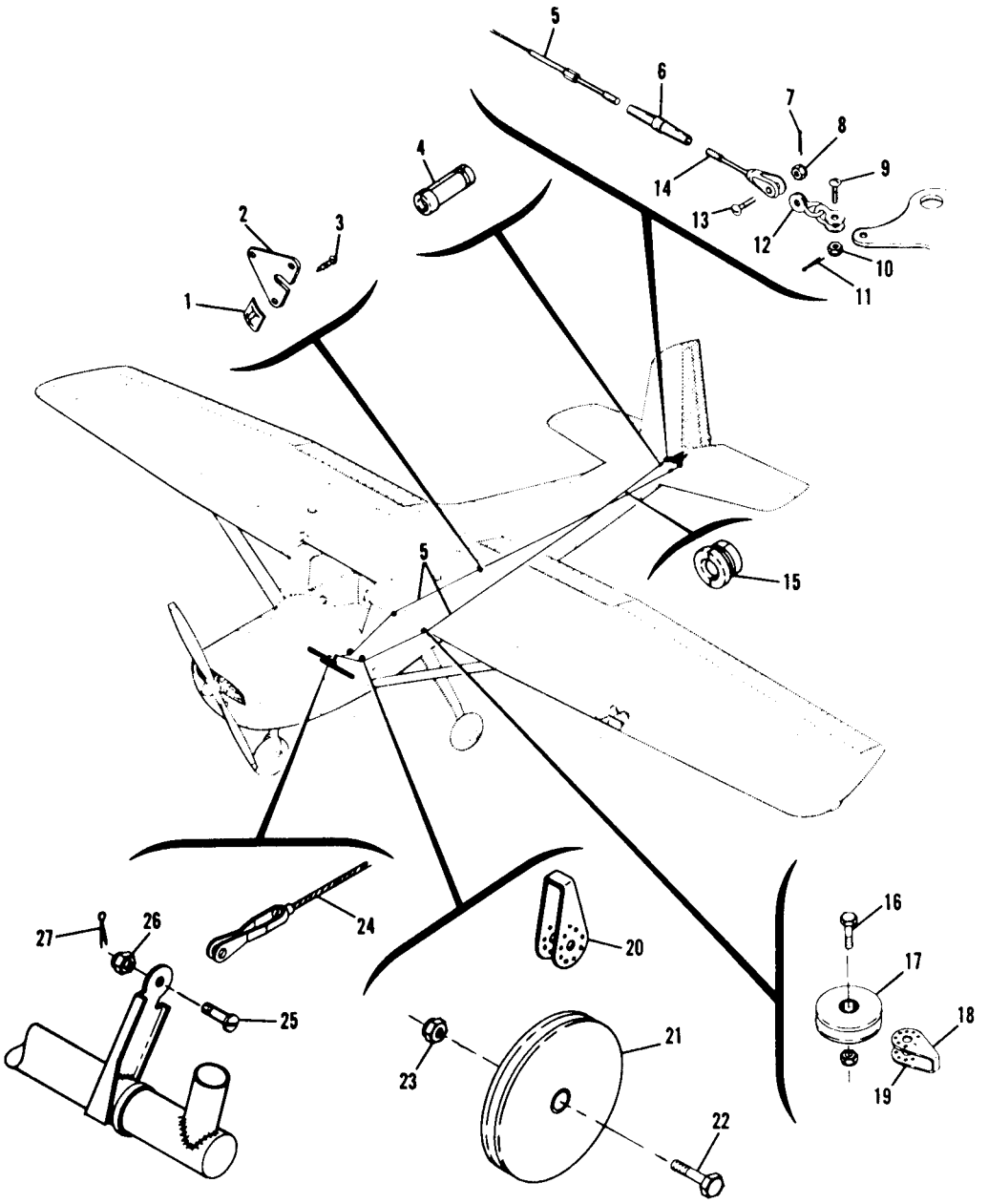

1. Nut
2. Fairlead
3. Screw
4. Fairlead
5. Cable
6. Turnbuckle Barrel
7. Cotter Pin
8. Nut
9. Clevis Bolt
10. Nut
11. Cotter Pin
12. Links
13. Clevis Bolt
14. Turnbuckle Fork
15. Fairlead
16. Bolt
17. Pulley
18. Guard
19. Nut
20. Guard
21. Pulley
22. Bolt
23. Nut
24. Cable
25. Clevis Bolt
26. Nut
27. Cotter Pin

Figure 10-2. Model 150 Rudder Control System

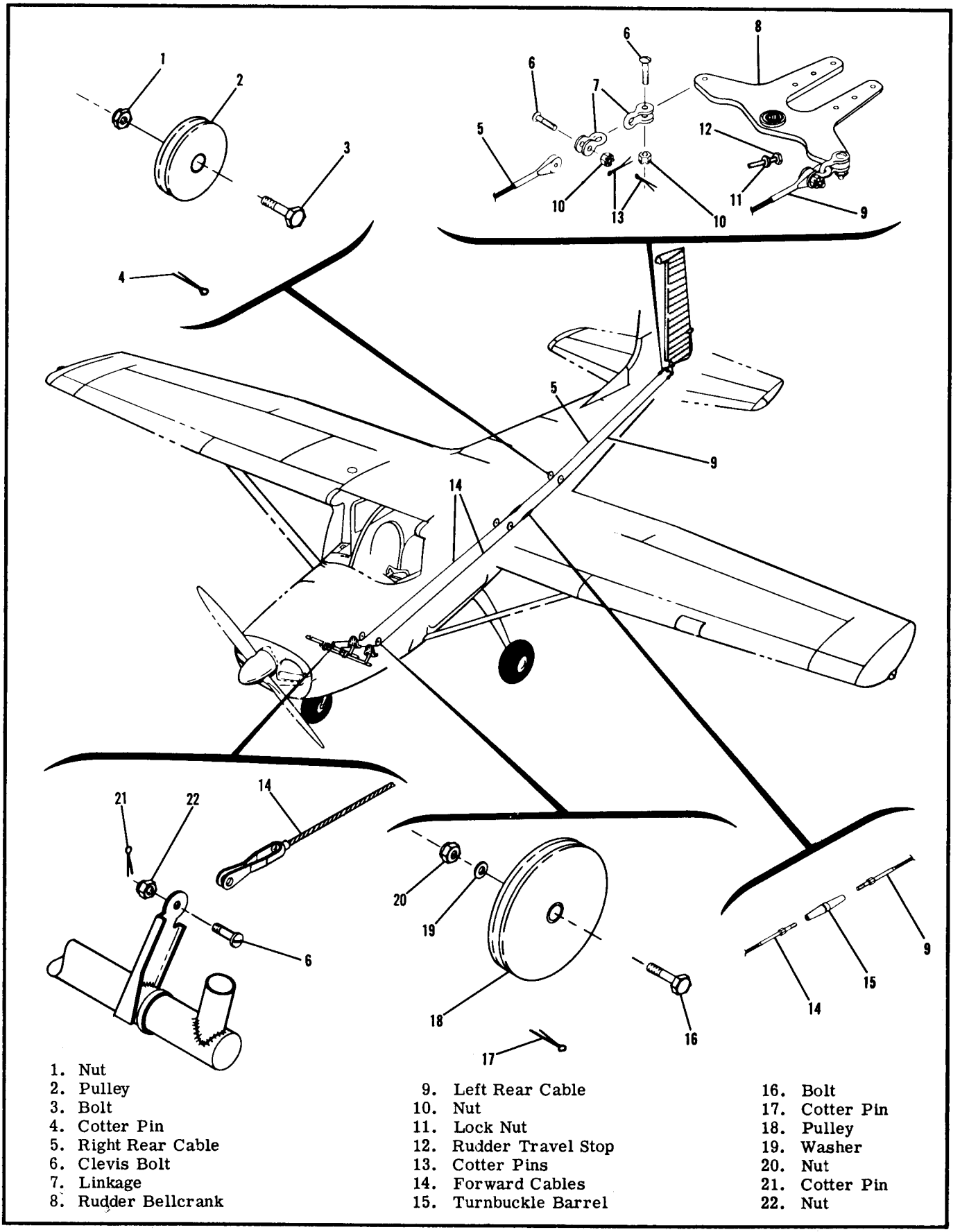

1. Nut
2. Pulley
3. Bolt
4. Cotter Pin
5. Right Rear Cable
6. Clevis Bolt
7. Linkage
8. Rudder Bellcrank
9. Left Rear Cable
10. Nut
11. Lock Nut
12. Rudder Travel Stop
13. Cotter Pins
14. Forward Cables
15. Turnbuckle Barrel
16. Bolt
17. Cotter Pin
18. Pulley
19. Washer
20. Nut
21. Cotter Pin
22. Nut

Figure 10-3. Model 172 and 175 Rudder Control System

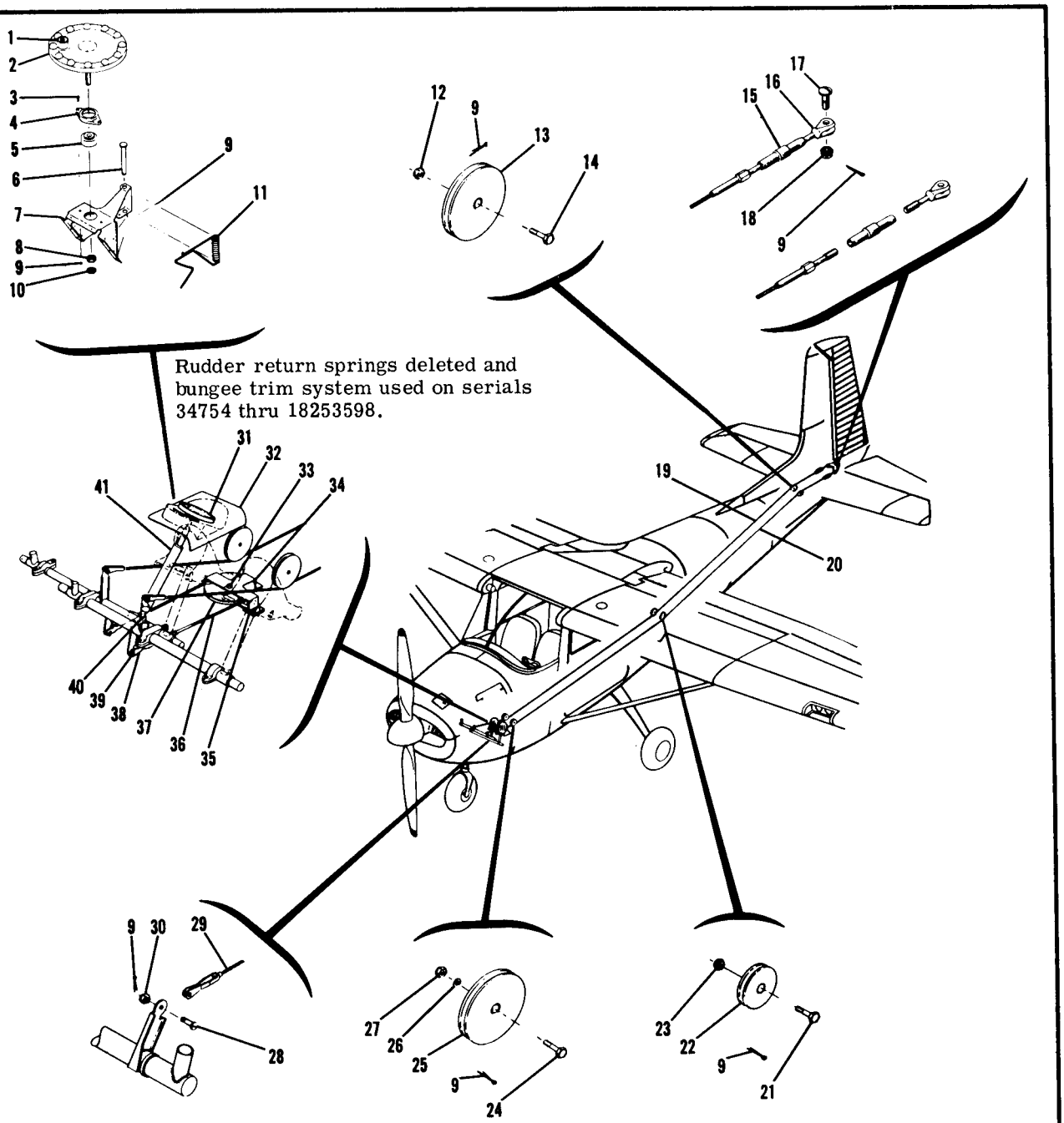

1. Knob
2. Trim Wheel
3. Screw
4. Bearing Retainer
5. Bearing
6. Pin
7. Bracket
8. Nut
9. Cotter Pin
10. Jamb Nut
11. Pointer
12. Nut
13. Pulley
14. Bolt
15. Turnbuckle Barrel
16. Turnbuckle Fork
17. Clevis Bolt
18. Nut
19. Right Cable
20. Left Cable
21. Bolt
22. Pulley
23. Nut
24. Bolt
25. Pulley
26. Washer
27. Nut
28. Clevis Bolt
29. Cable
30. Nut
31. Trim Wheel
32. Decorative Cover
33. Bolt
34. Pulley
35. Pulley Bracket
36. Carry-thru Cable
37. Pulley
38. Turnbuckle Fork
39. Clevis Bolt
40. Bolt, Nut
41. Bungee Assembly

Figure 10-4. Model 182 Rudder Control System (Prior to Serial 18253599)

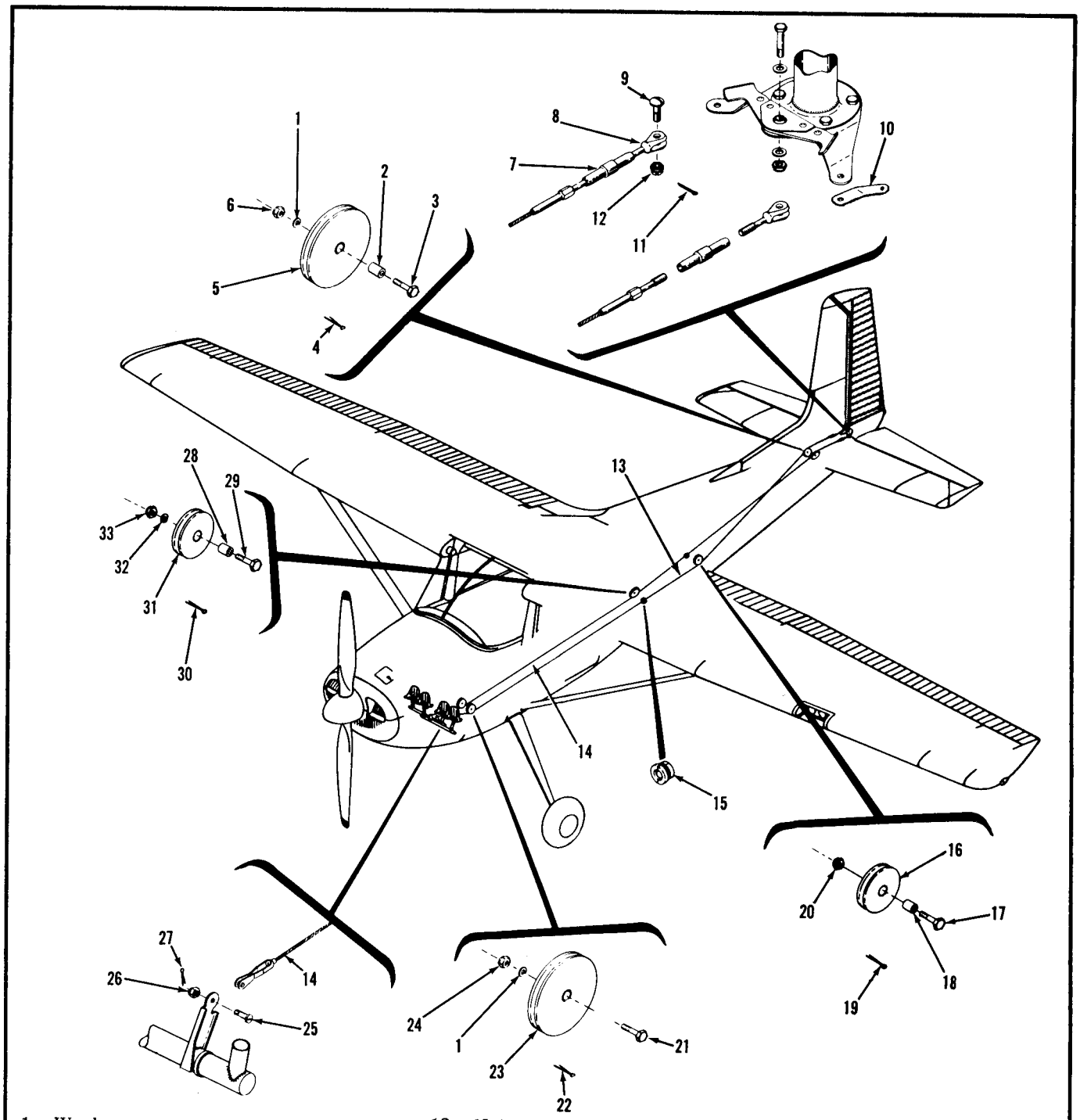

1. Washer
2. Bushing
3. Bolt
4. Cotter Pin
5. Pulley
6. Nut
7. Turnbuckle Barrel
8. Turnbuckle Fork
9. Clevis Bolt
10. Tailwheel Link
11. Cotter Pin
12. Nut
13. Rudder Left Cable
14. Rudder Right Cable
15. Fairlead
16. Pulley
17. Bolt
18. Bushing
19. Cotter Pin
20. Nut
21. Bolt
22. Cotter Pin
23. Pulley
24. Nut
25. Clevis Bolt
26. Nut
27. Cotter Pin
28. Bushing
29. Bolt
30. Cotter Pin
31. Pulley
32. Washer
33. Nut

Figure 10-5. Rudder Control System - Model 180 Prior to Serial 32151

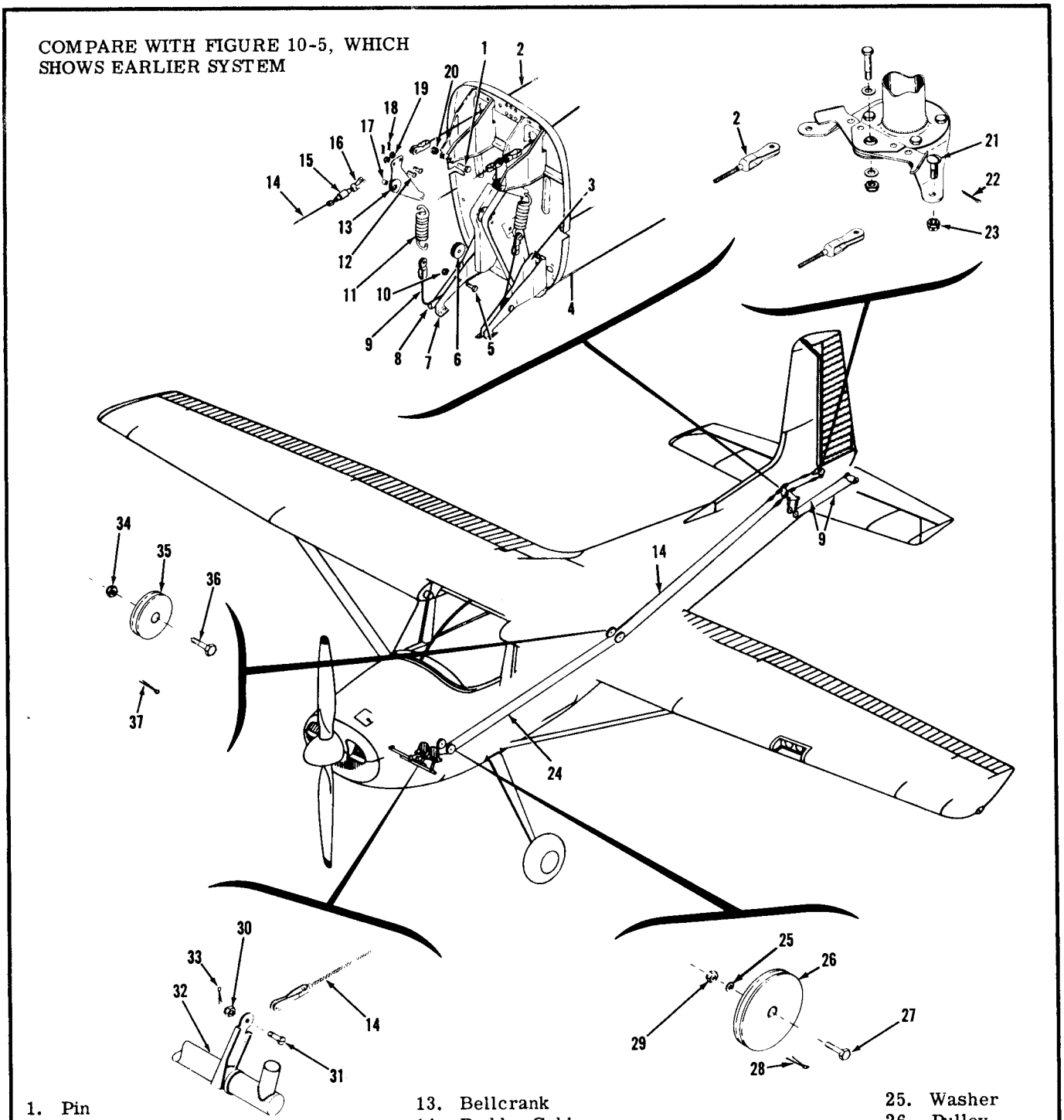

1. Pin
2. Aft Right Cable
3. Pulley Bracket
4. Tailwheel Cable
5. Bolt
6. Pulley
7. Pulley Bracket
8. Pulley Bracket
9. Steering Cable
10. Nut
11. Spring
12. Clevis Bolts
13. Bellcrank
14. Rudder Cable
15. Turnbuckle Barrel
16. Turnbuckle Fork
17. Bushing
18. Cotter Pins
19. Nuts
20. Nut
21. Clevis Bolt
22. Cotter Pin
23. Nut
24. Rudder Cable
25. Washer
26. Pulley
27. Bolt
28. Cotter Pin
29. Nut
30. Nut
31. Clevis Bolt
32. Rudder Bar
33. Cotter Pin
34. Nut
35. Pulley
36. Bolt

Figure 10-6. Rudder Control System - Model 180 Serial 32151 &on

10-8. REMOVAL OF THE RUDDER.

a. Disconnect tail navigation light.

b. Remove stinger on Model 180, 182 and 185 airplanes, remove rudder tips on Model 150 airplanes.

c. Loosen rudder cable turnbuckles, then disconnect cables from rudder bellcrank. Disconnect tailwheel steering cables on those airplanes where they are attached to the rudder bellcrank.

d. Support rudder, remove hinge bolts, and lift rudder free of aircraft.

10-9. INSTALLATION OF THE RUDDER may be accomplished by reversing the steps listed in the preceding paragraph, followed by rigging of the system.

10-10. RIGGING (Models 150, 172, 175, 180, and 182, prior to serial 34754).

NOTE

Refer to paragraph 10-11 for rudder system rigging of the Model 182, serial No. 34754 thru 18253598, paragraph 10-11A for Model 182, serial 18253599 and on, and paragraph 10-12 for Model 185. When rigging the Model 180, omit steps "b", "e," and "f."

a. Adjust the rudder travel stop bolts to attain correct rudder travel as listed in figure 10-1.

NOTE

Rudder stop bolts are located at the extreme rear fuselage bulkhead. Some stop bolts may be screwed in or out to adjust travel, others use washers under the bolt heads. These washers may be added or removed to adjust travel. Some stop bolts screw into self-locking nutplates, others have a jamb type locknut for security.

b. Disconnect nosewheel steering tubes from the nose strut.

c. Block the rudder in the neutral (streamlined) position.

d. Adjust rudder cable turnbuckles to align rudder pedals in neutral, 6 1/2" from the firewall to pedal pivot points (5 1/2" on the Model 150).

e. Tie down or weight the tail to raise the nosewheel off the ground.

f. Pull out sharply on the steering tube clevises to seat rod against internal spring, then adjust clevises until they align with rod end bearings and install.

g. Remove device used to block rudder and lower the nose of the airplane.

h. On Models 180 and 182, tighten the turnbuckle on the right rudder cable and loosen the turnbuckle on the left rudder cable an equal amount to offset the rudder 1° to the right.

i. Check that turnbuckles are properly safetied, cables are in pulley grooves, and cable guards are in place.

NOTE

A flight test may determine the need for rigging the rudder slightly off-center. Such correction should be made by tightening one rudder cable turnbuckle and loosening the opposite one an equal amount, thus keeping the nosewheel steering system and rudder pedals aligned while the rudder is shifted minutely. DO NOT attempt to rig the rudder by adjusting the nosewheel steering system.

10-11. RIGGING (Model 182, serial No. 34754 thru 18253598). (See figure 10-6.)

NOTE

Refer to paragraph 10-10, 10-11A, or 10-12 for rudder system rigging of other aircraft.

Key for Figure 10-7

1. Rudder Cable R. H.
2. Turnbuckle Barrel
3. Turnbuckle Fork
4. Bushing
5. Nut
6. Cotter Pin
7. Cotter Pin
8. Nut
9. Nut
10. Bolt
11. Aft Rudder Cable
12. Bracket - Inboard L. H.
13. Bracket - Outboard L. H.
14. Pulley
15. Bolt
16. Nut
17. Bracket - Inboard R. H.
18. Bracket - Outboard R. H.
19. Tailwheel Steering Cable
20. Tailwheel Steering Spring
21. Bolt
22. Bolt
23. Bellcrank
24. Bolt
25. Cotter Pin
26. Nut
27. Nut
28. Pulley
29. Bolt
30. Cotter Pin
31. Rod
32. Tube
33. Screw
34. Washer
35. Spring
36. Retainer
37. Clevis
38. Roll Pin
39. Pulley
40. Bracket
41. Cotter Pin
42. Bolt
43. Pulley
44. Washer
45. Nut
46. Bracket
47. Bolt and Nut
48. Cover
49. Rudder Cable L. H.
50. Bungee Assembly
51. Bolt, Washer & Nut
52. Bolt and Nut
53. Cable Barrel & Fork
54. Carry-thru Cable
55. Bolt
56. Nut
57. Cotter Pin
58. Arm
59. Nut
60. Lock Nut
61. Nut
62. Cotter Pin
63. Pin
64. Bracket
65. Bearing
66. Cap
67. Bolt
68. Knob
69. Wheel Assembly

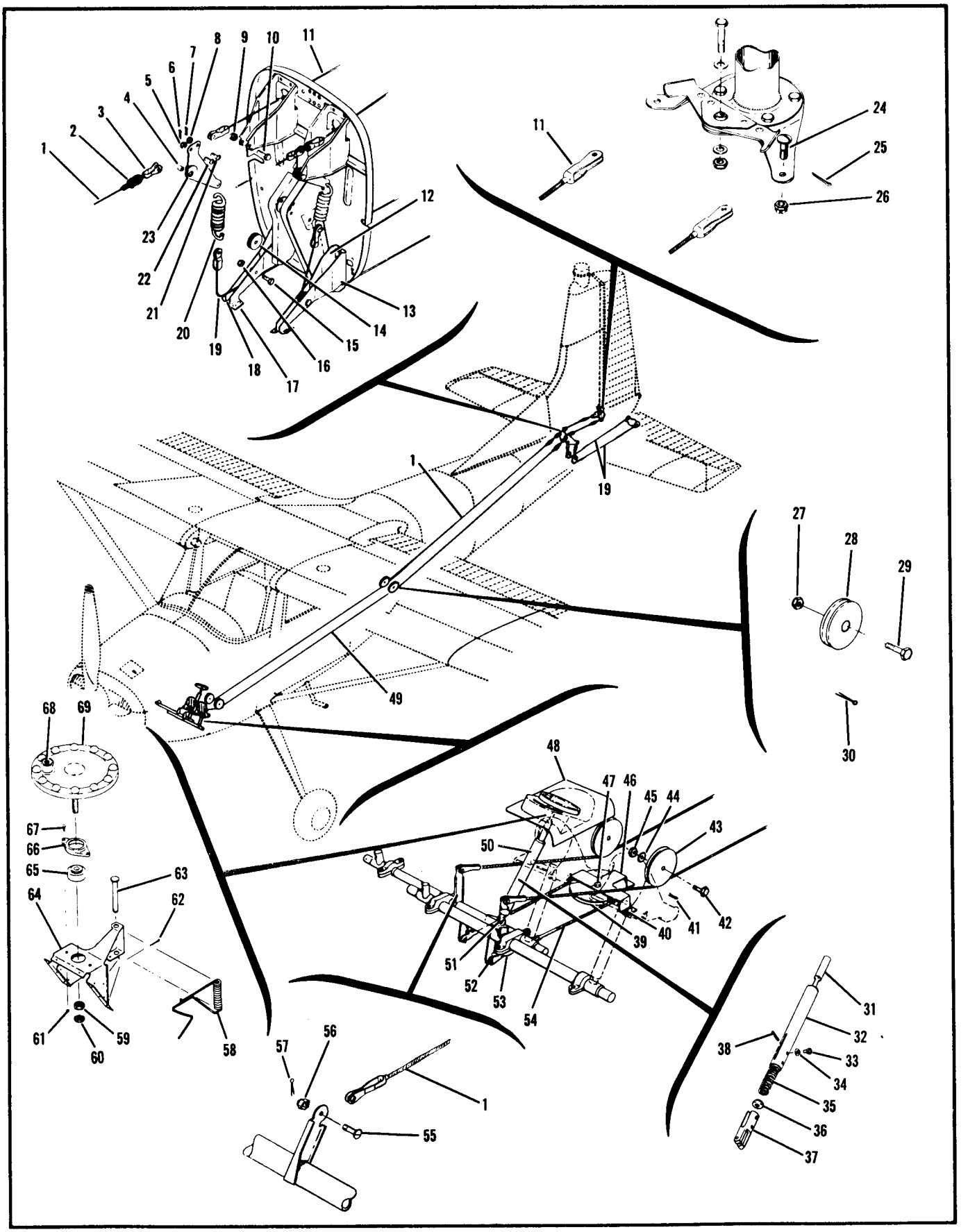

Figure 10-7. Rudder Control System - Model 185

a. Adjust the rudder travel stop bolts to attain correct rudder travel as listed in figure 10-1.
b. Disconnect nosewheel steering tubes from the nose strut. Disconnect rudder trim bungee from rudder bar arm.
c. Block the rudder in the neutral (streamlined) position.
d. Adjust turnbuckles on rudder cables and carry-thru cable (36, figure 10-4) so that rudder pedals are neutral and are 6 1/2" aft of the firewall, measured to the pedal pivot points. Maintain 20 to 40 pounds tension on the two rudder cables.
e. Manually place the nosewheel in neutral (straight fore-and-aft). Pull out sharply on the steering tube clevises to seat rod against internal spring, then adjust clevises until they align with rod end bearings and install.
f. Adjust trim control wheel until clevis on lower end of bungee assembly aligns with mounting hole in rudder bar arm and install with attaching bolt.
g. Check position of rudder trim position indicator. If indicator is not neutral, remove cover and upholstery, then remove clevis pin and reposition indicator to neutral. Reinstall clevis pin, upholstery and cover.
h. Remove device used to block rudder.
i. Tighten the turnbuckle on the right rudder cable and loosen the turnbuckle on the left rudder cable an equal amount to offset the rudder 1° to the right. Be sure to maintain 20 to 40 pounds cable tension.
j. Check that turnbuckles are properly safetied, cables are in pulley grooves, and cable guards are in place.

10-11A. RIGGING (Model 182, Serial 18253599 and on). (See figure 10-8.)

NOTE

Refer to paragraph 10-10, 10-11, or 10-12 for rudder system rigging of other aircraft.

a. Adjust the rudder travel stop bolts (10) to attain correct travel as listed in figure 10-1.
b. Remove chain (16) by unsnapping spring link and disconnect the bungee (7) from the bellcrank (4). Loosen the turnbuckles (21) on the rudder cables.
c. With the rudder pedals held in the neutral position, center the bellcrank (4) by adjusting the two push-pull rods (3). The bellcrank is centered when the center of the bolt hole in either end of the bellcrank is 1.57" from the bulkhead immediately in front of it. See that bellcrank and rudder pedals remain in neutral throughout the rigging procedure.
d. Tighten turnbuckles (21) on rudder cables until 20 to 40 lbs. tension is maintained on both cables with rudder set 1° to the right of neutral.
e. Tie down and weight the tail to raise the nosewheel clear of the ground.
f. Center nose wheel and extend strut until nosewheel center stop is engaged.
g. Screw bungee sprocket all the way into bungee shaft, then screw rod end all the way into sprocket threads. This sets the bungee at its shortest free length. Holding rod end to prevent it from turning, rotate sprocket until hole in rod end aligns exactly with attaching hole in bellcrank, and install.
h. Make sure trim indicator is in neutral. Attach chain to sprockets. Tighten chain by adding washers (maximum of four each side) under angle (26) at screws (9), until free play at mid-point of chain is .50".
i. Lower nose of airplane and check that all turnbuckles are safetied, cables are in pulley grooves, and cable and chain guards are in place.

WARNING

Check operation of rudder to see that response is in proper direction when operated by the rudder pedals.

10-12. RIGGING (MODEL 185).

NOTE

Refer to paragraph 10-10, 10-11, or 10-11A for rudder system rigging of other aircraft.

a. Adjust the rudder travel stop bolts to attain correct rudder travel as listed in figure 10-1.
b. Block the rudder in the neutral (streamlined position.
c. Adjust turnbuckles on rudder cables and carry-thru cable (40, figure 10-7) so that rudder pedals are neutral and are 6-1/2" aft of firewall, measured to pedal pivot points. Maintain 20 to 40 pounds tension on the two rudder cables.
d. Adjust trim control wheel until clevis on lower end of bungee assembly aligns with mounting hole in rudder bar arm and install with attaching bolt.
e. Check position of rudder trim position indicator. If indicator is not neutral, remove cover and upholstery, then remove clevis pin and reposition indicator to neutral. Reinstall clevis pin, upholstery and cover.
f. Remove device used to block rudder.
g. Tighten the turnbuckle on the right rudder cable and loosen the turnbuckle on the left rudder cable an equal amount to offset the rudder 1° to the right. Be sure to maintain 20 to 40 pounds cable tension.
h. Check that turnbuckles are properly safetied, cables are in pulley grooves, and cable guards are in place.

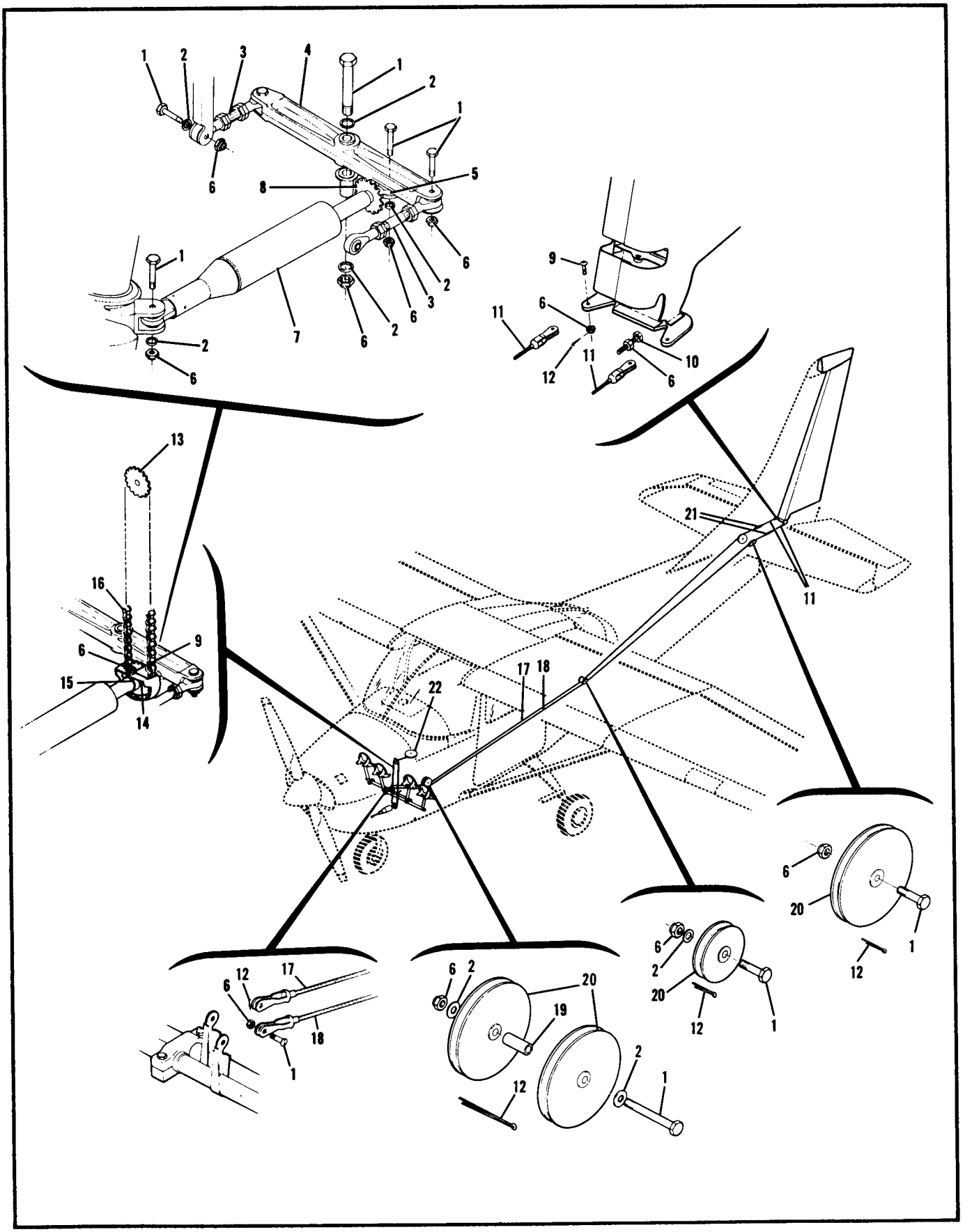

Figure 10-8 (Sheet 1 of 2). Model 182 Rudder Control System (Serial 18253599 and on)

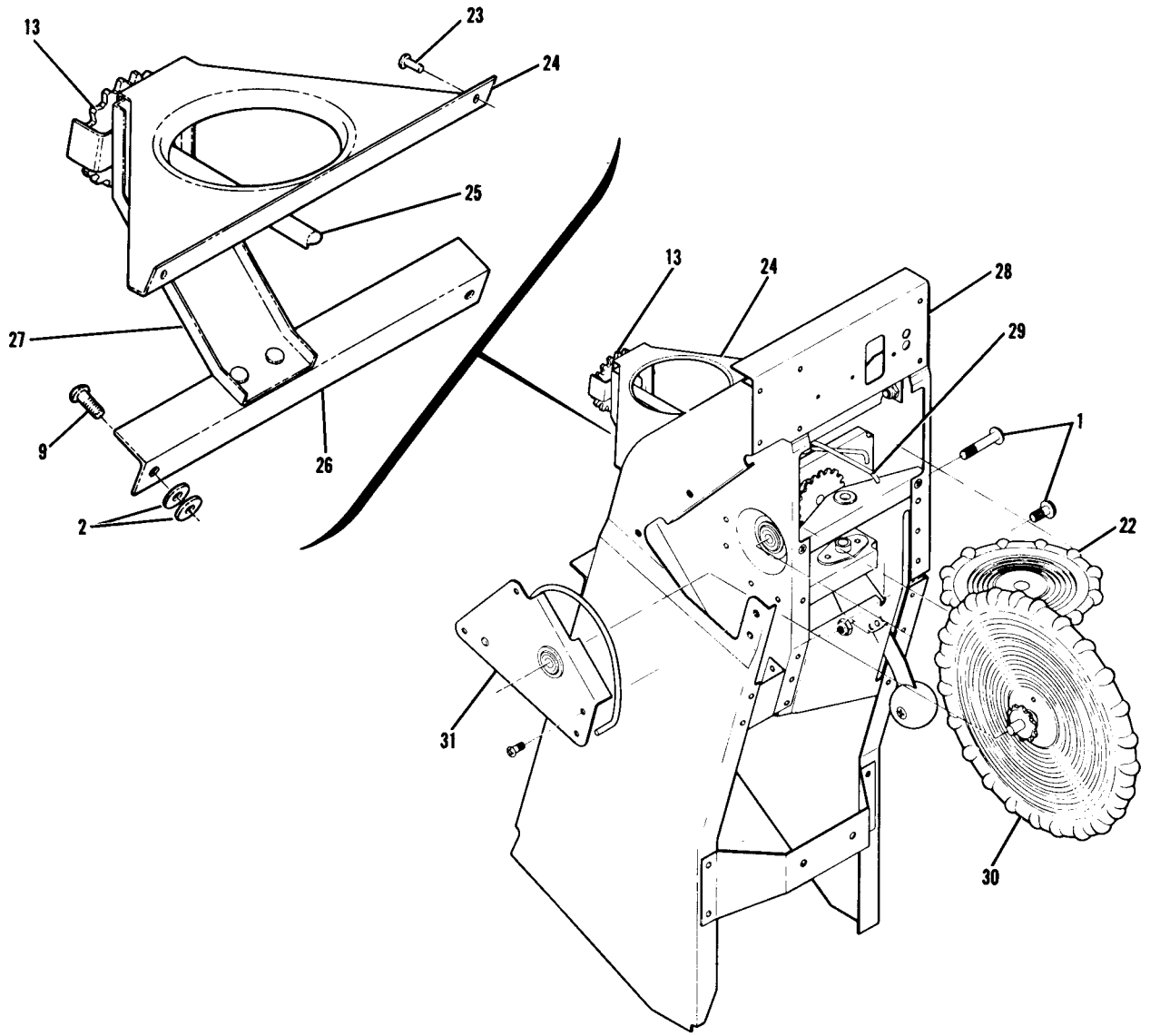

1. Bolt
2. Washer
3. Push-pull Rod
4. Bellcrank
5. Rod End
6. Nut
7. Bungee
8. Lower Chain Sprocket
9. Screw
10. Rudder Stop Bolt
11. Aft Rudder Cable
12. Cotter Pin
13. Upper Chain Sprocket
14. Chain Guard
15. Clamp
16. Rudder Trim Chain
17. Right Hand Forward Cable
18. Left Hand Forward Cable
19. Spacer
20. Pulley
21. Turnbuckles
22. Rudder Trim Wheel
23. Rivet
24. Sprocket Support Bracket
25. Shaft
26. Angle
27. Sprocket Support
28. Console Assembly
29. Rudder Trim Indicator
30. Elevator Trim Wheel
31. Elevator Trim Indicator

Figure 10-8 (Sheet 2 of 2). Model 182 Rudder Control System

SECTION 11

STABILIZER CONTROI SYSTEM

TABLE OF CONTENTS Page

STABILIZER TRIM CONTROL SYSTEM 11-1
Trouble Shooting 11-2
Replacement of the Stabilizer 11-5
Replacement of Stabilizer Actuators and Control Cable 11-5
Replacement of the Stabilizer Trim Wheel 11-5
Stabilizer Actuator Overhaul 11-5
Disassembly of Stabilizer Actuator. 11-5
Repair of Stabilizer Actuator 11-5
Rigging the Stabilizer Control System. . . . 11-7

11-1. STABILIZER TRIM CONTROL SYSTEM.

11-2. On the Model 180, 182 (prior to serial 182-53599) and 185 airplanes the entire stabilizer may be trimmed to meet different speed and load conditions. The stabilizer is adjusted by rotating the stabilizer trim wheel which is mounted in the tunnel to the left of the flap control lever. The stabilizer trim wheel is equipped with a pointer which indicates nose attitude of the aircraft. Forward movement of the trim wheel trims the nose down; backward movement of the wheel trims the nose up. Stabilizer trim is changed by two screw-jack actuators linked by a roller-chain and cable system to the trim wheel. The stabilizer is pivoted at the rear spar and the screw-jacks raise and lower the front of the stabilizer.

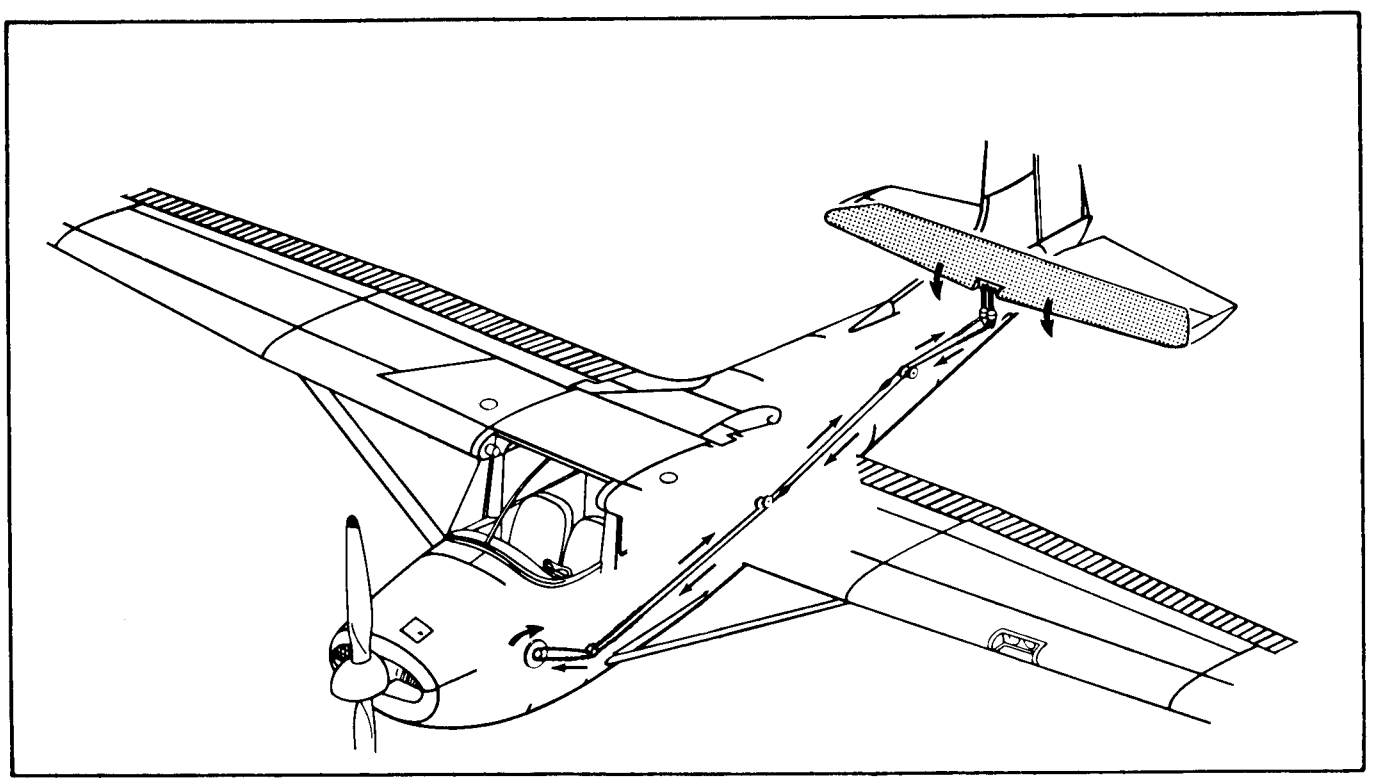

Figure 11-1. Stabilizer Trim Control System Schematic

11-3. TROUBLE SHOOTING.

PROBABLE CAUSE	ISOLATION PROCEDURE	REMEDY
FALSE READING ON STABILIZER POSITION INDICATOR.		
Pointer distorted or bent.	Check visually.	Straighten bent pointer.
Trim wheel mechanism improperly rigged.		Rig per paragraph 11-10.
Stabilizer actuators out of adjustment.		Rig per paragraph 11-10.
Sprocket retaining pin on trim wheel axle sheared.	Check for lost motion of trim wheel.	Replace sheared sprocket pin.
HARD OR SLUGGISH MOTION OF TRIM WHEEL MECHANISM.		
Bearings of trim wheel axle binding.	Check bearing condition.	Lubricate or overhaul.
Actuators binding.	Remove and check actuators individually.	Clean, lubricate, repair or replace actuators.
Incorrect cable tension.	Check with tensiometer.	Adjust tension.
Cables or chains not riding properly on pulleys and sprockets.	Check visually.	Route cables and chains correctly.
One screwjack actuator adjusted incorrectly.		Adjust actuators.
Warped/bent stabilizer.	Check visually.	Replace/repair stabilizer.
Rusty Chain.	Check visually.	Replace rusty chains.
Bent sprocket shaft.	Visually check motion.	Replace bent sprocket shafts.
STABILIZER FAILS TO REACH FULL TRAVEL LIMITS.		
Improper screwjack adjustment.		Adjust screwjacks per paragraph 11-10.
Incorrect trim wheel mechanism adjustment.		Adjust per paragraph 11-10.
Excessive slack in control cables.	Check cable tension.	Adjust cable tension to correct poundage.
STABILIZER DOES NOT RESPOND TO TRIM WHEEL MOVEMENT.		
Broken chain or cable.		Replace chain and cable.
Sheared sprocket retaining pin in trim wheel mechanism or actuator assembly.	With chain removed, attempt to turn sprocket by hand on shaft.	Replace sheared pin.

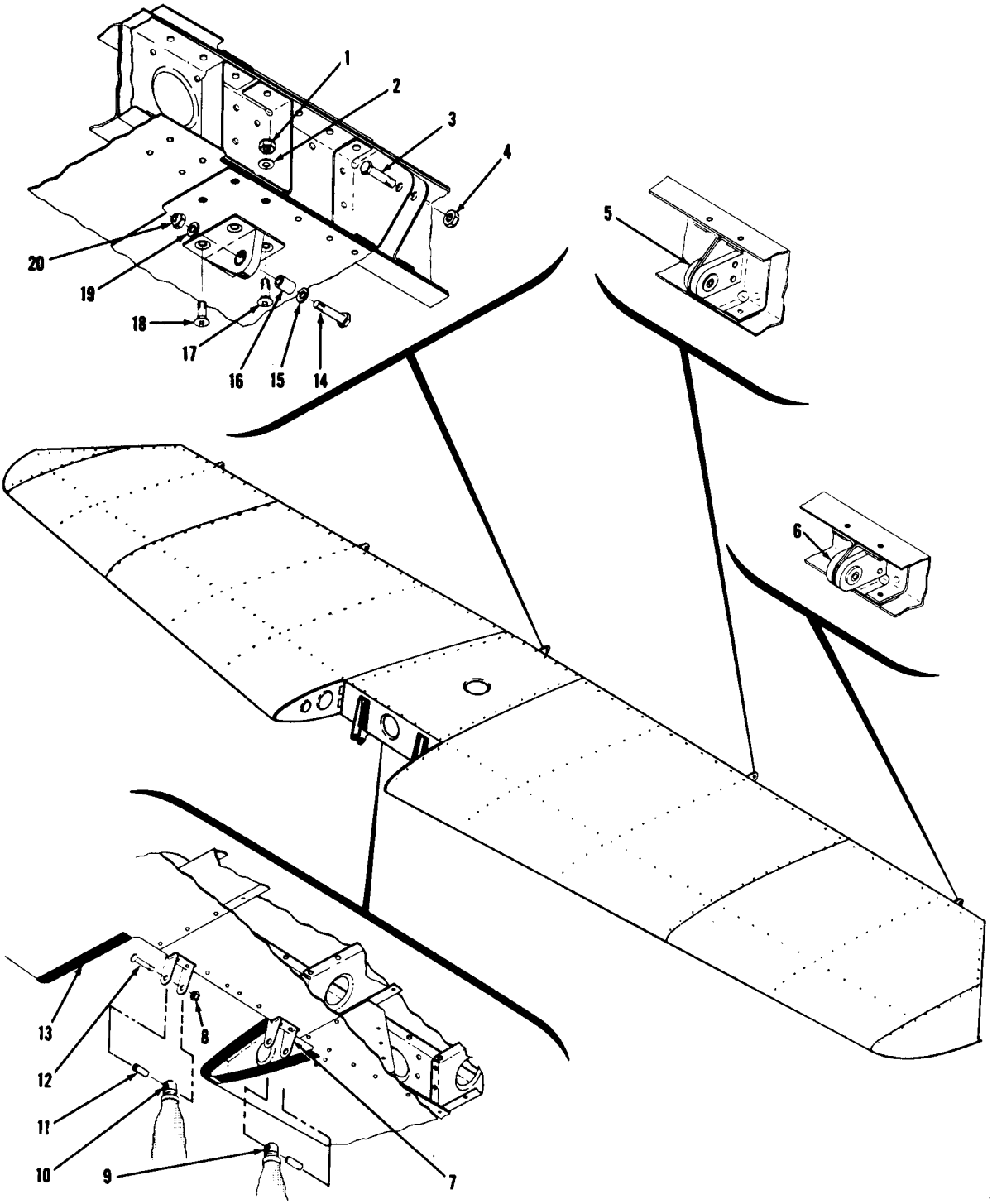

1. Nut
2. Washer
3. Bolt
4. Nut
5. Inboard Hinge
6. Outboard Hinge
7. Lower Attaching Bracket
8. Nut
9. Stabilizer Actuator RH
10. Stabilizer Actuator LH
11. Eccentric Bushing
12. Bolt
13. Rubber Moulding
14. Bolt
15. Washer
16. Bushing
17. Screw
18. Stabilizer Hinge Assembly
19. Washer
20. Nut

Figure 11-2. Stabilizer

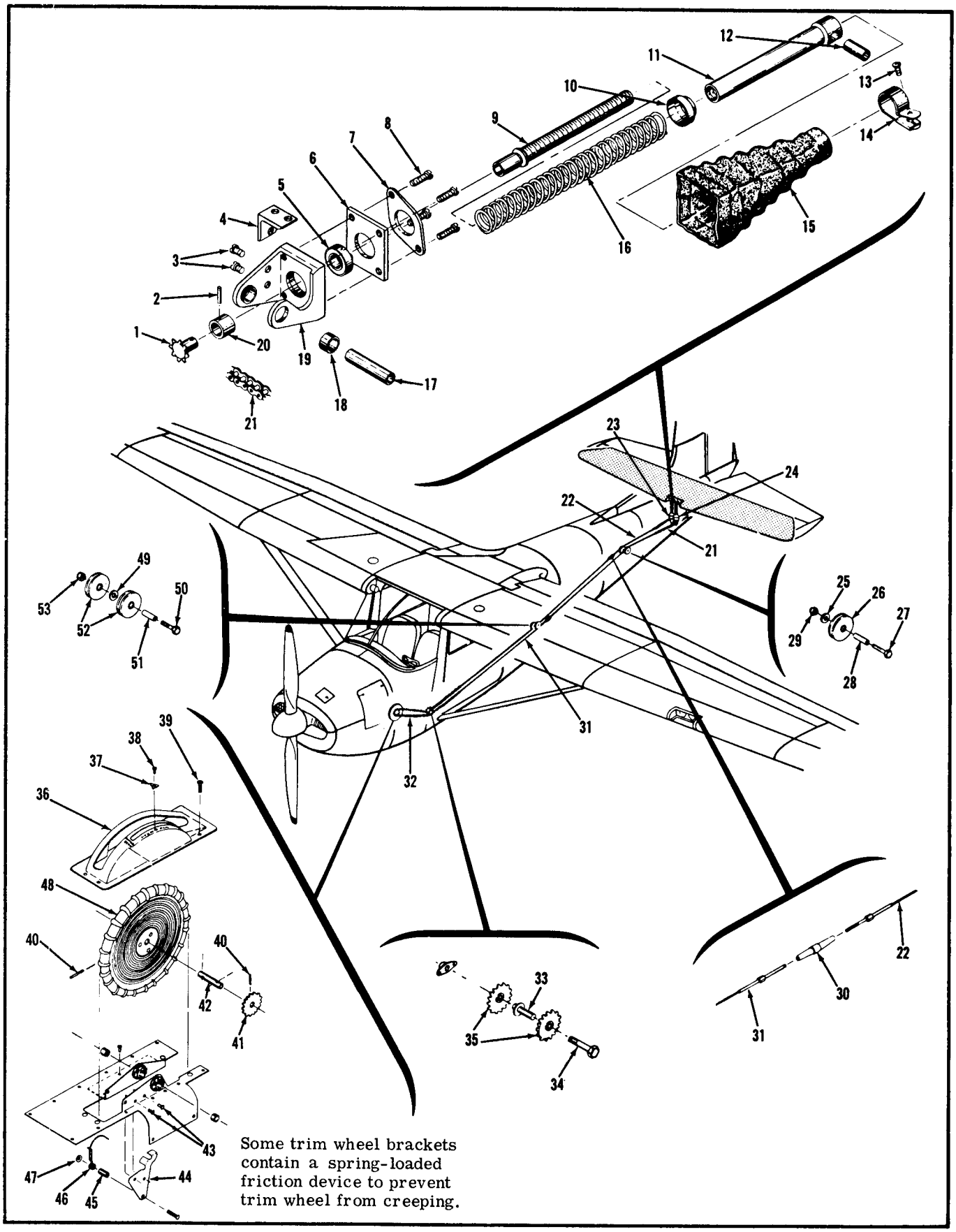

Figure 11-3. Stabilizer Control System

References for Figure 11-3.

1. Sprocket
2. Roll Pin
3. Screws
4. Chain Guard
5. Bearing
6. Bearing Cap
7. Retainer Plate
8. Screws
9. Actuator Screw
10. Collar
11. Barrel Nut
12. Eccentric Bushing
13. Screw
14. Clamp
15. Boot
16. Spring
17. Spacer
18. Bushing
19. Hinge Assembly
20. Retainer
21. Chain
22. Cable
23. Right Actuator
24. Left Actuator
25. Washer
26. Pulley
27. Bolt
28. Spacer
29. Nut
30. Barrel
31. Cable
32. Chain
33. Bushing
34. Bolt
35. Idler Sprockets
36. Trim Wheel Cover
37. Pointer
38. Screw
39. Screw
40. Roll Pin
41. Sprocket
42. Shaft
43. Screws
44. Chain Guard
45. Spacer
46. Pointer Indicator
47. Washer
48. Trim Wheel
49. Washer
50. Bolt
51. Bushing
52. Pulleys
53. Nut

11-4. REPLACEMENT OF THE STABILIZER.

a. Remove the stinger, rudder, fin and elevators. Remove all tail group fairings and access plates.

b. Remove nut, washer and bolt at each stabilizer hinge. Do not lose spacer.

c. Remove nut and bolt securing each screwjack to the stabilizer bracket.

d. Install the stabilizer by reversing the procedure listed above, then check rigging.

11-5. REPLACEMENT OF STABILIZER ACTUATOR AND CONTROL CABLE. (See figure 11-3.)

NOTE

The chain guards on the screwjack actuators make it necessary to remove the actuator chain and cable as an assembly.

a. Disconnect both cables at the turnbuckles aft of the baggage compartment.

b. Remove the stabilizer.

c. Work the cables free of pulleys (26).

d. Remove the nuts and bolts attaching each screwjack actuator to the fuselage structure and remove the actuators with the chain and cable attached.

e. Reinstall the actuators and cable assembly by reversing the steps outlined above and rigging as described in paragraph 11-10.

11-6. REPLACEMENT OF THE STABILIZER TRIM WHEEL.

NOTE

On some models, the trim wheel bearing support brackets are riveted to the tunnel structure. On other models, the right half contains a friction device and is removable.

a. Disconnect cables at turnbuckles aft of baggage compartment.

b. Remove the trim wheel cover assembly by removing attaching screws.

c. Using a 1/16 drift punch, remove roll pins securing trim wheel and sprocket to shaft.

d. Remove the shaft. Retain trim wheel and sprocket.

e. If necessary, remove screws (43) attaching chain guard.

f. Reinstall trim wheel by reversing the procedures outlined above, then rig.

11-7. STABILIZER ACTUATOR OVERHAUL.

11-8. DISASSEMBLY OF STABILIZER ACTUATOR. (See figure 11-4.)

a. Loosen and remove screw (14) and boot retaining clamp (15).

b. Carefully break the cemented bond between boot (16) and hinge assembly (20).

NOTE

Care should be taken to use an instrument which will not cut or tear the rubber boot.

c. Slide the boot (16), small end first, from the stabilizer actuator assembly.

d. Unscrew and remove the barrel nut assembly (12) from the actuator screw (10).

e. Slide the collar (11) and spring (17) from the actuator screw (10).

f. Cut the safety wire, and remove the four screws (9) securing plate (8) and cap (7) to the hinge assembly (20). Remove plate (8) and cap (7).

g. Remove screws (4) securing chain guard (5) and remove the chain guard.

h. Using a 1/16 inch drift pin, punch out roll pin (3). Pull sprocket (1) and retainer (2) from actuator screw (10).

i. Using a rubber mallet, lightly tap the actuator screw (10) out of bearing (6).

j. Spacer (18) and eccentric bushing (13) may be removed if desired by pushing them from their respective holes.

k. If necessary, bearing (6) may be removed by pressing bearing out of hinge assembly (20).

l. Bushings (19) are a press fit. Removal of these bushings is not recommended.

11-9. REPAIR OF STABILIZER ACTUATOR. (See figure 11-4.)

a. If bearing is being replaced, press bearing (6)

into hinge assembly (20) until bearing seats against the shoulder provided in the hole of hinge assembly (20).

b. Insert actuator screw (10) into bearing (6).

c. Install retainer (2) and sprocket (1) on the protruding end of actuator screw (10) so that the roll pin holes in each part are aligned. Use a 1/16 inch drift pin to correct any misalignment. Install roll pin (3).

d. Position cap (7) and plate (8) on hinge assembly (20), and install screws (9). Safety wire screws (9) two at a time.

NOTE

Plate (8) must be positioned so that its hole flange faces away from hinge assembly (20). This flange acts as a guide for spring (17).

e. Install collar (11) and spring (17) on barrel nut (12) so that spring (17) fits inside of collar (11).

f. Position the free end of spring (17) over actuator screw (10), and compress spring until barrel nut (12) can be started on threads of actuator screw (10). Screw barrel nut (12) all the way down on screw assembly (10).

NOTE

The barrel nut (12) and actuator screw (10) are lapped together for precision fit. When replacing either or both of these units, screw and nut must be lapped with Specification SS-C-614 grinding compound, grit No. 400, Type II.

g. Install screws (4) to attach chain guard (5). Do not safety wire screws (4) as the chain guard will have to be removed when the chain is installed.

h. Slide boot (16) over the stabilizer actuator assembly until the small end of boot (16) fits directly over collar (11). Secure boot to collar with clamp (15) and screw (14).

i. Pull the large end of boot (16) away from the squared area of hinge assembly (20), and fold the last 1 inch of the boot back so that inner surface shows.

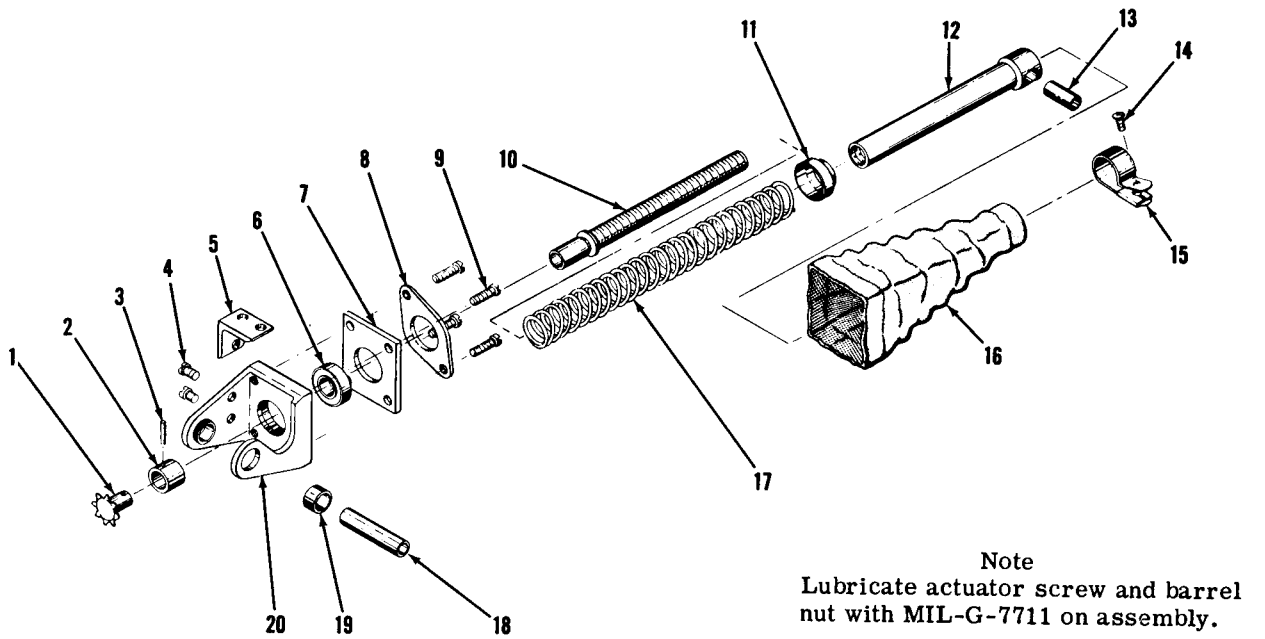

Note
Lubricate actuator screw and barrel nut with MIL-G-7711 on assembly.

1. Sprocket
2. Retainer
3. Roll Pin
4. Screw
5. Chain Guard
6. Bearing
7. Retainer Cap
8. Retainer Plate
9. Screw
10. Actuator Screw
11. Collar
12. Barrel Nut
13. Eccentric Bushing
14. Screw
15. Clamp
16. Boot
17. Spring
18. Spacer
19. Bushing
20. Hinge Assembly

Figure 11-4. Stabilizer Screw-jack Actuator

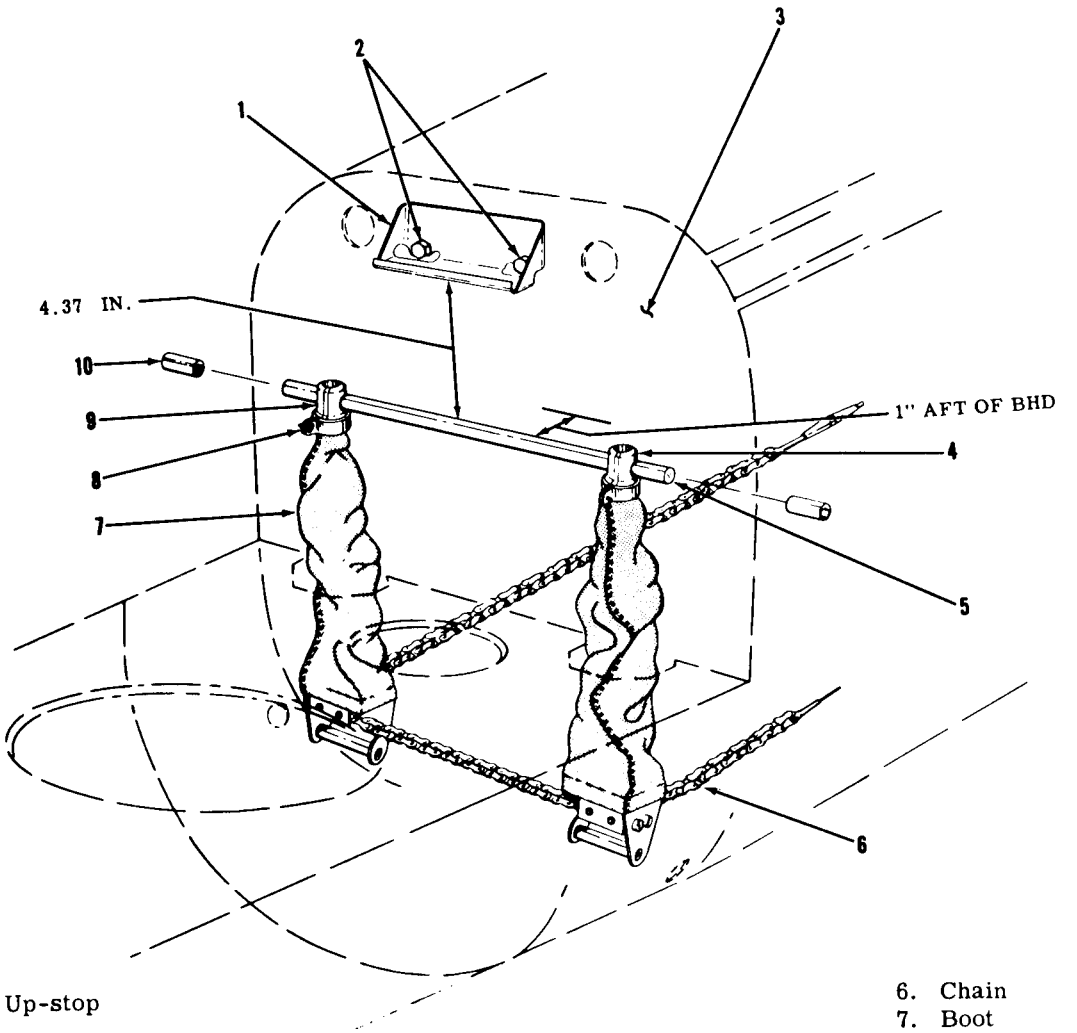

1. Stabilizer Up-stop
2. Bolts
3. Bulkhead
4. Right Actuator
5. 3/8 Drill Rod
6. Chain
7. Boot
8. Clamp
9. Left Actuator
10. Eccentric Bushing

Figure 11-5. Rigging the Stabilizer Actuators

j. Wipe the exposed inner surface of boot (16) and the squared area of hinge assembly (20) with dry-cleaning solvent, Federal Specification P-S-661 to remove all dirt and grease prior to cementing.

NOTE

Surfaces to be cemented must be absolutely free from all dirt and grease to insure a good bond.

k. Use general purpose cement, MIL-C-4003, and coat the inner exposed surface of boot (16) and the squared area of hinge assembly (20) with a thin coat of cement. Allow cement to become tacky to the touch. Fold the boot back into position over the hinge assembly and press the surfaces together.

l. Remove any excess cement drippings from parts using acetone as a solvent.

m. Install eccentric bushing (13) in the hole of barrel nut (12) and wire in place to prevent loss.

n. Install spacer (18) in bushings (19) of hinge assembly (20) and wire in place to prevent loss.

11-10. RIGGING THE STABILIZER CONTROL SYSTEM. (See figure 11-5.)

NOTE

Prior to rigging the adjustable stabilizer control system, the stabilizer must be removed to allow adjustment of the stabilizer actuators, and the stabilizer chains and cables should be correctly routed through the actuators and pulleys.

a. Release tension on stabilizer cables by loosening

turnbuckles.

b. Remove trim wheel cover.

c. Rotate stabilizer trim wheel to full forward position. Check that indicator pointer is at NOSE DOWN position. Readjust chain on sprockets until there are two chain links aft of the right hand sprocket (35, figure 11-3).

d. Tape or block the chain just aft of the sprocket to maintain the position stipulated in the preceding step.

e. Use two bolts (2) to position stop bracket (1) on bulkhead.

f. Manually rotate the barrel nuts of the actuators (7) to attain the 4.37 inch measurement specified in figure 11-5. Insert a 3/8 drill rod through the tops of the actuators to check this measurement and to make sure that the jacks are adjusted to the same height.

NOTE

After the preceding step the tops of actuators should not be rotated for attachment to the stabilizer.

g. Remove stop bracket (1). Position stabilizer and secure it at rear hinge points.

h. Remove the rod and insert eccentric bushings (10) in the holes in the tops of actuators (7). Secure stabilizers to actuators with bolts but do not install nuts.

NOTE

Do not deflect or warp stabilizer to engage bolts. Rotate eccentric bushings (10) and adjust actuator barrels up or down only enough to permit insertion of stabilizer attaching bolts with as little interference as possible.

i. Reinstall stop bracket (1). Remove tape or block installed in step "d."

j. Adjust stabilizer trim cable to a tension of 20 ± 2 1/2 pounds using the turnbuckles.

k. Test operate stabilizer through its full range of travel.

l. If stabilizer control system performs satisfactorily, install nuts on upper actuator bolts. Check that turnbuckles are safetied and chain guards are in place, then reinstall all items removed to accomplish the rigging procedure.

SHOP NOTES:

SECTION 12

POWERPLANT

(SEE SECTION 12A FOR MODEL 185 POWERPLANT)

TABLE OF CONTENTS

	Page
DESCRIPTION	12-1
ENGINE DATA	12-2
TROUBLE SHOOTING	12-3
ENGINE REMOVAL	12-6
Cleaning	12-6
Removal of Accessories	12-6
Disassembly and Overhaul	12-6
Power Plant Build-Up	12-6
ENGINE INSTALLATION	12-7
EXTREME WEATHER MAINTENANCE	12-7
Cold Weather	12-7
Low Battery Starting	12-7
Hand-Cranking	12-7
Using 12-Volt Automobile as External Power	12-8
Emergency Battery Charging	12-8
Hot Weather	12-8
Dusty Conditions	12-8
Seacoast Areas, Humid Areas	12-8
STARTING SYSTEMS	12-9
Manually Engaged Starting Systems	12-9
Removal of Starter and Drive	12-9
Installation of Starter and Drive	12-9
Automatically Engaged Starting Systems	12-9
Replacement of Starter	12-9
Replacement of Starter Adapter	12-9
Standard Maintenance	12-9
Overrunning Clutch Check	12-10
Trouble-Shooting the Starter	12-10
ENGINE CONTROLS	12-12
Engine Control Adjustments	12-12
Idle Speed and Mixture Adjustment	12-12
Throttle Adjustments	12-12
IGNITION	12-15
Bendix-Scintilla and Slick (Formerly Case) Magnetos	12-15
SLICK MAGNETOS	12-15
Removal	12-15
Internal Timing	12-15
Installation and Timing to the Engine	12-16
Maintenance	12-16
BENDIX-SCINTILLA MAGNETOS	12-19
Removal	12-19
Internal Timing of S-20 Series Magnetos	12-19
Internal Timing of S-200 Series Magnetos	12-22
Installation and Timing to the Engine	12-23
Maintenance	12-23
ENGINE COWLING	12-32
Removal and Replacement	12-32
Cleaning	12-32
Repair	12-32
BAFFLES	12-32
Removal and Replacement	12-32
Repair	12-32
ENGINE MOUNT (TUBULAR)	12-32
Repair	12-32
OIL SYSTEM	12-34
Trouble Shooting	12-34
EXHAUST SYSTEM	12-36
Removal and Replacement	12-36
Inspection	12-36

12-1. DESCRIPTION.

12-2. Air cooled, wet-sump, four and six cylinder opposed Continental engines are used on all single-engine Cessna aircraft. In general configuration the engines are similar, except for the engine used on the Model 175. In this engine, the propeller drive shaft is geared at a .750:1 ratio to the engine crankshaft, permitting the engine to operate at a higher rpm to develop an increased horsepower for its displacement. The Model 185 fuel injection engine is discussed in Section 12A.

NOTE

For repair and overhaul of the engines, accessories, and propellers, refer to appropriate publications issued by the manufacturers of these items.

12-3. ENGINE DATA.

AIRCRAFT SERIES	150	172	175	180	182
Continental Model	O-200-A	O-300-A O-300-C O-300-D	GO-300-A GO-300-C GO-300-D GO-300-E	O-470-A O-470-J O-470-K O-470-L O-470-R	O-470-L O-470-R
BHP (Rated Maximum)	100	145	175	225-A, J 230-K, L, R	230
@ RPM	2750	2700	3200 (Crank-shaft Speed)	2600-A, K, L, R 2550-J	2600
Number of Cylinders	4	6			
Displacement (Cubic Inches) Bore Stroke	200.91 4.0625 3.875	301.37 4.0625 3.875		471 5.00 4.00	
Compression Ratio	7.0:1		7.3:1	7.0:1	
Magnetos	Bendix S4LN-21	Bendix S6LN-21 or Slick (formerly Case) # 664	Slick (formerly Case) # 667	Bendix S6RN-25, prior to 1961; S6RN-201 left and S6RN-205 RT, 1961 & on	
Advance (BTC)	24° (+1 -0°)	26° Rt, 28° Left	28°	A-26°, J-20°, K-22°, L-22° and R-22°	
Right Magneto Fires Left Magneto Fires	Upper Plugs Lower Plugs			Lower Left, Upper Right Upper Left, Lower Right	
Firing Order	1, 3, 2, 4	1, 6, 3, 2, 5, 4	1, 4, 5, 2, 3, 6	1, 6, 3, 2, 5, 4	
Carburetor (Marvel-Schebler)	MA-3-SPA		MA-4-5		
Oil Sump Capacity	6 U.S. qts	8 U.S. qts	10 U.S. qts	12 U.S. qts	
Tachometer Drive	Type AS-54 Mechanical Drive				
Valve Mechanism	Hydraulic Lifters, Non-Adjustable Tappets				
Generator	12-volt (Ampere rating depends on model, serial number, and whether standard or optional equipment)				
Oil Pressure (psi) Normal Minimum Idling	 30-60 10				

ENGINE DATA (Cont)

AIRCRAFT SERIES	150	172	175	180	182
Oil Temperature Normal Operating Range Maximum	Within Green Arc Red Line				
Cylinder Head Temperature Maximum	525°F			500°F	500°F 460°F (1962 and on)
*Dry Weight with Accessories	220 lb	298 lb	350 lb	438 lb	
Starter (12-Volt)	** Manual Engagement			Automatic Engagement	
Direction of Crankshaft Rotation (Viewed from Rear)	Clockwise		Counter-clockwise	Clockwise	

*Weights are approximate and will vary with engine model changes and optional accessories installed.

**Model 172 Skyhawks and Model 175 Skylarks have automatic engagement beginning in 1961.

SHOP NOTES:

SHOP NOTES:

12-4. TROUBLE SHOOTING.

PROBABLE CAUSE	ISOLATION PROCEDURE	REMEDY
ENGINE FAILS TO START.		
Improper use of starting procedure.		Review starting procedure.
Restriction in fuel lines.	Disconnect fuel lines from carburetor. If fuel does not flow from disconnected line, loosen line at other connections until restriction is located.	Remove and clean or replace lines as necessary.
Defective magneto switch or grounded magneto leads.	Check continuity of switch and magneto leads.	Repair/replace switch or leads.
Spark plugs fouled by moisture or deposits.	Remove several spark plugs and check visually.	Remove and clean all spark plugs. Replace if defective.
Defective carburetor.	If engine will start on primer but stops when mixture is placed in full rich position and priming is discontinued, the carburetor is defective.	Repair or replace carburetor.
Failure of magneto impulse couplings, if used.	With ignition switch off, rotate propeller slowly by hand and listen for loud clicks as impulse couplings operate.	Repair or replace magnetos.
Failure of starting vibrator, if used.	Turn starter circuit switch "OFF" (1961 only). Turn master switch "ON." Turn ignition switch to "START." Do NOT push in on 1962 and on. Buzzing sound denotes vibrator is operating.	Replace starting vibrator.
Excessive induction air leaks.	Check visually.	Correct the cause of leaks.
Water in fuel system.	Open fuel strainer drain valve and check for water.	Drain fuel tank sumps, fuel lines, fuel strainer and carburetor.
ENGINE STARTS BUT DIES.		
Water in fuel system and/or carburetor.	Open fuel strainer drain valve and check for presence of water in fuel.	Drain fuel tank sumps, fuel lines, fuel strainer, and carburetor bowl.
Moisture on spark plug electrodes.	Remove several spark plugs and check condition of electrodes.	Remove and clean all spark plugs.
Defective carburetor.	If engine will start on primer but stops when mixture is placed in full rich position and priming is discontinued, the carburetor is defective.	Repair or replace carburetor.
Excessive induction system air leaks.	Check visually.	Determine cause of leaks and correct.
Obstructed air intake.	Check visually.	Remove obstructions; service air filter if necessary.

ENGINE STARTS BUT DIES. (Cont).		
Mixture control defective.	Check for proper operation.	Replace and rig properly.
ENGINE WILL NOT IDLE PROPERLY.		
Spark plugs fouled or improperly gapped.	Perform ignition check. Excessive rpm drop on one or both magnetos usually indicates defective spark plugs.	Remove all spark plugs; clean, regap, and test. Replace if defective.
Carburetor idle mixture not properly adjusted.	Perform an idle mixture check.	Adjust idle mixture.
Air leak in induction system after carburetor, creating a lean mixture.	Operate engine above idle rpm. Mixture will be lean at all power settings and operation will be erratic. Cylinder head temperature may be above normal.	Determine cause of leak and correct.
Engine primer valve leaking causing a rich mixture.	Stop engine, disconnect primer line at primer distributor. With primer closed and mixture control in IDLE CUTOFF, check for fuel flow at disconnected line. If fuel flows, primer is leaking.	Replace primer.
Leaking float valve or float level set too high.	Perform an idle mixture check. Attempt to remove any rich identification with idle mixture adjustment. If the rich indication cannot be removed, the float valve is leaking or the float level is set too high.	Replace defective parts; reset float level.
Fuel contamination.	Open fuel strainer drain valve and check for contamination.	Drain fuel tank sumps and fuel lines. Disassemble and clean carburetor and fuel strainer.
Incorrect ignition timing or defective breaker points.	Check timing and breaker points.	Time correctly; replace defective points.
ENGINE DOES NOT ACCELERATE PROPERLY.		
Idle mixture set too lean.	Perform an idle mixture check.	Adjust idle mixture.
Defective or badly adjusted accelerating pump in carburetor.	Check setting of accelerating pump linkage.	Change accelerating pump adjustment.
Float level set too low.	Check float level.	Reset float level.
ENGINE FAILS TO STOP WHEN MIXTURE CONTROL IS PLACED IN IDLE CUTOFF.		
Mixture control linkage improperly rigged.	Check mixture arm at carburetor for full travel.	Rig correctly.
Fuel leaking through engine primer valve.	With primer closed disconnect primer line at primer distributor to check for fuel flow. Flow will indicate defective primer.	Replace primer valve.

ENGINE FAILS TO STOP WHEN MIXTURE CONTROL IS PLACED IN IDLE CUTOFF (Cont).		
Leaking mixture metering valve in carburetor.	With engine stopped, place mixture control in IDLE CUTOFF and turn fuel selector valve on. Remove carburetor air filter and inspect inside of carburetor for evidence of fuel draining.	Overhaul or replace carburetor.

SHOP NOTES:

12-5. ENGINE REMOVAL. Although the routing and location of wires, cables, lines, hoses, and controls vary between the different models, the following general procedure may be followed. When disconnecting these parts, it is a good practice to code or tag the parts to aid in reinstallation. Similarly, shop notes made at removal will often clarify reinstallation procedures.

a. Remove the engine cowling and drain engine oil.
b. Turn off fuel selector valve or fuel shut-off valve.
c. Remove the spinner and propeller. Cover the exposed end of the crankshaft or propeller shaft on engines with constant-speed propellers to prevent the entry of dust and dirt.
d. Disconnect hot and cold air flexible hoses.
e. Except on the Model 150, remove the exhaust stacks. Some exhaust stacks have braces which must be disconnected or removed. The exhaust stacks on some models are made in sections, joined by clamps, to facilitate removal. On the Model 150, the engine can be removed with the exhaust stacks attached.

NOTE

During the following procedure remove any clamps which secure controls, wires, hoses, or lines to the engine, engine mount, or attached brackets, so they will not interfere with engine removal. Some of the items listed can be disconnected at more than one place. It may be desirable to disconnect some of these items at other than the places indicated. The reason for engine removal should be the governing factor in deciding at which point to disconnect them. Omit any of the items which are not present on a particular engine installation.

f. Tag and disconnect:
1. Propeller governor control at governor.
2. Induction air control at airbox.
3. Throttle and mixture controls at carburetor.

NOTE

Remove the carburetor airbox on those models where it interferes with engine removal.

4. Oil breather and vacuum system oil separator vent lines where secured to engine mount.
5. Ignition switch leads at magnetos.
6. Electrical wires at generator.
7. Cylinder head temperature thermocouple or bulb at cylinder.
8. Oil temperature bulb or oil temperature electrical connector at engine.
9. Oil pressure line or hose at firewall, or electrical wires at oil pressure transmitter on engine.
10. Tachometer cable at engine tachometer drive.
11. Electrical wires at starter.
12. Starter control at starter.
13. Manifold pressure line or hose at manifold.
14. Fuel and primer lines and hoses at engine.
15. Vacuum system suction hose at vacuum pump.

g. On tricycle gear aircraft, place a padded stand under the tailcone.
h. Attach a hoist to the hoisting lug on top of the engine and take up engine weight on hoist.
i. Check for and disconnect or remove any other items which would interfere with engine removal.
j. Remove bolts attaching engine to engine mount, and slowly hoist the engine and pull it forward. Balance the engine by hand and carefully guide the disconnected components out of the engine assembly. Remove engine shock mount assemblies.

12-6. CLEANING. After engine removal, both the removed engine and the firewall should be thoroughly cleaned. Solvent may be applied with a spray gun or brush, and allowed to soften and dissolve grease deposits, before compressed air is used to remove the heavy accumulations of dirt.

CAUTION

Particular care should be given to electrical items before cleaning. Solvent should not be allowed to enter magnetos, starters and generators; hence these items should be protected or removed before saturating the engine with solvent. Any oil or fuel openings on the engine should be plugged before washing down the engine with solvent.

Caustic cleaning solutions should be used cautiously and should always be properly neutralized after their use.

If the engine will stand idle or will not be worked on for more than a few days it should be protected against internal corrosion by spraying corrosion-preventive oil into the cylinders and the installation of dehydrator plugs in the spark plug holes. An engine which has been operated on highly leaded fuels is particularly susceptible to upper cylinder corrosion.

12-7. REMOVAL OF ENGINE ACCESSORIES for overhaul or for engine replacement involves stripping the engine of parts, accessories and components to reduce it to the bare engine. During the disassembly process removed items should be examined carefully; defective parts should be tagged for repair or replacement.

NOTE

Items easily confused with similar items should be tagged to provide a means of identification when being installed on a new engine. All openings exposed by the removal of an item should be closed by installing a suitable cover or cap over the hole. This will prevent entry of foreign particles. If suitable covers are not available, tape may be used to cover the openings.

12-8. ENGINE DISASSEMBLY AND OVERHAUL should be performed in accordance with Continental Motors Corporation instructions.

12-9. POWERPLANT BUILD-UP consists of the installation of parts, accessories and components to the basic engine to build up a powerplant unit ready for installation on the airplane. All safety-wire, lockwashers, palnuts, elastic stop nuts, gaskets and rubber connections should be new parts.

12-10. ENGINE INSTALLATION.

a. Install any parts removed after the engine was removed, then hoist engine near the engine mount and carefully route controls, lines, and hoses in place as the engine is positioned in the engine mount. Be sure engine shock mount assemblies are in place and that any ground straps that were removed are reinstalled.

b. Install engine mount bolts. When tightening, use the standard torque values listed in Section 1.

c. Remove cover from end of crankshaft or propeller shaft and install propeller and spinner.

d. Service the engine with the proper grade and amount of oil.

e. Remove hoist. Remove padded stand placed under tailcone of tricycle gear aircraft.

NOTE

During the following procedure reinstall any clamps which secure controls, wires, hoses, or lines to the engine, engine mount, or attached brackets. Some items may have been disconnected at other than the places indicated. Omit any of the items not present on a particular engine installation.

f. Identify and connect:

1. Vacuum system suction hose at vacuum pump.
2. Fuel and primer lines and hoses at engine.
3. Manifold pressure line or hose at manifold.
4. Starter control at starter. Refer to figure 12-1 for adjustment of the control.
5. Electrical wires at starter.
6. Tachometer cable at engine tachometer drive.
7. Oil pressure line or hose at firewall, or electrical wires at oil pressure transmitter on engine.
8. Oil temperature bulb or oil temperature electrical connector at engine.
9. Cylinder head temperature thermocouple or bulb at cylinder.
10. Electrical wires at generator.
11. Ignition switch leads at magnetos.
12. Oil breather and vacuum system oil separator vent lines where secured to engine mount.

NOTE

Install carburetor airbox, if removed.

13. Throttle and mixture controls at carburetor. Rig per paragraph 12-38.
14. Induction air control at airbox. Rig per paragraph 12-38.
15. Propeller governor control at governor. Rig per paragraph 14-26.

g. Install exhaust stacks, shrouds, exhaust stack braces, and hot and cold air flexible hoses. Use new exhaust gaskets regardless of apparent condition of those removed.

h. Install engine cowling.

i. Perform engine run-up and make final adjustments on engine and propeller controls.

j. Check complete engine installation for proper security, correct routing of controls, lines, hoses, and wires, proper safetying, and tightness of all connections.

k. Check cowl flap adjustment.

12-11. EXTREME WEATHER MAINTENANCE.

12-12. COLD WEATHER.

12-13. Cold weather starting will be made easier by the installation of an oil dilution system, a multi-cylinder priming system, and a ground service receptacle (refer to paragraph 12-15). If these aids are not installed, the following procedure may be accomplished.

After the last flight of the day, drain the engine oil into a clean retainer so the oil can be preheated. Cover the engine to prevent ice or snow from collecting inside the cowling. When preparing the aircraft for flight or engine run-up after these conditions have been followed, preheat the drained oil. After preheating the oil, gasoline may be mixed with the oil in a ratio of 1 part gasoline to 12 parts oil before pouring into the engine oil sump. If the free air temperature is below -29°C (-20°F), the engine compartment should be preheated by a ground heater. After the engine compartment has been preheated, inspect all engine compartment drain and vent lines for presence of ice. After this procedure has been followed, pull the propeller through several revolutions by hand before starting the engine.

WARNING

Do not heat oil above 121°C (250°F). A flash fire may result. Before pulling propeller through, insure that magneto switch is in the OFF position to prevent engine from firing.

CAUTION

Due to the desludging effect of the diluted oil, engine operation should be observed closely during the initial warm-up of the engine. Engines that have a considerable amount of operational hours accumulated since their last dilution period may be seriously affected by the dilution process. This will be caused by the diluted oil dislodging sludge and carbon deposits within the engine. This residue will collect in the oil sump and possibly clog the screened inlet to the oil pump. Small deposits may actually enter the oil pump and be trapped by the main oil filter screen. Partial or, in some cases, complete loss of engine lubrication may result from either condition. If these conditions are anticipated after oil dilution, the engine should be run for several minutes at

normal operating temperatures and then stopped and inspected for evidence of sludge and carbon deposits in the oil sump, oil cooler, and oil filter screen. Future occurence of this condition can be prevented by diluting the oil prior to each oil change. This will prevent the built-up accumulation of the sludge and carbon deposits within the engine.

Winterization Kits are available for all models. The kits are essentially devices to restrict the entry of air through the front opening of the cowl, or to restrict the outlet of air at the rear opening of the cowl. All kits are designed for easy installation on the aircraft and should be used in accordance with instructions accompanying the kits.

12-14. LOW BATTERY STARTING.

12-15. If a ground service receptacle is installed, the use of an external power source is recommended for low battery starting. Before connecting a generator type external power source, it is important that the master switch be turned on. This will enable the battery to absorb transient voltages which otherwise might damage the transistors in the audio amplifier. When using a battery type external power source, the master switch should be turned off. Starting may also be accomplished by hand-cranking or using a 12-volt automobile system as external power. These methods are outlined in the following paragraphs.

12-16. HAND-CRANKING. A normal hand-cranking procedure may be used on all aircraft with impulse coupling equipped magnetos. These include all Model 150, 172 and 175 aircraft, and all Model 180 and 182 aircraft prior to 1961. Beginning in 1961, ignition for starting on Models 180, 182, and 185 is supplied by the battery and a starting vibrator system, rather than the familiar impulse-coupling equipped magnetos. Since a retarded spark for starting can only be obtained in the "START" position of the key-operated ignition switch, 1961 models of these aircraft are provided with a starter circuit "ON-OFF" switch so that the starter can be disconnected before hand-propping is attempted. Beginning in 1962, a push-to-start ignition switch, which eliminates the need for a starter circuit switch, is used on these models. Use the following procedure.

MODELS 180, 182 AND 185 (1961 ONLY):

a. Pull master switch ON momentarily to see if battery power is sufficient to close the battery solenoid. Illumination of the generator warning light or movement of a fuel gage pointer indicates that the solenoid is closed and manual starting is possible. If battery power is not sufficient to close the solenoid, hand starting is impossible, since the starting vibrator requires battery power.

b. Be sure to use wheel chocks if available, and test and set the brakes.

c. Set controls and switches for a normal start, except leave the ignition switch "OFF" and turn the starter circuit switch "OFF."

d. Pull propeller through at least two full revolutions to prime each cylinder (ignition switch still "OFF"). Operate primer as propeller is being pulled through.

NOTE

On the Model 185, with the auxiliary fuel pump operating, engine flooding is possible. Avoid prolonged use of the pump.

e. With ignition switch held in the "START" position, hand-crank the engine.

WARNING

Do not hand-crank with the ignition switch on "BOTH," "L," or "R." In these positions, kick-back or reverse rotation may occur, since the magnetos do not have impulse couplings to retard the spark. Also, be sure the starter circuit switch is placed in the "OFF" position before hand-cranking the engine.

f. As soon as the engine fires, immediately release the spring-loaded ignition switch to "BOTH" for better engine acceleration.

g. Return starter circuit switch to "ON" for normal operation.

MODELS 180, 182 AND 185 (1962 & ON):

a. Omitting all references to the starter circuit switch, use the foregoing procedure for hand-cranking. When the ignition switch is held in the "START" position, do NOT push it in.

NOTE

On the 172 Skyhawk and the 175 Skylark, which also use a push-to-start ignition switch (1962 and on), the ignition switch is turned to "BOTH" during normal hand-cranking, since the magnetos use impulse couplings which automatically retard the spark for starting.

12-17. USING 12-VOLT AUTOMOBILE AS EXTERNAL POWER. It is often possible to use a 12-volt automobile to supply current to a low battery for starting. Using jumper cables, connect the terminals of the automobile battery to the terminals of the aircraft battery. Operate the automobile engine at a fast idle for maximum output of the generator.

CAUTION

Make sure the jumper cables are connected to like terminals on the two batteries. Crossing the terminals will discharge the batteries. When connecting the jumper cables to the terminals, always connect them to the aircraft battery first and disconnect them from the aircraft battery last.

SHOP NOTES:

12-18. (DELETED)

12-19. HOT WEATHER.

12-20. During extremely hot weather, fuel may vaporize in the carburetor, fuel lines, and hoses. This will be indicated by difficulty in starting, erratic operation, or engine stoppage after starting. To correct this condition, remove the carburetor vent plug and purge the carburetor by turning the fuel selector valve on. Purge the carburetor in this manner until fuel stands level with the vent plug opening. Replace the carburetor vent plug and operate the engine to make sure that the condition has been corrected.

12-21. DUSTY CONDITIONS.

12-22. Dust inducted into the intake system of the engine is probably the greatest single cause of early engine wear. Under high dust conditions the carburetor air filter should be serviced daily as outlined in Section 2. Anti-dust kits are available for some airplanes.

12-23. SEACOAST AREAS, HUMID AREAS.

12-24. In salt water areas special care should be given to keep the engine and accessories clean to prevent oxidation. Fuel and oil should be checked frequently and drained of condensed moisture in humid areas.

SHOP NOTES:

12-25. STARTING SYSTEMS.

12-26. MANUALLY ENGAGED STARTING SYSTEMS employ a manually operated overrunning clutch drive pinion to transmit power from the electric starter motor to the crankshaft starter drive gear. A knob or handle on the instrument panel is connected by a flexible control to a lever on the starter. This lever shifts the starter drive pinion into the engaged position, then closes the starter switch contacts when the starter knob or handle is pulled. The starter lever is attached to a return spring which returns the lever and the flexible control to the off position. When the engine starts, the overrunning action of the clutch protects the starter drive pinion until the shift lever can be released to disengage the pinion.

12-27. REMOVAL OF STARTER AND DRIVE.
a. Disconnect flexible starter control and return spring from starter lever by removing attaching nut and bolt.
b. Remove starter power cable from starter switch terminal; tape or insulate cable end.
c. Remove three palnuts and three hex nuts attaching starter adapter to crankcase cover studs.
d. Remove safety wire and two 5/16 bolts threaded through crankcase into starter.
e. Tap starter gently to loosen gasket and remove the starter and adapter with a straight rearward movement.

12-28. INSTALLATION OF STARTER AND DRIVE.
a. Apply engine oil to starter pinion and reduction gear teeth, work a non-hardening gasket paste into both sides of a new starter gasket and position starter and adapter against crankcase pad.
b. Install three plain hex nuts on studs and two bolts through crankcase.

CAUTION

Tighten nuts and bolts evenly to prevent warping adapter coverplate.

c. Install palnuts on cover studs and lock wire on bolt heads.
d. Connect starter cable, starter control and return spring.
e. Rig control and starter adjusting stud to obtain the travel and clearance specified in figure 12-1.

12-29. AUTOMATICALLY ENGAGED STARTING SYSTEMS employ an electric starter motor mounted to a 90-degree adapter. A starter solenoid is activated by the push-button or ignition key on the instrument panel. When the solenoid is activated, its contacts close and electrical current energizes the starter motor. Initial rotation of the starter motor engages the starter through an overrunning clutch in the starter adapter, which incorporates worm reduction gears. The starter is located just aft of the right rear cylinder.

12-30. REPLACEMENT OF STARTER.
a. Disconnect electrical leads to the starter solenoid. On some models the solenoid is located on the firewall and only the power cable need be disconnected from the starter. Insulate the disconnected terminals as a safety precaution.
b. Remove the nuts securing the starter and remove the starter.
c. To install the starter, reverse this procedure.

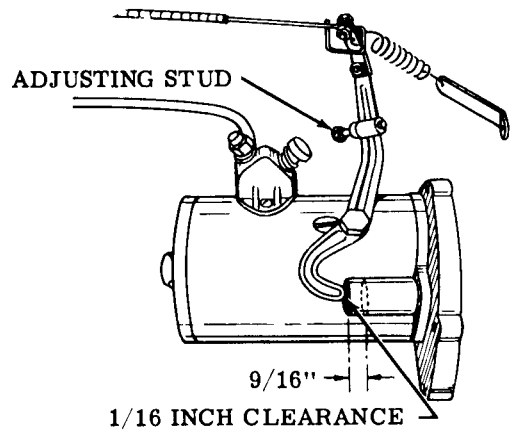

There is 9/16 inch of travel at the starter gear pinion. It is important that the starter lever compress the starter pinion gear 7/16 inch before contacting the starter switch, the remaining 1/8 inch of travel is used in making the electric contact of the starter switch.

Figure 12-1. Starter Lever Adjustment

12-31. REPLACEMENT OF STARTER ADAPTER.
a. Remove the starter.
b. On those models where the generator drive pulley is located at the starter adapter, loosen the generator and remove the generator drive belt from the pulley. On those models where the vacuum pump is attached to the starter adapter, remove the vacuum pump mounting nuts and move the pump far enough to permit removal of the starter adapter.
c. Remove the generator support brackets on those models where they attach to the starter adapter.
d. Remove the thru-bolts securing the adapter to the engine and pull it aft to remove.
e. Reverse the procedure outlined above to install the adapter. Use a new gasket coated with non-hardening gasket compound between the engine pad and the starter adapter.

12-32. STANDARD MAINTENANCE of starters includes replacing brushes and brush springs, cleaning dirty commutators and turning down burned or out-of-round commutators. Starter drive units may be lubricated with engine oil, but never with heavy oil or grease which might prevent normal action of the drive or overrunning clutch mechanism.

CAUTION

Never lubricate the commutator. Do not attempt to lubricate the starter bearings while the starter is being operated. Some starter bearings are sealed and require no lubrication.

Starter brushes should be replaced when worn down to one-half their original length (compare with new ones). Brush spring tension should be sufficient to give brushes a good firm contact with the commutator. Brush leads should be unbroken, with their terminal screws tight. A glazed or dirty commutator can be cleaned by holding a strip of 00 sandpaper or a brush seating stone against it. Move the sandpaper or stone back and forth across the commutator to avoid wearing a groove. Do not use emery paper or carborundum because of their possible shorting action.

CAUTION

Never operate the cranking motor for more than 30 seconds at a time without allowing it to cool. Blow out all dust after the commutator is cleaned.

Roughness, out-of-roundness, or high mica may necessitate turning down the commutator. After the turning operation, the mica should be undercut.

12-33. OVERRUNNING CLUTCH CHECK.

CAUTION

Never clean the overrunning clutch by any degreasing or high temperature method; such cleaning will destroy pre-packed lubricant in the clutch. Brushing with oleum or neutral spirits is satisfactory.

a. Wipe the clutch with a clean cloth.
b. Check that drive pinion will rotate freely in overrunning direction and that it does not slip in the cranking direction.

NOTE

If pinion turns roughly or slips in the cranking direction, replace the overrunning clutch assembly.

12-34. TROUBLE SHOOTING THE STARTER (ALL MODELS).

PROBABLE CAUSE	ISOLATION PROCEDURE	REMEDY
STARTER WILL NOT OPERATE.		
Defective master switch or circuit.	Check master circuit.	Repair circuit.
Defective starter switch or switch circuit.	Check switch circuit continuity.	Replace switch or wires.
Starter lever does not activate switch.	Check starter lever adjustment.	Adjust per figure 12-1.
Defective starter.	Check through items above. If another cause is not apparent, starter is defective.	Remove and repair or replace starter.
STARTER MOTOR RUNS, BUT DOES NOT TURN CRANKSHAFT.		
Starter lever adjusted to activate switch without engaging pinion with crankshaft gear.	Check starter lever adjustment.	Adjust per figure 12-1.
Defective overrunning clutch or drive.	Remove starter and check starter drive and overrunning clutch.	Replace defective parts.
Damaged starter pinion gear or crankshaft gear.	Remove starter and check pinion gear and crankshaft gear.	Replace defective parts.
STARTER DRAGS.		
Low battery.	Check battery.	Charge or replace battery.
Starter switch or relay contacts burned or dirty.		Replace with serviceable unit.
Defective starter power cable.	Check cable.	Replace cable.

STARTER DRAGS (Cont).		
Defective starter.	Check starter brushes, brush spring tension, thrown solder on brush cover.	Repair or replace starter.
Dirty, worn commutator.	Clean, check visually.	Turn down commutator.
STARTER EXCESSIVELY NOISY.		
Worn starter pinion.	Remove and examine pinion.	Replace starter drive.
Worn or broken teeth on crankshaft gears.	Remove starter and turn over engine by hand to examine crankshaft gear.	Replace crankshaft gear.

NOTE

The starter and drive mechanism illustrated applies specifically to that used on the O-470 and IO-470 series engines. However, the O-300 series engines that do not have manual engagement are furnished with a similar installation, the major difference being that the starter gear shaft drives the vacuum pump instead of the generator drive pulley.

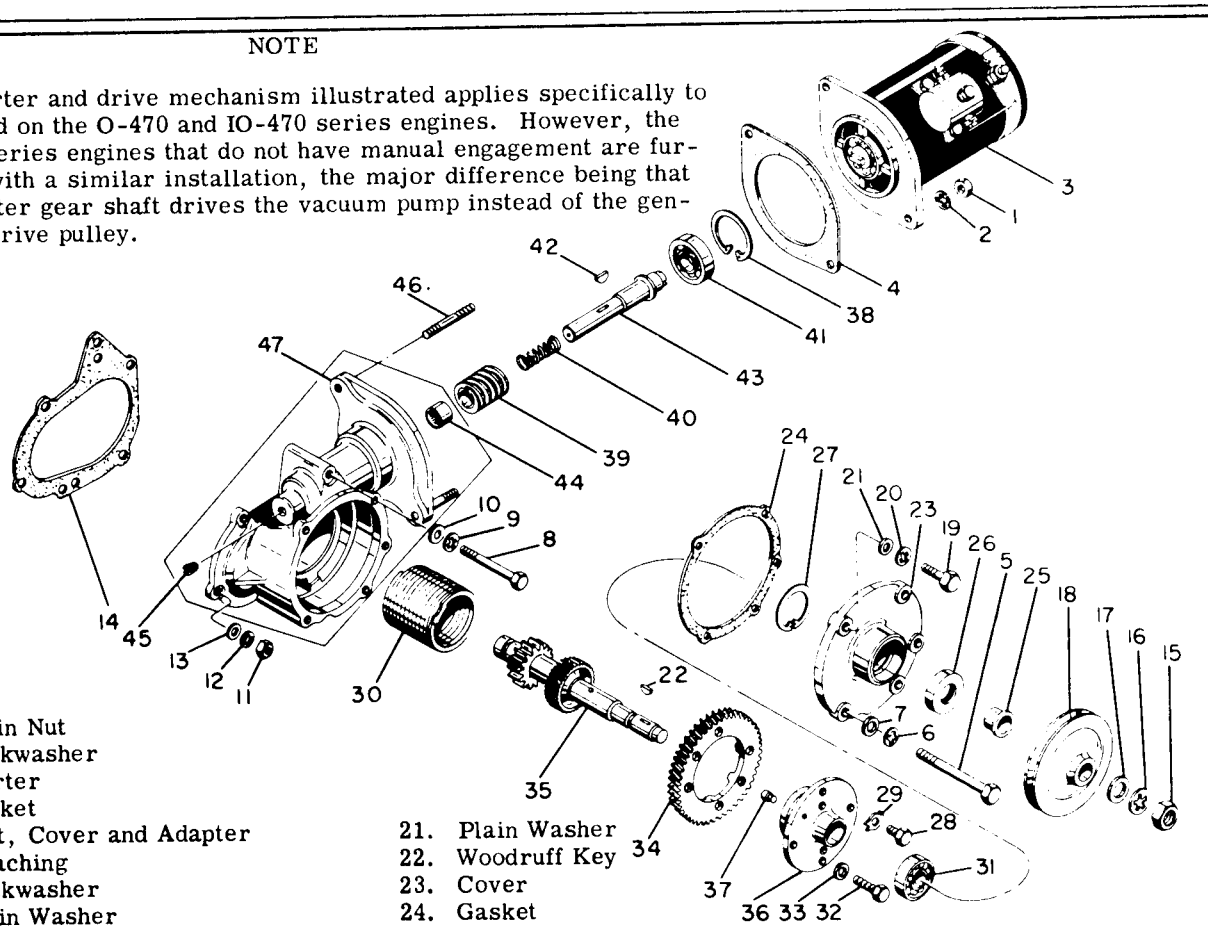

1. Plain Nut
2. Lockwasher
3. Starter
4. Gasket
5. Bolt, Cover and Adapter Attaching
6. Lockwasher
7. Plain Washer
8. Bolt, Adapter Attaching
9. Lockwasher
10. Plain Washer
11. Plain Nut
12. Lockwasher
13. Plain Washer
14. Gasket
15. Plain Nut
16. Lockwasher
17. Plain Washer
18. Generator Drive Sheave (Pulley)
19. Bolt, Cover
20. Lockwasher
21. Plain Washer
22. Woodruff Key
23. Cover
24. Gasket
25. Sleeve
26. Oil Seal
27. Retaining Ring
28. Bolt, Spring Retaining
29. Tab Washer
30. Clutch Spring
31. Bearing
32. Bolt
33. Lockwasher
34. Starter Worm Wheel
35. Starter Gear Shaft
36. Starter Clutch Drum
37. Stepped Dowel
38. Retaining Ring
39. Starter Worm Gear
40. Spring
41. Bearing
42. Woodruff Key
43. Worm Drive Shaft
44. Bearing
45. Plug
46. Stud
47. Adapter

Figure 12-2. Starter and Starter Drive

12-35. ENGINE CONTROLS.

12-36. Engine controls of the push-pull type include the throttle, mixture control, propeller pitch control and carburetor heat control. Most engine controls are equipped with position-locking devices which prevent vibration-induced "creeping" of the controls.

12-37. RIGGING ENGINE CONTROLS.

12-38. When adjusting any engine control, it is important to check that the control slides smoothly throughout its full travel, that it locks securely if equipped with a locking device, and the arm or lever which it operates moves through its full arc of travel.

INDUCTION AIR CONTROL RIGGING:

a. Loosen the clamp securing the control to the bracket on the airbox.
b. Push control full in, then pull it out approximately 1/8 inch for cushion.
c. Shift the control housing in its clamp so that the air valve lever is full forward, with valve seating inside the airbox. Tighten clamp in this position.
d. Pull the control out and check that the air valve inside the airbox seats in the opposite direction.
e. Check that the bolt and nut at the air valve lever secure the control wire and that the bolt will swivel in the lever.
f. Bend the wire tip 90° to prevent it from being withdrawn if the attaching nut should become loose.
g. When installing a new control, it may be necessary to shorten the wire and/or control housing.
h. The air valve must seat in both positions and the control should have approximately 1/8 inch cushion at the instrument panel when pushed full in.

THROTTLE CONTROL RIGGING:

NOTE

Before rigging the throttle control on aircraft with the type control shown in figure 12-3, check that staked connection (4) between rigid conduit (2) and flexible conduit (3) is secure. If any indications of looseness or breakage is apparent, replace the throttle control before continuing.

a. Pull throttle control out (idle) and remove the throttle knob.
b. Screw jamb nut (7) all the way down (clockwise) and reinstall the throttle knob. Screw the knob securely against the jamb nut. Do NOT back the jamb nut out. This will prevent bottoming and possible damage to the stacked connection.
c. Disconnect the throttle control at the engine, push the control in until jamb nut hits friction lock (6) while the friction lock is loose, then pull the control out approximately 1/8 inch for cushion.
d. Tighten friction lock (6), being careful not to change the position of the throttle.
e. Move the throttle arm on the carburetor to full open, adjust end of control to fit, and connect to arm on carburetor.
f. Release friction lock and check for full travel of arm on carburetor. If further adjustment is required, make all adjustments at the carburetor end of control. Do NOT change jamb nut (7) setting.

MIXTURE CONTROL RIGGING:

a. Push mixture control full in, unlock, and pull it out approximately 1/8 inch for cushion.
b. Loosen the clamp securing the control to the engine.
c. Shift the control housing in its clamp so that the mixture arm on the carburetor is full open. Tighten the clamp in this position.
d. Unlock and pull mixture control full out. Check that mixture arm on the carburetor is full closed.
e. Check that the bolt and nut at the mixture arm on the carburetor secure the control wire and that the bolt will swivel in the arm.
f. Bend the wire tip 90° to prevent it from being withdrawn if the attaching nut should become loose.
g. When installing a new control, it may be necessary to shorten the wire and/or control.
h. The mixture arm on the carburetor must contact the stops in each direction, and the control should have approximately 1/8 inch cushion when pushed full in.

12-39. IDLE SPEED AND MIXTURE ADJUSTMENT should be accomplished after the engine has been warmed up sufficiently. Since idle rpm may be affected by idle mixture adjustment it may be necessary to readjust the idle rpm after setting the mixture correctly.

a. Set the throttle stop screw to obtain between 500 and 600 rpm, with throttle control pulled full out.

NOTE

The idle speed may vary between different aircraft models, and between different engines

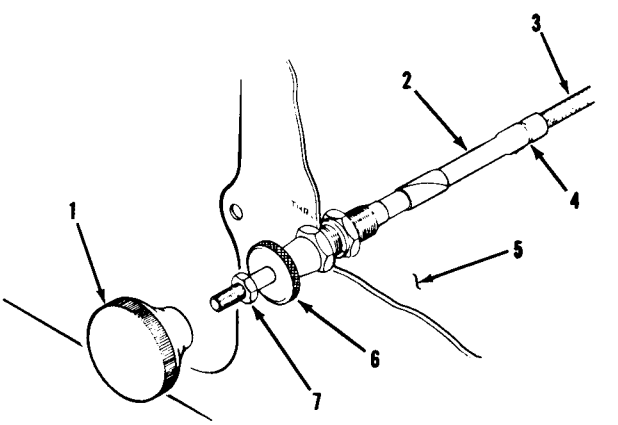

1. Knob
2. Rigid Conduit
3. Flexible Conduit
4. Staked Connection
5. Instrument Panel
6. Friction Lock
7. Jamb Nut

Figure 12-3. Throttle Control

on the same models. Important points to remember are that the engine should idle smoothly, without excessive vibration, and that the idle speed should be high enough to maintain proper idling oil pressure and preclude any possibility of the engine stopping in flight when the throttle is closed.

b. Pull mixuture control knob slowly and steadily into "idle cut-off" position, observing tachometer, then move control to full rich before engine stops.

NOTE

An increase of 10 to 20 rpm while "leaning out," indicates the idle mixture is correct. An increase of more than 20 rpm indicates idle mixture is too rich. An immediate decrease in rpm indicates idle mixture is too lean. Similiarly, the manifold pressure gage will indicate idle mixture adjustment. If, as the mixture is moved toward "idle cut-off," manifold pressure drops slightly (corresponding to the momentary increase in rpm), the idle mixture is correct. If manifold pressure drops excessively (corresponding to an excessive rpm increase), the idle mixture is too rich. An immediate increase in manifold pressure (corresponding to an immediate decrease in rpm) indicates the mixture is too lean.

c. If idle mixture is too rich or too lean, correct by adjusting the idle mixture adjusting screw at the upper end of the carburetor intake throat. Turning the screw in (clockwise) leans the idle mixture and turning it out (counterclockwise) richens the idle mixture.

d. When checking or setting idle rpm and idle mixturn, run the engine up to 1500 rpm to "clear" it between checks. False results may be obtained from fouled spark plugs.

SHOP NOTES:

SHOP NOTES:

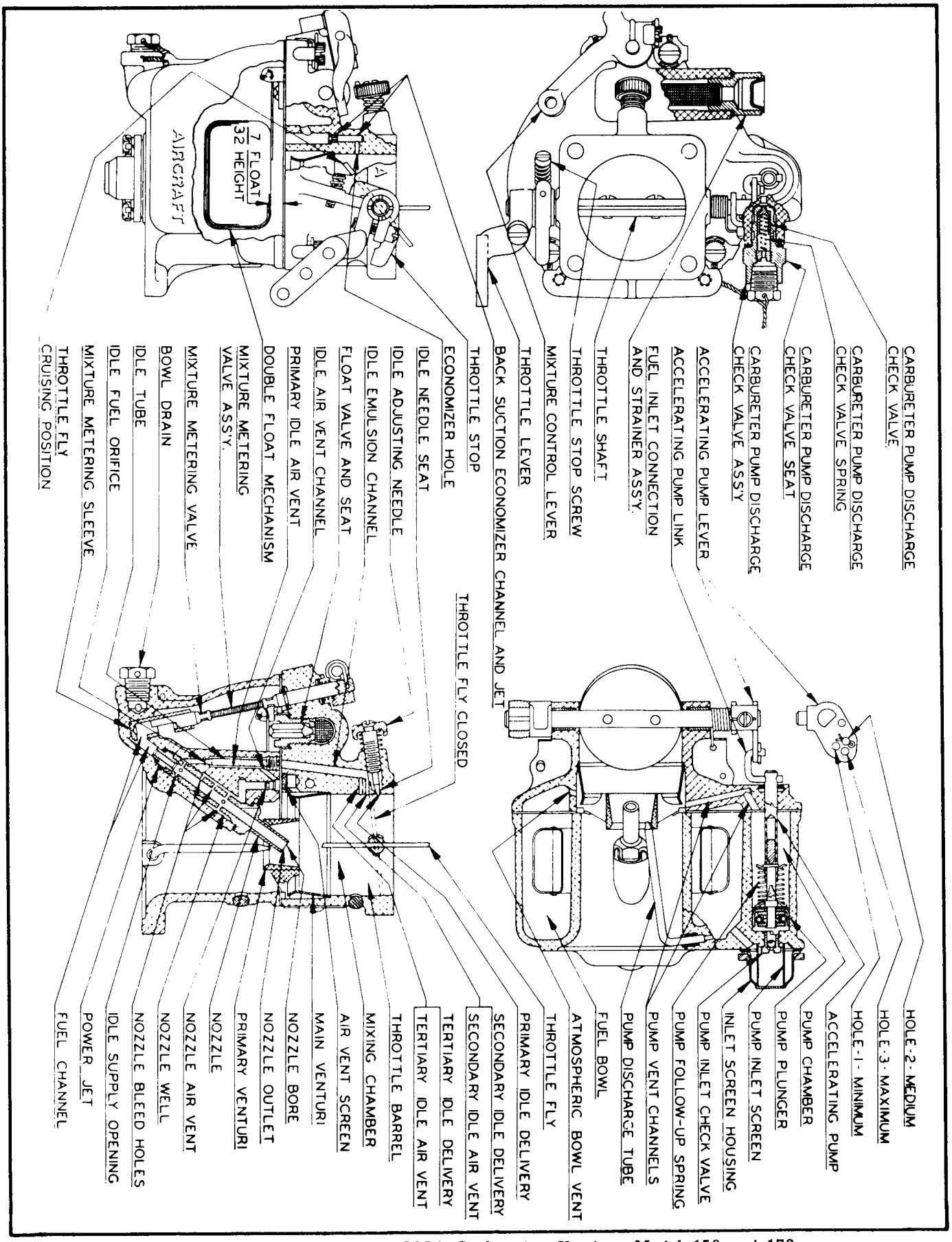

Figure 12-4. Details of MA3SPA Carburetor Used on Model 150 and 172

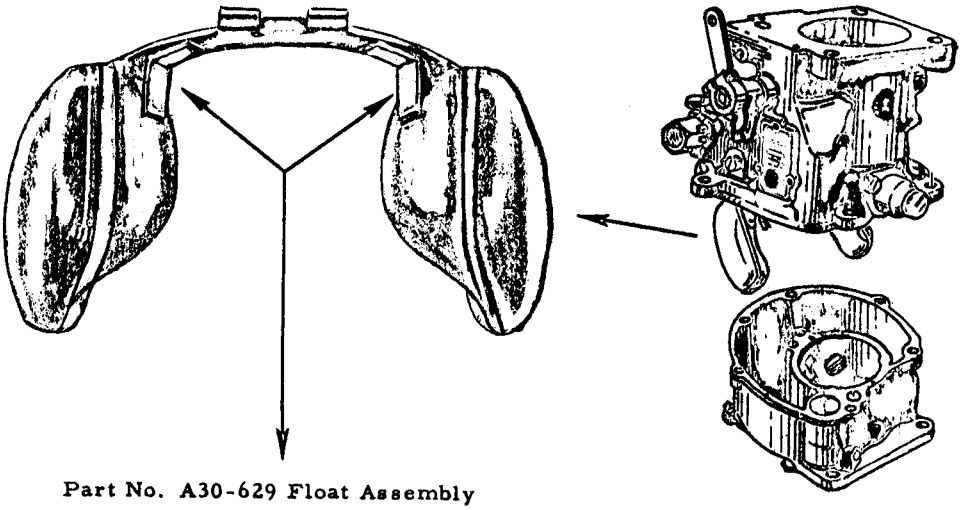

Part No. A30-629 Float Assembly

CARBURETORS AFFECTED: Model MA4-5; MA4-5AA previous to serial #3999575

We have improved Part No. A30-629 float assembly by the addition of a rigid reinforcing brace at the junction of the float and lever as shown. This will eliminate any possibility of float separation due to excessive vibration.

It is our recommendation that all Model MA4-5 and MA4-5AA aircraft carburetors previous to serial #3999575 be modified by changing to this new improved float at the time the carburetor is removed from the engine for inspection or routine overhaul. All Model MA4-5 and MA4-5AA carburetors from serial #3999575 on, will be equipped with this improved float.

NOTE

Marvel Schebler Service Bulletin 4-59, a later bulletin than the above, states that a new solid rubber float assembly is being used after serial #4012824 and for all spares. It is recommended that all carburetors prior to serial #3999575 have either the reinforced metal float assembly or the new rubber float assembly installed as soon as possible. The new rubber floats are superior to the metal floats.

There will be no change in the normal float setting of Model MA4-5 and MA4-5AA carburetors as a result of this float change.

Float setting for all Model MA4-5 and MA4-5AA is 13/64" measured from the bowl gasket to the top of float as shown.

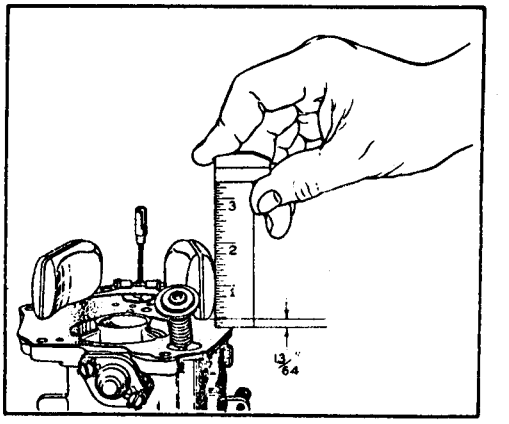

Figure 12-5. Exerpts From Marvel Schebler Service Bulletin No. 5-57

12-40. IGNITION.

NOTE

It is recommended that at each 100-hour inspection the lower spark plugs be installed in the upper holes in the cylinders, and vice versa. Since deterioration of lower spark plugs is usually more rapid than that of upper plugs, rotating them helps prolong spark plug service life.

12-41. Bendix-Scintilla and Slick (formerly Case) magnetos are used on Cessna aircraft. Details of the magnetos and ignition schematics for the various airplanes are shown in figures 12-6 through 12-14. Following is a timing chart showing the number of degrees before top center at which each magneto should fire.

MODEL	L. MAGNETO	R. MAGNETO
IO-470-F	20°	20°
O-470-A	26°	26°
O-470-J	20°	20°
O-470-K, L, R	22°	22°
GO-300-A, C, D, E	28°	28°
O-300-A, C, D	28°	26°
O-200-A	28°	28°

Always use a timing light for accuracy when timing.

WARNING

During all magneto maintenance always take proper precautions to make sure the engine cannot fire or start.

12-42. SLICK MAGNETOS.

12-43. Slick magnetos contain a conventional two-pole rotating magnet (rotor), mounted in ball bearings. Driven by the engine through an impulse coupling at one end, the rotor shaft operates the breaker points at the other end. The nylon rotor gear drives a nylon distributor gear which transfers high-tension current from the wedge-mounted coil to the proper outlet in the distributor block. A coaxial capacitor is mounted in the distributor block housing to serve as the condenser as well as a radio noise suppressor. Both nylon gears are provided with timing marks for clockwise or counterclockwise rotation, and the distributor gear and distributor block have timing marks, visible through the air vent holes, for timing to the engine. A timing hole is provided in the bottom of the magneto adjacent to the magneto flange. A timing pin (or 6-penny nail) can be inserted through this timing hole into the mating hole in the rotor shaft to lock the magneto approximately in the proper firing position. The breaker assembly is accessible after removing the screws fastening the magneto halves together and disconnecting capacitor slip terminal.

12-44. REMOVAL. When removal of the complete magneto is desired, remove the spark plug leads at the back of the magneto and tag for identification, disconnect the capacitor lead, and remove the nuts securing the magneto to the engine. For replacement of the breaker assembly or where removal of only the forward (engine) half of the magneto is desired, remove the screws fastening the halves together, pull the rear half aft only enough to disconnect the capacitor slip terminal, and remove the nuts securing the magneto to the engine. As the halves are separated, be sure that the large distributor gear is not dropped.

CAUTION

When removing the distributor block housing from the forward case, do not pull it away far enough to break or damage the capacitor lead or slip terminal.

12-45. INTERNAL TIMING.

a. Whenever the nylon gear on the rotor shaft or the plastic cam (which also serves as the key for the gear) has been removed, be sure that the gear and cam are installed so the timing mark on the gear aligns with the "O" stamped on the rotor shaft.

b. When replacing breaker assembly or adjusting contact points, place a timing pin (or .093" 6-penny nail) through the timing hole in the bottom of the magneto next to the flange and into the mating hole in the rotor shaft. Adjust contact points so they just break in this position, with a maximum point opening of .012" to .015" when the timing pin is removed. Temporarily assemble the two magneto halves and capacitor slip terminal, and use a timing light to check that the timing marks visible through the ventilation plug holes are aligned at the instant the contact points break. Readjust the points if necessary.

NOTE

The side of the magneto with the manufacturer's insignia has a red timing mark and the side opposite the insignia has a black timing mark. The distributor gear also has a red timing mark and a black timing mark. The contact points should break when the two red lines are aligned at the insignia side of the magneto, or, when the two black lines are aligned at the opposite side of the magneto. Do not time with red and black lines together on the same side.

c. Whenever the large distributor gear and the rotor gear have been disengaged, they must be reengaged with their timing marks aligned for the correct rotation. Align the timing mark on the rotor gear with "RH" on the distributor gear for magnetos used on the Model 175 and with "LH" for those used on the Model 172. Care must be taken to keep these two gears meshed in these positions until the magneto halves are assembled.

NOTE

Rotation of the magnetos, "RH" for clockwise and "LH" for counterclockwise, is determined when the magneto is viewed from its drive (impulse coupling) end.

12-46. INSTALLATION AND TIMING TO THE ENGINE. To install and time the magneto to the engine, proceed as follows:

a. Turn the propeller in normal direction of rotation until No. 1 cylinder is in correct firing position on compression stroke.

NOTE

Various methods and equipment may be used to arrive at this firing position, which is listed for the different engines in paragraph 12-41. The Model 175 has a pointer with degrees marked on the end of the crankshaft. These are visible after removing the 5/8" brass plug in the cap covering the end of the crankshaft (just below propeller shaft housing). The Model 172 has degrees marked on the outer surface of the crankshaft flange, with the parting surface of the crankcase below the crankshaft as the reference point. In all cases, it must be definitely determined that No. 1 cylinder is at the correct firing position, on compression stroke, when the engine is turned in its normal direction of rotation.

b. Turn the magneto shaft until the timing marks visible through the ventilation plug holes are aligned (red-to-red or black-to-black) and insert a timing pin (or .093" 6-penny nail) through the timing hole in the bottom of the magneto next to the flange and into the mating hole in the rotor shaft. This locks the magneto approximately in firing position while installing on the engine.

c. After magneto gasket is in place, position the magneto on the engine and secure, then remove the timing pin from the magneto. Be sure to remove this pin before turning the propeller.

d. Connect a timing light to the capacitor terminal at the rear of the magneto and to a good ground.

e. Turn propeller back a few degrees to close the contact points.

NOTE

Do not turn the propeller back far enough to engage the impulse coupling or the propeller will have to be turned in normal direction of rotation until the impulse coupling releases, then backed up to slightly before the firing position.

f. Slowly advance the propeller in normal direction of rotation until timing light indicates the position of contact point breaking. The magneto mounting flange had elongated slots so that the magneto may be shifted to break the points at the correct engine firing position, as given in paragraph 12-41.

g. Tighten magneto mounting nuts, recheck timing, then remove timing light.

h. Connect spark plug leads to their correct magneto outlets.

NOTE

The No. 1 magneto outlet is the one closest to the ventilation plug on the side of the magneto having the manufacturer's insignia. The magneto fires at each successive outlet in direction of rotation. Connect No. 1 magneto outlet to No. 1 cylinder spark plug lead, No. 2 outlet to the next cylinder to fire, etc. Engine firing orders are given in figures 12-12 through 12-14.

i. Connect ignition switch primary lead to the capacitor terminal on the magneto.

12-47. MAINTENANCE. Magneto-to-engine timing should be checked with a timing light every 200 hours. If timing is off more than 1° in either direction, the magneto should be retimed to the engine. The magneto mounting flange has elongated slots for this purpose. If the internal timing marks visible through the ventilation plug holes on the sides of the magneto are misaligned more than 1/16" when the magneto fires, the magneto should be retimed internally. Whenever the magneto halves are separated, the breaker assembly should always be checked. As long as internal timing and magneto-to-engine timing are within the preceding tolerances, it is recommended that the magneto be checked internally only at 500-hour intervals.

NOTE

If ignition trouble should develop, spark plugs and ignition wiring should be checked first. If the trouble appears definitely to be associated with a magneto, the following may be used to help disclose the source of trouble without overhauling the magneto.

a. Moisture Check.

(1) Remove screws securing magneto halves together, disconnect capacitor slip terminal, remove distributor cap, and inspect for moisture.

(2) Check distributor gear finger and carbon brush for moisture.

(3) Check breaker assembly for moisture, especially on contact points.

(4) If any moisture is evident, lightly wipe with a soft, dry, clean, lint-free cloth.

b. Breaker Compartment Check.

(1) Check all parts of the breaker assembly for security.

(2) Check contact points for absence of excessive wear, burning, deep pits, and carbon deposits. Points may be cleaned with a hard-finish paper. Replace defective breaker assemblies. Make no attempt to stone or dress contact points. Clean new points with oleum spirits before installing.

(3) Check cam oiler pad. If dry, apply 2 or 3 drops of SAE 70 oil to the pad. Remove any excessive oil from breaker assembly; too much oil may result in fouling and excessive burning of points. The corner of the cam oiler pad should touch the cam lobe lightly.

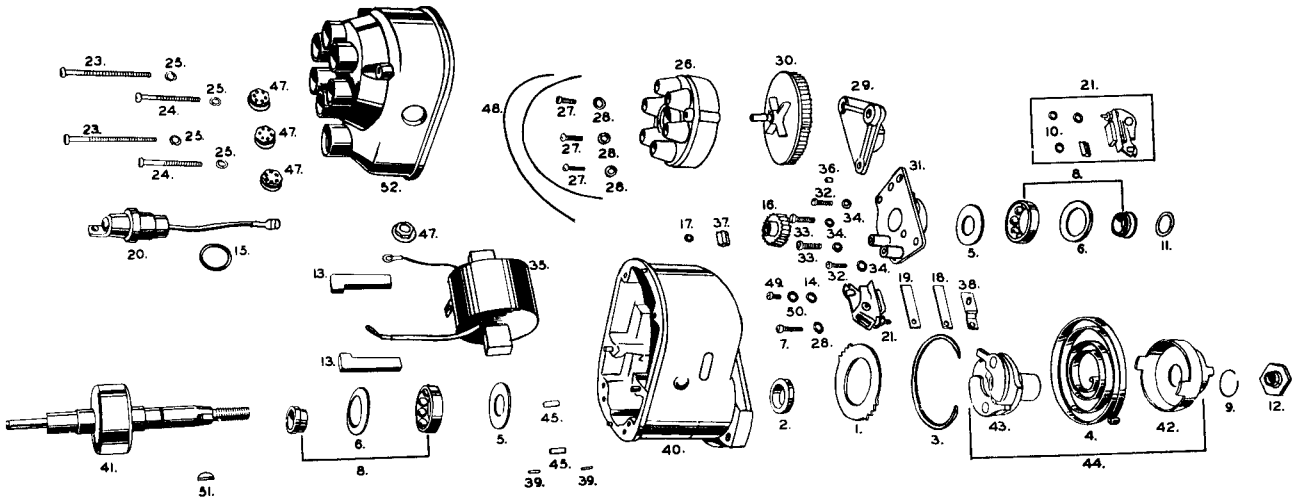

1. Plate - Stop pin
2. Oil Seal
3. Snap Ring - Stop pin plate
4. Spring - Impulse coupling
5. Washer - Rotor shaft bearing
6. Washer - Expanding Rotor shaft bearing
7. Screw - Breaker bar support
8. Ball Bearing - Rotor shaft
9. Snap Ring - Impulse coupling hub
10. Nut - Breaker Arm
11. Shim - (.005") Rotor shaft, end play
12. Nut - Impulse coupling
13. Wedge - Coil
14. Washer - Breaker bar
15. O-Ring - Sealing, condenser
16. Gear - Rotor shaft
17. Snap Ring - Rotor shaft cam
18. Follower - Cam
19. Insulator
20. Condenser
21. Kit - Contact points
23. #10-24 x 2-1/2" Fillister head screw
24. #10-24 x 1-3/4" Fillister head screw
25. #1210 Lockwasher
26. Block - Distributor
27. #8-32 x 5/8" Fillister head screw
28. #8 Lockwasher
29. Plate - Bearing
30. Gear - Distributor
31. Plate - Rotor bearing
32. #8-32 x 9/16" Fillister head screw
33. #8-32 x 7/8" Fillister head screw
34. #8-Lockwasher
35. Coil
36. Brush - Distributor gear
37. Cam - Breaker
38. Oiler - Breaker cam
39. Dowel - Distributor housing
40. Frame
41. Rotor
42. Shell - Impulse coupling
43. Hub - Impulse coupling
44. Coupling - Impulse
45. Bushing - Frame dowel
47. Vent - Air distributor housing
48. Gasket - Distributor housing
49. #8-32 x 3/8" Fillister head screw
50. #8 Lockwasher
51. Woodruff Key - Impulse coupling hub
52. Housing - Distributor block

Figure 12-6. Typical Slick Magneto

(4) Check the capacitor.

(5) Check the carbon brush on the distributor gear for excessive wear. The brush must extend a minimum of 1/32" beyond the end of the gear shaft. The spring which the brush contacts should be bent out approximately 20° from vertical, since spring pressure on the brush holds the distributor gear shaft against the thrust bearing in the distributor cap.

(6) Oil the bearings at each end of the distributor gear shaft with a drop of SAE 20 oil. Wipe off excess.

(7) Make sure internal timing is correct and reassemble the magneto. If removed from the engine, install and time properly.

SHOP NOTES:

12-48. BENDIX-SCINTILLA MAGNETOS.

12-49. Bendix-Scintilla magnetos used on Cessna aircraft are all of the same basic type. Beginning in 1961, the familiar impulse couplings were replaced by a starting vibrator starting system on the Models 180, 182 and 185. Bendix-Scintilla magnetos contain a conventional two-pole rotating magnet (rotor) mounted in ball bearings. Engine-driven at one end, the rotor shaft operates breaker points at the other end. A gear on the rotor shaft drives a distributor gear which transfers high-tension current from the coil to the proper outlet in the distributor block. A breaker compartment is located at the end of the magneto. On all except the magnetos used with the starting vibrator system, a condenser is provided in the breaker compartment. A coaxial capacitor which serves as the condenser as well as a radio noise suppressor is provided on magnetos used with the starting vibrator system.

The starting vibrator system employs a combination ignition and starter switch, and a starting vibrator. The left magneto contains an extra set of contact points so positioned that the magneto cam operates them at a retarded position to obtain the proper timing for starting. A starter circuit switch is provided (on 1961 models only) to make the starter circuit inoperative for hand-cranking (see paragraph 12-16). When the ignition switch is turned to "START," the right magneto is inoperative and the starting vibrator is energized. On 1961 models only, the starter solenoid is also energized. A push-to-start ignition switch (1962 and on) energizes the starter solenoid only when the key is pushed in, eliminating the need for a starter circuit switch. While the starter is cranking the engine, high-tension current is supplied to the spark plugs in the following manner:

a. The vibrator rapidly interrupts the direct current supplied to it by the battery, and this interrupted current flows to both sets of contact points in the left magneto.

b. The interrupted current flows to ground through both sets of points until the main set opens, then it flows to ground through the retard set of points only.

c. When the retard set opens, the interrupted current flows through the magneto primary coil to ground, thus inducing secondary current with a series of high-voltage peaks (a "shower of sparks") which are distributed to the spark plugs at the correct time by the magneto regular distribution system. The condenser operates in parallel with both sets of points.

12-50. REMOVAL. When removal of the complete magneto is desired, remove the high-tension outlet plate, disconnect the primary lead, and remove the nuts securing the magneto to the engine. On magnetos used with a starting vibrator, also disconnect the lead to the retard connection. Condenser or breaker assemblies can be replaced by removing the breaker cover; however, for ease of replacement and internal timing, it is recommended that the magneto be removed. Never remove the screws fastening the two halves of the magneto together - to do so would disengage the distributor gears, causing loss of internal timing and necessitating complete removal and retiming. Note approximate angle at which the magneto is mounted on the engine.

12-51. INTERNAL TIMING OF S-20 SERIES MAGNETOS.

NOTE

The information given here is for adjusting contact points to break at the proper position. It is assumed that the magneto has not been disassembled, and that the distributor gear, rotor gear, and cam have been installed for correct meshing of gears and correct direction of rotation. Magneto overhaul, including separating the two major sections of the magneto, is not covered in this manual. Refer to applicable Bendix publications for disassembly and overhaul.

a. Fabricate a timing template as follows:
1. Cut a paper template from figure 12-9.
2. Cement paper template to a thin piece of metal for use as a support plate, then trim the plate to the shape of the paper template.
3. Drill the two mounting holes with a No. 18 drill.

b. Fabricate a timing pointer as shown in figure 12-9A.

c. Remove magneto from engine, remove breaker compartment cover, and remove timing inspection plug from top of magneto.

d. Attach timing template to breaker compartment as shown in figure 12-9B, using 8-32 screws 1/4 inch long.

e. Turn rotating magnet in its direction of rotation until the painted chamfered tooth on distributor gear is approximately in center of inspection window, then turn rotating magnet back until it locates in its magnetic neutral position.

NOTE

Impulse coupling pawls must be depressed to turn rotating magnet in its normal direction of rotation.

f. Remove cam screw, lockwasher, and washer, and use cam screw to install timing pointer so it indexes with 0° mark on template, while rotating magnet is still in its magnetic neutral position.

g. Turn rotating magnet in proper direction of rotation until pointer indexes with 10° mark ("E" gap). Using 11-851 timing light or equivalent, adjust the breaker contacts to open at this point.

CAUTION

The special breaker grounding spring used on early magnetos short-circuits the primary at all times when the ground terminal is not installed. To prevent this from interfering with the action of the timing light, an insulating strip of heavy paper should be placed between the breaker grounding spring and

Subject: NEW TYPE GROUNDING TERMINAL SPRINGS FOR LIGHT AIRCRAFT MAGNETOS.

Reason for Bulletin: To inform users of the availability and recommended installation of a new design grounding terminal spring. This new type spring does not have an automatic grounding feature, but provides a more positive switch connection. The magneto can be grounded only when the switch wire is connected, thereby eliminating the possibility of intermittent open or grounded magneto switch circuits heretofore caused by vibratory shifting of the present breaker grounding spring.

Equipment Affected: S4-20, -21, -25 Magnetos
S6-20, -21, -22, -23, -25 Magnetos

MAINTENANCE SPARE PARTS:
10-56536
10-52929
10-89101
10-52959V
10-52952V

COMPLIANCE:
At overhaul or earliest convenience.

DETAILED INSTRUCTIONS:
Remove present spring or springs from breaker and replace with new one as indicated in Table 1.

TABLE 1

Original Spring	New Spring
10-52536	10-102090
10-52929 }	
10-89101 }	10-102092

In magnetos incorporating breaker assemblies 10-52959V and 10-52952V, the grounding spring is an integral part of the breaker assembly. Replace with breaker assemblies 10-52959U and 1052952U respectively.

SPECIAL TOOLS REQUIRED:
None

PARTS REQUIRED PER ARTICLE:
See Table 1.

MAN HOURS REQUIRED:
Approximately 15 minutes

WEIGHT CHANGE:
None

WARNING

SINCE THIS MODIFICATION INVOLVES REMOVAL OF THE BREAKER GROUNDING SPRING, THE MAGNETO WILL NO LONGER BE AUTOMATICALLY GROUNDED WHEN THE SWITCH WIRE IS DISCONNECTED. THE USUAL PRECAUTIONS MUST BE OBSERVED.

Figure 12-7. Excerpt from Bendix Service Bulletin No. 404

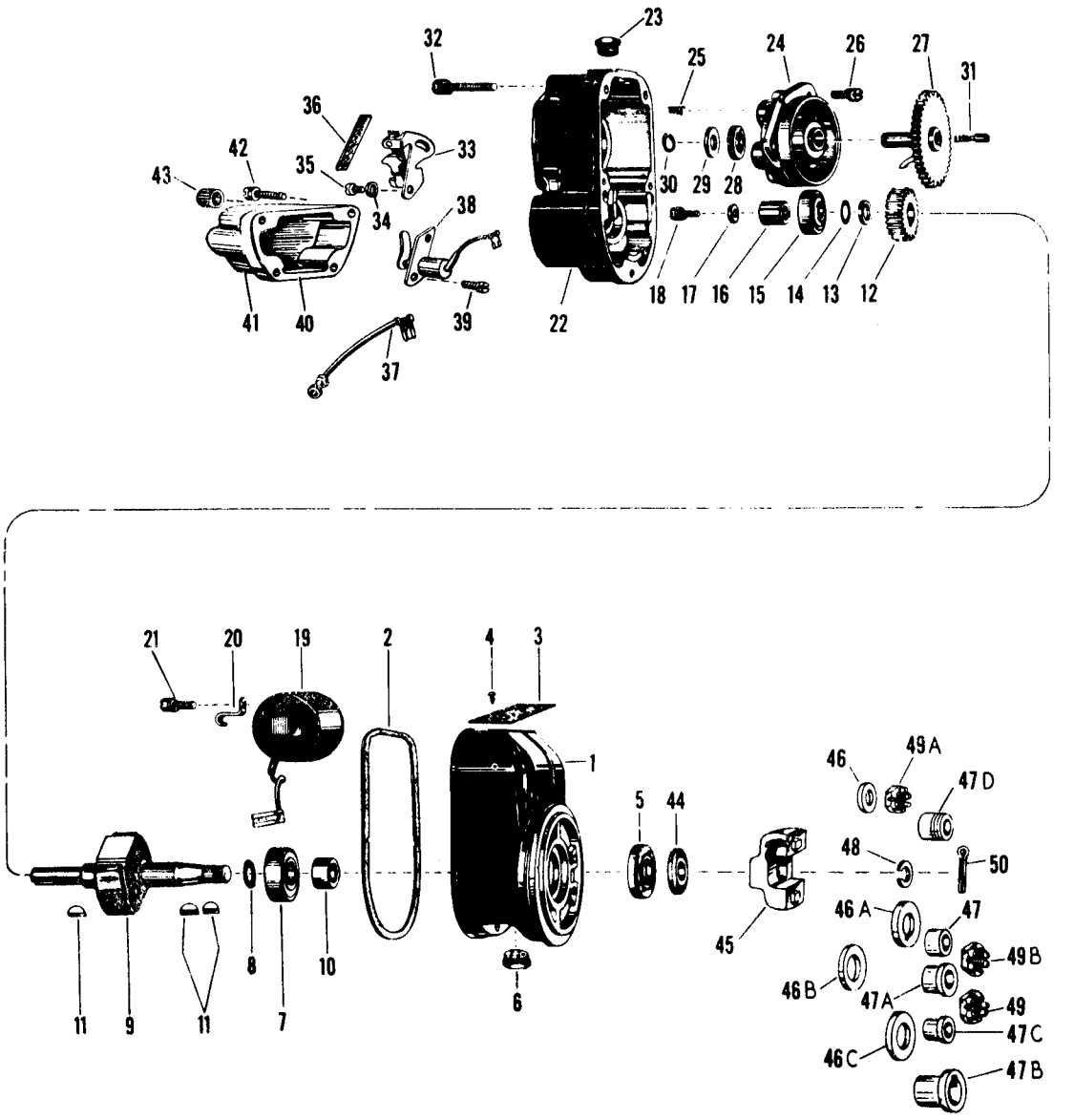

1. Magneto Housing
2. Gasket
3. Plate
4. Drive Screw
5. Oil Seal
6. Ventilator
7. Bearing
8. Shim
9. Rotating Magnet
10. Bearing
11. Key
12. Rotor Gear
13. Washer
14. Shim
15. Bearing
16. Cam
17. Washer
18. Screw and Lockwasher
19. Coil
20. Clamp
21. Screw and Lockwasher
22. Distributor Housing
23. Timing Plug
24. Distributor Block
25. Spring
26. Screw and Washer
27. Distributor Gear
28. Felt Washer
29. Washer
30. Retaining Ring
31. Carbon Brush
32. Screw and Washer
33. Breaker Assembly
34. Washer
35. Screw and Lockwasher
36. Insulation Sheet
37. Retard Lead
38. Capacitor
39. Screw and Lockwasher
40. Gasket
41. Breaker Cover
42. Screw and Lockwasher
43. Nut
44. Oil Deflector
45. Drive Plate
46. Washer
47. Bushing
48. Lockwasher
49. Nut
50. Cotterpin

Figure 12-8. Typical Bendix-Scintilla Magneto

the magneto housing. See also figure 12-7. Do not fail to remove the paper strip from the magneto after the timing is finished. If the paper strip were inadvertently left in the magneto, the effectiveness of the grounding spring would be lost. Later magnetos do not have this automatic grounding feature.

h. Turn rotating magnet until cam follower is on high part of cam lobe, and measure clearance between breaker contacts. Clearance must be .018 ± .006 inch. If clearance is not within these limits, readjust breaker contacts until they are within tolerance, then recheck the 10° ("E" gap) position. Tolerance on the "E" gap position is ± 4°. Replace breaker assembly if "E" gap and contact clearance will not both fall within the specified tolerances.

i. Remove timing pointer and timing template, and install cam screw, lockwasher, and washer. Torque to 16-20 lb in.

j. Install magneto and time to engine in accordance with paragraph 12-53.

12-52. INTERNAL TIMING OF S-200 SERIES MAGNETOS.

NOTE

The information given here is for adjusting contact points to break at the proper position. It is assumed that the magneto has not been disassembled, and that the distributor gear, rotor gear, and cam have been installed for correct meshing of gears and correct direction of rotation. Magneto overhaul, including separating the two major sections of the magneto, is not covered in this manual. Refer to applicable Bendix publications for disassembly and overhaul.

It is now recommended that the timing template and pointer be used when timing S-200 series magnetos, regardless of whether they have timing marks in the breaker compartment.

a. Fabricate a timing template as follows:

1. Cut a paper template from figure 12-9.
2. Cement paper template to a thin piece of metal for use as a support plate, then trim the plate to the shape of the paper template.
3. Drill the two mounting holes with a No. 18 drill.

b. Fabricate a timing pointer as shown in figure 12-9A.

c. Remove magneto from engine, remove breaker compartment cover far enough to disconnect capacitor and retard leads, and remove timing inspection plug from top of magneto.

d. Attach timing template to breaker compartment as shown in figure 12-9B, using 8-32 screws 1/4 inch long.

e. Turn rotating magnet in its normal direction of rotation until the painted chamfered tooth on distributor gear is approximately in center of inspection window, then turn rotating magnet back until it locates in its magnetic neutral position.

f. Remove cam screw, lockwasher, and washer, and use cam screw to install timing pointer so it indexes with 0° mark on template, while rotating magnet is still in its magnetic neutral position. Leave cam screw loose enough that the pointer may be moved.

g. Turn rotating magnet in proper direction of rotation until pointer indexes with 10° mark ("E" gap). Using 11-851 timing light or equivalent, adjust the main (left) breaker contacts to open at this point.

h. Turn rotating magnet until cam follower is on high part of cam lobe, and measure clearance between breaker contacts. Clearance must be .018 ± .006 inch. If clearance is not within these limits, readjust breaker contacts until they are within tolerance, then recheck the 10° ("E" gap) position. Tolerance on the "E" gap position is ± 4°. Replace breaker assembly if "E" gap and contact clearance will not both fall within the specified tolerances.

NOTE

The preceding steps outline internal timing for the right magneto. The left magneto contains an extra breaker assembly which operates at a retarded position. Use the following procedure to adjust the retard breaker.

i. After the main breaker is properly adjusted, turn rotating magnet to the exact point of main breaker opening. While holding this position of the rotating magnet, shift the pointer to the 0° position.

j. Turn rotating magnet in proper direction of rotation until pointer is at correct degree of retard and, using timing light, adjust retard (right) breaker contacts to open at the correct degree of retard.

NOTE

On some early magnetos, the correct degree of retard is 45°. On later magnetos, the correct degree of retard is 30°. The degree of retard for any particular magneto is stamped in the lower portion or left hand side of the breaker compartment. These are degrees of rotating magnet travel, not crankshaft travel.

k. Turn rotating magnet until cam follower is on high part of cam lobe, and measure clearance between breaker contacts. Clearance must be within .018 ± .006 inch. If clearance is not within these limits, readjust retard breaker contacts until they are within tolerance, then recheck the retard position. Tolerance on the retard position is +2° -0°. Replace retard breaker assembly if retard position and contact clearance will not both fall within the specified tolerances.

l. Remove timing pointer and timing template, and install cam screw, lockwasher, and washer. Torque to 16-20 lb in.

m. Install magneto and time to engine in accordance with paragraph 12-53.

12-53. INSTALLATION AND TIMING TO THE ENGINE. To install and time the magneto to the engine, proceed as follows:

a. Turn the propeller in normal direction of rotation until No. 1 cylinder is in correct firing position on compression stroke.

NOTE

Various methods and equipment may be used to arrive at this firing position, which is listed for the different engines in paragraph 12-41. The Models 150 and 172 have degrees marked on the outer surface of the crankshaft flange, with the parting surface of the crankshaft below the crankshaft as the reference point. Later Models 180, 182, and 185 have the degrees marked on a bracket attached to the starter adapter, with a timing mark on the generator drive pulley as the reference point. In all cases, it must be definitely determined that No. 1 cylinder is at the correct firing position, on compression stroke, when the engine is turned in its normal direction of rotation.

b. Turn magneto backwards until painted chamfered tooth is approximately in center of timing window. Be sure magneto gasket is in place, then install magneto approximately at the angle noted during removal. Tighten mounting clamps enough to hold magneto in place, but loose enough to permit magneto to be rotated in its clamps.

c. Using a timing light connected across the main breaker contacts, rotate magneto case in normal direction of cam rotation until contacts have just closed, then rotate in the opposite direction until timing light indicates position at which contacts break. Secure magneto.

d. Turn propeller back a few degrees (approximately 5°) to close contacts.

NOTE

Do not turn propeller back far enough to engage impulse coupling (not used on S-200 series), or propeller will have to be turned in normal direction of rotation until impulse coupling releases, then again backed up to a few degrees before the firing position.

e. Slowly advance propeller (tap forward with minute movements as firing position is approached) in normal direction of rotation until timing light indicates position at which contacts break. The contacts should break at the advance firing position of No. 1 cylinder. Rotate magneto case to make contacts break at correct position.

CAUTION

Do not adjust contacts to compensate for incorrect magneto-to-engine timing. Breaker contact adjustment is for internal timing only, and any readjustment after internal timing has been accomplished will result in a weaker spark, with reduced engine performance.

f. After tightening magneto mounting clamps and rechecking magneto-to-engine timing, remove timing equipment. Install and connect any spark plugs that were removed.

g. Install timing inspection plug, breaker compartment cover, any noise filters that were removed, and magneto switch primary lead. Connect retard lead and capacitor on retard magnetos.

h. Install high-tension outlet plate.

NOTE

The No. 1 magneto outlet is identified with the No. "1." The magneto fires at each successive outlet in direction of rotation. No. 1 magneto outlet routes to No. 1 cylinder, No. 2 magneto outlet to the next cylinder to fire, etc. Ignition schematics are shown in figures 12-9 thru 12-12.

12-54. MAINTENANCE (BENDIX). At first 25-hour inspection and at each 100-hour inspection thereafter, breaker compartment should be inspected. Magneto-to-engine timing should be checked at each 100-hour inspection. If timing is correct within plus 0° and minus 2°, internal timing need not be checked. If timing is out of tolerance, remove magneto and set internal timing, then reinstall and time to the engine.

NOTE

If ignition trouble should develop, spark plugs and ignition wiring should be checked first. If the trouble appears definitely to be associated with a magneto, the following may be used to help disclose the source of trouble without overhauling the magneto.

a. Moisture Check.

1. Remove the high-tension outlet plate, cables, and grommet, and inspect for moisture.

2. Inspect distributor block high-tension outlet side for moisture.

3. If any moisture is evident, lightly wipe with a soft, dry, clean, lint-free cloth.

CAUTION

Do not use gasoline or other solvents, as these will remove the wax coating on some parts and could cause electrical leakage.

b. Breaker Compartment Check.

1. Remove breaker cover. On S-200 series, disconnect capacitor lead and retard lead as cover is removed.

2. Check all parts of the breaker assembly for security.

3. Check breaker contacts for excessive wear, burning, deep pits, and carbon deposits. Contacts may be cleaned with a hard-finish paper. Replace defective breaker assemblies. Make no attempt to stone or dress contacts. Clean new contacts with clear, unleaded gasoline before installing.

4. Check cam follower oiling felt. If it appears dry, re-oil with 2 or 3 drops of lubricant (Scintilla 10-86527, or equivalent). Allow about 30 minutes

for the felt to absorb the oil, then blot off excess with a clean cloth. Too much oil may result in fouling and excessive burning of contacts.

5. Check that the condenser or capacitor mounting bracket is not cracked or loose. If equipment is available, check condenser for a minimum capacitance of .30 microfarads. If equipment for testing is not available and a defective condenser is suspected, replace with a new one.

6. On magnetos with automatic grounding springs, check that the grounding spring cannot short circuit when the primary lead is installed. Bend the spring if necessary to prevent this condition.

7. Form leads in the breaker compartment of S-200 series magnetos as shown in figure 12-10.

c. If the trouble has not been corrected after accomplishing steps "a" and "b," check magneto-to-engine timing. If timing is not within prescribed tolerance, remove magneto and set internal timing, then reinstall and time to the engine.

d. If the trouble has still not been corrected, magneto overhaul or replacement is indicated.

SHOP NOTES:

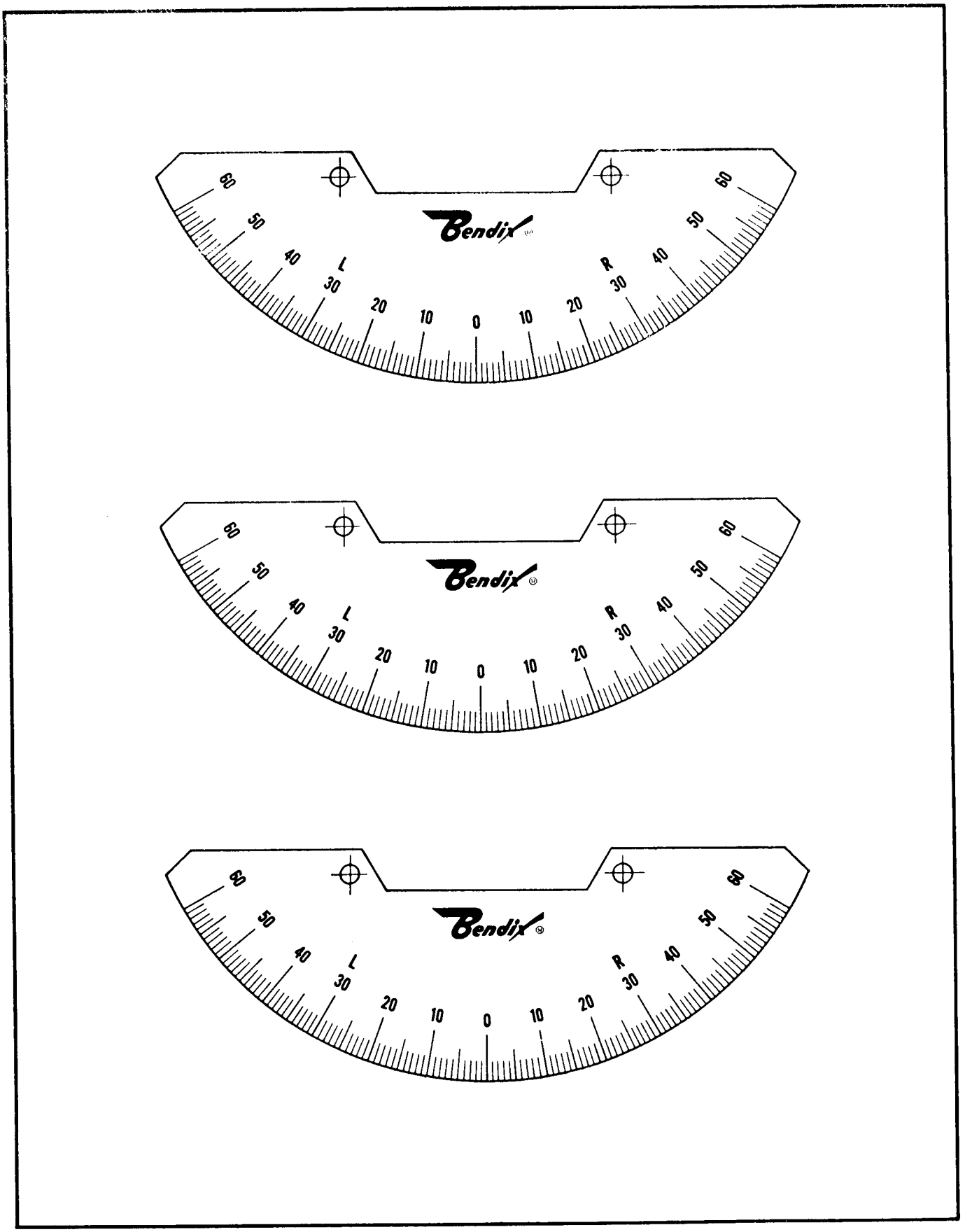

Figure 12-9. Magneto Timing Templates

This page intentionally left blank.

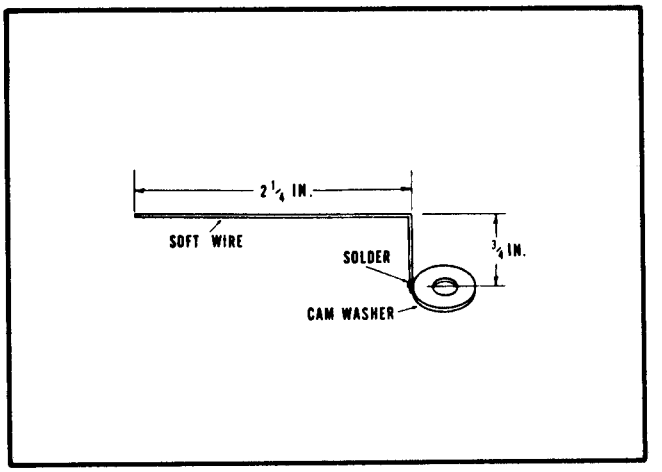

Figure 12-9A. Timing Pointer

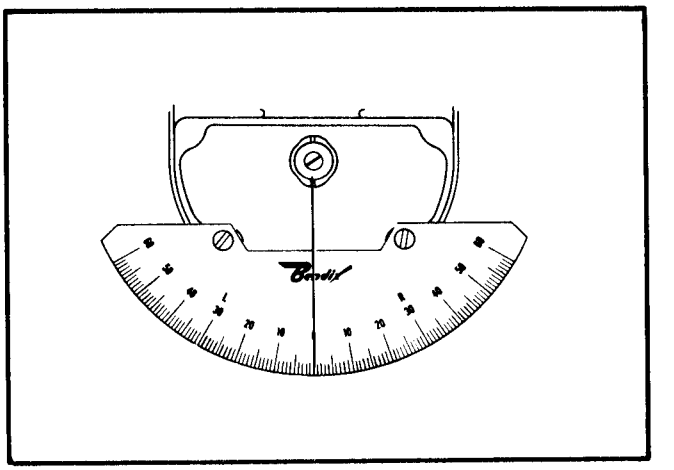

Figure 12-9B. Template and Pointer Attached to Breaker Compartment

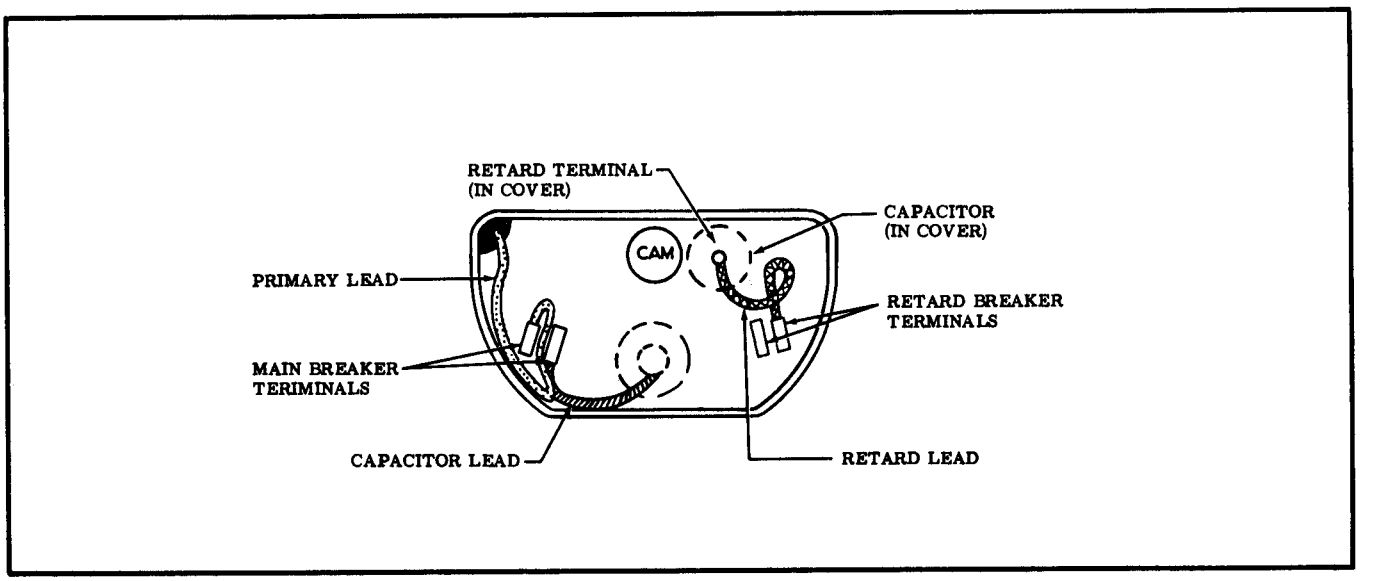

Figure 12-10. Forming Leads in Breaker Compartment of S-200 Magnetos

NOTE

Figure 12-11 has been deleted because of an improved method of internal timing for Bendix magnetos, which is now incorporated in this manual.

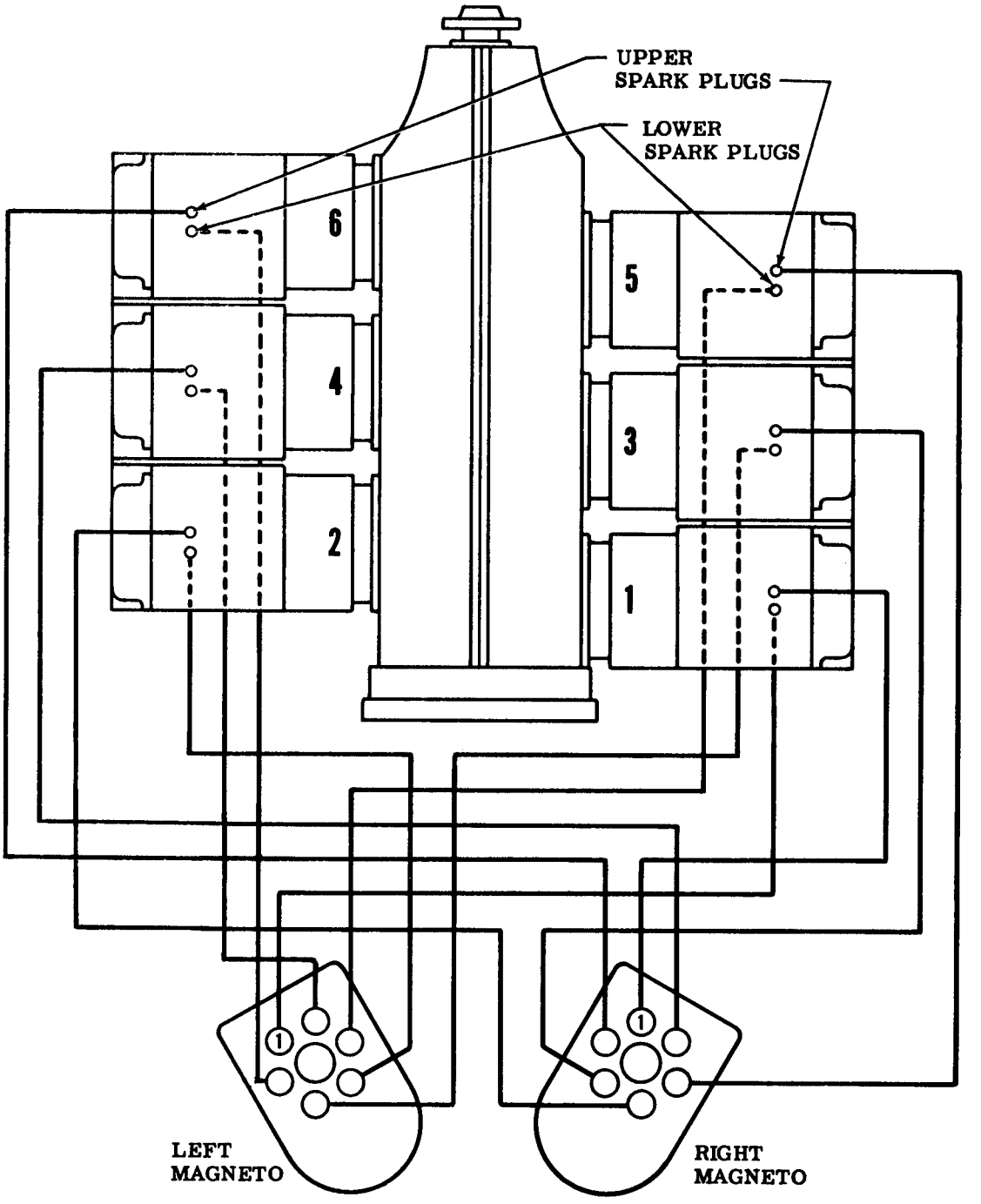

FIRING ORDER 1-4-5 2-3-6

Figure 12-12. Model 175 Ignition Schematic

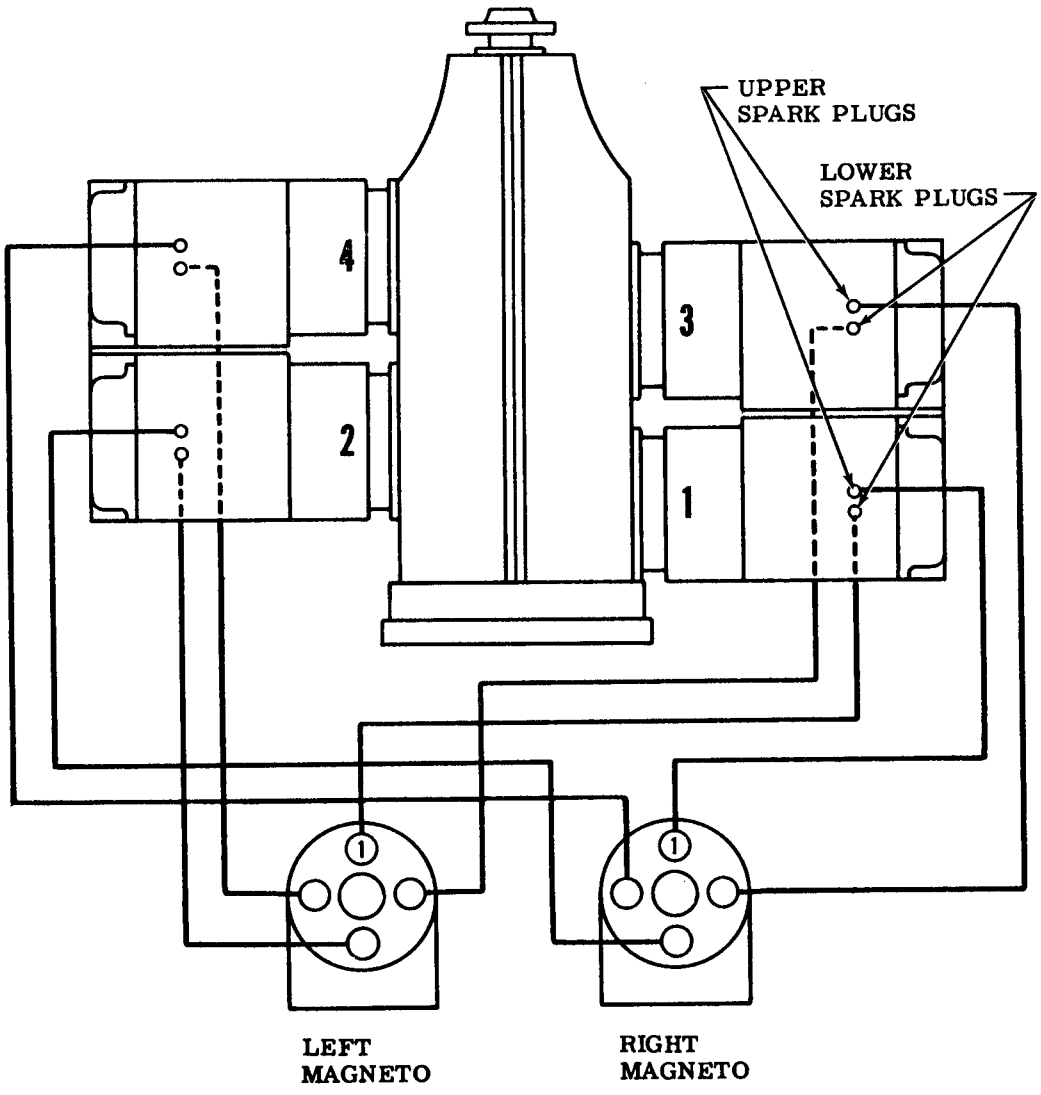

FIRING ORDER 1-3 2-4

Figure 12-13. Model 150 Ignition Schematic

NOTE

Models 180, 182 and 185 shown. Model 172 is the same except that the right magneto fires all upper spark plugs and the left magneto fires all lower ones.

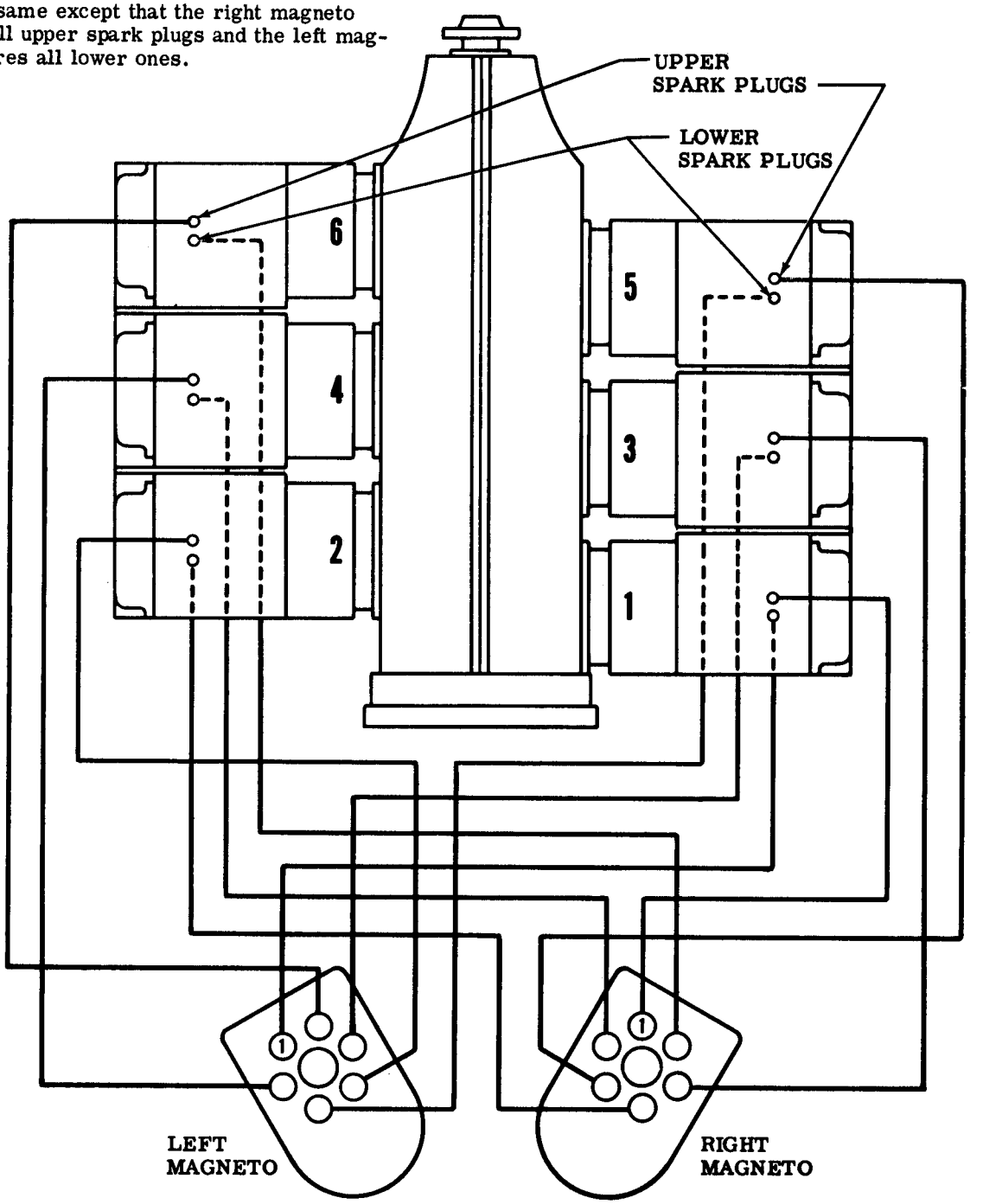

FIRING ORDER 1-6-3 2-5-4

Figure 12-14. Model 172, 180, 182 and 185 Ignition Schematic

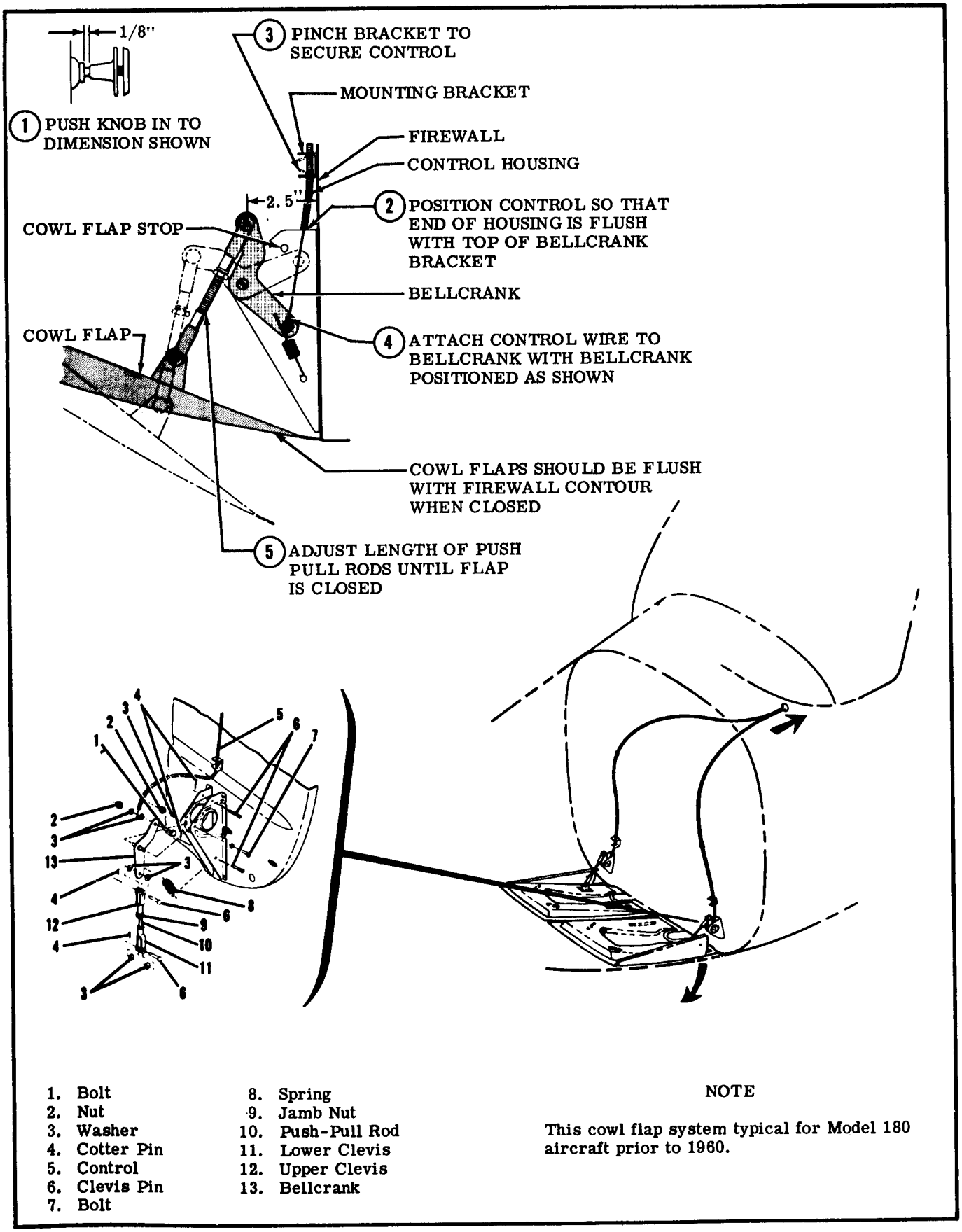

1. Bolt
2. Nut
3. Washer
4. Cotter Pin
5. Control
6. Clevis Pin
7. Bolt
8. Spring
9. Jamb Nut
10. Push-Pull Rod
11. Lower Clevis
12. Upper Clevis
13. Bellcrank

NOTE

This cowl flap system typical for Model 180 aircraft prior to 1960.

Figure 12-15. Cowl Flaps (Sheet 1)

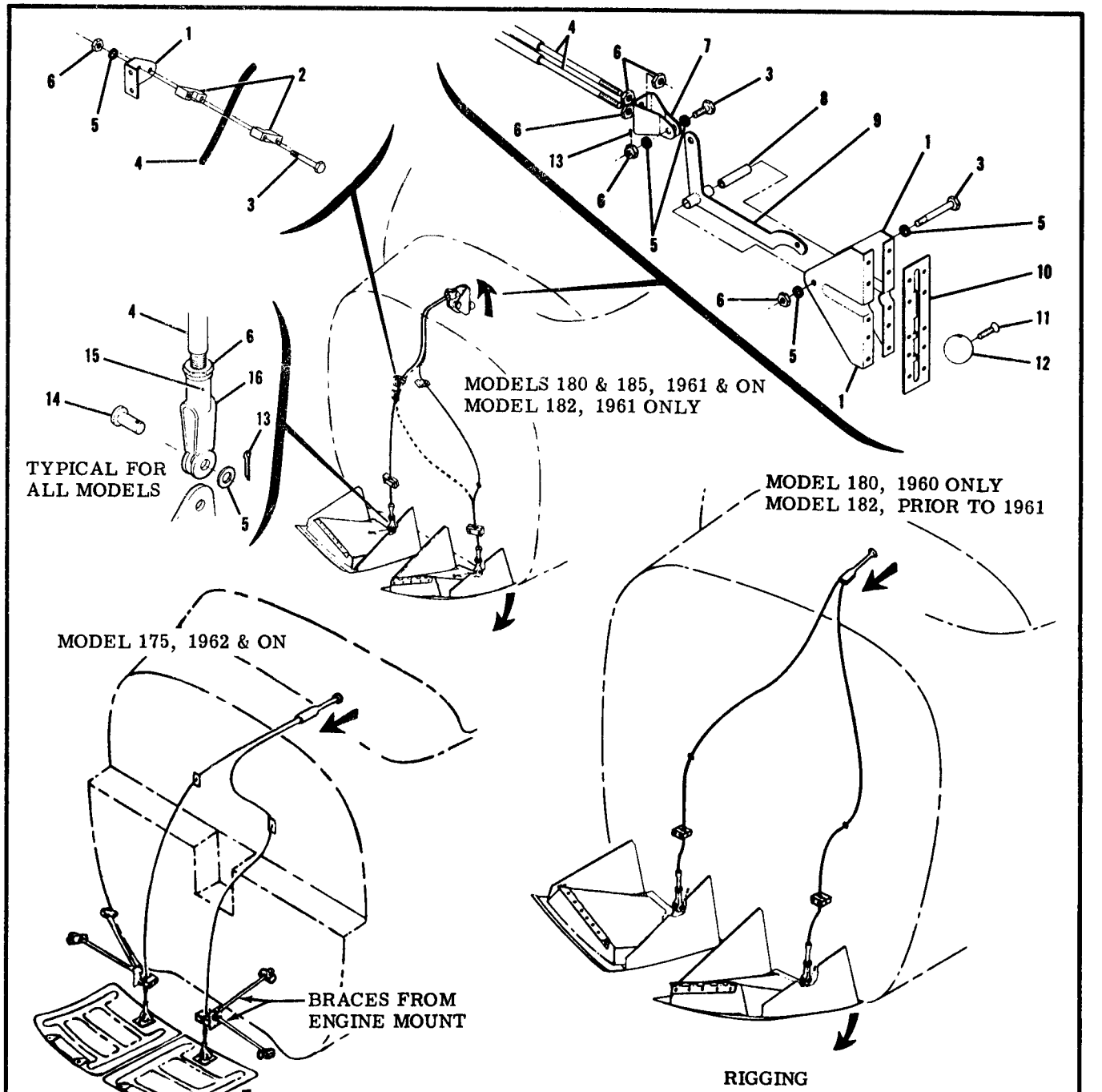

RIGGING

1. Set control shown at lower right with 1/8" cushion at instrument panel. Set control shown at lower left in full closed position. Set control shown at top in full open position.

2. Screw clevises onto controls so that control is visible through inspection hole (15).

3. Position controls in clamps so cowl flaps are open 16°(+2°-1°), except on the Model 175. On the Model 175, position controls in clamps so cowl flaps are open 2"(+.00"-.25"), measured at the outboard corners, when control is in full closed position.

1. Bracket
2. Clamp
3. Bolt
4. Control
5. Washer
6. Nut
7. Control Clevis
8. Spacer
9. Lever
10. Plate
11. Screw
12. Knob
13. Cotter Pin
14. Clevis Pin
15. Inspection Hole
16. Rod End Clevis

Figure 12-15. Cowl Flaps (Sheet 2)

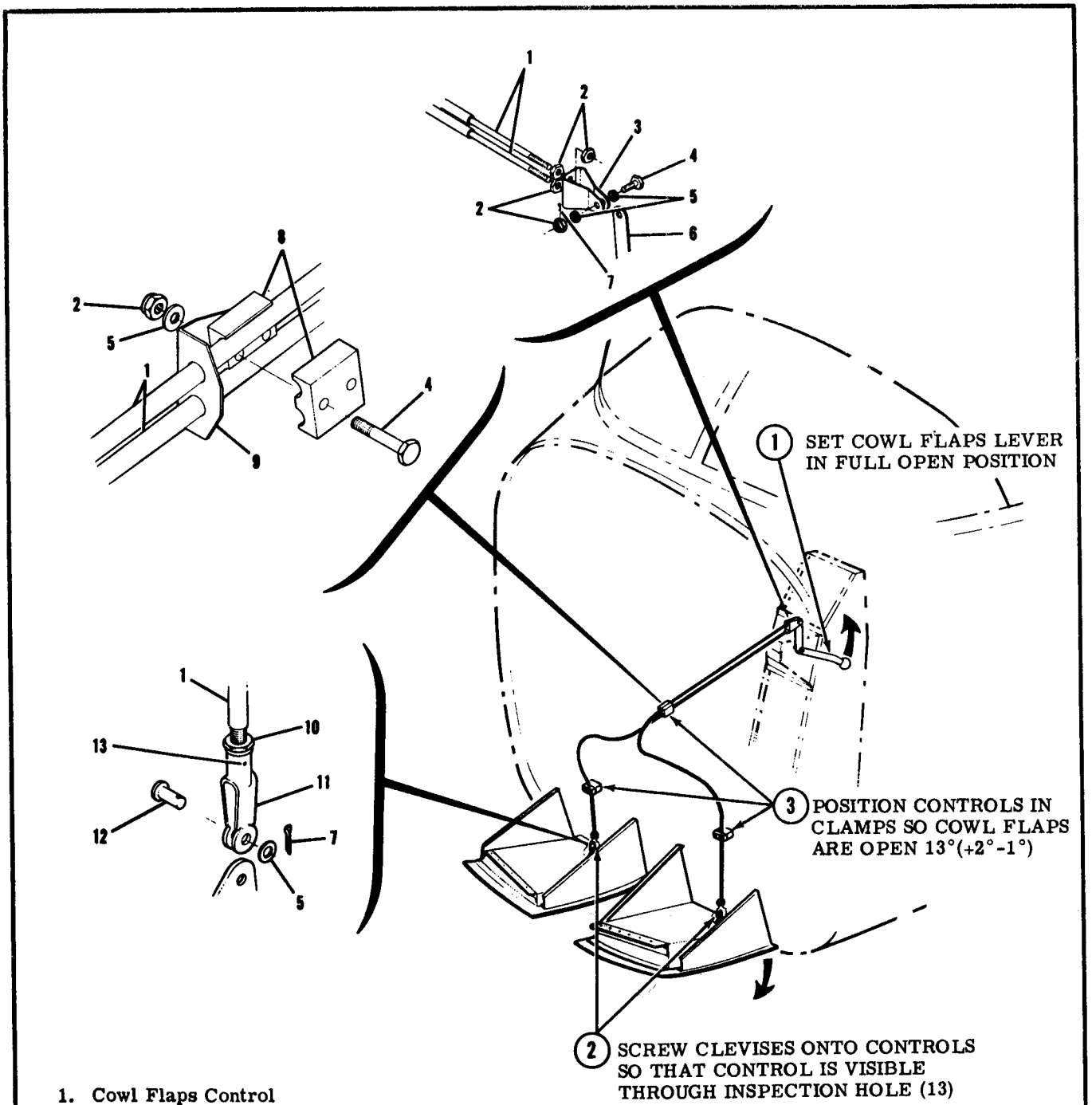

1. Cowl Flaps Control
2. Nut
3. Control Clevis
4. Bolt
5. Washer
6. Lever
7. Cotter Pin
8. Clamp
9. Bracket
10. Check Nut
11. Rod End Clevis
12. Clevis Pin
13. Inspection Hole

NOTE

This cowl flap system typical for Model 182, 1962 and on.

Figure 12-15. Cowl Flaps (Sheet 3)

12-55. ENGINE COWLING.

12-56. The engine cowling streamlines, encloses, and aids in cooling the engine. Cowl sections are joined together and secured to the airplane by screws and bolts, and by quick-release fasteners on most models. Hinged doors afford access for servicing. Adjustable cowl flaps are provided on all Model 180 and 185 aircraft, the Model 182 (1959 and on), and the Model 175 (1962 and on). The Model 175 cowling differs in its unique, shock-mounted attachment. On the other models, the cowling is secured directly to the fuselage.

12-57. REMOVAL AND REPLACEMENT of the cowling is accomplished by removing attaching screws and bolts, and releasing quick-release fasteners. On models with cowl flaps, it is necessary to lower the cowl flaps and disconnect each one from its control or linkage. Various changes have been made in design of air inlets, air filters, ducting, and flexible connections. Disconnect any of these which interferes with removal of the cowling. When replacing the cowling, be sure to connect any items disconnected during removal. If cowl flap adjustment was disturbed, rig per figure 12-15.

12-58. CLEANING. Wipe the inner surfaces of the cowl with a cloth saturated with cleaning solvent. If the inside of the cowl is coated heavily with grease and dirt, allow the solvent to soak until the foreign material can be removed. Painted surfaces should be cleaned by washing with water and a mild soap. Waxing after cleaning is recommended to prolong paint life.

12-59. REPAIR of cowling may involve replacement of defective latches, hinges, access doors, fasteners, ducts or even entire cowl sections. Small cracks resulting from vibration should be stop-drilled and reinforced with a doubler installed on the inner surface of the cowl skin.

12-60. BAFFLES.

12-61. Engine baffles are constructed of metal and strips of asbestos fabric. They are designed to direct ram air around the cylinders and engine components in a manner that will provide optimum cooling of the engine.

12-62. REMOVAL AND REPLACEMENT of the various baffle segments is possible with the cowling removed. Be sure that any replaced baffles seal properly.

12-63. REPAIR of an individual segment of engine baffle is generally impractical, since, due to the small size and formed shape of the part, replacement is generally more economical. Small cracks in a baffle may be stop-drilled and reinforced with a plate patch. The sealing strips around the outer edges of baffles are essential to engine cooling and should be replaced if they do not seal properly between the baffle and the cowling.

12-64. ENGINE MOUNT (TUBULAR).

12-65. The engine mount is composed of sections of tubing welded together and reinforced with welded gussets. The purpose of the mount is to support the engine and attach it to the airframe. The engine is attached to the engine mount with shock-mount assemblies which absorb engine vibrations. On some models, the engine mount is also shock-mounted to the fuselage.

NOTE

On the Model 150, the engine mount supports the nosewheel shock strut. Included in the Model 175 engine mount-to-fuselage attachments are shock mounts which support the free floating engine cowling.

12-66. REPLACEMENT of the engine mount necessitates removal of the engine, followed by removal of the bolts attaching the mount to the fuselage.

NOTE

When tightening engine mount bolts, two different procedures should be used. If the bolt secures metal parts together or tightens against a metal spacer, the standard torque values listed in Section 1 should be used. If the bolt compresses rubber pads with no metal spacer in between, tighten until the rubber pads bulge out slightly, but do not tighten enough to cause damage to the rubber.

12-67. REPAIR of the engine mount should be performed carefully as suggested in paragraphs 19-54 through 19-57. The mount should be painted with heat-resistant black enamel after welding or whenever the original finish has been removed.

SHOP NOTES:

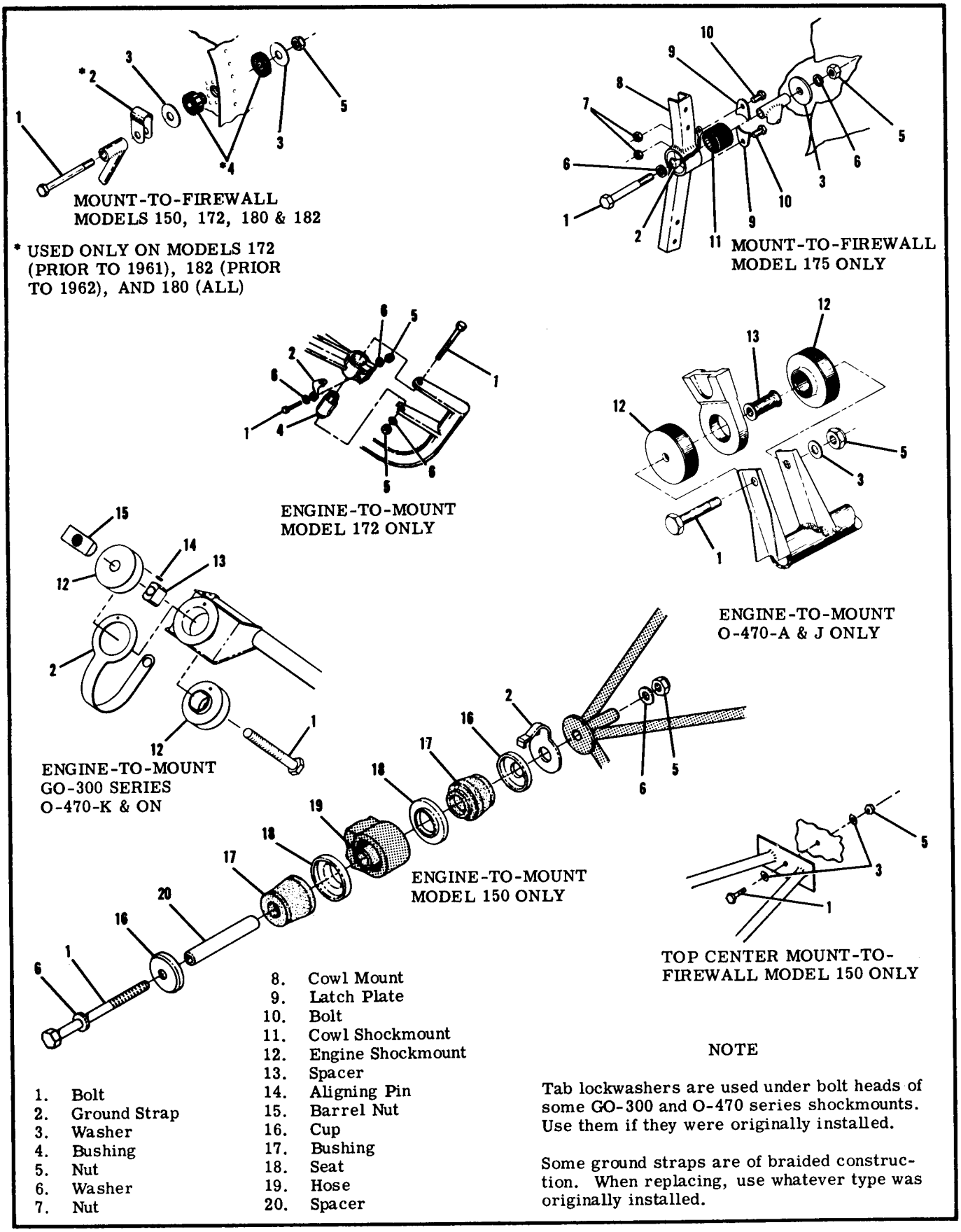

1. Bolt
2. Ground Strap
3. Washer
4. Bushing
5. Nut
6. Washer
7. Nut
8. Cowl Mount
9. Latch Plate
10. Bolt
11. Cowl Shockmount
12. Engine Shockmount
13. Spacer
14. Aligning Pin
15. Barrel Nut
16. Cup
17. Bushing
18. Seat
19. Hose
20. Spacer

NOTE

Tab lockwashers are used under bolt heads of some GO-300 and O-470 series shockmounts. Use them if they were originally installed.

Some ground straps are of braided construction. When replacing, use whatever type was originally installed.

Figure 12-16. Engine Mount Details

12-68. OIL SYSTEM.

12-69. Wet sump, pressure-lubricating oil systems are employed in the engines of all the aircraft covered by this manual. In these engines, oil under pressure from the oil pump is fed through drilled crankcase passages which supply oil to the crankshaft main bearings and camshaft bearings. Connecting rod bearings are pressure lubricated through internal passages in the crankshaft. Valve mechanisms are lubricated through the hollow push-rods, which are supplied with oil from the crankcase oil passages. Oil is returned by gravity to the engine oil sump. Cylinder walls and piston pins are spray-lubricated by oil escaping from connecting rod bearings. Engines for the Models 175, 180, and 182 are equipped with an oil cooler and conventional vernatherm-controlled oil temperature regulation. A pressure relief valve is installed to maintain proper oil pressure at higher engine speeds. Removable oil filter screens are provided within oil systems. External, replaceable oil filters are optional equipment on most models.

12-70. TROUBLE SHOOTING.

PROBABLE CAUSE	ISOLATION PROCEDURE	REMEDY
NO OIL PRESSURE.		
No oil in sump.	Check with dipstick.	Fill sump with proper grade and amount of oil.
Oil pressure line broken, disconnected, or pinched.	Inspect oil pressure line.	Replace or connect.
Oil pump defective.	Remove and inspect.	Examine engine. Metal particles from damaged pump may have entered engine oil passages.
Defective oil pressure gage.	Check with another gage. If second reading is normal, airplane gage is defective.	Replace gage.
Oil congealed in gage line.	Disconnect line at engine and gage; flush with kerosene.	Pre-fill with kerosene and install.
Relief valve defective.	Remove and check for dirty or defective parts.	Clean and reinstall; replace if defective.
LOW OIL PRESSURE.		
Low viscosity oil.		Drain oil and refill sump with proper grade of oil.
Low oil level.	Check with dipstick.	Fill sump to proper level with proper grade of oil.
Oil pressure relief valve spring weak or broken.	Remove and check spring.	Replace weak or broken spring.
Defective oil pump.	Check oil temperature and oil level. If temperature is higher than normal and oil level is correct, internal failure is evident.	Examine engine. Metal particles from damaged oil pump may have entered engine oil passages.
Secondary result of high oil temperature.	Observe oil temperature gage for high indication.	Determine and correct reason for high oil temperature.
HIGH OIL PRESSURE.		
High viscosity oil.		Drain oil and refill sump with proper grade and amount of oil.

PROBABLE CAUSE	ISOLATION PROCEDURE	REMEDY
HIGH OIL PRESSURE (Cont).		
Relief valve defective.	Remove and check for dirty or defective parts.	Clean and reinstall; replace if defective.
Defective oil pressure gage.	Check oil pressure with another gage. If second gage gives a normal reading, airplane gage is defective.	Replace oil pressure gage.
HIGH OIL TEMPERATURE.		
Oil cooler thermo bypass valve defective.	Feel front of cooler core with hand. If core is cold, oil is bypassing cooler.	Replace thermo bypass valve.
Oil cooler air passages clogged.	Inspect cooler core.	Clean air passages.
Oil cooler oil passages clogged.	Attempt to drain cooler. Inspect any drainings for sediment.	Clean oil passages.
Oil congealed in oil cooler.	This condition can only occur in extremely cold temperatures.	If congealing is suspected, use external heater or a heated hangar to thaw the congealed oil.
Secondary effect of low oil pressure.	Observe oil pressure gage for low indication.	Determine and correct reason for low oil pressure.
Defective oil temperature gage.	Check with another gage. If second reading is normal, airplane gage is defective.	Replace gage.
Defective oil temperature bulb.	Check for correct oil pressure, oil level and cylinder head temperature. If they are correct, check oil temperature gage for being defective; if a similar reading is observed, bulb is defective.	Replace temperature bulb.
LOW OIL TEMPERATURE.		
Defective oil temperature bulb or gage.	Check with another gage. If reading is normal, airplane gage is defective. If reading is similar, temperature bulb is defective,	Replace defective part.
Oil cooler thermo bypass valve defective or stuck closed.	Remove valve and check for proper operation.	Replace thermo bypass valve.

SHOP NOTES:

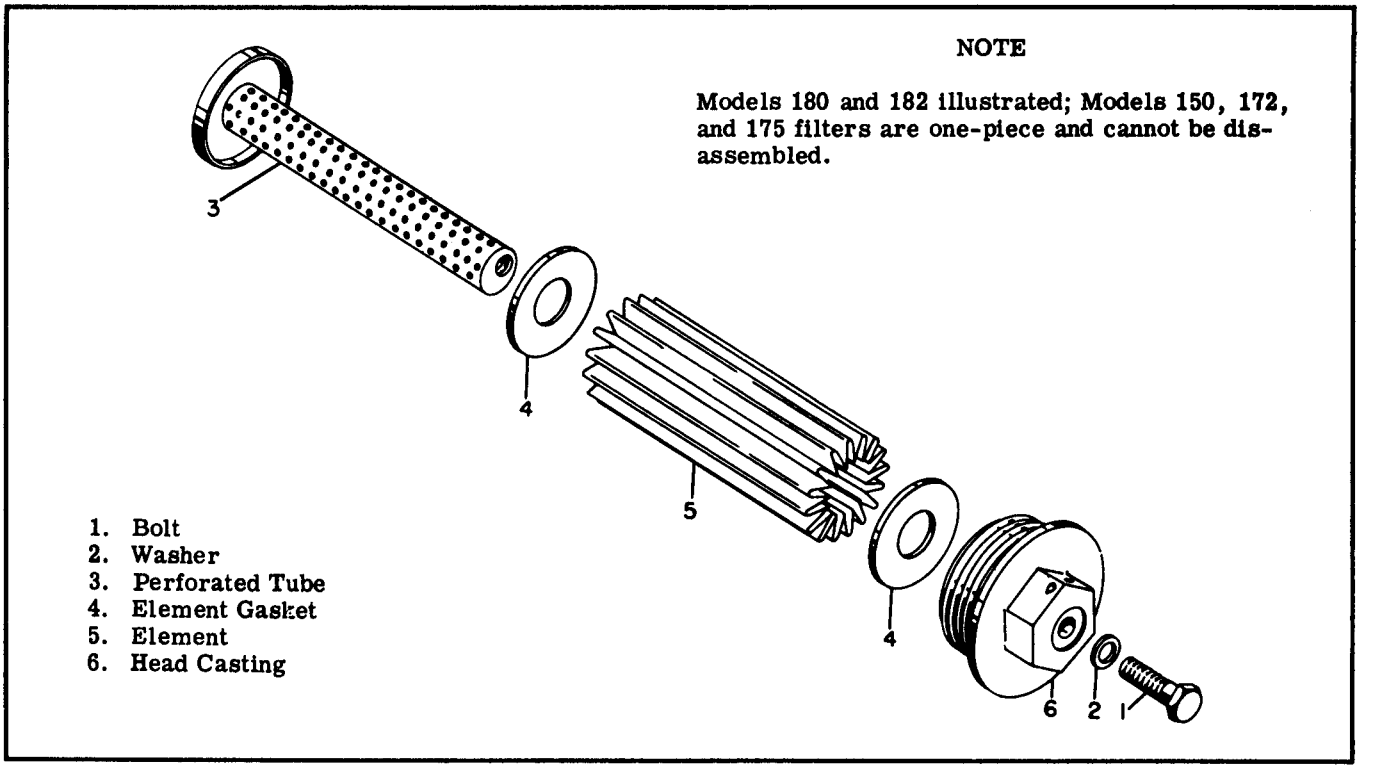

Figure 12-17. Oil Filter

12-71. EXHAUST SYSTEM.

12-72. Exhaust system configurations used on Cessna single-engine aircraft vary with each model; however, all are similar in principle of operation. Exhaust gas heat exchangers, shrouds, ducting, valves, and controls furnish heated air to the carburetor or cabin, or both.

12-73. REMOVAL AND REPLACEMENT of exhaust systems may be accomplished as follows:

a. Remove engine cowling.
b. Disconnect ducting from heater shrouds.
c. Disconnect exhaust stack braces.
d. Remove nuts securing the exhaust stack assembly to the cylinders.

NOTE

Usually the assembly can be removed intact. However, on some models the clamps joining sections of the exhaust stacks must be removed and the assembly removed in sections because of engine mount or engine component interference.

e. Heater shrouds may be removed as desired.
f. Reverse the above procedure to install the exhaust system. Use new exhaust gaskets regardless of apparent condition of those removed.

12-74. INSPECTION of the exhaust system should be thorough because the cabin heating system uses air heated by the heat exchangers of the exhaust system. Since exhaust systems of this type are subject to burning, cracking, and general deterioration from alternate thermal stresses and vibration (comparable to those affecting automotive mufflers), inspection is important and should be accomplished every 100 hours of operation. In addition, an inspection should be performed any time exhaust fumes are detected in the cabin.

a. Remove engine cowling, and loosen or remove heater shrouds so that ALL surfaces of the exhaust stack assembly can be visually inspected. Especially check the areas adjacent to welds. Look for exhaust deposits in surrounding areas, indicating that exhaust gas is escaping through a crack or hole.
b. Where part of the exhaust stack assembly is not accessible for a thorough visual inspection, or is hidden by parts of non-removable shrouds, the following method is recommended.
1. Remove the exhaust stack assembly and heater shrouds in accordance with paragraph 12-73.
2. Use rubber expansion plugs to seal openings.
3. Using a manometer or gage, apply approximately 1 1/2 psi (3 inches of mercury) air pressure while the stack assembly is submerged in water. Any leaks will appear as bubbles and can be readily detected.
4. It is recommended that any exhaust stacks found defective be replaced before the next flight.
5. If no defects are found, remove plugs and dry thoroughly with compressed air.
c. Install the exhaust system by reversing the procedure of paragraph 12-73.

SECTION 12A

MODEL 185 POWERPLANT

(SEE SECTION 12 FOR POWERPLANTS OF OTHER MODELS)

TABLE OF CONTENTS

	Page
DESCRIPTION	12A-1
Engine Data	12A-2
TROUBLE SHOOTING	12A-3
ENGINE REMOVAL	12A-5
Pivoting Engine from Firewall	12A-5
Cleaning	12A-6
Removal of Accessories	12A-6
Disassembly and Overhaul	12A-6
Powerplant Build-Up	12A-6
ENGINE INSTALLATION	12A-6
EXTREME WEATHER MAINTENANCE	12A-6
Cold Weather	12A-6
Hot Weather	12A-6
Dusty Conditions	12A-6
Seacoast Areas, Humid Areas	12A-7
STARTING SYSTEM	12A-7
AIR INDUCTION SYSTEM	12A-7
Airbox Replacement	12A-7
FUEL INJECTION SYSTEM	12A-7
FUEL-AIR CONTROL UNIT	12A-7
Replacement	12A-7
Adjustments	12A-7
FUEL MANIFOLD VALVE	12A-8
Removal	12A-8
Cleaning	12A-9
Installation	12A-9
FUEL DISCHARGE NOZZLES	12A-9
Removal	12A-9
Cleaning	12A-9
Installation	12A-9
FUEL INJECTION PUMP	12A-9
Replacement	12A-10
Adjustments	12A-10
ENGINE CONTROLS	12A-10
RIGGING ENGINE CONTROLS	12A-11
Induction Hot Air	12A-11
Propeller Governor	12A-11
Throttle	12A-11
Mixture	12A-11
IGNITION	12A-11
ENGINE COWLING	12A-11
BAFFLES	12A-11
ENGINE MOUNT	12A-12
Replacement	12A-12
Repair	12A-12
OIL SYSTEM	12A-12
EXHAUST SYSTEM	12A-12

12A-1. DESCRIPTION.

12A-2. An air cooled, wet-sump, six cylinder opposed Continental IO-470-F engine, equipped with fuel injection, is used to power the Model 185. For engine specifications refer to paragraph 12A-3.

NOTE

For repair and overhaul of the engine, accessories, and propeller, refer to appropriate publications issued by the manufacturers of these items.

12A-3. ENGINE DATA.

AIRCRAFT SERIES	185
Continental Model	IO-470-F
BHP (Rated Maximum)	260 @ 2625
Number of Cylinders	6
Displacement (Cubic Inches) Bore Stroke	471 Cubic Inches 5.00 Inches 4.00 Inches
Compression Ratio	8.6:1
Magnetos Right Magneto Left Magneto	Left Magneto is a S6RN-201, Right Magneto is a S6RN-205. Fires 20° BTC-1-3-5 upper and 2-4-6 lower spark plugs Fires 20° BTC-2-4-6 upper and 1-3-5 lower spark plugs
Firing Order	1-6-3-2-5-4
Fuel Metering System	Continental Fuel Injection System which includes the Fuel Injection Pump.
Oil Sump Capacity	12 U.S. qts.
Tachometer Drive	Type AS-54 Mechanical Drive
Valve Mechanism	Hydraulic Lifters, Non-adjustable Tappets
Generator	12-Volt (50 Ampere)
Oil Pressure (psi) Normal Minimum Idling	 30 to 60 10
Oil Temperature Minimum for Takeoff Maximum	 75° F. 225° F.
Cylinder Head Temperature Maximum	 460° F.
Dry Weight with Accessories	464 lbs. (Weight is approximate and will vary with optional accessories installed.)
Starter (Delco-Remy)	12-Volt, Automatic engagement
Direction of Crankshaft Rotation (Viewed from Rear)	Clockwise

SHOP NOTES:

12A-4. TROUBLE SHOOTING.

PROBABLE CAUSE	ISOLATION PROCEDURE	REMEDY
ENGINE FAILS TO START.		
Improper use of starting procedure.		Review starting procedure.
Defective aircraft fuel system.		See paragraph 13-3A.
Engine flooded.	Check for strong odor of fuel if engine sputters but will not start.	Clear engine and restart in accordance with paragraph 12A-14.
Spark plugs fouled.	Remove several spark plugs and check visually.	Remove and clean all spark plugs. Replace if defective.
Failure of starting vibrator.	Turn starter circuit switch "OFF" (1961 only). Turn master switch "ON." Turn ignition switch to "START." Do NOT push in on 1962 and on. Buzzing sound denotes vibrator is operating.	Replace starting vibrator.
Defective magneto switch or grounded magneto leads.	Check continuity of switch and magneto leads.	Repair/replace switch or leads.
Excessive induction air leaks.	Check visually.	Correct the cause of leaks.
Dirty screen in fuel control unit.	Remove and check visually.	Clean and reinstall.
Defective electric fuel pumps.		See paragraph 13-3A.
Defective ignition system.		See paragraph 12-54.
Defective fuel manifold valve.	Loosen a fuel injection line at a nozzle. If fuel flow indicator registers fuel flow but no fuel flows from disconnected line, fuel manifold is defective.	Clean fuel manifold valve in accordance with paragraph 12A-27. Replace if defective.
Clogged fuel injection nozzles.		Remove and clean nozzles. Refer to paragraph 12A-31.
Defective by-pass valve in engine-driven fuel injection pump.	Disconnect inlet hose to fuel manifold valve. If electric pump causes fuel to flow to the engine-driven pump, but fuel will not flow to the fuel manifold valve, the engine-driven pump is defective.	Replace engine-driven fuel pump.
ENGINE STARTS BUT DIES.		
Restricted fuel flow.	Check for sufficient rate of flow, beginning at injection nozzles and at successive points until cause is found.	Determine cause of restricted flow and correct.
Propeller control in low rpm position.	Check visually.	Use high rpm for all ground operations.
Fuel vents plugged.		Correct per paragraph 13-10.

ENGINE STARTS BUT DIES. (Cont)		
Defective engine-driven fuel pump.	If engine continues to run with electric pumps on, but dies when they are turned off, the engine-driven pump is defective.	Replace defective engine-driven fuel pump.
Improper idle speed or idle mixture adjustment.		Adjust in accordance with paragraph 12A-24.
ENGINE WILL NOT IDLE PROPERLY.		
Improper idle speed or idle mixture adjustment.		Adjust in accordance with paragraph 12A-24.
Spark plugs fouled or improperly gapped.	Perform ignition check. Excessive rpm drop on one or both magnetos usually indicates defective spark plugs.	Remove, clean, and regap all spark plugs. Replace if defective. Set spark plug gap at .016 inch.
Fuel injection nozzles clogged.	Remove and check visually.	Remove and clean nozzles. Refer to paragraph 12A-31.
Fuel contamination.	Check fuel strainer.	Drain fuel tank sumps, fuel lines; clean fuel strainer and fuel control filter screens; clean fuel manifold valve.
Propeller control in low rpm position.	Check visually.	Use high rpm for all ground operations.
Incorrect ignition timing or defective magneto points.		See paragraph 12-54.
Excessive induction system air leaks.	Check visually.	Determine cause of leaks and correct.
ENGINE DOES NOT ACCELERATE PROPERLY.		
Idle mixture set too lean.		Adjust in accordance with paragraph 12A-24.
Worn linkage.	Check visually.	Replace worn linkage.
Propeller control in low rpm position.	Check visually.	Use high rpm for all ground operations.
ENGINE RUNS ROUGH.		
Restricted nozzles.		Remove and clean nozzles. Refer to paragraph 12A-31.
Improper idle mixture adjustment.	Improper idle mixture also affects operation at higher speeds.	Adjust in accordance with paragraph 12A-24.
Fuel pump or fuel control unit defective.	Check for high or low fuel flow indication. Establish that fuel flow indicator is not at fault.	Fuel pump pressure adjustment and overhaul of fuel control unit are a part of the basic calibration. Continental authorized personnel should accomplish this.

ENGINE DOES NOT ACCELERATE PROPERLY. (Cont)		
Vaporized fuel.	Check for fluctuating fuel flow indicator.	Operate electric fuel pumps to clear vapor. If unable to clear, clean vapor injector jet in vapor separator cover of fuel pump with solvent. Do not use wire to clean.
POOR IDLE CUT-OFF.		
Mixture control linkage improperly rigged.	Check that arm on fuel control unit hits idle cut-off stop.	Rig in accordance with paragraph 12A-41.
Defective fuel manifold valve.	Engine sputters erratically but eventually cuts off.	Remove and clean in accordance with paragraph 12A-27. Replace if defective.
Defective fuel control unit.	If neither of the above causes are found, fuel control unit is at fault.	Replace fuel control unit.

12A-5. ENGINE REMOVAL. When disconnecting lines, wires and hoses it is a good practice to code or tag the parts to aid in reinstallation. Similarly, shop notes made at removal will often clarify reinstallation procedures.

NOTE

The Model 185 engine is easier to remove with the engine mount attached. However, if the induction airbox and attached linkage is first removed, the engine can be removed from the engine mount.

a. Remove the engine cowling and drain engine oil.
b. Turn off fuel shut-off valve.
c. Remove the spinner and propeller. Seal the exposed end of the crankshaft to prevent the entry of dust and dirt.
d. Remove flexible heater hoses, shrouds, and exhaust stacks.

NOTE

During the following procedure remove any clamps which secure controls, wires, hoses or lines to the engine, engine mount, or attached brackets, so they will not interfere with engine removal. Some of the items listed below can be disconnected at more than one place. It may be desirable to disconnect some of these items at other than the places indicated. The reason for engine removal should be the governing factor in deciding at which point to disconnect them.

e. Tag and disconnect:
1. Induction air control at airbox.
2. Throttle and mixture controls at bellcranks on airbox and at bracket on engine.
3. Propeller control at offset extension on governor arm, and at clamps on intake manifold and engine.
4. Ignition switch leads at magnetos.
5. Electrical wires at generator.
6. Cylinder head temperature bulb at No. 1 cylinder.
7. Oil temperature electrical connector located just below oil cooler.
8. Oil pressure hose at firewall.
9. Tachometer cable at engine tachometer drive.
10. Electrical wires at starter.
11. Manifold pressure line or hose at manifold.
12. Fuel supply hose (from fuel strainer) at fuel pump.
13. Vapor return hose at solenoid on firewall.
14. Fuel hose (from fuel manifold valve) at firewall.
15. Vacuum system suction hose at vacuum pump.
16. Electric fuel pump wires where clamped to engine mount.

f. Attach a hoist to the hoisting lug on top of the engine and take up engine weight on hoist.
g. Check for and disconnect or remove any items which would interfere with engine removal.
h. Remove bolts attaching engine mount to upper part of firewall, then remove bolts attaching engine mount to lugs protruding through lower part of firewall. Balance the engine by hand as the last of these bolts are removed, and slowly hoist the engine and pull it forward. Carefully guide disconnected components out of the engine assembly.
i. After engine and mount have been removed, the mount, remaining lines and hoses, and accessories can be removed from the engine if desired.

12A-6. PIVOTING ENGINE AWAY FROM FIREWALL. Access to engine components and accessories on the back of the engine may be gained by swinging the engine forward and downward, pivoting about the lower engine mount bolts at the lugs protruding through the firewall. Attach a suitable hoist to the hoisting lug on top of the engine and take up engine weight with the hoist.

NOTE

The working space needed will determine just how many items will have to be disconnected before the engine can be pivoted away from the firewall. A very small space may require that only a few items be disconnected or unclamped. A larger working space will require most of the items listed in paragraph 12A-5, step "e," to be disconnected. Always be sure that lines, hoses, electrical wires, and controls are not stretched or broken. Cap or plug all disconnected lines, hoses, and fittings.

After disconnecting and/or unclamping items to permit swinging the engine down as much as needed, remove the bolts from the engine mount upper attachment points and loosen the pivot bolts at the bottom of the engine mount. Slowly lower the hoist, watching for any additional items that may need to be disconnected or unfastened. The induction airbox will have to be removed for maximum access.

Use paragraph 12A-11 as a guide for reinstalling the engine after pivoting it away from the firewall.

12A-7. CLEANING. Instructions for cleaning engines, given in paragraph 12-6, also apply to the Model 185.

12A-8. REMOVAL OF ENGINE ACCESSORIES is discussed in paragraph 12-7.

12A-9. ENGINE DISASSEMBLY AND OVERHAUL should be performed in accordance with Continental Motors Corporation instructions.

12A-10. POWERPLANT BUILD-UP consists of the installation of parts, accessories and components to the basic engine to build up a powerplant unit ready for installation on the airplane. All safety wire, lockwashers, palnuts, elastic stop nuts, gaskets and rubber connections should be new parts.

12A-11. ENGINE INSTALLATION.

a. After installing any accessories removed, attach the engine mount to the engine. Connect any hoses, lines and other items which were disconnected after the engine was removed from the airplane.

b. Hoist the engine near the firewall and carefully route controls, lines and hoses in place as the engine is positioned on the fuselage.

c. Install the upper engine mount bolts.

d. Install bolts securing engine mount to the lugs protruding through the lower part of the firewall.

NOTE

Figure 12A-4 illustrates details of the engine shock mounts and the engine mount attachment points. When tightening the bolts, use the standard torque values listed in Section 1.

e. Remove hoist.

f. Identify and connect:

1. Vacuum system suction hose at vacuum pump.
2. Fuel hose (from fuel manifold valve) at firewall.
3. Vapor return hose at solenoid on firewall.
4. Fuel supply hose at fuel pump.
5. Manifold pressure line or hose at manifold.
6. Electrical wires at starter.
7. Tachometer cable at engine tachometer drive.
8. Oil pressure hose at firewall.
9. Oil temperature electrical connector located just below oil cooler.
10. Cylinder head temperature bulb at No. 1 cylinder.
11. Electrical wires at generator.
12. Ignition switch leads at magnetos.
13. Electric fuel pump wires at clamp on engine mount.

g. Connect propeller control at offset extension on governor arm. Install clamps securing control, and rig in accordance with paragraph 14-26.

h. Secure throttle and mixture controls and rig in accordance with paragraphs 12A-40 and 12A-41.

i. Secure induction air control at airbox and rig in accordance with paragraph 12A-38.

j. Install exhaust stacks, shrouds, and flexible heater hoses. Use new exhaust gaskets regardless of apparent condition of those removed.

k. Remove the covering provided for the front end of the crankshaft, clean and install propeller and spinner.

l. Service the engine with proper grade and amount of oil.

m. Perform engine run-up and make final adjustments on engine and propeller controls.

n. Check complete engine installation for proper security, correct routing of controls, lines, hoses, and wires, proper safetying, and tightness of all connections.

12A-12. EXTREME WEATHER MAINTENANCE.

12A-13. COLD WEATHER starting will be made easier by the installation of an optional oil dilution system and a ground service receptacle which permits quick connection of an external power source.

The starting system used on this airplane requires a special procedure for hand-cranking. Starting with a 12-volt automobile system, emergency battery charging, hand-cranking, and other aids to cold weather operation are discussed in paragraphs 12-11 through 12-18.

12A-14. HOT WEATHER. In hot weather with a hot engine, a fluctuating fuel flow slightly lower than normal may be obtained. This is an indication of vaporized fuel and the starter should not be energized until a steady fuel flow is obtained by purging the system. To prevent flooding the engine while purging, set the mixture control in idle cut-off and close the throttle. Then turn the auxiliary fuel pump switch to "HIGH"; the auxiliary fuel pumps will run with a deep growling or rattling sound until the vapor is purged. After purging, open the throttle one inch, engage the starter and push the mixture control to full rich. After the engine starts, turn the auxiliary fuel pumps to "LOW-PRIME." It may be necessary to readjust the mixture between full rich and idle cut-off for acceleration of the engine to 1000-1200 RPM. To assure complete elimination of vapor under severe

conditions, idle the engine 800-1000 RPM with the auxiliary fuel pump switch on "LOW-PRIME" and with full rich mixture until there is no sign of vapor.

Engine mis-starts characterized by weak, intermittent explosions followed by puffs of black smoke from the exhausts are caused by overpriming or flooding. This situation is more apt to develop in hot weather, or when the engine is hot. If it occurs, repeat the starting routine with the throttle approximately 1/2 open, the mixture in idle cut-off and the auxiliary pump off. As the engine fires, move the mixture control to full rich and decrease the throttle to idle.

If the engine is under-primed, as may occur in cold weather with a cold engine, repeat the starting procedure with the auxiliary fuel pump switch on "HIGH" until the engine fires.

If prolonged cranking is necessary, allow the starter motor to cool at frequent intervals, since excessive heat may damage the armature.

12A-15. DUSTY CONDITIONS. Dust inducted into the engine intake system is probably the greatest single cause of early engine wear. Under high dust conditions the induction air filter should be serviced daily as outlined in Section 2.

SHOP NOTES:

SHOP NOTES:

12A-16. SEACOAST AREAS, HUMID AREAS. In salt water areas special care should be given to keep the engine and engine accessories clean to prevent oxidation. Fuel and oil should be checked frequently and drained of condensed moisture in humid areas.

12A-17. STARTING SYSTEM. The automatically engaged starter, starter adapter, and maintenance procedures are discussed in paragraphs 12-29 through 12-34. The key-operated starting system is outlined in paragraph 12-49.

12A-18. AIR INDUCTION SYSTEM. Ram air, passing through an air filter, enters at the front of the cowling below the propeller. A duct, fabricated into the lower cowling, directs the air through a flexible connection into the induction airbox. From the airbox, the air either passes upward into the fuel-air control unit or, if the induction hot air valve is closed, flows downward into the cowling. With hot air selected (valve closed), hot air from around the engine enters the left side of the airbox through spring-loaded doors opened by engine suction. They close automatically in case of engine backfire to prevent a fire hazard from a backfire being discharged into the engine area. Bellcranks and linkage for the throttle and mixture controls are located on the right side of the airbox, the bellcranks pivoting around the hot air valve shaft extending through the airbox.

12A-19. REPLACEMENT OF INDUCTION AIRBOX.

a. Remove cowling.

b. Disconnect throttle and mixture controls from bellcranks on airbox.

c. Disconnect throttle and mixture linkage at arms on fuel-air control unit.

d. Disconnect induction hot air control and airbox drain tube and remove from airbox.

e. Cut the safety wire and remove the four bolts attaching airbox to fuel-air control unit, then remove the airbox.

f. To install the induction airbox, reverse the preceding steps. Check that throttle and mixture controls and linkage, and the induction hot air control are rigged properly.

12A-20. FUEL INJECTION SYSTEM.

12A-21. Fuel injection is standard equipment on all Model 185 aircraft. This fuel injection system is a simple, low pressure system of injecting fuel into the intake valve port in the cylinder head. It is a multinozzle, continuous flow type which controls fuel flow to match engine airflow. Any change in throttle position, engine speed, or a combination of both, causes changes in fuel flow in the correct relation to engine airflow. A manual mixture control and a fuel flow indicator are provided for leaning at any combination of altitude and power setting. The continuous flow system uses a typical rotary-vane fuel pump. There are no running parts in the system except for the engine-driven fuel pump.

NOTE

Throughout the fuel system use a thread lubricant of graphite-petrolatum (Spec. MIL-T-5544, or equivalent) only if necessary. Anti-seize compound (Spec. JAN-A-669, or equivalent) may be used to seal a leaking connection. Apply sparingly to male fittings only, omitting the first two threads. Always be sure that a compound, the residue from a previously used compound, or any other foreign material cannot enter the system.

12A-22. FUEL-AIR CONTROL UNIT. This unit occupies the position ordinarily used for a carburetor, at the intake manifold inlet. The function of this unit is to control engine air intake and to set the metered fuel flow for proper fuel-air ratio. There are three control elements in this unit, one for air and two for fuel, one of which is for fuel mixture and the other for fuel metering. Main fuel enters the control unit through a strainer and passes to the metering valve. The position of the metering valve controls this fuel passed to the manifold valve and nozzles. A linkage connecting the metering valve to the air throttle proportions airflow to fuel flow. The position of the mixture valve determines the amount of fuel returned to the fuel pump. The fuel control portion of the fuel-air control unit is enclosed in a shroud and is blast-air cooled to help prevent vapor lock.

12A-23. REPLACEMENT OF FUEL-AIR CONTROL UNIT.

a. Remove the induction airbox. Turn off fuel shut-off valve.

b. Tag and disconnect the fuel lines and hoses at the fuel control unit. Some are enclosed inside a flexible duct to aid in cooling. Loosen the clamp and slide the duct back to gain access to fittings. Plug or cap all disconnected lines, hoses, and fittings.

c. Loosen the clamps securing the two hoses which connect the fuel-air control unit to the intake manifolds, and slide the hoses away from the connection.

d. Cut the safety wire and remove the four oil pan bolts which secure the fuel-air control unit to the engine. Pull the unit down to remove. Cover the open ends of the intake manifolds to prevent the entry of foreign material.

e. To install the fuel-air control unit, reverse the preceding steps. Check that throttle and mixture controls and linkage, and the induction hot air control are rigged properly.

12A-24. FUEL-AIR CONTROL UNIT ADJUSTMENTS. (See figure 12A-2.) The idle speed adjustment is a conventional spring-loaded screw located in the air throttle lever. The idle mixture adjustment is the locknut at the metering valve end of the linkage. Tightening the nut to shorten the linkage provides a richer mixture. A leaner mixture is obtained by backing off the nut to lengthen the linkage. Adjust to obtain smoothest idling, which is usually a slight and momentary gain in idle speed as the mixture control is moved slowly toward IDLE CUT-OFF. Idle speed is approximately 600 rpm.

12A-25. FUEL MANIFOLD VALVE (FUEL DISTRIBUTOR). From the fuel control unit fuel is delivered to the fuel manifold which provides a central point for dividing fuel to the individual cylinders. In the fuel manifold, a diaphragm and plunger valve raises or lowers, by fuel pressure, to open or close the individual cylinder fuel supply ports simultaneously. A ball check valve under the plunger serves to insure that the plunger fully opens the outlet ports before fuel flow starts. Thus, there is no unbalanced restriction to fuel flow in the fuel manifold. A fine mesh screen is included in the fuel manifold as additional protection of the injection nozzles against dirt or foreign matter.

12A-26. REMOVAL OF FUEL MANIFOLD.

NOTE

Plug or cap all disconnected lines, hoses, and fittings.

a. Disconnect the two fuel hoses and the six fuel injection lines at the fuel manifold.
b. Remove the two crankcase bolts which secure the fuel manifold bracket and remove. The manifold may be removed from the bracket if desired.

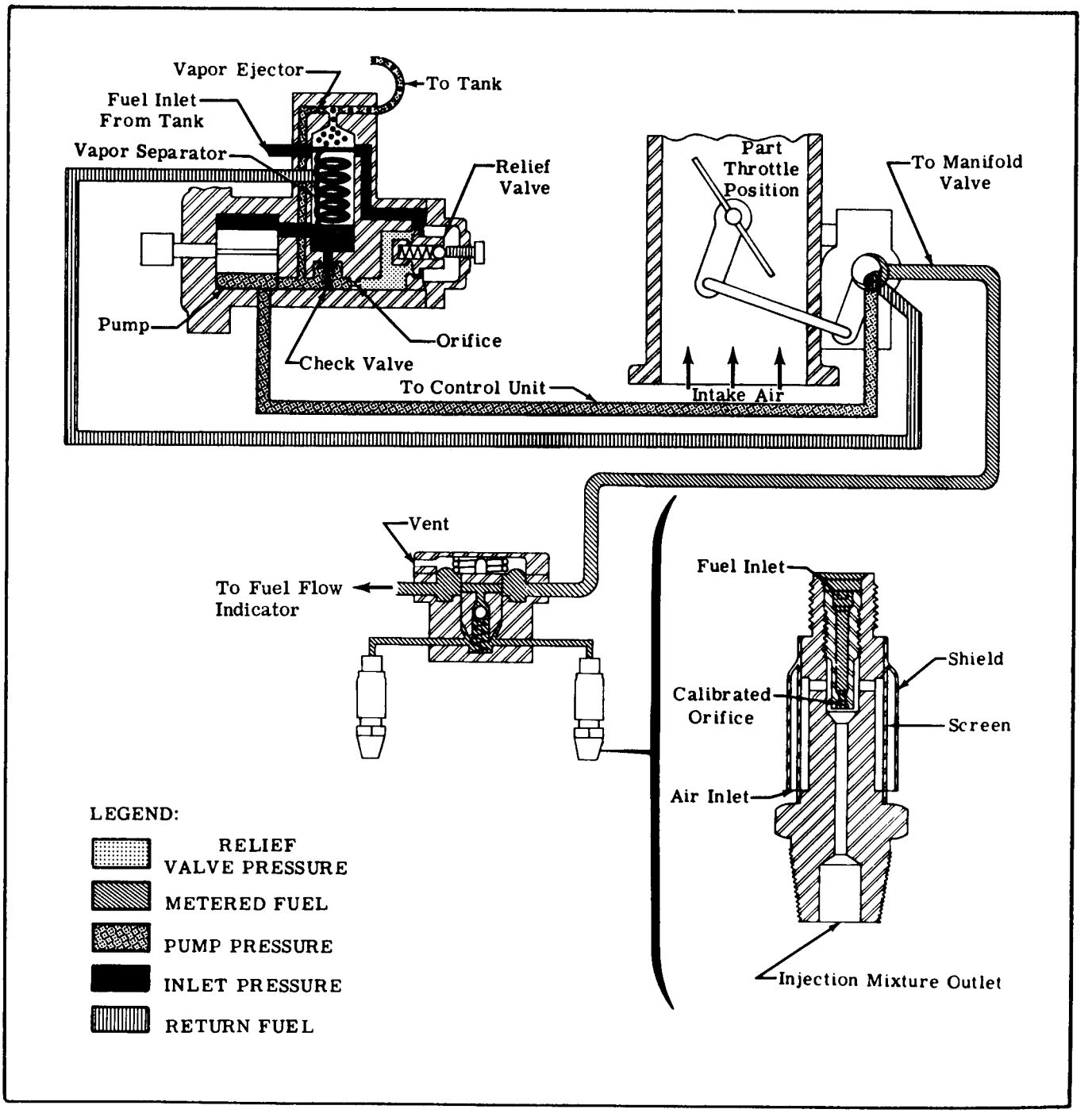

Figure 12A-1. Fuel Injection Schematic

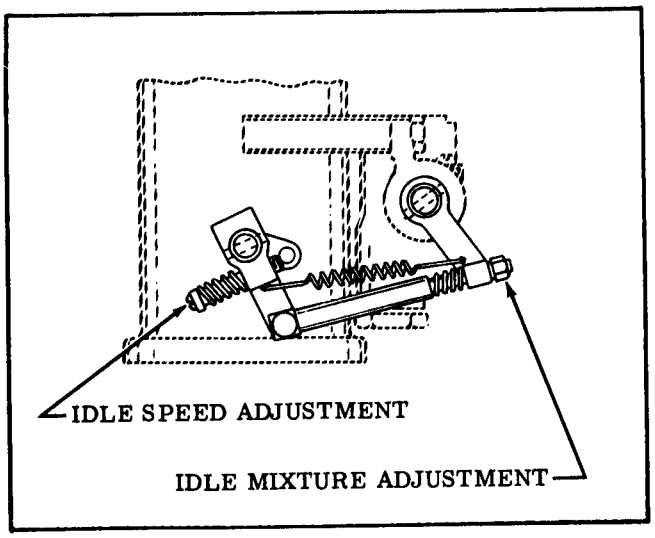

Figure 12A-2. Idle Adjustments

12A-27. CLEANING FUEL MANIFOLD VALVE ASSEMBLY.

a. Disconnect all lines and remove the fuel manifold valve assembly.

b. Hold the top cover down against internal spring until all four attaching screws have been removed, then gently lift off the cover. Use care not to damage the spring-loaded diaphragm below it.

c. Remove the upper spring and lift the diaphragm assembly straight up.

NOTE

If the valve attached to the diaphragm is stuck in the bore of the body, grasp the center nut and rotate and lift at the same time to work gently out of the body.

d. Remove the lower ball and spring.

CAUTION

The filter screen is a tight fit and may be damaged if removal is attempted. It should be removed only if a new screen is to be installed.

e. Using clean gasoline, flush out the chamber below the screen.

f. Flush above the screen and inside the center bore making sure that outlet passages are open. Use only a gentle stream of compressed air to remove dust and dirt and to dry.

g. Clean the diaphragm and valve, top cover, and ball and springs in the same manner.

h. Replace lower spring and ball (ball on TOP of spring).

i. Carefully replace diaphragm and valve, making sure ball and spring feed into hollow end of valve. Check that valve works freely.

j. Place upper spring in position.

k. Align mounting holes in body, diaphragm, and top cover, locating the small vent hole in the cover to the rear. Hold the cover down against the spring while installing and tightening all four attaching screws. Safety the screws.

l. Install the fuel manifold valve assembly on the engine and reconnect all lines.

12A-28. INSTALLATION OF FUEL MANIFOLD.

a. Secure the fuel manifold to the crankcase with two crankcase bolts.

b. Connect the two fuel hoses and the six fuel injection lines.

12A-29. FUEL DISCHARGE NOZZLES. From the fuel manifold, individual fuel lines carry the metered fuel to the fuel discharge nozzles, one for each cylinder. These nozzles are installed in the cylinder heads outside each intake valve. An air bleed arrangement is incorporated in each nozzle. This aids in vaporization of fuel and, by breaking the high vacuum at idle, maintains the fuel lines solidly filled and ready for instant acceleration of the engine. Nozzles are stamped with a letter on the hex of the nozzle body. Each engine has matched (same letter) nozzles. Replacement nozzles must match, but a matched set of another letter may be used.

12A-30. REMOVAL OF FUEL DISCHARGE NOZZLES.

NOTE

Plug or cap all disconnected lines and fittings.

a. Disconnect the fuel injection lines at the fuel discharge nozzles. Remove the nozzles with a 1/2 inch deep socket.

12A-31. CLEANING OF FUEL DISCHARGE NOZZLES. To clean nozzles, immerse in clean solvent. Use compressed air to dry. Do not remove shield to clean air screens in nozzle. Do not use a wire or other object to clean orifices.

12A-32. INSTALLATION OF FUEL DISCHARGE NOZZLES.

a. Install the fuel discharge nozzles in the cylinders using a 1/2 inch deep socket.

b. Connect the fuel injection lines at the fuel discharge nozzles.

c. Check installation for crimped lines, loose fittings, etc.

12A-33. FUEL INJECTION PUMP. The fuel pump is a positive-diaplacement, rotating vane type. It has a splined shaft for connection to the accessory drive section of the engine. Fuel enters the pump at the swirl well of the vapor separator. Here, vapor is separated by a swirling motion so that only liquid fuel is fed to the pump. The vapor is drawn from the top center of the swirl well by a small pressure jet of fuel and is fed into the vapor return line and returned to the fuel tank. Since the pump is engine driven, changes in engine speed affect total pump flow proportionally. The pump supplies more fuel than is required by the engine, therefore a relief valve is provided. A check valve is also provided to permit auxiliary pump pressure to bypass the engine-driven pump for starting, or in the event of engine-driven fuel pump failure in flight.

12A-34. REPLACEMENT OF FUEL INJECTION PUMP.

a. Turn off the fuel shut-off valve.

NOTE

The engine can be pivoted away from the firewall for access to accessories on the back of the engine. Refer to paragraph 12A-6.

b. Tag and disconnect all hoses and lines attached to the fuel pump and remove the shroud surrounding the pump.

c. Remove the nuts, lockwashers, and washers securing the fuel pump.

d. Remove the pump and gasket.

e. Install a temporary cover on the engine pad if a replacement pump is not being installed immediately.

f. Reverse the preceding steps to install the fuel pump. Use a new fuel pump gasket.

12A-35. FUEL INJECTION PUMP ADJUSTMENTS. The fuel injection pump pressure adjustment requires special equipment and procedures. Cessna Service Kit No. SK320-2 provides a special pressure indicator, lines, and instructions for performing accurate calibration of the engine-driven fuel pump pressure. With engine at normal operating temperatures and mixture control set full rich, the unmetered fuel pressure should be 9.0 to 11.0 psi at 600 rpm, and 25.3 to 26.8 psi at 2625 rpm.

12A-36. ENGINE CONTROLS. The throttle (prior to 1962), propeller control, and mixture control lock in any position desired. To move one of these controls, the spring-loaded button in the end of the control must be depressed. Releasing the button locks the control in the position selected. Turning the control knob without depressing the button screws the control in or out for precision settings. The throttle (1962 and on) does not have the locking button and cannot be screwed in or out. Instead, a knurled friction-type locknut is provided on the throttle. Clockwise rotation of the locknut increases friction to prevent creeping.

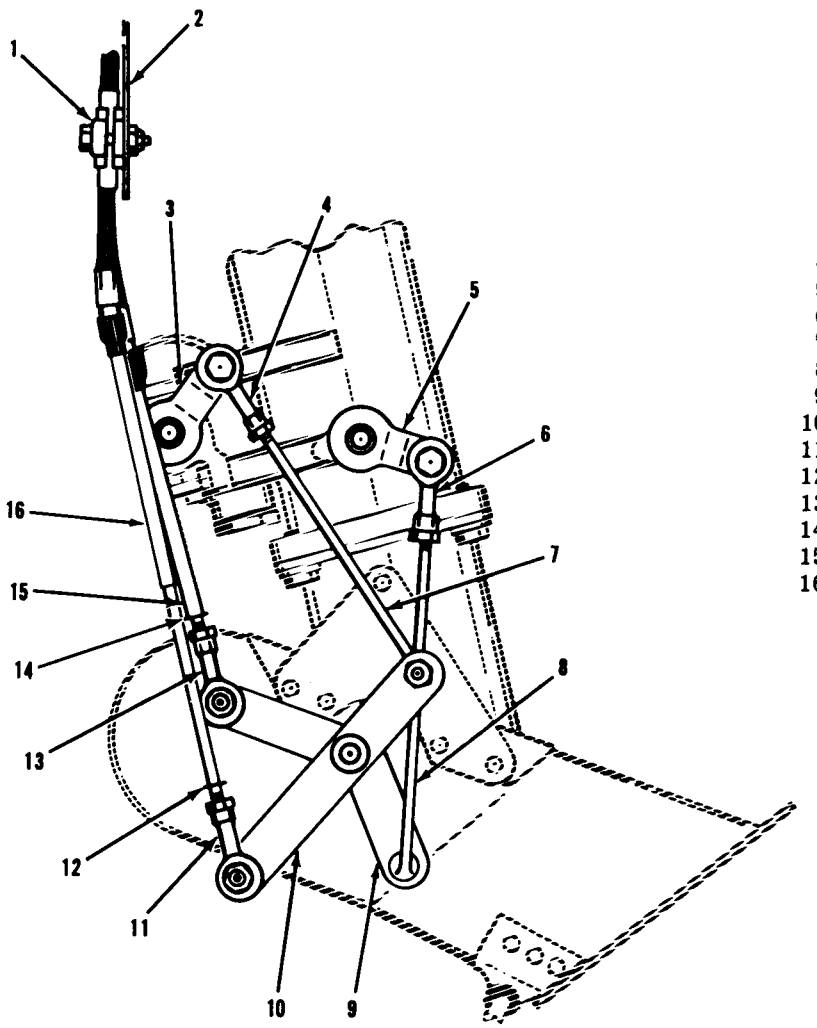

1. Clamp
2. Bracket
3. Mixture Control Arm
4. Rod End
5. Air Throttle Arm
6. Rod End
7. Mixture Link Rod
8. Throttle Link Rod
9. Throttle Bellcrank
10. Mixture Bellcrank
11. Rod End
12. Retaining Ring
13. Rod End
14. Retaining Ring
15. Throttle Control
16. Mixture Control

Figure 12A-3. Throttle and Mixture Controls

12A-37. RIGGING ENGINE CONTROLS.

NOTE

Idle speed and idle mixture adjustments are discussed in paragraph 12A-24.

12A-38. INDUCTION HOT AIR CONTROL RIGGING.
a. Loosen the clamp securing the control to the bracket on the airbox.
b. Push control full in, then pull it out approximately 1/8 inch for cushion.
c. Shift the control housing in its clamp so that the air valve lever is full forward, with valve seating inside the airbox. Tighten clamp in this position.
d. Pull the control out and check that the air valve inside the airbox seats in the opposite direction.
e. Check that the bolt and nut at the air valve lever secures the control wire and that the bolt will swivel in the lever.
f. Bend the wire tip 90° to prevent it from being withdrawn if the attaching nut should become loose.
g. When installing a new control, it may be necessary to shorten the wire and/or control housing.
h. The air valve must seat in both positions and the control should have approximately 1/8 inch cushion at the instrument panel when pushed full in.

12A-39. PROPELLER GOVERNOR CONTROL RIGGING is outlined in paragraph 14-26.

12A-40. THROTTLE CONTROL RIGGING. (See figure 12A-3.)

NOTE

When checking rigging of the throttle control, see that the arm on the throttle body contacts the mechanical stops in both directions, that the throttle has approximately 1/8 inch cushion at the instrument panel, and that the small retaining ring near the end of the control contacts the end of the control housing at the same time that the idle stop is reached. When complete rigging is required, use the following procedure.

a. Disconnect throttle control rod end (13) from bellcrank (9) on airbox. Disconnect rod end (6) on link rod from arm (5) on air body.
b. Shorten the link rod as much as possible and connect to arm on air body.
c. Pull throttle control full out until retaining ring (14) contacts control housing (15).
d. Move arm (5) to idle. With the idle screw against the idle stop, adjust rod end (13) to align with the bellcrank, and connect in this position.
e. Push throttle control full forward and check that when full throttle stop is reached, there is approximately 1/8 inch cushion at the instrument panel.
f. More or less cushion may be obtained by readjusting the two rod ends as necessary. After rigging is completed, be sure that the idle stop is reached at the same time that retaining ring (14) contacts the throttle control housing and that the full throttle stop is reached with the proper amount of cushion. Tighten the jam nuts to secure the rod ends. Be sure that threaded ends of rods extend into rod ends far enough. An inspection hole is provided in each rod end for checking purposes.

12A-41. MIXTURE CONTROL RIGGING. (See figure 12A-3.)

NOTE

When checking mixture control rigging, see that the arm on the fuel control unit contacts the mechanical stops in both directions, that the mixture control has approximately 1/8 inch cushion at the instrument panel, and that the small retaining ring near the end of the control contacts the end of the control housing at the same time that the idle cut-off stop is reached. When complete rigging is required, use the following procedure.

a. Disconnect mixture control rod end (11) from bellcrank (10) on airbox. Disconnect rod end (4) on link rod from arm (3) on fuel control unit.
b. Shorten the link rod as much as possible and connect to arm on fuel control unit.
c. Pull mixture control full out until retaining ring (12) contacts control housing (16).
d. Move arm (3) to idle cut-off. With the arm against its stop, adjust rod end (11) to align with the bellcrank, and connect in this position.
e. Push mixture control full forward and check that when the full rich stop is reached, there is approximately 1/8 inch cushion at the instrument panel. More or less cushion may be obtained by readjusting the two rod ends as necessary. After rigging is completed, be sure that the idle cut-off stop is reached at the same time that retaining ring (12) contacts the mixture control housing and that the full rich stop is reached with the proper amount of cushion. Tighten the jam nuts to secure the rod ends. Be sure the threaded ends of rods extend into rod ends far enough. An inspection hole is provided in each rod end for checking purposes.

12A-42. IGNITION. Bendix-Scintilla S-200 series magnetos and a starting vibrator starting system are used on the Model 185. Refer to paragraphs 12-48 through 12-54 for description and maintenance procedures for these magnetos.

12A-43. ENGINE COWLING used on the Model 185 is similar to that used on current Model 180 aircraft. Quick-release fasteners are provided for easy removal. Cowl flaps must be lowered and disconnected, the flexible connection at the induction airbox must be released, and the adapter plate at the electric fuel pumps cooling shroud must be detached before the cowling can be removed. Paragraphs 12-58 and 12-59 outline cleaning and repair of cowling.

12A-44. ENGINE BAFFLES are discussed in paragraphs 12-60 through 12-63.

12A-45. ENGINE MOUNT (TUBULAR). The engine mount is composed of sections of tubing welded together and reinforced with welded gussets. The engine is attached to the engine mount with shock-mount assemblies which absorb engine vibrations. The Model 185 engine mount differs from the others in that provision is made for pivoting the engine forward and downward, around the lower attachment bolts. Details of the engine mount are illustrated in figure 12A-4. Refer to paragraph 12A-6 for the procedure to be used when pivoting the engine.

12A-46. REPLACEMENT of the engine mount involves removing the engine with engine mount attached, then removing the engine mount from the engine. Refer to paragraph 12A-5 for engine removal and paragraph 12A-11 for engine installation.

12A-47. REPAIR of the engine mount should be performed carefully as suggested in paragraphs 19-54 through 19-57. The mount should be painted with heat-resistant black enamel after welding, or whenever the original finish has been removed.

12A-48. OIL SYSTEM. The Model 185 oil system is the same as the Models 180 and 182 oil system, which is discussed in paragraphs 12-68 through 12-70.

12A-49. EXHAUST SYSTEM. Refer to paragraphs 12-71 through 12-74 for maintenance of the exhaust system. Particular care should be taken to perform a thorough inspection of the exhaust system, since a defective exhaust system may permit exhaust fumes to enter the cabin through the heating system.

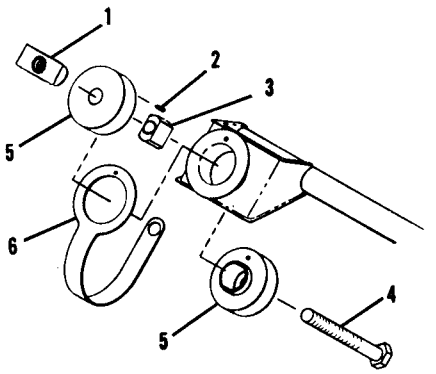

ENGINE-TO-MOUNT

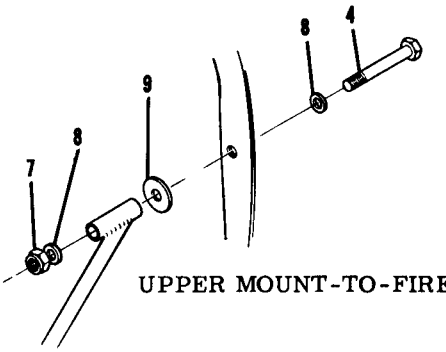

UPPER MOUNT-TO-FIREWALL

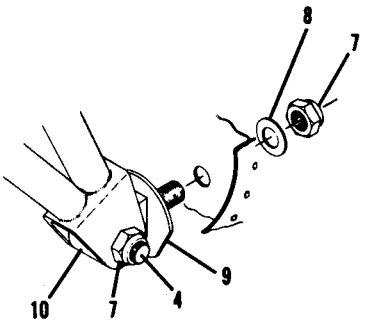

LOWER MOUNT-TO-FIREWALL

1. Barrel Nut
2. Pin
3. Spacer
4. Bolt
5. Engine Shockmounts
6. Ground Strap
7. Nut
8. Washer
9. Washer
10. Eye Bolt

NOTE

Tab lockwashers are used under bolt heads of some engine shockmounts. Use them if they were originally installed.

When tightening bolts shown here, use the standard torque values listed in Section 1.

Figure 12A-4. Engine Mount Details

SECTION 13

FUEL SYSTEMS

TABLE OF CONTENTS Page

FUEL SYSTEMS 13-1
Trouble Shooting 13-1
Trouble Shooting - Model 185 13-3
Fuel Cell Replacement 13-10
Preservation of Fuel Cells 13-10
Fuel Cell Repairs 13-10
Fuel Tank Replacement. 13-13
Replacement of Direct-Reading Fuel Quantity Gage 13-13
Replacement of Fuel Gage Transmitters . .13-13
Checking Fuel Vent. 13-13
Fuel Selector Valve Replacement 13-18
Fuel Selector Valve Repair 13-18
Fuel Strainer Replacement and Cleaning 13-18
Fuel Strainer Drains 13-18
Primer Systems 13-18
Electric Fuel Pumps - Model 185 13-18
Electric Fuel Pump Filter Screens. . . . 13-18A

13-1. FUEL SYSTEMS.

13-2. Fuel systems for the different models are shown in the schematic diagrams beginning with Figure 13-1. Details of the various systems are shown in succeeding illustrations. All fuel systems except the Model 185 are gravity-fed from fuel tanks located in the high wings. The Model 185 fuel system differs from that of the other Cessna models to meet the requirements of the fuel-injection engine installation. Two electric fuel pumps, a fuel accumulator tank, and vapor return lines are the major items of difference on the Model 185. The Model 185, as well as the Models 180 and 185 (1962 and on), has a forward and an aft supply line from each fuel cell to provide more usable fuel from each cell.

13-3. TROUBLE SHOOTING (Except Model 185).

PROBABLE CAUSE	ISOLATION PROCEDURE	REMEDY
NO FUEL TO CARBURETOR.		
Fuel selector valve or shut-off valve not turned on.	Check position of valve.	Turn on.
Fuel tanks empty.	Check fuel quantity.	Service with proper grade and amount of fuel.
Fuel line disconnected or broken.	Inspect fuel lines.	Connect or repair fuel lines.
Inlet elbow or inlet screen in carburetor plugged.	Disconnect fuel line at carburetor, remove elbow and screen and inspect.	Clean and/or replace.
Fuel tank outlet screens plugged.	Disconnect fuel lines from tank outlets. No flow indicates plugged screens.	Remove and clean screens and flush out fuel tanks.

PROBABLE CAUSE	ISOLATION PROCEDURE	REMEDY
NO FUEL TO CARBURETOR (Cont).		
Defective fuel selector valve or shut-off valve.	Disconnect outlet and inlet lines from valve. If fuel flows from inlet line but not through valve, it is defective.	Remove and repair or replace valve.
Plugged fuel strainer.	Inspect strainer.	Remove and clean strainer and screen.
Fuel line plugged.	Starting at the carburetor, disconnect fuel lines successively until plugged line is located.	Clean out or replace fuel line.
	NOTE To preclude possible leaks at fuel tank filler necks (the type that screws into the tank or adapter plate), fill the cavity immediately surrounding the threads with Parker Sealube (or equivalent).	
FUEL STARVATION AFTER STARTING.		
Partial fuel flow from the preceding causes.	Use the preceding isolation procedures, checking for sufficient rate of flow.	Use the preceding remedies.
Plugged fuel vent.	Check per paragraph 13-10.	See paragraph 13-10.
NO FUEL QUANTITY INDICATION.		
Fuel tanks empty.	Check fuel quantity.	Service with proper grade and amount of fuel.
Circuit breaker open or defective, or blown fuse.	Check visually; check continuity if circuit breaker is not open.	Reset circuit breaker; replace blown fuse or defective circuit breaker.
Loose connections or open circuit.	Check connections and wiring.	Tighten connections; repair or replace wiring.
Defective fuel quantity indicator or transmitter. (Also see paragraphs 16-37 and 16-38.)	Disconnect wire from transmitter at indicator not reading. Install jumper wire from good indicator (corresponding terminal) to indicator not reading. If indicator does not register, it is defective; if it does, transmitter is faulty.	Replace defective indicator or transmitter.

SHOP NOTES:

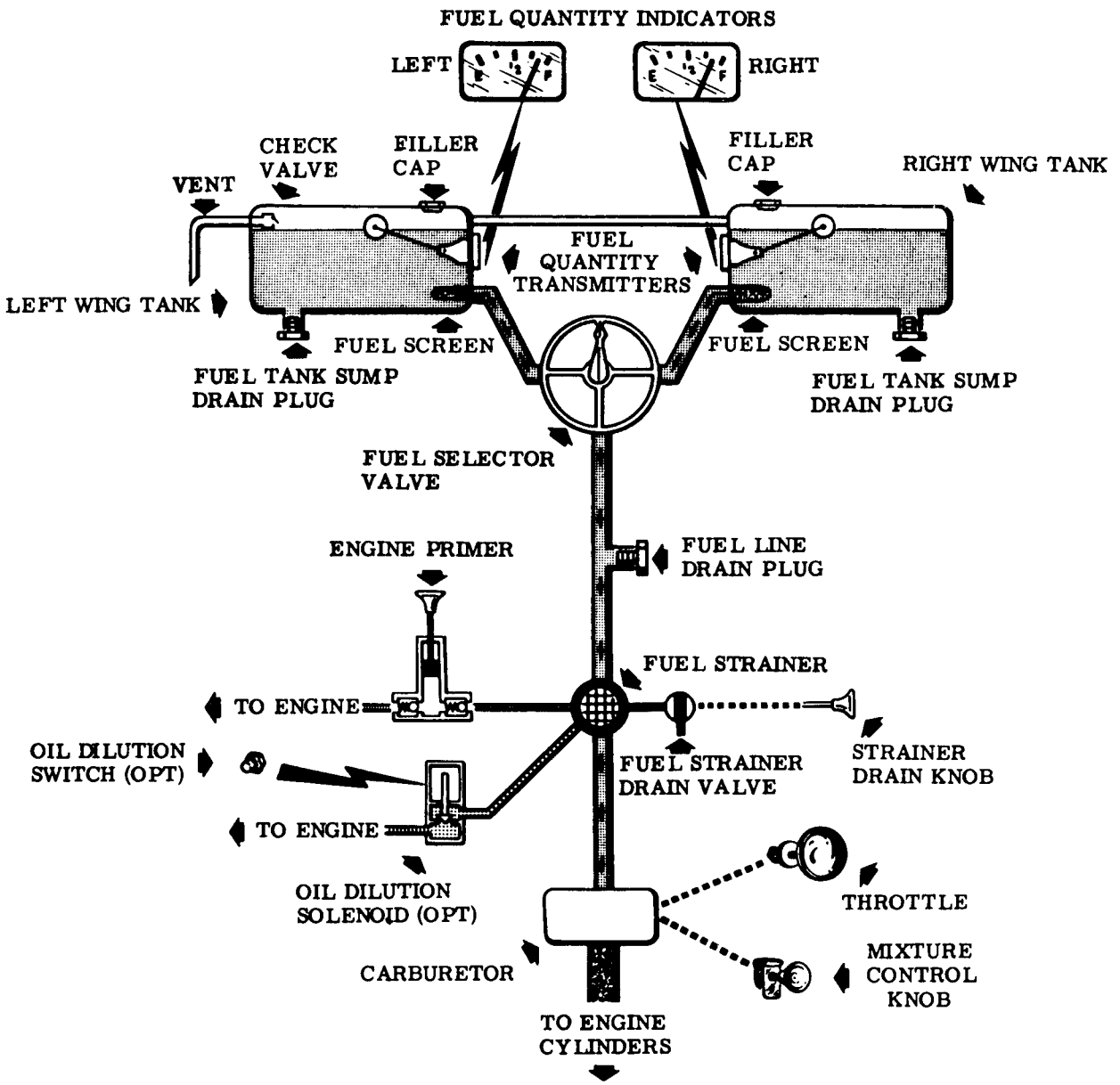

NOTE

This schematic is typical of the fuel systems used on all models except those shown in the schematics which follow. Some early models used a ball-type fuel vent check valve and direct-reading fuel gages. On the Model 150, the fuel lines from the tanks are connected to a tee and a single line is routed from the tee to a fuel shut-off valve, used instead of a selector valve. Not all aircraft use the strainer drain control. Optional quick-drain valves may be used instead of sump drain plugs.

CODE

- VENT
- FUEL
- MECHANICAL LINKAGE
- ELECTRICAL CONNECTION

Figure 13-1. Fuel Schematic

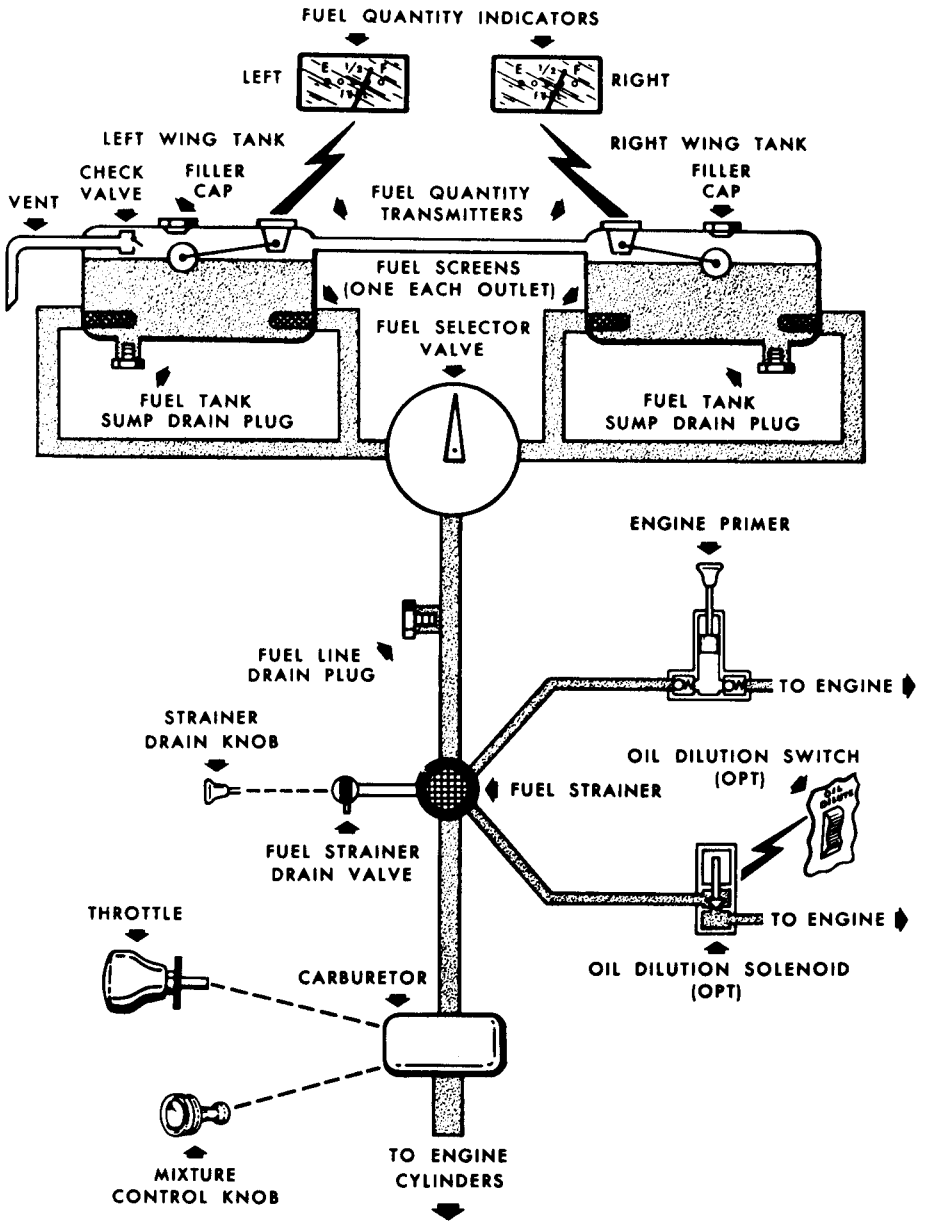

NOTE

Fuel tank sump drain plugs may be replaced with optional quick-drain valves.

CODE

- FUEL SUPPLY
- VENT
- MECHANICAL LINKAGE
- ELECTRICAL CONNECTION

Figure 13-1A. Fuel Schematic - Models 180 & 182 (1962 & on)

13-3A. TROUBLE SHOOTING (Model 185).

NOTE

This trouble shooting chart should be used in conjunction with the trouble shooting chart for the engine fuel injection system in Section 12A.

PROBABLE CAUSE	ISOLATION PROCEDURE	REMEDY
NO FUEL FLOW TO ENGINE-DRIVEN FUEL PUMP.		
Fuel shut-off valve not turned on.	Check position of valve.	Turn fuel shut-off valve on.
Fuel tanks empty.	Check fuel quantity.	Service with proper grade and amount of fuel.
Fuel line disconnected or broken.	Inspect fuel lines.	Connect or repair fuel lines.
Fuel cell outlet screens plugged.	Disconnect fuel lines from cell outlets. No flow indicates plugged screens.	Remove and clean screens and flush out fuel cells.
Defective fuel shut-off valve.	Disconnect outlet and inlet lines from valve. If fuel flows from inlet line but not through valve, it is defective.	Remove and repair or replace selector valve.
Plugged fuel strainer.	Inspect strainer.	Clean strainer and screen.
Defective check valve at electric fuel pumps by-pass.	Disconnect outlet and inlet lines from check valve. If fuel flows from inlet line but not through valve, it is defective.	Repair or replace check valve.
Fuel line plugged.	Starting at fuel pump inlet, disconnect fuel lines successively until plugged line is located.	Clean out or replace fuel line.
FUEL STARVATION AFTER STARTING.		
Partial fuel flow from the preceding causes.	Use the preceding isolation procedures, checking for sufficient rate of flow.	Use the preceding remedies.
Malfunction of engine-driven fuel pump or fuel injection system.	Refer to Section 12A.	Refer to Section 12A.
Fuel vents plugged.	Check per paragraph 13-10.	See paragraph 13-10.
NO FUEL FLOW WHEN ELECTRIC PUMPS OPERATED.		
Defective fuel pump switch.	Check continuity of switch.	Replace defective switch.
Open or defective circuit breaker.	Check visually; if not open, check continuity.	Reset. Replace if defective.
Loose connections or open circuit.	Check connections and wiring.	Tighten connections; repair or replace wiring.

PROBABLE CAUSE	ISOLATION PROCEDURE	REMEDY
Defective electric fuel pump.	Listen for clicking noise denoting pump operation. With proper power supply, lack of this indicates defective pump. If clicking noise is present, disconnect outlet line. With proper fuel supply to pump fuel under pressure should flow from outlet.	Replace defective pump.
Check valve fails to close at electric fuel pump by-pass.	Disconnect fuel line from fuel strainer to check valve, at the valve, and plug line. Operate pumps to see that valve closes and no fuel flows from open port.	Repair or replace valve.
Defective engine-driven fuel pump by-pass or defective fuel injection system.	Refer to Section 12A.	Refer to Section 12A.

NOTE

Erratic or intermittent electric pump operation is usually caused by foreign material on the plunger. Remove the end cover and three screws securing plunger cup and valve. If cup valve is free, do not remove from cup. Remove plunger and spring from pump. Clean with gasoline, gently dress out any rough spots on plunger with crocus cloth, slosh the pump in gasoline, and reassemble. Cleanliness, good gaskets, and free movement of valves and plunger are essential. Resistance of each pump should be 4.87 to 6.4 ohms. Refer to figure 13-11 for pump details.

NO FUEL QUANTITY INDICATION.		
Fuel tanks empty.	Check fuel quantity.	Service with proper grade and amount of fuel.
Circuit breaker open or defective.	Check visually; if not open, check continuity.	Reset. Replace if defective.
Loose connections or open circuit.	Check connections and wiring.	Tighten connections; repair or replace wiring.
Defective fuel quantity indicator or transmitter. (Also see paragraphs 16-37 and 16-38.)	Disconnect wire from transmitter at indicator not reading. Install jumper wire from good indicator (corresponding terminal) to indicator not reading. If indicator does not register, it is defective; if it registers, transmitter is defective.	Replace defective indicator or transmitter.

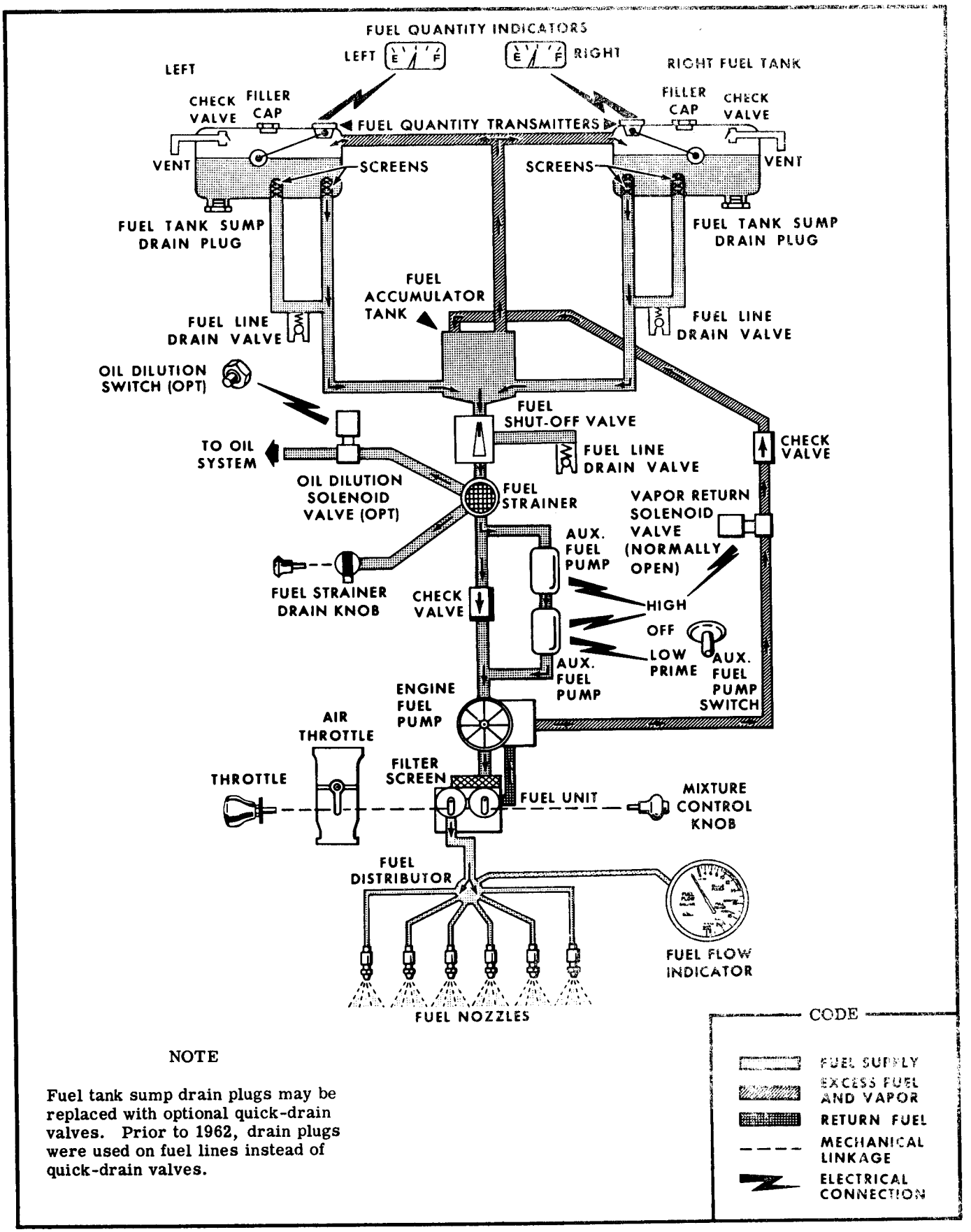

NOTE

Fuel tank sump drain plugs may be replaced with optional quick-drain valves. Prior to 1962, drain plugs were used on fuel lines instead of quick-drain valves.

Figure 13-1B. Fuel Schematic - Model 185

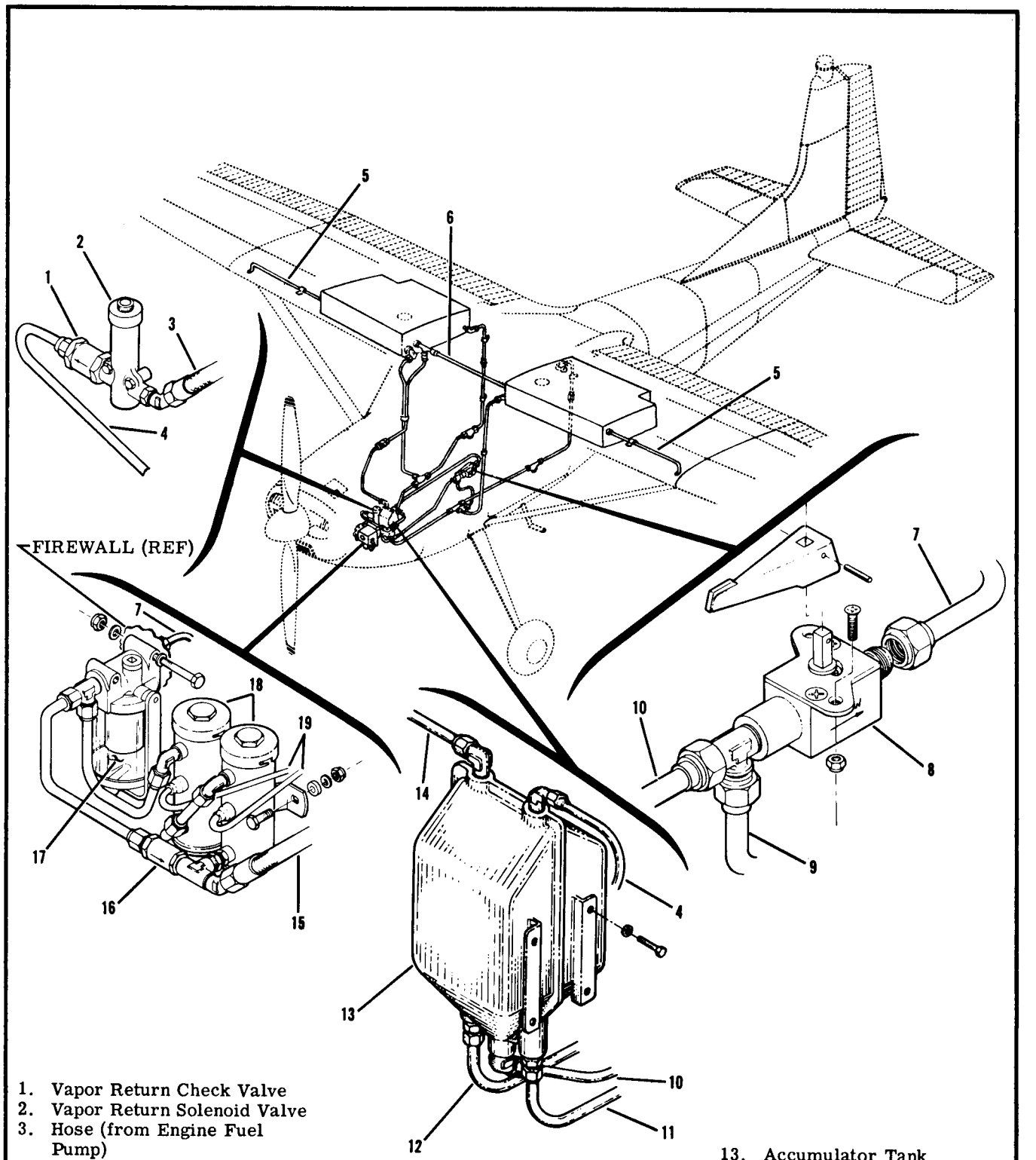

1. Vapor Return Check Valve
2. Vapor Return Solenoid Valve
3. Hose (from Engine Fuel Pump)
4. Line (Return to Accumulator Tank)
5. Fuel Tank Vent Line
6. Vapor Return (Crossover)
7. Line (Valve to Strainer)
8. Fuel Shut-Off Valve
9. Line (to Fuel Line Drain)
10. Line Accumulator Tank to Valve)
11. Line (Left Tank to Accumulator Tank)
12. Line (Rt. Tank to Accumulator Tank)
13. Accumulator Tank
14. Return Line (to Tanks)
15. Hose (to Engine Fuel Pump)
16. Check Valve
17. Fuel Strainer
18. Electric Auxiliary Fuel Pumps
19. Pump Electric Leads

Figure 13-1C. Fuel System - Model 185

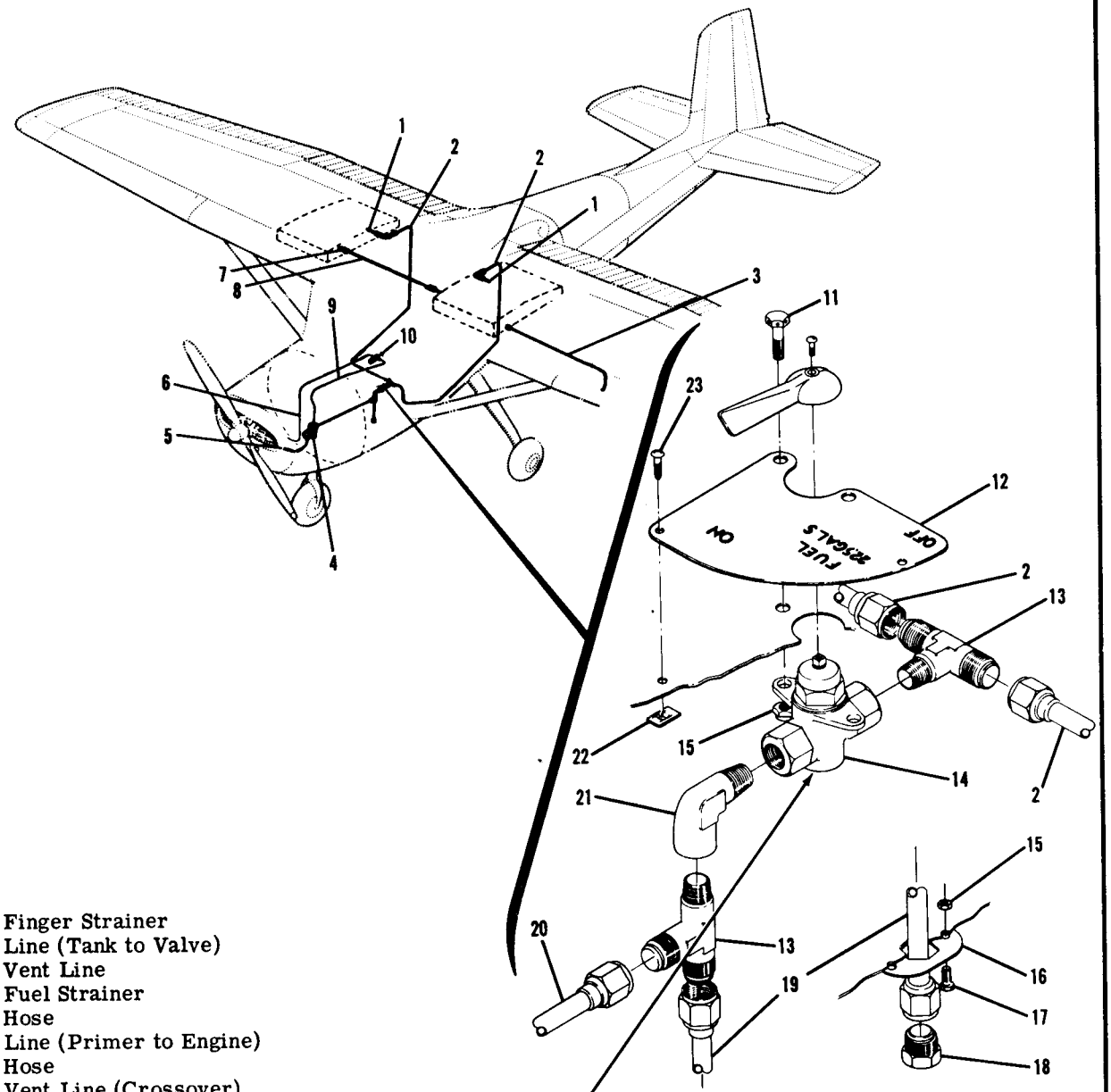

A shut-off valve with male threads on the aft end, a different tee, and nipples are used with larger fuel supply lines at serial 17770 and on.

1. Finger Strainer
2. Line (Tank to Valve)
3. Vent Line
4. Fuel Strainer
5. Hose
6. Line (Primer to Engine)
7. Hose
8. Vent Line (Crossover)
9. Line (Strainer to Primer)
10. Primer
11. Bolt
12. Plate
13. Tee
14. Shut-Off Valve
15. Nut
16. Lock Plate
17. Bolt
18. Drain Plug
19. Drain Line
20. Line (Tee to Strainer)
21. Elbow
22. Nut
23. Screw

Figure 13-2. Fuel System - Model 150

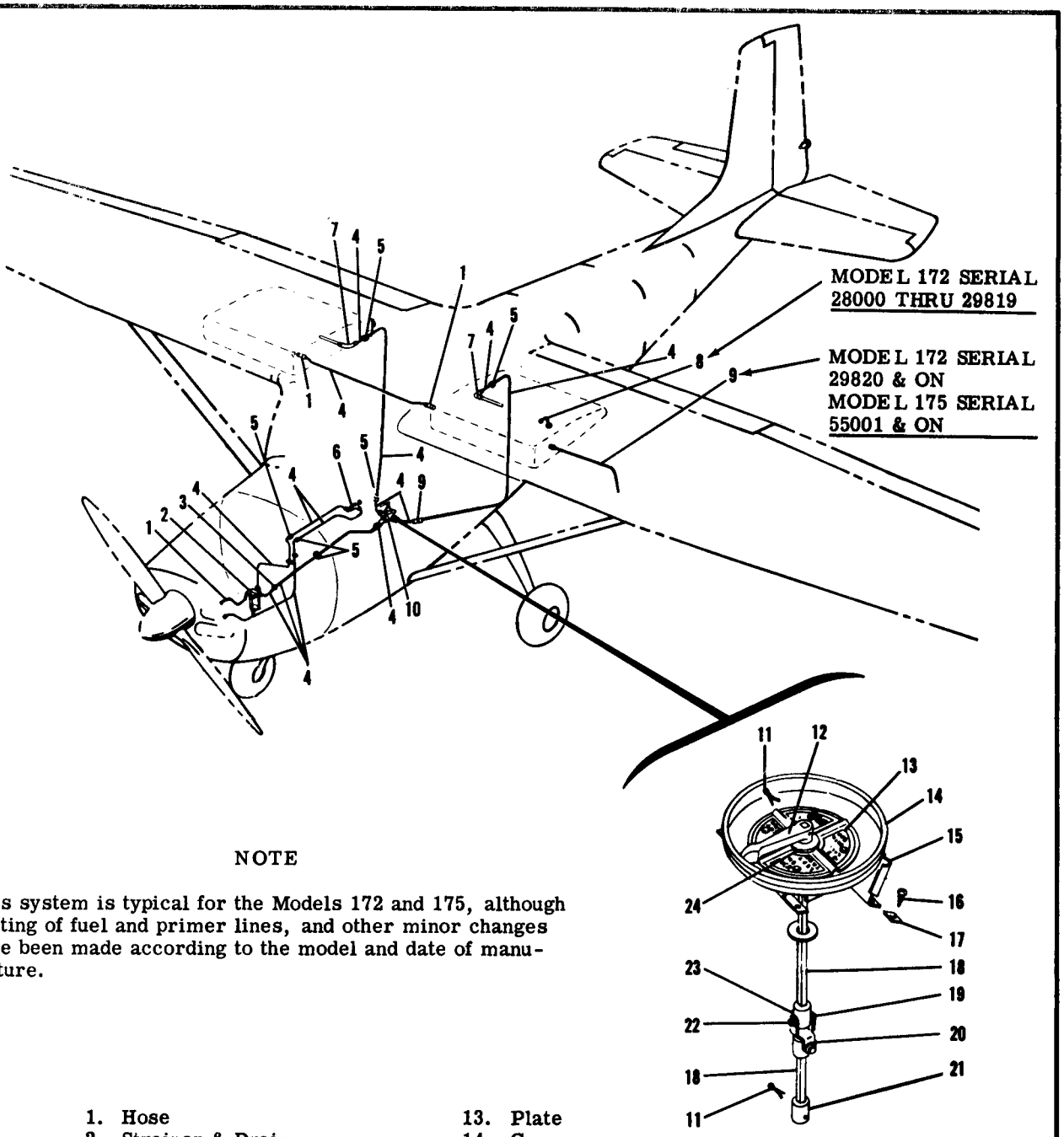

NOTE

This system is typical for the Models 172 and 175, although routing of fuel and primer lines, and other minor changes have been made according to the model and date of manufacture.

1. Hose
2. Strainer & Drain
3. Elbow
4. Fuel Line
5. Union
6. Primer
7. Finger Strainer
8. Vent
9. Vent Tube
10. Valve
11. Cotter Pin
12. Handle
13. Plate
14. Cup
15. Bracket
16. Screw
17. Nut
18. Shaft
19. Pivot
20. Spacer
21. Pivot
22. Pin
23. Washer
24. Guide

Figure 13-3. Fuel System - Model 172 and 175

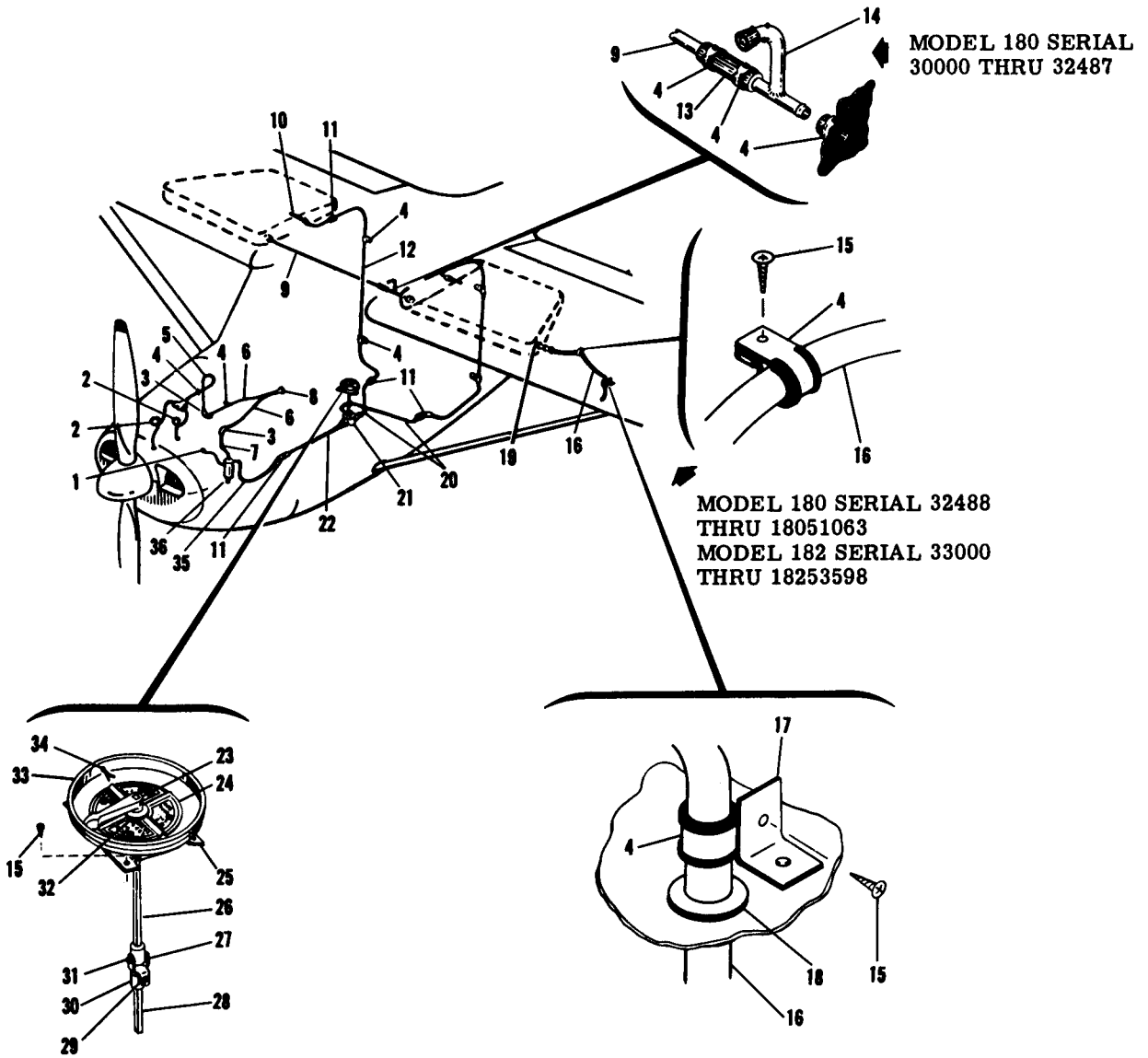

1. Fuel Line (Strainer to Engine)
2. Primer Line (Baffle to Engine)
3. Elbow
4. Clamp
5. Primer Line (Firewall to Baffle)
6. Primer Line (Primer to Firewall)
7. Primer Line (Strainer to Firewall)
8. Primer
9. Vent Line (Crossover Line)
10. Finger Strainer
11. Union
12. Fuel Line (Tank to Valve)
13. Hose
14. Vent
15. Screw
16. Vent Line
17. Angle
18. Grommet
19. Vent Valve
20. Fuel Line (Union to Valve)
21. Selector Valve
22. Fuel Line (Valve to Union)
23. Handle
24. Plate
25. Bracket
26. Upper Shaft
27. Pivot
28. Lower Shaft
29. Washer
30. Spacer
31. Pin
32. Guide
33. Cup
34. Cotter Pin
35. Fuel Line (Union to Strainer)
36. Fuel Strainer

Figure 13-4. Fuel System - Models 180 & 182 (Prior to 1962)

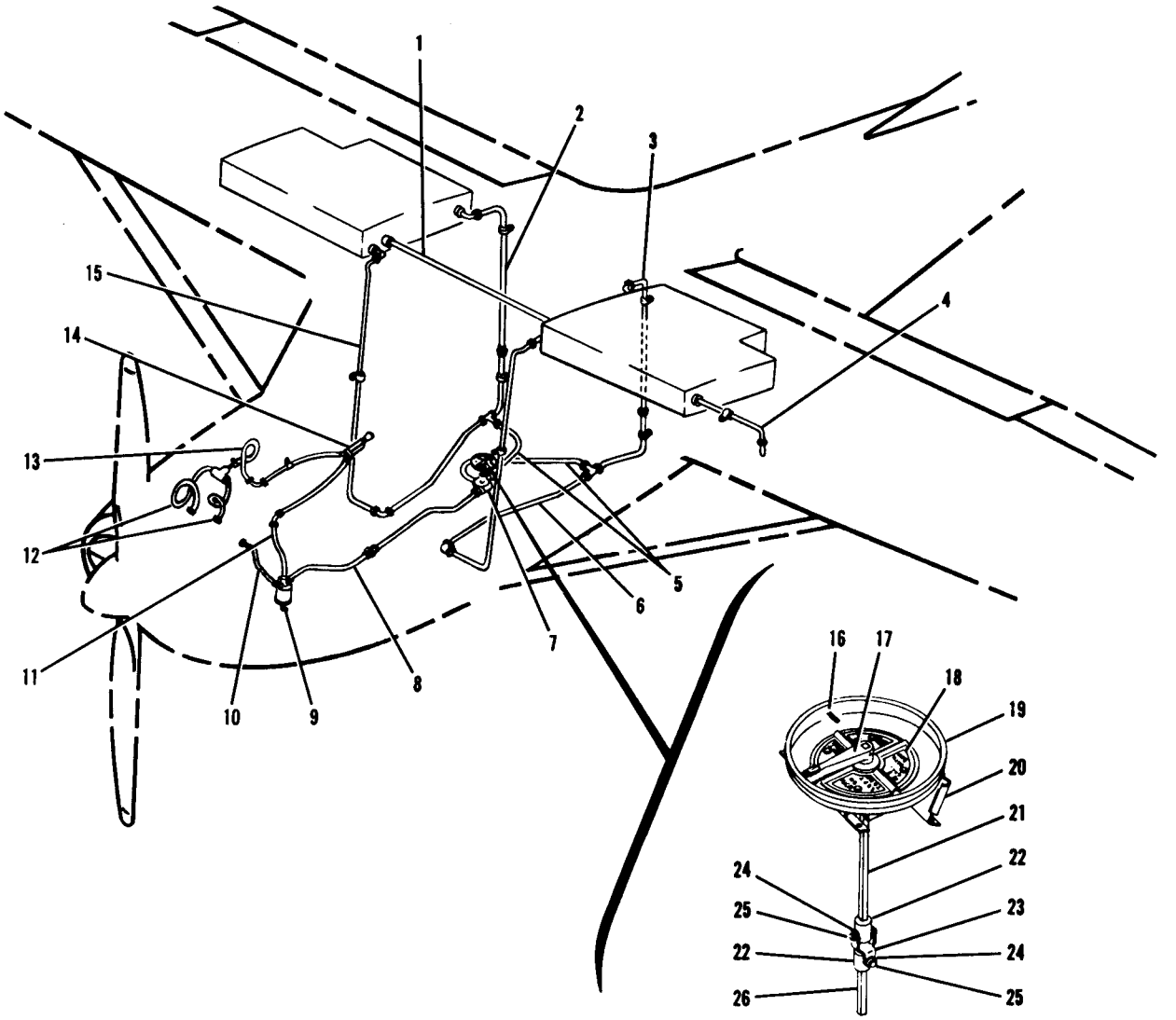

1. Vent Line (Crossover)
2. Aft Right Fuel Line
3. Aft Left Fuel Line
4. Fuel Tank Vent Line
5. Fuel Line (Tee to Valve)
6. Forward Left Fuel Line
7. Selector Valve
8. Fuel Line (Valve to Strainer)
9. Fuel Strainer
10. Fuel Hose (Strainer to Engine)
11. Primer Line (Strainer to Primer)
12. Primer Line (Tee to Engine)
13. Primer Line (Primer to Tee)
14. Primer
15. Forward Right Fuel Line
16. Roll Pin
17. Handle
18. Plate
19. Cup
20. Bracket
21. Upper Shaft
22. Pivot
23. Spacer
24. Washer
25. Pin
26. Lower Shaft

Figure 13-4A. Fuel System - Model 180 (1962 & on)

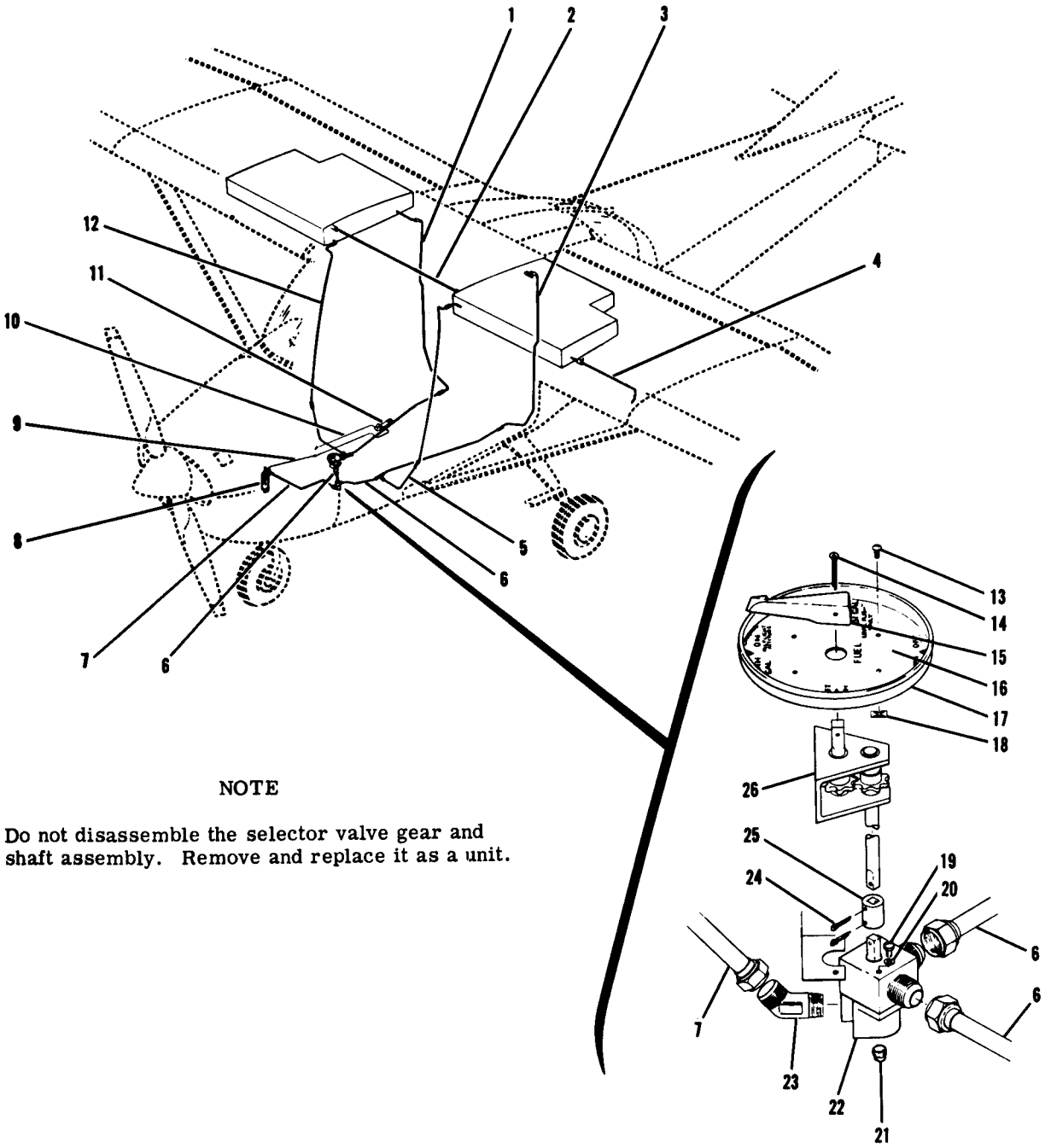

NOTE

Do not disassemble the selector valve gear and shaft assembly. Remove and replace it as a unit.

1. Aft Right Fuel Line
2. Vent Line (Crossover)
3. Aft Left Fuel Line
4. Fuel Tank Vent Line
5. Forward Left Fuel Line
6. Fuel Line (Tee to Valve)
7. Fuel Line (Valve to Strainer)
8. Fuel Strainer
9. Primer Line (Strainer to Primer)
10. Primer Line (Primer to Engine)
11. Primer
12. Forward Right Fuel Line
13. Screw
14. Cotter Pin
15. Handle
16. Placard
17. Cup
18. Nut
19. Screw
20. Washer
21. Plug
22. Selector Valve
23. Elbow
24. Cotter Pin
25. Coupling
26. Gear and Shaft Assembly

Figure 13-4B. Fuel System - Model 182 (1962 & on)

13-4. FUEL CELL REPLACEMENT -180, 182 & 185

NOTE

These aircraft employ rubberized, bladder-type fuel cells, one of which is located in the inboard bay of each wing panel. The cells are secured by snap fasteners to prevent collapse of the flexible cells. The following general precautions stipulated by the U. S. Rubber Company should be closely observed:

1. Store cells in original shipping containers at room temperature and with no more than normal humidity.
2. Avoid use of sharp-pointed tools when working with cells to eliminate puncture and abrasion.
3. Before installation, clean cell compartment of all filings, trimmings, loose rivets and parts which might damage cell. Round off any metal corners in contact with cells and tape over all sharp edges and rough rivets.
4. Be sure cell is warm enough to be flexible during installation.
5. Assemble sealing and compression surfaces dry; no sealing paste is used.
6. When fastening or unfastening snap fasteners, tilt the fastener to one side to avoid straining cell material.
7. Drain fuel and flush the cell with light engine oil 24 hours before the cell is removed or deformed in any way.

a. Remove wing root fairings and fuel filler door assembly. Disconnect fuel lines at wing roots by removing hose clamps and working the lines out of the cell.
b. With direct-reading fuel quantity gage, loosen wing root upholstery around gage neck. With electrical gage unit, detach electrical lead.
c. Remove screws attaching fuel quantity gage, then carefully work gage free.
d. Remove fuel sump drain plug; then remove screws securing drain adapter to the wing.
e. Disconnect fuel vent lines and work out of fuel cell.
f. Remove screws around edge of filler neck adapter and remove all filler neck parts.
g. Working through filler neck opening, ease the snap fasteners loose from their fastenings.
h. Collapse and roll up the cell carefully, then work it out of the fuel cell bay through the filler opening.
i. Remove the clamp attaching the fuel sump drain adapter to the cell and remove the adapter.
j. Before installing a cell, make a thorough check of the fuel cell bay to make sure it is free of filings, loose rivets and parts. Tape over any rough edges which might puncture or abrade the cell. Install the fuel drain sump adapter to the cell before installation, then reverse the procedures enumerated above for reinstallation.

NOTE

Latest recommendation for lubrication and sealing fuel system fittings is MIL-T-5544 graphite-petrolatum (or equivalent). Apply to male threads only, omitting the first two threads.

13-5. PRESERVATION OF FUEL CELLS.

NOTE

The following is reprinted from U. S. Rubber Company directives.

"When synthetic rubber fuel cells are placed in service, the gasoline has a tendency to extract the plasticizer from the inner liner of the cell. This extraction of plasticizer is not detrimental as long as gasoline remains in the fuel cells, in as much as the gasoline itself will act as a suitable plasticizer. When the gasoline is drained from the fuel cell, the plasticizing effect of the gasoline is lost and the inner liner of the cell begins to dry out. Subsequent cracking or checking will occur. This cracking or checking may penetrate through the inner liner, permitting gasoline to diffuse through wall of the cell after the cell has been refueled. To prevent this failure, a thin coating of light engine oil should be applied to the inner liner of all serviceable fuel cells, which have contained gasoline, when it is evident that the cells will remain without fuel for more than ten days, whether installed in airplanes or in storage. The oil will act as a temporary plasticizer and will prevent the inner liner from drying out and cracking. If it becomes necessary to return the cell to the contractor or the vendor for testing or repair, do not allow quantities of oil to be puddled in the cell as it will make handling and repair much more difficult. Cells should be repacked as similar to the original factory pack as possible."

13-6. FUEL CELL REPAIRS.

CAUTION

No repairs are to be made on the radius of a cell in the fitting area of a cell. Cells with such damage are to be returned to the factory for repairs. No damage areas such as cuts and tears larger than one inch are to be repaired in the field.

a. Outside of cell.
1. Use a piece of synthetic rubber coated fabric (U. S. Rubber 5200 outside repair material) large enough to cover damage at least two inches from cut in any direction. Buff this material lightly and thoroughly with garnet paper and wash with methyl ethyl ketone (U. S. Rubber Co. 3339 solution) to remove buffing dust.
2. Cement buffed side of patch with two coats of U. S. Rubber Co. 3230 cement or Minnesota Mining Co. EC-678. Allow each coat to dry 10-15 minutes.
3. Buff cell area to be patched lightly and thoroughly with garnet paper and wash with 3339 solution to remove buffing dust.
4. Cement buffed area with two coats of U. S.

Rubber 3230 or Minnesota Mining Co. EC-678 cement. Allow each coat to dry 10-15 minutes.

5. Freshen cemented area of patch and cemented area of cell with 3339 solution.

6. While still tacky, apply edge of patch to edge of cemented area on the cell. With a roller or blunt instrument, roll or press the patch to the cemented area and roll or press it down a half-inch to an inch across at a time so as not to trap air between patch and cell. Lay fifty-pound shot bag over patch, which is protected by piece of Holland cloth to prevent sticking. Weight should be removed after six hours.

7. Seal coat edge of patch one-half inch with one coat of U. S. Rubber 3230 or Minnesota Mining Co. EC-678 cement and allow the cement to dry thoroughly.

b. Inside of cell.

1. After the damaged area has been patched on the outside of the cell and the repair allowed to stand a minimum of six hours, the cell is ready for the patch on the inside of the cell.

2. Lightly and thoroughly buff a piece of cured U. S. Rubber 5200/5187 nylon sandwich material large enough to cover damage at least two inches from cut in any direction. Wash buffing dust off patch with methyl ethyl ketone solution (U. S. Rubber 3339).

3. Cement buffed side of patch with two coats of black rubber cement, U. S. Rubber 3230 or Minnesota Mining Co. EC-678, and allow each coat to dry 10-15 minutes.

4. Buff cell area to be patched lightly and thoroughly with fine sandpaper (#"0") and then wash off buffing dust with methyl ethyl ketone solution.

5. Coat buffed area with two coats of black rubber cement, U. S. Rubber 3230 or Minnesota Mining Co. EC-678, and allow each coat to dry 10-15 minutes.

6. Freshen cemented area of patch and cemented area of cell with methyl ethyl ketone solution (U. S. Rubber 3339).

7. While still tacky, apply edge of patch to edge of cemented area, centering patch over cut in cell. With a roller or blunt instrument, roll or press the patch to the cemented area on the cell. Hold part of patch off the cemented area and roll or press it down a half-inch to an inch across at a time to avoid trapping air between patch and cell. Apply fifty-pound shot bag to repaired area and do not disturb for six hours.

8. Seal coat patch and one-half inch edge of patch with two coats of U. S. Rubber 3230 or Minnesota Mining Co. EC-678 cement. Allow the first coat to dry one hour or more. Wipe patch and cemented area lightly with #10 oil, so that when the cell is in its original position the patch area will not stick to other areas of the cell.

c. Scuffed fabric.

1. Buff area surrounding scuffed fabric.

2. Wash buffing dust from area with 3339 solution.

3. Apply two coats of U. S. Rubber 3230 or Minnesota Mining Co. EC-678 cement to the buffed area, allowing ten minutes drying time between coats.

NOTE

A fuel cell repair kit, U.S. Rubber Kit No. RK-30S, contains all the necessary materials to repair a fuel cell. This kit is available from the Cessna Spare Parts Department.

SHOP NOTES:

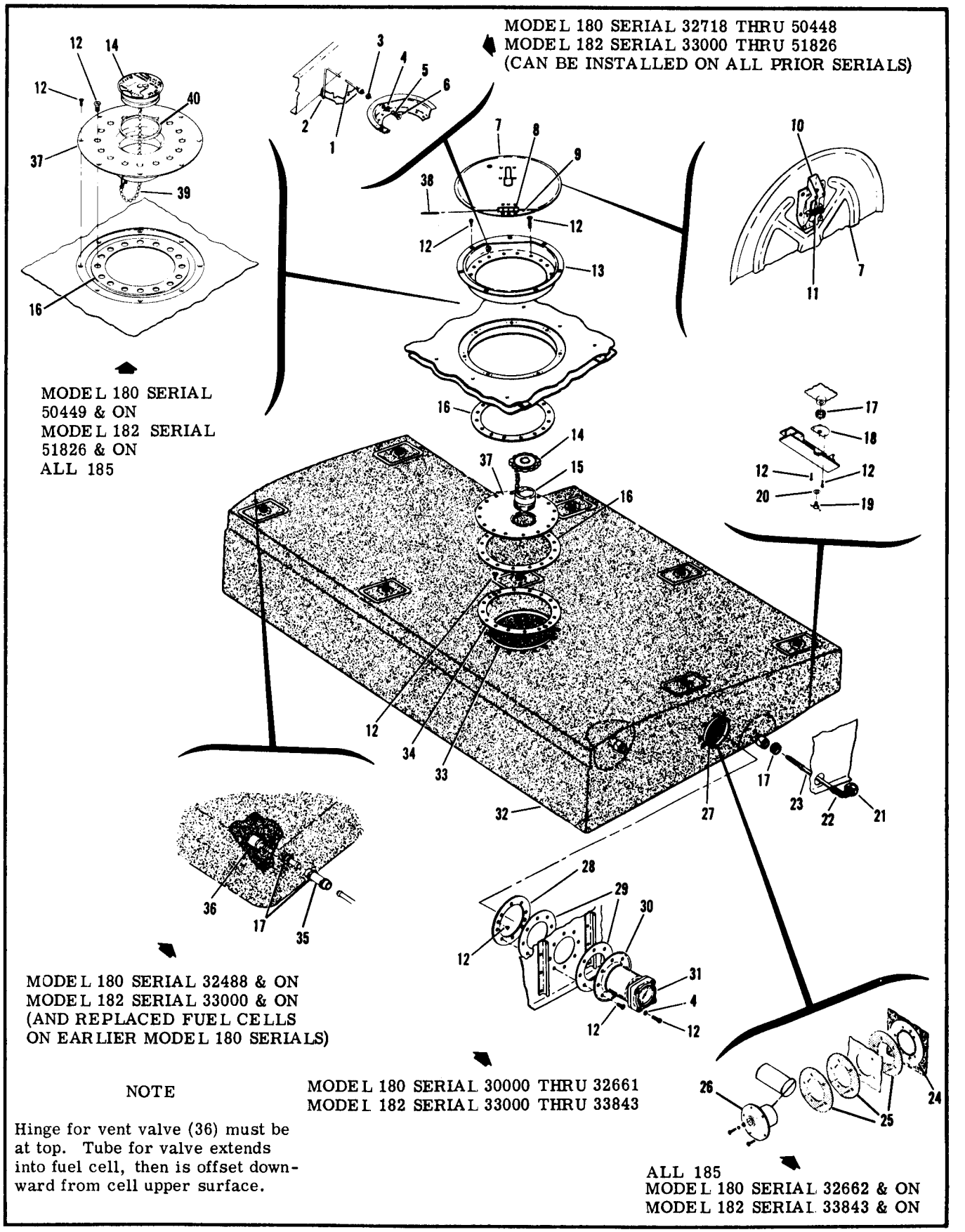

NOTE

Hinge for vent valve (36) must be at top. Tube for valve extends into fuel cell, then is offset downward from cell upper surface.

Figure 13-5. Fuel Cell Installation

13-7. FUEL TANK REPLACEMENT - 150, 172 AND 175.

NOTE

These airplanes are equipped with rigid, welded aluminum fuel tanks located in the inboard wing area. Since the installation is similar, the following general procedure may be followed for all subject airplanes.

a. Remove fuel sump drain plug and drain fuel.
b. Remove fuel tank cover by removing attaching screws.
c. Remove wing root fairings.
d. Disconnect all fuel and vent lines from fuel tank. Remove fittings as necessary for clearance when removing tank.
e. Loosen upholstery around direct-reading fuel gages and remove; disconnect electrical leads from fuel tanks with electrical fuel gage transmitters.
f. Disconnect straps securing fuel tank and remove the tank. Use care not to damage protruding fittings and hose connections when removing the tank.
g. Install tank by reversing above procedure.

NOTE

Latest recommendation for lubrication and sealing fuel system fittings is MIL-T-5544 graphite-petrolatum (or equivalent). Apply to male threads only, omitting the first two threads.

13-8. REPLACEMENT OF DIRECT-READING FUEL QUANTITY GAGE.
a. Drain fuel from tank.
b. Remove four screws and washers attaching gage to tank and pull gage from tank.
c. Install gage with a new gasket, using four screws and washers.

CAUTION

When replacing the quantity gage, take care to avoid bending the float arm. If the float arm is bent, the gage indication will be incorrect.

13-9. REPLACEMENT OF FUEL GAGE TRANSMITTERS.

NOTE

The resistor-type fuel gage transmitters are used in all aircraft which do not employ the direct-reading gages.

a. Drain fuel from tank or cell.
b. On 150, 172 and 175 series, remove skin plate over fuel tank to gain access to fuel gage transmitter. On the 180, 182 and 185, remove wing root fairings.
c. Disconnect electrical lead to unit.
d. On 150, 172 and 175, remove screws attaching transmitter to top of tank. On 180, 182 and 185 models, remove screws through unit and root rib.
e. Replace unit by reversing steps listed above. On rubberized fuel cells, no gasket paste should be used.
f. Fill tank; check for leaks and correct gage reading.

13-10. CHECKING FUEL VENT. Field experience has demonstrated that fuel vents can become plugged, with possible fuel starvation of the engine or collapse of fuel cells. Although the vent system varies in the different models, the following check is practical for aircraft covered by this manual.
a. Remove right hand fuel tank filler cap.
b. Force air through vent line (lower left wing). Providing system is free from obstructions, air will be emitted from the right tank.
c. Make certain vent is properly positioned behind the wing strut as shown in figure 13-6.

NOTE

Earlier airplanes which incorporate vent systems with vent openings on top of the wing, and the Model 185 which has a vent for each tank, will require forcing air through the vent and out the filler opening of each tank separately.

Any system found to be plugged should be corrected prior to returning the airplane to service.

References for Figure 13-5

1. Line
2. Grommet
3. Nut
4. Washer
5. O-ring
6. Union
7. Door
8. Hinge
9. Door Plate
10. Latch
11. Cotter Pin
12. Screw
13. Weld Assembly
14. Fuel Cap
15. Filler Neck
16. Gasket
17. Clamp
18. Adapter
19. Sump Drain Plug
20. Gasket
21. Nut
22. Protector
23. Finger Strainer
24. Outer Ring
25. Gasket
26. Fuel Transmitter
27. Inner Ring
28. Outer Ring
29. Gasket
30. Adapter
31. Fuel Gage
32. Fuel Cell
33. Inner Ring
34. Outer Ring
35. Hose
36. Valve
37. Adapter
38. Hinge Pin
39. Chain
40. O-ring

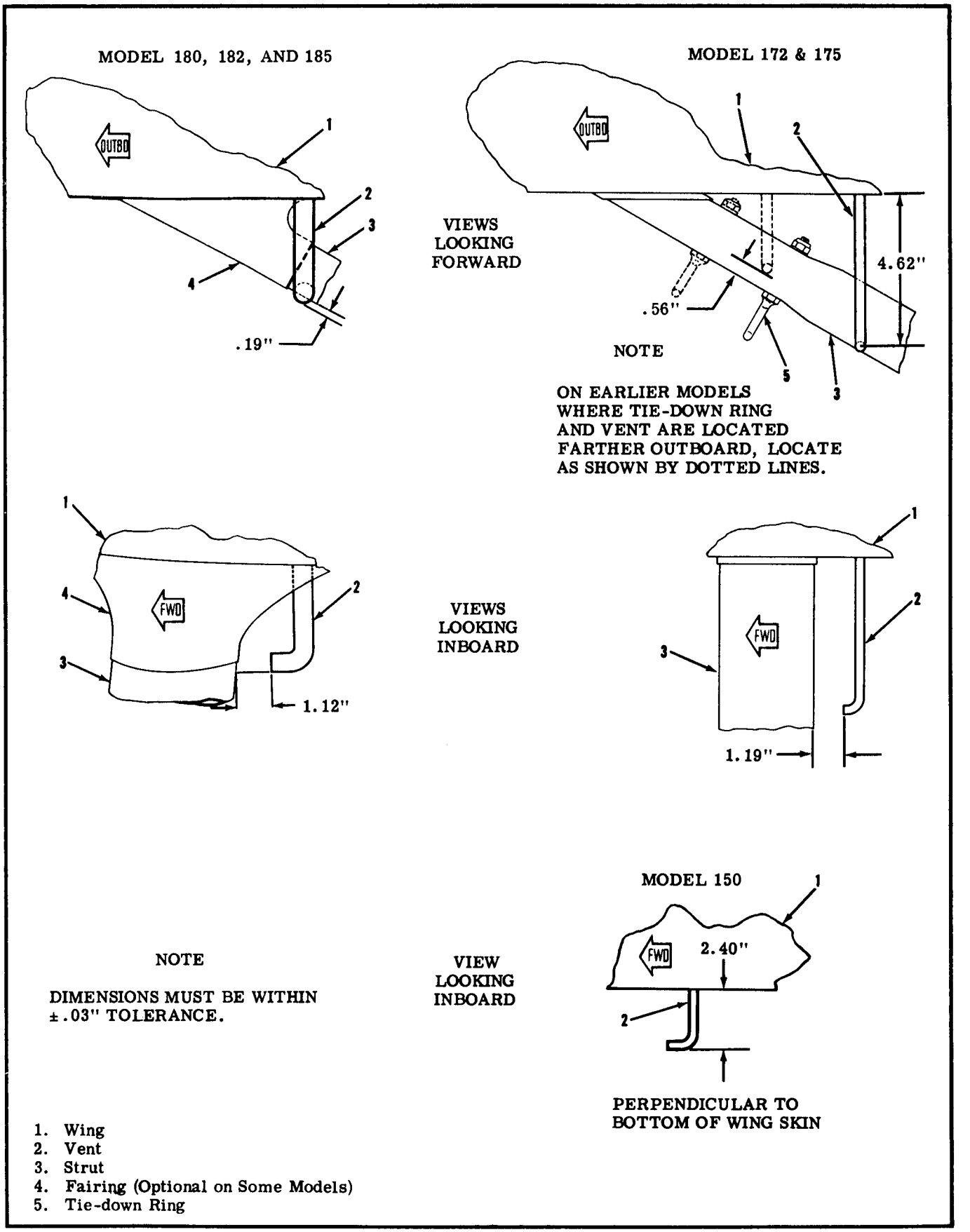

Figure 13-6. Fuel Vent Location

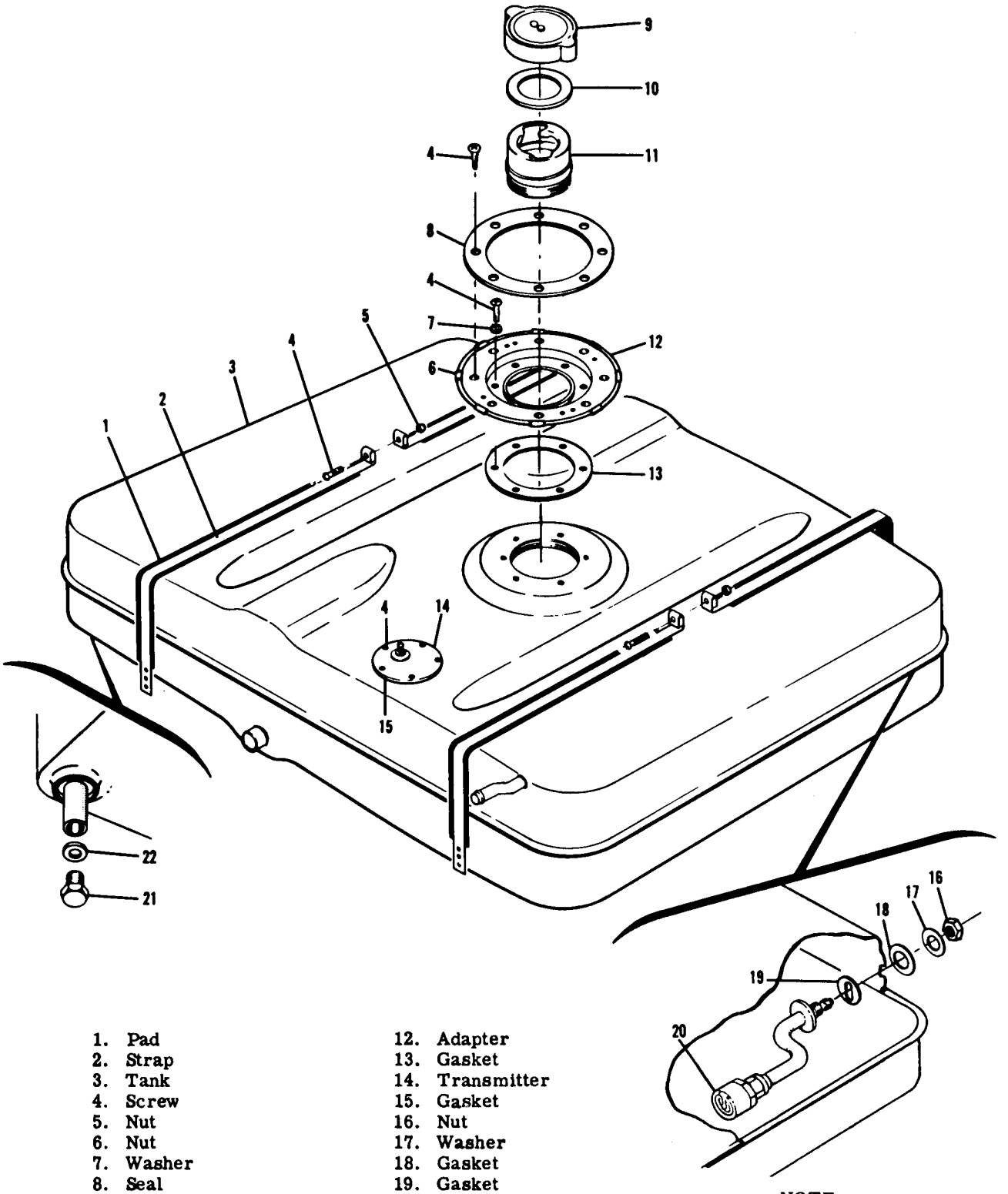

1. Pad
2. Strap
3. Tank
4. Screw
5. Nut
6. Nut
7. Washer
8. Seal
9. Cap
10. Gasket
11. Filler Neck
12. Adapter
13. Gasket
14. Transmitter
15. Gasket
16. Nut
17. Washer
18. Gasket
19. Gasket
20. Valve
21. Plug
22. Gasket

NOTE

Hinge for vent valve (20) must be at top. Tube for valve extends into fuel tank, then forward and slightly upward.

Figure 13-7. Fuel Tank - Model 150

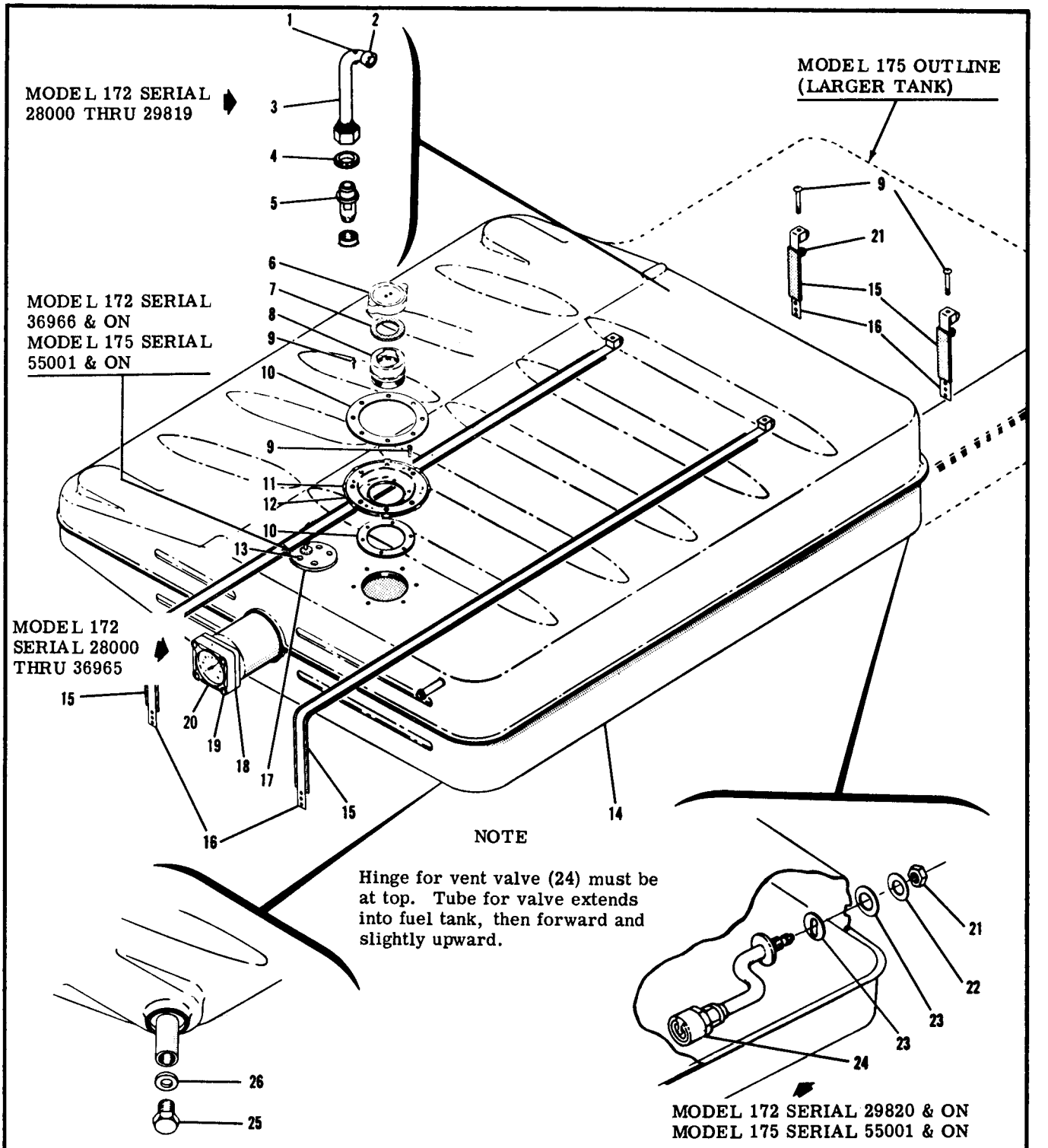

1. Boot
2. Ball
3. Vent
4. Grommet
5. Fitting
6. Cap
7. Gasket
8. Filler Neck
9. Screw
10. Gasket
11. Nut
12. Adapter
13. Screw
14. Fuel Tank
15. Pad
16. Strap
17. Gage Transmitter
18. Gasket
19. Screw
20. Fuel Gage
21. Nut
22. Washer
23. Gasket
24. Valve
25. Drain Plug
26. Gasket

Figure 13-8. Fuel Tank - Model 172 and 175

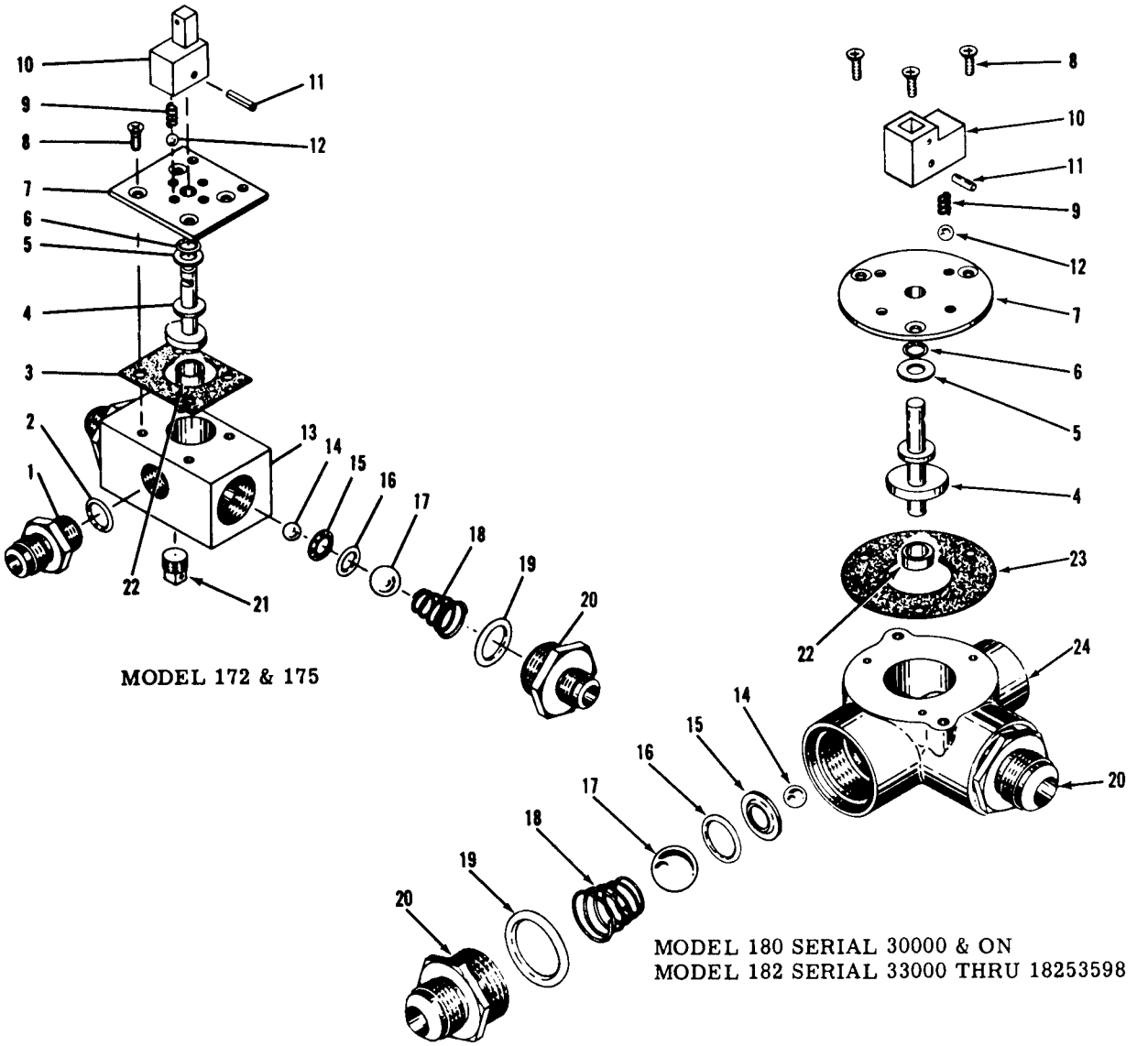

NOTE

Model 185 and Model 150 airplanes have a fuel shut-off valve instead of a selector valve.

1. Nipple
2. O-Ring
3. Gasket
4. Cam
5. Washer
6. O-Ring
7. Cover
8. Screw
9. Spring
10. Housing
11. Roll Pin
12. Ball
13. Body
14. Ball
15. Retainer
16. O-Ring
17. Ball
18. Spring
19. O-Ring
20. Nipple
21. Plug
22. Bushing
23. Gasket
24. Body

Figure 13-9. Fuel Selector Valve Details (Sheet 1)

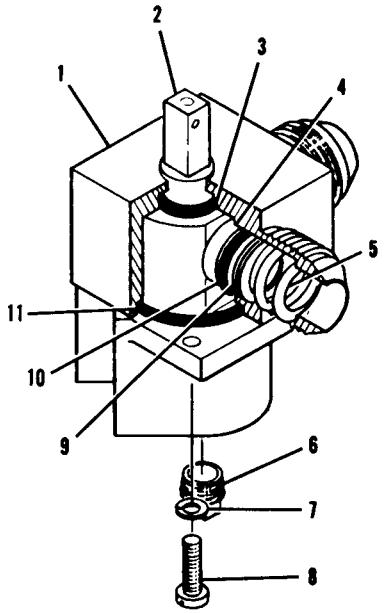

MODEL 182 SERIAL 18253599 & ON

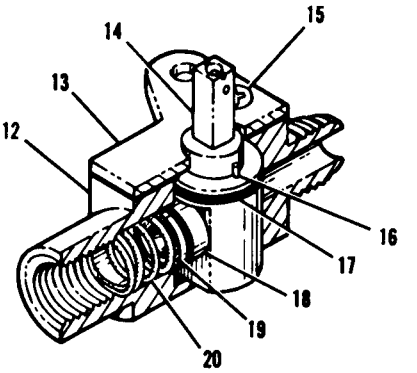

MODEL 185 SERIAL 185-0238 & ON

1. Body
2. Rotor
3. O-Ring
4. Seal
5. Spring
6. Plug
7. Lockwasher
8. Screw
9. Washer
10. O-Ring
11. O-Ring
12. Body
13. Cover
14. Rotor
15. Screw
16. Roll Pin
17. O-Ring
18. Seal
19. Washer
20. Spring

Figure 13-9. Fuel Selector Valve Details (Sheet 2)

SHOP NOTES:

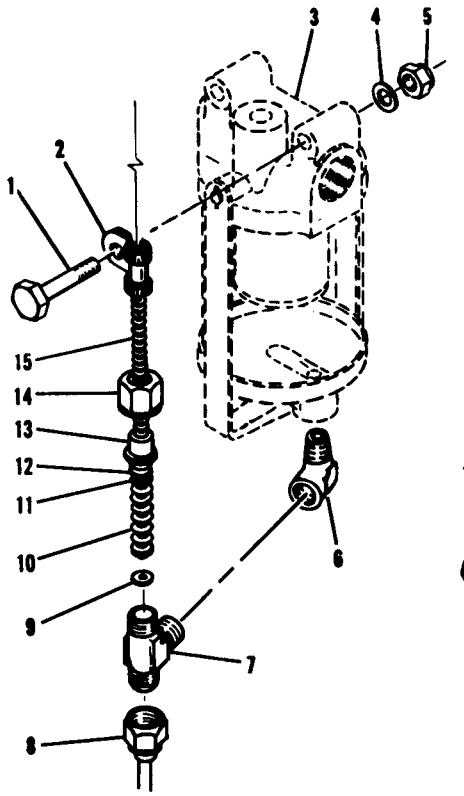

NOTE

Fuel strainers used on all models are similar, although methods of mounting vary among the different models and serials. Strainer drain controls, if used, are also mounted and clamped in various positions.

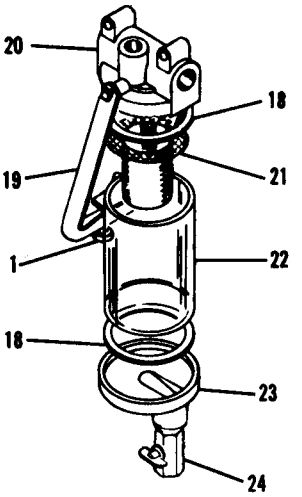

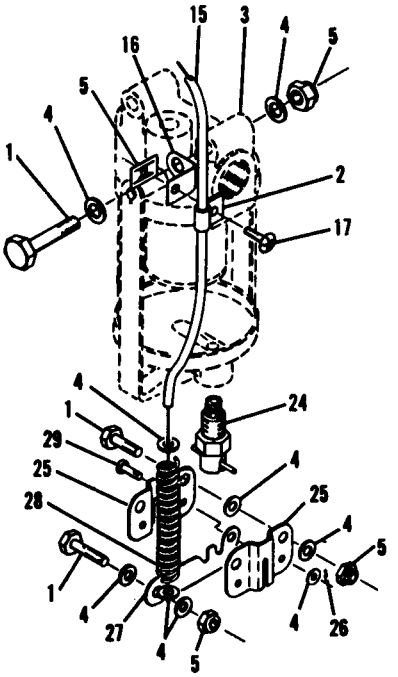

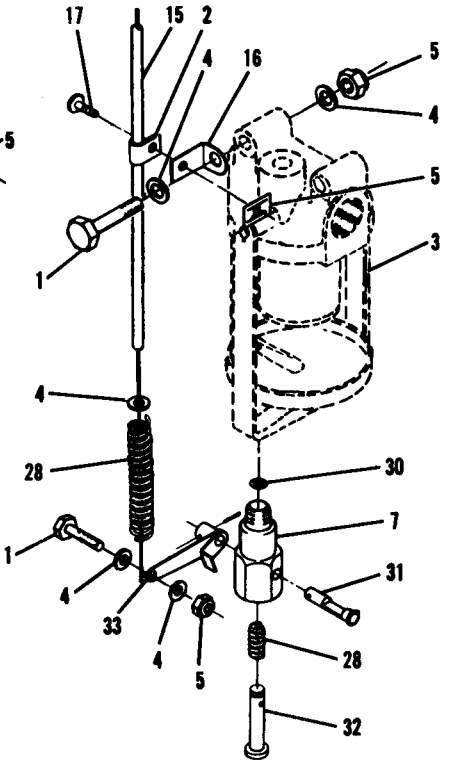

1. Bolt
2. Clamp
3. Fuel Strainer
4. Washer
5. Nut
6. Elbow
7. Valve Body
8. Drain Tube
9. Valve Seat
10. Spring
11. Washer
12. O-Ring
13. Sleeve
14. Nut
15. Control
16. Support
17. Screw
18. Gasket
19. Arm Assembly
20. Strainer Body
21. Filter Screen
22. Glass Bowl
23. Bottom Cap
24. Drain Valve
25. Clamp Half
26. Cotter Pin
27. Pawl
28. Spring
29. Clevis Pin
30. O-Ring
31. Shaft
32. Plunger
33. Lever

Figure 13-10. Fuel Strainers

13-11. FUEL SELECTOR VALVE REPLACEMENT.

NOTE

This paragraph applies to all models except the Models 150 and 185, and the Model 182 (1962 and on). Refer to succeeding paragraphs for selector valve or shut-off valve replacement on these models.

Latest recommendation for lubricating and sealing fuel system fittings is MIL-T-5544 graphite-petrolatum (or equivalent). Apply to male threads only, omitting the first two threads.

a. Drain all fuel from wing tanks. With selector valve in "BOTH ON" position, drain remaining fuel from lines at fuel strainer and fuel line drain plugs.
b. Remove tunnel cover rectangular access plate and access cover on bottom of fuselage adjacent to the valve.
c. Disconnect all fuel lines at the valve.
d. Disconnect handle shaft from the valve.
e. Remove screws or bolts securing the valve and remove the valve.
f. Install the valve by reversing the procedure listed above.

13-11A. FUEL SELECTOR VALVE REPLACEMENT (Model 182, 1962 and on).
a. Drain all fuel from wing tanks. With selector valve in "BOTH ON" position, drain remaining fuel from lines by removing drain plug from bottom of selector valve, above plug button.
b. Remove fuel selector valve handle and cup.
c. Remove console cover.
d. Unfasten and fold back carpet, then remove access plates at bottom of console and just aft of console.
e. Disconnect handle shaft from the valve.
f. Disconnect all fuel lines at the valve.
g. Remove screws securing the valve and remove the valve.
h. Install the valve by reversing the procedure listed above.

13-12. FUEL SHUT-OFF VALVE REPLACEMENT (Model 150).
a. Drain all fuel from wing tanks. With shut-off valve in "ON" position, drain remaining fuel from lines by removing fuel line drain plug.
b. Remove valve handle by removing attaching screw.
c. Unfasten and fold back carpet to the right of the valve, and remove access plate just forward of the right seat.
d. Disconnect all fuel lines from the valve.
e. Remove bolts securing valve and remove valve.
f. Install the valve by reversing the procedure listed above.

13-12A. FUEL SHUT-OFF VALVE REPLACEMENT (Model 185).
a. Drain all fuel from wing tanks. With shut-off valve in "ON" position, drain fuel lines and accumulator tank by removing drain plugs. Fuel lines from the wing tanks (1962 and on) may be drained by operating the quick-drain valves on the underside of the fuselage.
b. Remove shut-off valve handle by removing roll pin.
c. Remove tunnel cover.
d. Disconnect fuel line at rear of valve and two fuel lines from tee at front of valve.
e. Remove screws securing valve and remove valve.
f. Install the valve by reversing the procedure listed above.

13-13. SELECTOR VALVE AND SHUT-OFF VALVE REPAIR consists of the replacement of seals, springs, balls and other detail parts. Figure 13-9 shows the proper relationship of parts and will serve as a guide in reassembly.

13-14. FUEL STRAINER REPLACEMENT AND CLEANING. The fuel strainer is mounted on the firewall, in the engine compartment, and may be replaced by detaching all lines, disconnecting strainer drain control if used, and removing attaching bolts. Fuel strainer screens, gaskets, and bowl may be removed with the strainer left in place. The screens may be cleaned of sediment with compressed air after they have been removed. Defective filter screens should be replaced and gaskets should be renewed during reassembly of the strainer.

13-15. FUEL STRAINER DRAIN. (See figure 13-10.) A drain valve is installed in the bottom of each strainer. On some models a fuel strainer drain control, operated from the cabin, is installed. The control is a flexible control fastened to an arm which operates the drain valve. On one type of valve the control is attached directly to the valve itself, which resembles a tee fitting. Use the following procedure for disassembly and reassembly of this type control and drain valve.

CAUTION

Use care not to bend the control or damage parts during disassembly or reassembly.

a. Remove clamp (2).
b. Unscrew nut (14) connecting the control to valve body (7) and pull the control out of the body.
c. To replace valve seat (9), remove the old seat with a hook and tap the new seat into position.
d. To replace O-ring (12), remove the old one and discard it. Place a smooth, thin-walled, well-greased tube over the spring and small washer (11) on the end of the control (greased tape may be used) and carefully slide the O-ring in position past the washer. Remove the tube or tape.
e. From the cabin, pull the control knob out only far enough to remove all slack between the parts at the lower end of the control. Maintaining this position of the control, align the O-ring with washer (11) and sleeve (13).
f. Insert the control into the valve body until it bottoms. Pull the control knob out until the lower end of the control can be pushed into the valve body far enough for the O-ring to slip past the chamfer

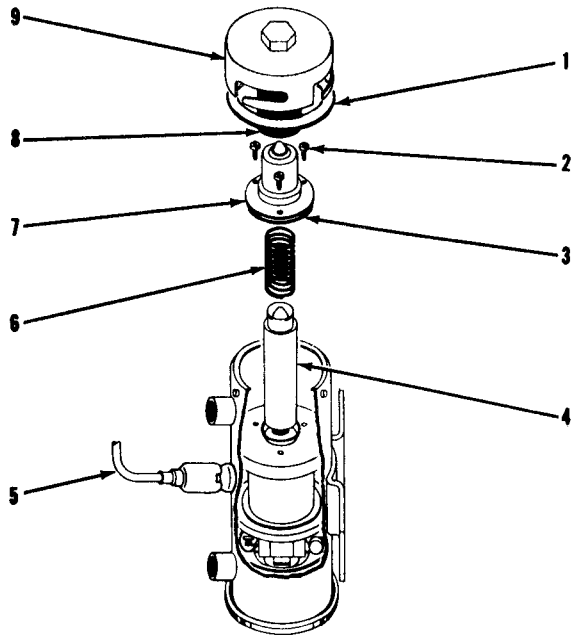

1. Gasket
2. Screw
3. Gasket
4. Plunger Assembly
5. Electrical Lead
6. Spring
7. Cup
8. Filter Screen
9. Cover

Figure 13-11. Electric Fuel Pumps - Model 185

on top of the valve body. After the O-ring is inside the valve body, pull the control knob all the way out and keep it out until nut (14) has been tightened. After tightening the nut, release the control knob.

g. Reinstall clamp (2).

13-16. PRIMER SYSTEMS are all of the manually operated type. Fuel for the plunger-type primer is supplied by a line from the fuel strainer. Operating the primer pumps fuel to the engine. Several methods are used to distribute this fuel. On some models, fuel is injected into the intake manifold riser. Some models use a tee fitting and prime two cylinders, others use a primer distributor and prime either five or six cylinders. Replacement of the primer is accomplished by disconnecting primer lines at the primer and removing it from the instrument panel. Before installing a primer, check it for correct pumping action and positive fuel shut-off in the "locked" position. Primer lines should be replaced when crushed or broken and should be properly clamped to prevent vibration fatigue and chafing.

13-17. ELECTRIC FUEL PUMPS (Model 185). Two electric fuel pumps, connected in series, are located in a blast-air-cooled shroud on the forward side of the firewall. The shroud isolates the pumps from engine heat and provides ventilation for the pumps. Placing the auxiliary fuel pump switch in "LOW PRIME" operates only one pump, providing sufficient fuel for priming and starting. The "HIGH" position, used for vapor purging and maintaining flight in the event of engine-driven fuel pump failure, operates both pumps and closes the vapor return line solenoid valve. Replacement of the electric pumps is accomplished by disconnecting fuel lines and electrical wiring, then removing the shroud and attaching bolts.

13-18. ELECTRIC FUEL PUMP FILTER SCREENS. The electric fuel pump filter screens may be cleaned as follows:

a. Remove the lower cowl.

b. Remove the top plate of the shroud for access.

c. Use a 5/8" box end wrench or socket to unlock the pump cover at the top of the pump. Lift the cover straight up and remove the screen. Examine the screen carefully, wash in solvent to dislodge foreign particles and reinstall. Using a new cover gasket, reinstall the cover.

d. Test operate to check for proper operation, then replace the plate at the top of the shroud and install the lower cowl.

This page intentionally left blank.

SECTION 14

PROPELLERS

(SEE SECTION 14A FOR HARTZELL PROPELLERS—MODEL 182, 1962 AND ON)

TABLE OF CONTENTS

	Page
PROPELLERS	14-1
Repair	14-1
FIXED-PITCH PROPELLERS	14-2
Removal	14-2
Installation	14-2
Repair	14-2
HARTZELL PROPELLER	14-5
Trouble Shooting	14-5
Removal	14-7
Installation	14-7
McCAULEY PROPELLER	14-9
Trouble Shooting	14-9
Removal	14-12
Cleaning of Propeller Hub	14-12
Installation of Propeller	14-12
PROPELLER GOVERNOR	14-12
Trouble Shooting	14-12
Removal	14-12
Installation	14-14
Checking Governor Plug Locations	14-14
High RPM Stop Adjustment	14-14
Rigging Propeller Governor Control	14-14

NOTE

Civil Air Regulations define major and minor repairs and alterations and who may accomplish them, and they furnish information on limits, tolerances, and workmanship. This section may be used as a guide, but the Civil Air Regulations and the propeller manufacturer's instructions must be observed.

14-1. PROPELLERS.

14-2. All-metal, fixed pitch propellers are used on the Models 150, 172 and 175 (prior to 1962). Models 180, 182, 185 and 175 (1962 and on) are equipped with all-metal, constant-speed, governor-regulated propellers.

14-3. REPAIR of metal propellers first involves evaluating the damage and determining whether the repair will be a major or minor one and, in accordance with Civil Aeronautics Manual 18 (CAM 18), who is permitted to accomplish the repair.

a. General Repair Considerations:

Under no circumstances are the raised edges of defects to be corrected by peening. No welding, soldering or compounds of any nature are to be used to fill or correct defects. All repair is to be in accordance with standard approved and accepted practice.

More than one defect on blade is not cause for considering blade not airworthy if repair is within indicated limits. A reasonable number of repairs per blade is permissible if their location with respect to each other is not such as to form a continuous line that may materially weaken blade. Any transverse crack shall be cause for considering blade not airworthy.

Repair necessitating the removal of an appreciable amount of metal shall be reason to check horizontal and vertical balance.

The repair of defects is permissible providing the treatment does not materially weaken the blade, reduce its weight, or impair its performance.

b. Defects on Thrust Face or Camber Side:

Repair by removal of metal to form shallow, large radius, round bottomed depressions. Periodic inspection during repair should be made to avoid removal of excessive amounts of metal. All raised edges should be carefully smoothed out to reduce the area of the defect and the amount of metal to be removed. Repair with suitable fine cut files and coarse grain emery cloth and smooth all edges and surfaces with fine grain emery cloth. Any blade repair on these surfaces which necessitates a depression that exceeds the manufacturer's tolerances or those listed in CAM 18 shall be cause for considering blade not airworthy.

c. Defects on Leading and Trailing Edge:

Repair defects as outlined in "b" above with suitable half round file and emery cloth. Carefully smooth all edges of repaired defect. Any

blade repair on leading and trailing edges which necessitates metal removal that exceeds the manufacturer's tolerances or those listed in CAM 18 shall be cause for considering blade not airworthy.

Blades that have leading or trailing edges pitted from normal wear may be reworked by removing sufficient metal to eliminate the pitting. Start well back from the edge and work over the edge in such a manner that the contour of the blade remains substantially the same. Avoid abrupt section changes and blunt edges. Permissible reductions in blade thickness and width, listed in the manufacturer's publications or CAM 18, must be observed.

d. Tip Damage:

Damage on blade tips may be removed in accordance with "b" and "c" listed above, as long as metal removal is within the tolerances specified. Damage which cannot be repaired by local removing of metal may be repaired by removing metal so as to shorten blades, although shortening blades is a propeller major repair. Any shortening of one blade requires an identical shortening of the other one, and any change in tip plan form or contour of one blade requires an identical change on the other one. Limitations concerning shortening of blades are specified in the manufacturer's publications or CAM 18.

e. Refinishing:

Prior to corrosion protection treatments, all repair areas should be smoothly polished out and blended in to finish repair and improve appearance. Wherever possible, all repaired blades should be anodized in a sulfuric acid anodize bath. The blades must be anodized with loose blade retention hardware on shank end; therefore, the blade must be supported vertically with steel hardware out of the solution and suitably protected to be unaffected by fumes. The same holds true for caustic baths

Where anodizing is not readily available, local repaired or inspected areas may be treated by other approved methods for corrosion protection; so-called chromodizing, alodine solution, painting, etc. It is doubtful that the finish of these treatments, other than sulfuric acid anodize, will blend in with regards to appearance. If desired, both camber and thrust face sides may be painted with zinc chromate primer and black lacquer to improve appearance. The thrust face side should always be painted.

14-4. FIXED-PITCH PROPELLERS.

14-5. REMOVAL.

a. Remove the spinner.

b. Remove bolts and washers (and nuts on those propellers where the nuts are not attached to the crankshaft flange) securing propeller and pull propeller off crankshaft. Spinner bulkhead may be removed if desired.

14-6. INSTALLATION.

a. Clean mating surfaces of crankshaft and propeller hub, then position propeller on shaft and install attaching bolts, washers, and nuts (where removed). If spinner bulkhead was removed, place it in position before installing the propeller.

NOTE

See figure 14-2 for proper engagement of the crankshaft and propeller gears if the reduction gear housing was removed from the engine. On the Model 150, install the propeller to "trail" 30° after top center.

b. Torque propeller bolts carefully, safety as required, and install spinner.

14-7. REPAIR of fixed-pitch propellers is included in paragraph 14-3.

SHOP NOTES:

MODEL 150

Install propeller to "trail" top dead center 30°.

Torque propeller bolts to 300 lb in.

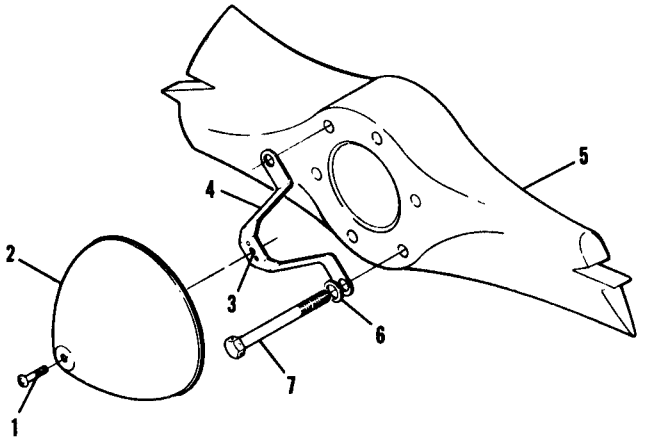

NOTE

A large spinner, similar to the one shown for the Models 172 and 175, may be used on the Model 150.

On models equipped with a spinner bulkhead which fits into the center hole of the propeller, overlap plastic electrician's tape around the drawn area of the bolkhead before installation. This will help minimize vibration.

Different spinner contour and material, and the use of spinner bulkheads forward and aft of the propeller are changes that have been made on later installations. SK 150-12, SK 172-17A, SK 172-18A, and SK 175-10 are Service Kits that are available for improvement of spinner installations for certain types and serials.

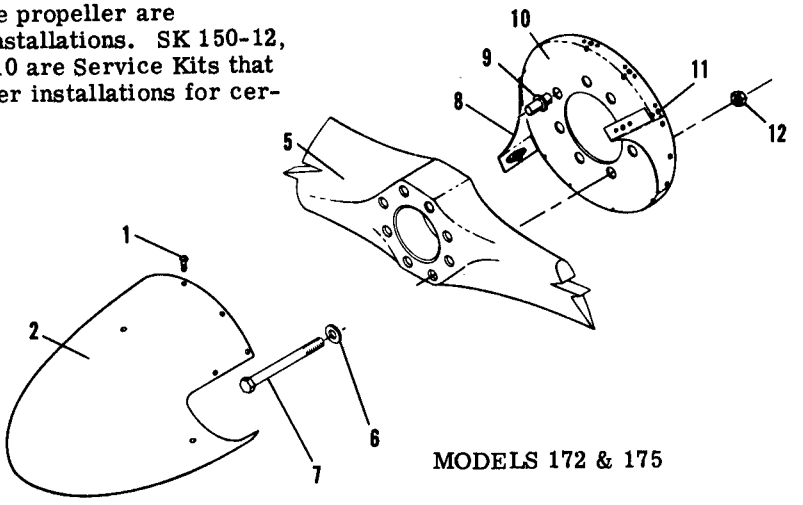

MODELS 172 & 175

Prior to serial 46755 (172), torque propeller bolts to 250 lb in. (Eight smaller bolts, no dowel pins).

Serials 46755 and on (172), and serials 55001 thru 17557002 (175), torque propeller bolts to 55-65 lb ft. (Six larger bolts, two dowel pins).

1. Screw
2. Spinner
3. Nut Plate
4. Bracket
5. Propeller
6. Washer
7. Bolt
8. Fillet
9. Dowel Pin
10. Spinner Bulkhead
11. Nut

Figure 14-1. Fixed-Pitch Propellers

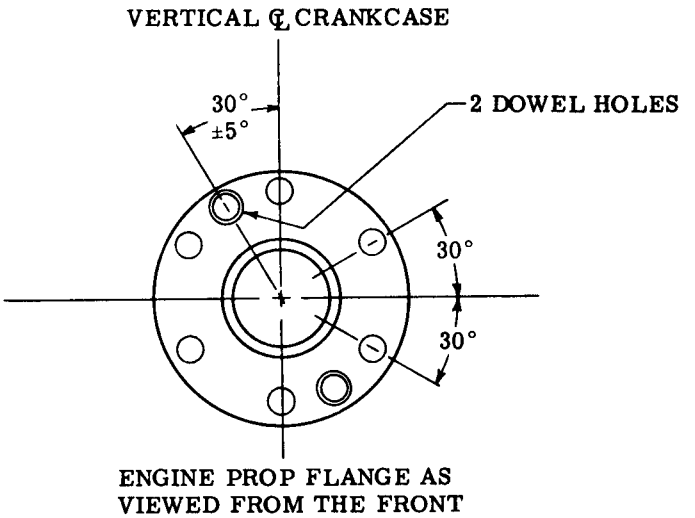

NOTE

If the reduction gear housing has been removed from the engine, install it as follows: Position prop shaft with dowel holes in the location shown, when No. 1 cylinder is on top dead center and on compression stroke. Change gear mating as required to position prop shaft as shown. Secure the reduction gear housing to the engine.

Figure 14-2. Reduction Gear Mating - Model 175

14-8. HARTZELL PROPELLER.

14-9. The Hartzell constant-speed propeller used on Cessna aircraft is a single-acting propeller in which oil pressure from the engine, boosted and regulated by a governor, is used to decrease blade pitch, and centrifugal force acting on counterweights is used to increase blade pitch. An exception to this is the Model HC-82XF-6 series propeller installed on a few early airplanes. The dash 6 propeller differs from the other Hartzell models in that it has no blade counterweights. It operates in the same manner as the McCauley propeller described in paragraph 14-13.

CAUTION

McCauley and Hartzell propellers require governors which "sense" differently, since boosted oil pressure increases blade pitch of McCauley propellers and decreases blade pitch of Hartzell propellers. Governors are discussed later in this section, beginning with paragraph 14-19.

14-10. TROUBLE SHOOTING.

PROBABLE CAUSE	ISOLATION PROCEDURE	REMEDY
FAILURE TO CHANGE PITCH.		
Control disconnected or broken.	Check visually.	Connect or replace control.
Governor not correct for propeller. "Sensing" wrong.	Check that governor is correctly set. See figure 14-6.	Install correct governor.
Defective governor.	See paragraph 14-21.	See paragraph 14-21.
Defective pitch changing mechanism or excessive blade friction.	Lubricate propeller and check manually.	Propeller repair or replacement is required.
FAILURE TO CHANGE PITCH FULLY.		
Improper rigging of governor control.	Check that arm on governor has full travel.	Rig correctly.
Defective governor.	See paragraph 14-21.	See paragraph 14-21.
SLUGGISH RESPONSE TO PROPELLER CONTROL.		
Excessive friction in pitch changing mechanism or excessive blade friction.	Lubricate propeller and check manually.	Propeller repair or replacement is required.
STATIC RPM TOO HIGH.		
Governor high rpm stop set too high.	See "Note" at end of this chart.	Rig correctly.
Defective governor.	See paragraph 14-21.	See paragraph 14-21.
Incorrect propeller or incorrect low pitch blade angle.	Check aircraft specifications.	Install correct propeller, with correct blade angle.
STATIC RPM TOO LOW.		
Governor high rpm stop set too low.	See "Note" at end of this chart.	Rig correctly.
Defective governor.	See paragraph 14-21.	See paragraph 14-21.
Incorrect propeller or incorrect low pitch blade angle.	Check aircraft specifications.	Install correct propeller, with correct blade angle.

PROBABLE CAUSE	ISOLATION PROCEDURE	REMEDY
ENGINE SPEED WILL NOT STABILIZE.		
Sludge in governor.	See paragraph 14-21.	See paragraph 14-21.
Air trapped in propeller actuating cylinder.	This condition may occur after the propeller has been reinstalled or has been idle for an extended period.	Trapped air should be purged by exercising the propeller several times prior to take-off after the propeller has been reinstalled or has been idle for an extended period.
Excessive friction in pitch changing mechanism or excessive blade friction.	Lubricate propeller and check manually.	Propeller repair or replacement is required.
Defective governor.	See paragraph 14-21.	See paragraph 14-21.
OIL LEAKAGE AT MOUNTING FLANGE.		
Damaged O-ring seal between engine and propeller.	Check visually for oil leakage.	Replace O-ring seal.
Foreign material between engine and propeller mounting flange or bolts not tight.	Check visually for oil leakage.	Clean propeller and engine flanges and tighten bolts properly.
GREASE LEAKAGE AT GREASE FITTING.		
Loose or defective grease fitting.	Check visually for grease leakage.	Tighten loose grease fitting; replace, if defective.
OIL OR GREASE LEAKAGE AT ANY OTHER PLACE.		
Defective seals, gaskets, threads, etc. or incorrect assembly.	Check visually for oil or grease leakage.	Propeller repair or replacement is required.

NOTE

It is possible for either the propeller low pitch (high rpm) stop or the governor high rpm stop to be the high rpm limiting factor. It is desirable for the governor stop to limit the high rpm at the maximum rated rpm for a particular airplane. Due to climatic conditions, field elevation, low pitch blade angle, and other considerations, an engine may not reach rated rpm on the ground. It may be necessary to readjust the governor stop after test flying to obtain maximum rated rpm when airborn.

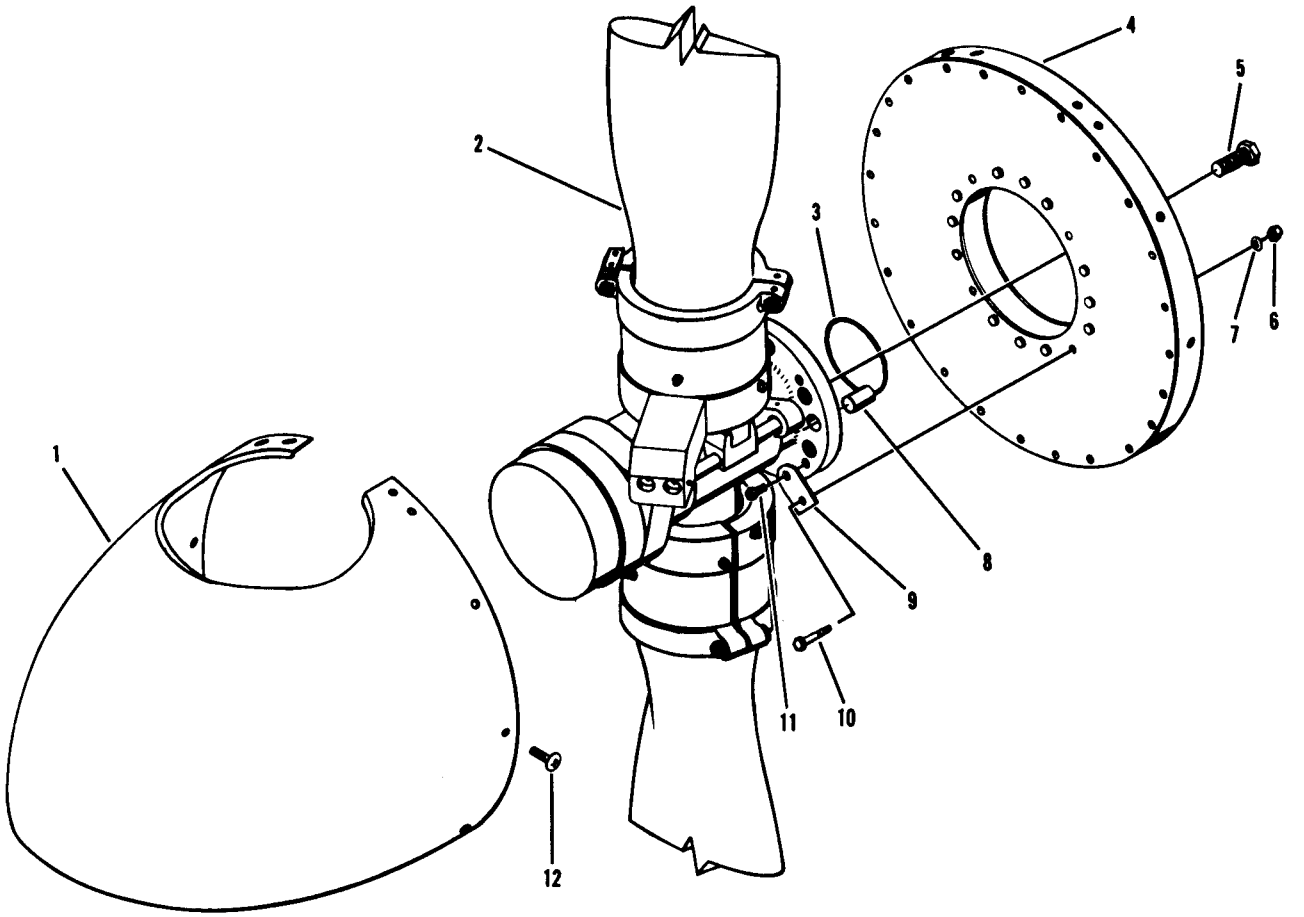

1. Propeller Spinner
2. Propeller
3. O-Ring
4. Spinner Bulkhead
5. Bolt
6. Nut
7. Washer
8. Dowel Pin
9. Lug
10. Bolt
11. Bolt
12. Screw

Figure 14-3. Typical Hartzell Propeller Installation

14-11. REMOVAL.

a. Remove screws securing spinner to spinner bulkhead and remove spinner.

b. On those propellers where the two dowel pins are accessible, use a brass punch to drive them from the propeller and engine flanges from front to rear. Use care not to damage propeller or engine flanges.

c. Remove propeller mounting bolts and pull propeller forward to remove from engine.

NOTE

As the propeller is separated from the engine, oil will drain from the propeller and engine cavities.

d. If desired, the spinner bulkhead can be removed from the propeller.

14-12. INSTALLATION.

a. Clean propeller and engine flanges. Remove any nicks, burrs, or sharp edges.

b. Assemble spinner bulkhead to propeller, positioning the bulkhead so propeller blades will emerge from the spinner with ample clearance. Safety the support lug screws as shown in figure 14-5.

c. Press dowel pins through holes in propeller flange so they extend slightly out beyond the mating surface, on those models where the dowel pins are accessible from the front.

NOTE

On some models, dowel pins are installed into "blind" holes in the aft side of the propeller. These must be in place before the propeller is installed.

d. Lightly lubricate a new O-ring and the crankshaft pilot and install the O-ring on the crankshaft pilot.

e. Align mounting holes and dowel pins with proper holes in crankshaft and slide propeller carefully over the crankshaft pilot.

CAUTION

Avoid scraping metal from bore of spinner bulkhead and wedging scrapings between engine flange and propeller. Trim the inside diameter of the bulkhead as necessary when installing a new spinner bulkhead.

f. Install propeller bolts through engine flange into tapped holes in propeller flange. Tighten bolts evenly, torque to 75 lb ft, and safety in pairs.

g. Using a brass punch, drive dowel pins flush with surface of hub flange, except on those models where they are in place prior to propeller installation.

h. Check all safeties, then install the spinner.

NOTE

If clearance between propeller blades and spinner is inadequate, the spinner may be shifted slightly by loosening the spinner bulkhead mounting lug screws, rotating the bulkhead, tightening the attaching screws and resafetying.

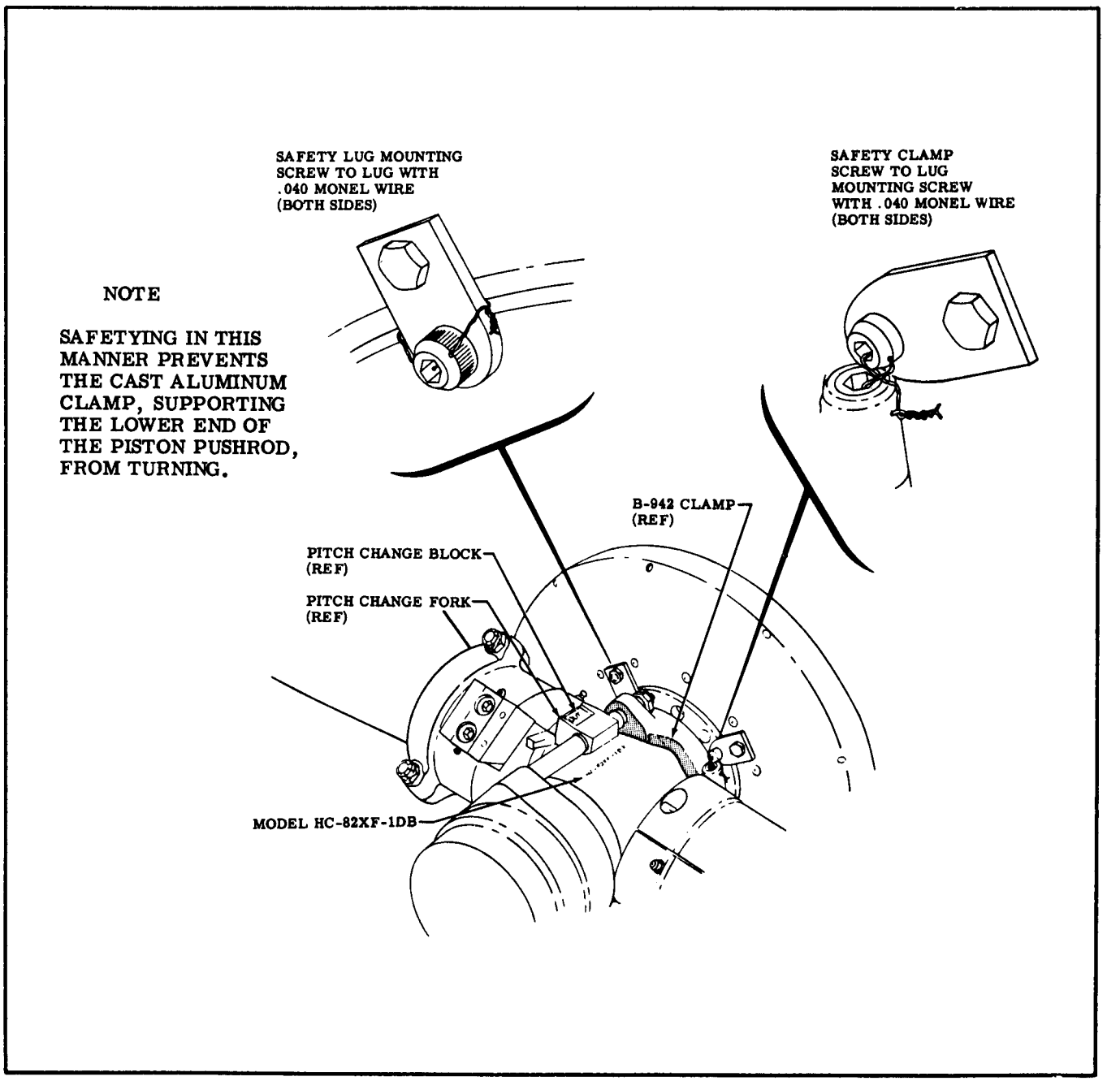

Figure 14-4. Safetying Spinner Lug Screws

14-13. McCAULEY PROPELLER.

14-13A. The McCauley constant-speed propeller used on Cessna aircraft is a single-acting propeller in which oil pressure from the engine, boosted and regulated by a governor, is used to increase blade pitch, and the natural, centrifugal twisting moment of the rotating blades, and the force of a spring, are used to decrease blade pitch.

CAUTION

McCauley and Hartzell propellers require governors which "sense" differently, since boosted oil pressure increases blade pitch of McCauley propellers and decreases blade pitch of Hartzell propellers. Governors are discussed later in this section, beginning with paragraph 14-19.

14-14. TROUBLE SHOOTING.

PROBABLE CAUSE	ISOLATION PROCEDURE	REMEDY
FAILURE TO CHANGE PITCH.		
Control disconnected or broken.	Check visually.	Connect or replace control.
Governor not correct for propeller. "Sensing" wrong.	Check that governor is correctly set. See figure 14-6.	Install correct governor.
Defective governor.	See paragraph 14-21.	See paragraph 14-21.
Defective pitch changing mechanism inside propeller or excessive blade friction.	Check manually.	Propeller repair or replacement is required.
FAILURE TO CHANGE PITCH FULLY.		
Improper rigging of governor control.	Check that arm on governor has full travel.	Rig correctly.
Defective governor.	See paragraph 14-21.	See paragraph 14-21.
SLUGGISH RESPONSE TO PROPELLER CONTROL.		
Excessive friction in pitch changing mechanism inside propeller or excessive blade friction.	Check manually.	Propeller repair or replacement is required.
STATIC RPM TOO HIGH.		
Governor high rpm stop set too high.	See "Note" at end of this chart.	Rig correctly.
Defective governor.	See paragraph 14-21.	See paragraph 14-21.
Incorrect propeller or incorrect low pitch blade angle.	Check aircraft specifications.	Install correct propeller, with correct blade angle.
STATIC RPM TOO LOW.		
Governor high rpm stop set too low.	See "Note" at end of this chart.	Rig correctly.
Defective governor.	See paragraph 14-21.	See paragraph 14-21.
Incorrect propeller or incorrect low pitch blade angle.	Check aircraft specifications.	Install correct propeller, with correct blade angle.
ENGINE SPEED WILL NOT STABILIZE.		
Sludge in governor.	See paragraph 14-21.	See paragraph 14-21.

PROBABLE CAUSE	ISOLATION PROCEDURE	REMEDY
ENGINE SPEED WILL NOT STABILIZE (Cont).		
Air trapped in propeller actuating cylinder.	This condition may occur after the propeller has been reinstalled, or has been idle for an extended period.	Trapped air should be purged by exercising the propeller several times prior to take-off after the propeller has been reinstalled or has been idle for an extended period.
Excessive friction in pitch changing mechanism inside propeller or excessive blade friction.	Check manually.	Propeller repair or replacement is required.
Defective governor.	See paragraph 14-21.	See paragraph 14-21.
OIL LEAKAGE AT MOUNTING FLANGE.		
Damaged O-ring seal between engine and propeller.	Check visually for oil leakage.	Replace O-ring seal.
Foreign material between engine and propeller mounting flange or nuts not tight.	Check visually for oil leakage.	Clean propeller and engine flanges and tighten nuts properly.
OIL LEAKAGE BETWEEN HUB AND CYLINDER.		
Defective gasket or screws not tight (on models where screws are external).	Check visually for oil leakage.	Replace gasket and tighten screws properly.
OIL LEAKAGE AT ANY OTHER PLACE.		
Defective seals, gaskets, threads, etc., or incorrect assembly.	Check visually for oil leakage.	Propeller repair or replacement is required.

NOTE

It is possible for either the propeller low pitch (high rpm) stop or the governor high rpm stop to be the high rpm limiting factor. It is desirable for the governor stop to limit the high rpm at the maximum rated rpm for a particular airplane. Due to climatic conditions, field elevation, low pitch blade angle, and other considerations, an engine may not reach rated rpm on the ground. It may be necessary to readjust the governor stop after test flying to obtain maximum rated rpm when airborn.

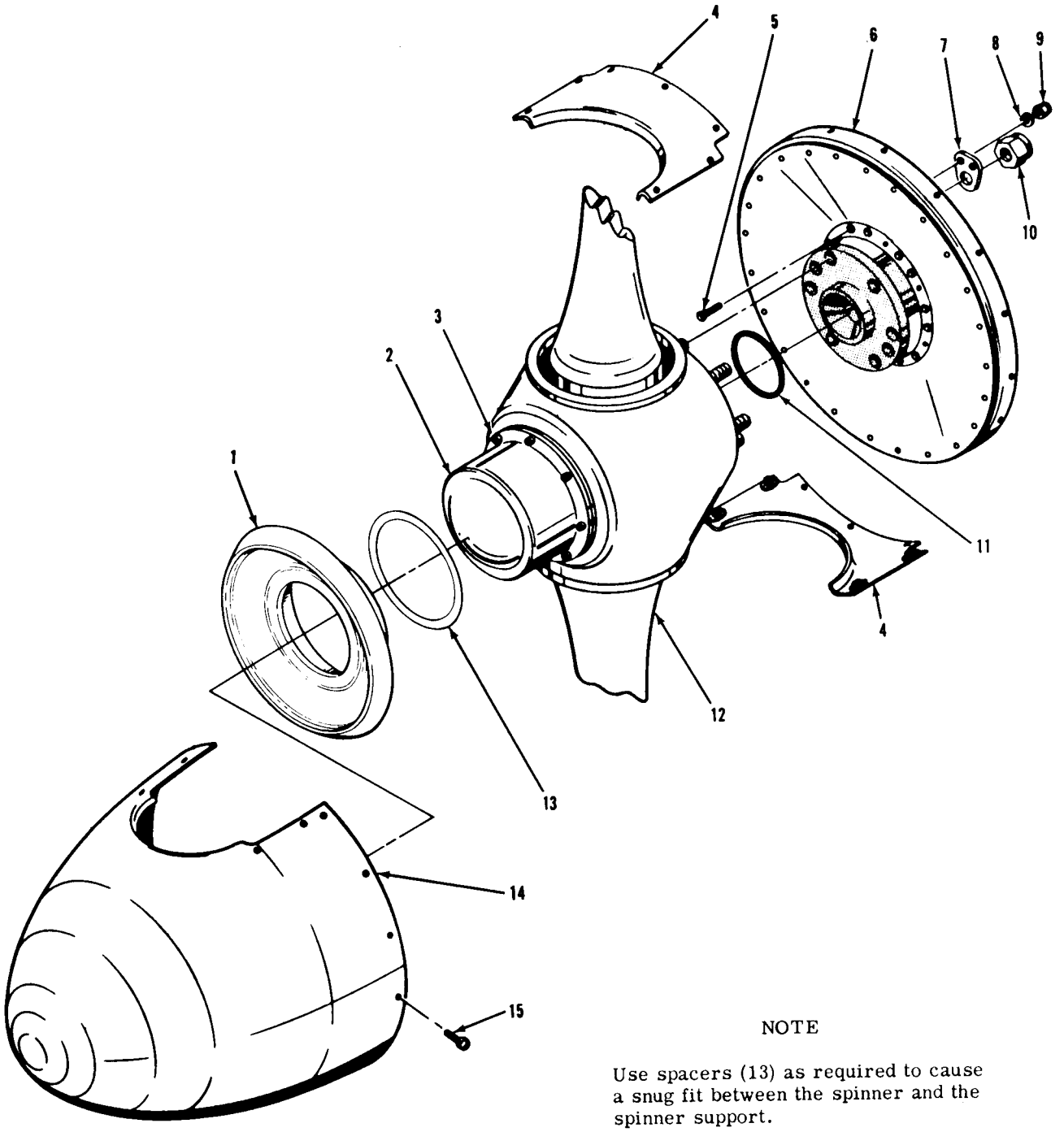

NOTE

Use spacers (13) as required to cause a snug fit between the spinner and the spinner support.

1. Spinner Support
2. Cylinder
3. Screw
4. Fillet
5. Screw
6. Spinner Bulkhead
7. Lug
8. Washer
9. Nut
10. Nut
11. O-Ring
12. Propeller
13. Spacer
14. Propeller Spinner
15. Screw

Figure 14-5. Typical McCauley Propeller Installation

14-15. REMOVAL.

a. Remove screws securing spinner to spinner bulkhead and remove spinner.

b. Remove spinner support from front of propeller (1962 and on).

c. Loosen nuts attaching propeller about 1/4" and pull propeller forward until halted by nuts.

NOTE

As the propeller is separated from the engine, oil will drain from the propeller and engine cavities.

d. Remove attaching nuts and pull propeller forward to remove from engine.

e. If desired, the spinner bulkhead can be removed from the engine by removing attaching lugs.

14-16. CLEANING OF PROPELLER HUB.

NOTE

This procedure applies only to McCauley propellers where the cylinder at the front of the propeller is attached with screws which are visible, and does not apply to propellers where the cylinder head is not an integral part of the cylinder. Disassembly beyond the following procedure is not recommended except by properly authorized propeller shops.

a. Remove propeller spinner. Remove spinner support from cylinder (1962 and on).

b. Remove screws securing cylinder to hub and remove cylinder.

c. Use a solution of one part light engine oil and two parts solvent to clean exposed parts and interior of cylinder. Dry gently with compressed air, then use clean engine oil to lubricate parts lightly before assembly.

d. Install new O-rings and gaskets at each cleaning of propeller hub.

e. Reassemble cylinder to hub.

f. Position spinner support on front of propeller (1962 and on). Reinstall spinner.

14-17. INSTALLATION.

a. If spinner bulkhead was removed, slide it over the crankshaft flange, position it so the propeller blades will emerge from the spinner with ample clearance, and install the spinner bulkhead attaching lugs.

CAUTION

Avoid scraping metal from bore of spinner bulkhead and wedging scrapings between engine flange and propeller. Trim the inside diameter of the bulkhead as necessary when installing a new spinner bulkhead.

b. Clean propeller hub cavity, mating surfaces, and crankshaft.

c. Lightly lubricate a new O-ring and the crankshaft pilot and install the O-ring in the propeller hub.

d. Align mounting bolts and dowel pins with proper holes in crankshaft and slide propeller carefully over the crankshaft pilot until hub is approximately 1/4" from flange.

e. Install all nuts on propeller bolts, work propeller aft as far as possible, then tighten the nuts evenly and torque to 55-65 lb ft.

f. Position spinner support on front of propeller (1962 and on) and install spinner. See the "Note" on figure 14-5.

14-18. (Deleted)

14-19. PROPELLER GOVERNOR.

14-20. The propeller governor is a single-acting, centrifugal type, which boosts oil pressure from the engine and directs it to the propeller where the oil is used to increase blade pitch of some propellers and to decrease blade pitch of others. A single-acting governor uses the oil pressure to effect a pitch change in one direction only; a pitch change in the opposite direction results from propeller counterweights, centrifugal twisting moment of blades, compressed springs, or a combination of some of these. Oil pressure is boosted in the governor by a gear type oil pump. A pilot valve, flyweights, and a speeder spring act together to change propeller pitch as required to maintain a constant engine speed.

CAUTION

Since McCauley and Hartzell propellers require governors which "sense" differently (refer to paragraph 14-9), and the same basic type governor may be set to "sense" either way, it is important to ascertain that the governor is correct for the propeller being used. On early Woodward governors and governors manufactured by Hoof Products Company, "sensing" is determined by the location of a by-pass plug. On later Woodward governors, as well as early ones which have been reworked, "sensing" is determined by the type pilot valve installed inside the governor. Refer to figure 14-6 for proper location of plugs on Woodward and Hoof governors. A McCauley propeller with a Garwin governor is the only combination used on the Model 175 (1962 and on).

14-21. TROUBLE SHOOTING. When trouble shooting the propeller-governor combination, it is recommended that a governor known to be in good condition be installed to check whether the propeller or the governor is at fault. Removal and replacement, rigging, checking plug locations, desludging, and replacement of the governor mounting gasket are not major repairs and may be accomplished in the field. Repairs to propeller governors are classed as propeller major repairs in CAM 18, which also defines who may accomplish such repairs.

14-22. REMOVAL OF PROPELLER GOVERNOR.

a. Remove cowling and engine baffles as required for access.

b. Disconnect governor control from governor.

c. Remove nuts and washers securing governor to engine and remove governor.

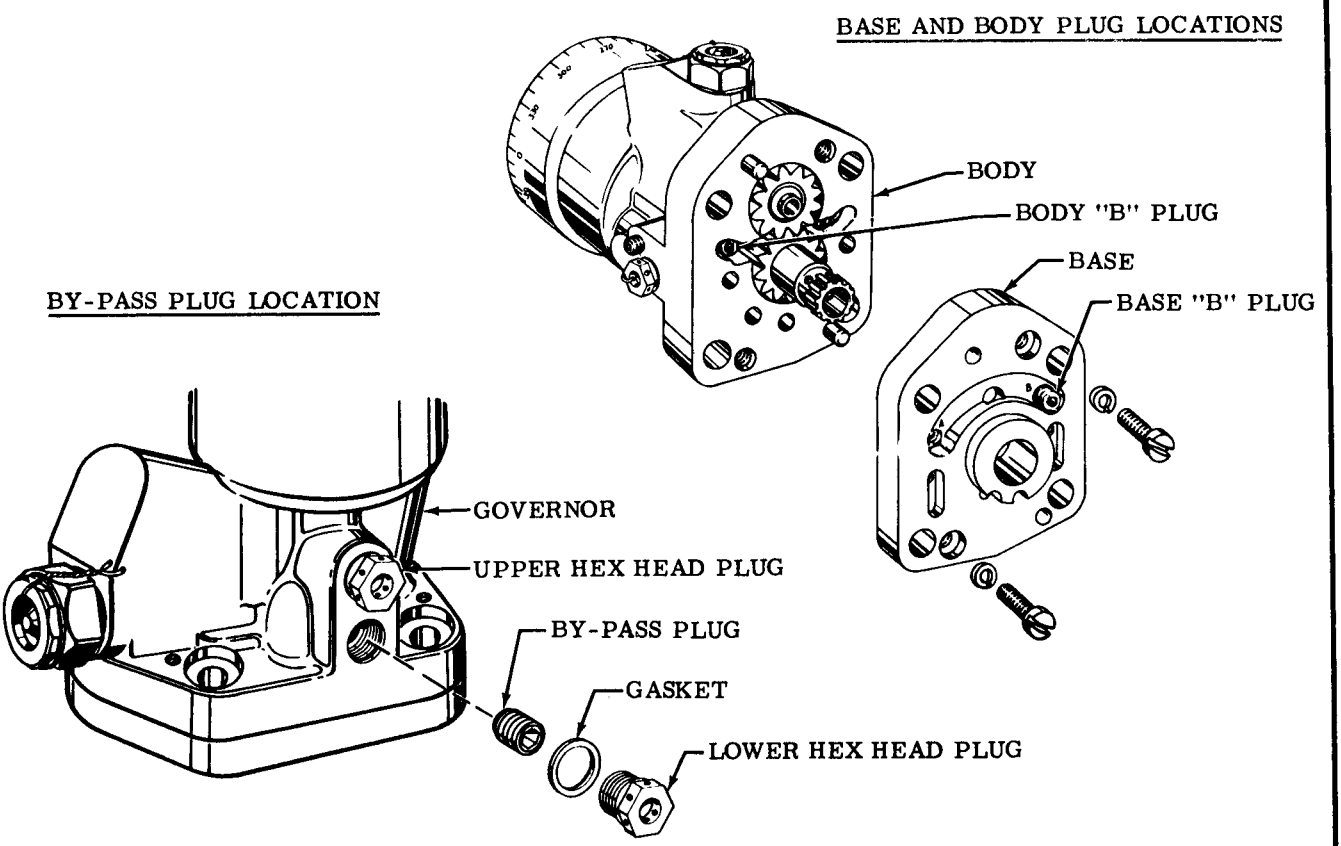

NOTES

1. Location of base and body plugs determines the direction of rotation for the governor. On all Cessna aircraft, the body plug should be located in hole "B" and the base plug in hole "B". Notice that these holes are on opposite sides of the governor.

2. Governor "sensing" (whether oil from the governor is used to increase or decrease propeller pitch) is determined either by location of the by-pass plug or by the type of pilot valve installed inside the governor.

3. On early model Woodward governors, the by-pass plug should be located in the lower passage for use with all McCauley propellers and Hartzell HC-82XF-6 series propellers. It should be located in the upper passage for use with all other Hartzell propellers.

4. Location of the by-pass plug on Hoof governors is the same as in the preceding note.

5. On later model Woodward governors, "sensing" is determined by the type of pilot valve installed inside the governor instead of by location of a by-pass plug.

6. A McCauley propeller with a Garwin governor is the only combination used on the Model 175 (1962 and on).

7. Some early model Woodward governors have been converted from "sensing" by location of the by-pass plug to "sensing" by the type pilot valve installed inside the governor. These converted governors retain the by-pass plug, but it must be installed in the UPPER passage, regardless of the propeller with which it is used.

8. There are two types of by-pass plugs used on governors. One is a pin type and the other is a threaded, internal-wrenching type.

9. Do not use thread seal on any of the governor plugs.

Figure 14-6. Governor Plug Locations

d. Remove gasket between governor and engine.

14-23. INSTALLATION OF PROPELLER GOVERNOR.

a. Wipe governor and engine mounting pad clean.

b. Install a new gasket with raised surface away from engine.

c. Position governor on mounting studs, aligning splines on governor with those on engine, and install nuts and washers.

NOTE

Do not force engaging of splines. Rotate engine crankshaft slightly and splines will engage smoothly when properly aligned.

d. Connect governor control to governor and rig.

14-24. CHECKING GOVERNOR PLUG LOCATIONS. Figure 14-6 illustrates the positions of base and body plugs for clockwise rotation. On Cessna aircraft, both base and body plugs should be in holes marked "B." Notice that the "B" holes are opposite each other in the body and base. The governor must be removed to check body and base plug locations.

By-pass plug location is also illustrated in figure 14-6. Pin-type by-pass plugs are used in some governors, and threaded, internal-wrenching plugs are used in others. To check location of the by-pass plug, remove the two external hex-head plugs illustrated. Governor removal is not required for this check.

CAUTION

Do not use thread seal on any governor plugs.

14-25. HIGH RPM STOP ADJUSTMENT.

a. Remove safety wire from high rpm stop screw. A jam nut is provided to lock the stop screw on some governors.

b. Turn the stop screw in to decrease maximum rpm and out to increase maximum rpm. One turn is approximately 25 rpm.

c. Make propeller control linkage adjustments as necessary.

d. Tighten the jam nut, safety the stop screw, and test operate the propeller and governor.

NOTE

It is possible for either the propeller low pitch (high rpm) stop or the governor high rpm stop to be the high rpm limiting factor. It is desirable for the governor stop to limit the high rpm at the maximum rated rpm for a particular airplane. Due to climatic conditions, field elevation, low pitch blade angle, and other considerations, an engine may not reach rated rpm on the ground. It may be necessary to readjust the governor stop after test flying to obtain maximum rated rpm when airborn.

14-26. RIGGING THE PROPELLER GOVERNOR CONTROL.

a. Disconnect control end from governor arm.

b. Place propeller control in cabin full forward, then pull back approximately 1/8" and lock in this position. This will allow "cushion" to assure full contact with the governor high rpm stop screw.

c. Place governor arm against the high rpm stop screw.

d. Loosen jam nut and adjust control rod end until it exactly coincides with the governor arm when it is against the high rpm stop screw. Be sure to maintain sufficient thread engagement of the control and the rod end. If necessary, shift the control in its clamps to achieve this.

e. Attach control rod end to the governor arm, tighten jam nut, and install all safeties.

f. Operate the propeller control to see that the governor arm attains full travel in both directions.

NOTE

Some models are equipped with an offset extension to the governor arm which affords further adjustment. The preceding steps may still be used as an outline of the rigging procedure. The results of rigging, in all cases, should be full travel of the governor arm, with some "cushion" at the control full-in position.

SECTION 14A

PROPELLERS

(HARTZELL MODEL BHC-C2YF-1)

(SEE SECTION 14 FOR ALL OTHER PROPELLERS)

TABLE OF CONTENTS

	Page
DESCRIPTION	14A-1
REPAIR	14A-1
TROUBLE SHOOTING	14A-1
REMOVAL	14A-4
INSTALLATION	14A-4
GOVERNOR AND CONTROL	14A-4

14A-1. DESCRIPTION.

14A-2. A Hartzell Model BHC-C2YF-1 propeller may be used on the Model 182, 1962 and on. This propeller is a single-acting propeller in which oil pressure from the engine, boosted and regulated by a governor, is used on increase blade pitch, and the natural, centrifugal twisting moment of the rotating blades and the force of a spring, are used to decrease blade pitch. Unlike other Hartzell propellers, the pitch changing mechanism is internal, no blade counterweights are used, and the hub is made in two halves which bolt together around the butt ends of the propeller blades. The propeller is illustrated in figure 14A-1.

CAUTION

Model BHC-C2YF-1 Hartzell propellers require governors which "sense" like McCauley propellers, since boosted oil pressure also increases blade pitch in this newly-designed Hartzell propeller.

14A-3. REPAIR of propellers is discussed in paragraph 14-3.

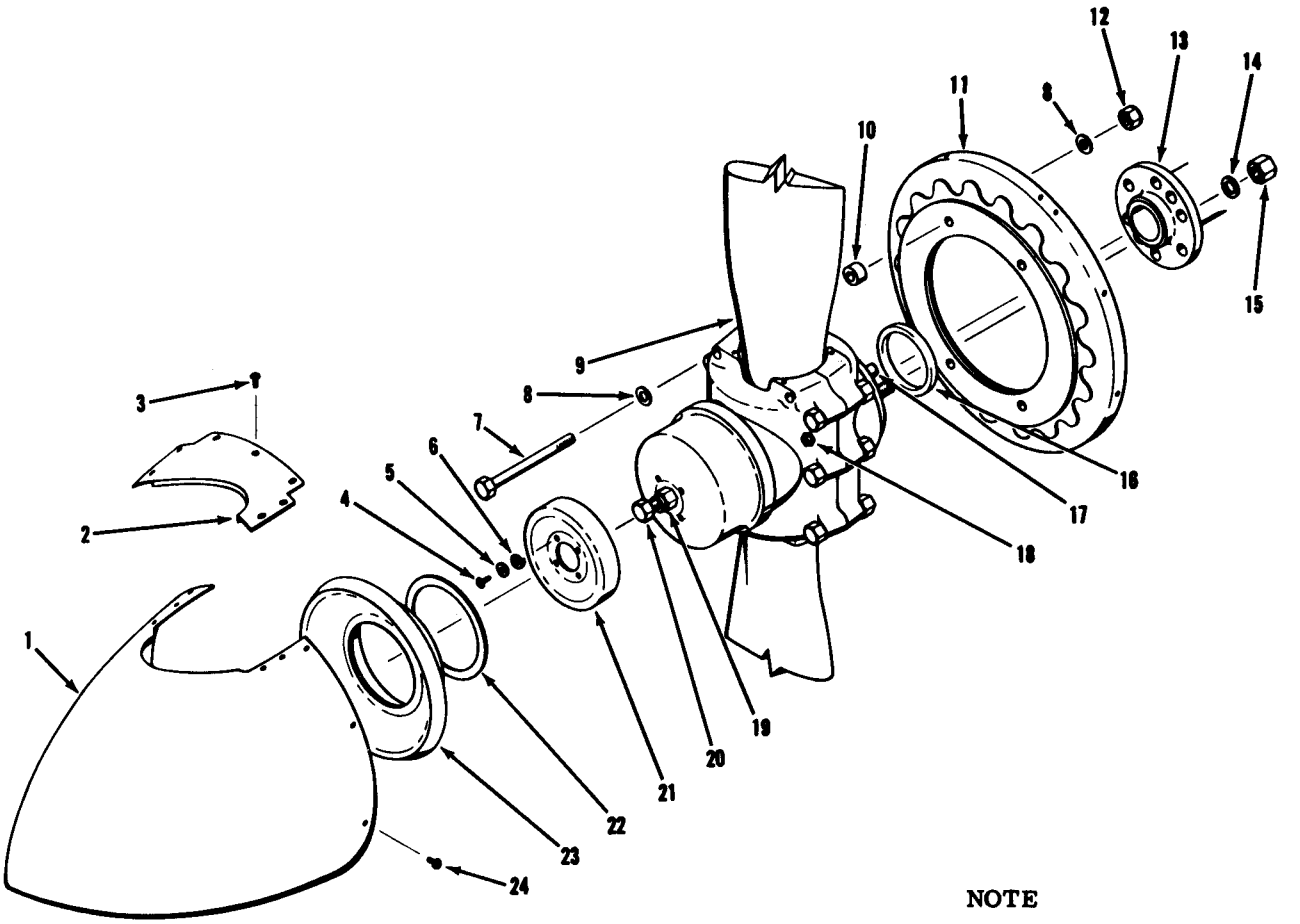

NOTE

Use spacers (22) as required to cause a snug fit between the spinner and the spinner support.

1. Spinner
2. Fillet
3. Rivet
4. Screw
5. Washer
6. Lockwasher
7. Bolt
8. Washer
9. Propeller
10. Spacer
11. Spinner Bulkhead
12. Nut
13. Engine Crankshaft
14. Washer
15. Nut
16. O-Ring
17. Dowel Pin
18. Grease Fitting
19. Locknut
20. Low Pitch Stop Bolt
21. Spinner Support Bulkhead
22. Spacer
23. Spinner Support
24. Screw

Figure 14A-1. Hartzell Model BHC-C2YF-1 Propeller Installation

14A-4. TROUBLE SHOOTING.

PROBABLE CAUSE	ISOLATION PROCEDURE	REMEDY
FAILURE TO CHANGE PITCH.		
Control disconnected or broken.	Check visually.	Connect or replace control.
Governor not correct for propeller. "Sensing" wrong.	Check that correct governor is installed.	Install correct governor.
Defective governor.	See paragraph 14-21.	See paragraph 14-21.
Defective pitch changing mechanism or excessive blade friction.	Lubricate propeller and check manually.	Propeller repair or replacement is required.
FAILURE TO CHANGE PITCH FULLY.		
Improper rigging of governor control.	Check that arm on governor has full travel.	Rig correctly.
Defective governor.	See paragraph 14-21.	See paragraph 14-21.
SLUGGISH RESPONSE TO PROPELLER CONTROL.		
Excessive friction in pitch changing mechanism or excessive blade friction.	Lubricate propeller and check manually.	Propeller repair or replacement is required.
STATIC RPM TOO HIGH.		
Governor high rpm stop set too high.	See "Note" at end of this chart.	Rig correctly.
Defective governor.	See paragraph 14-21.	See paragraph 14-21.
Incorrect propeller or incorrect low pitch blade angle.	Check aircraft specifications.	Install correct propeller, with correct blade angle.
STATIC RPM TOO LOW.		
Governor high rpm stop set too low.	See "Note" at end of this chart.	Rig correctly.
Defective governor.	See paragraph 14-21.	See paragraph 14-21.
Incorrect propeller or incorrect low pitch blade angle.	Check aircraft specifications.	Install correct propeller, with correct blade angle.
ENGINE SPEED WILL NOT STABILIZE.		
Sludge in governor.	See paragraph 14-21.	See paragraph 14-21.
Air trapped in propeller actuating cylinder.	This condition may occur after the propeller has been reinstalled or has been idle for an extended period.	Trapped air should be purged by exercising the propeller several times prior to take-off after the propeller has been reinstalled or has been idle for an extended period.

PROBABLE CAUSE	ISOLATION PROCEDURE	REMEDY
ENGINE SPEED WILL NOT STABILIZE (Cont).		
Excessive friction in pitch changing mechanism or excessive blade friction.	Lubricate propeller and check manually.	Propeller repair or replacement is required.
Defective governor.	See paragraph 14-21.	See paragraph 14-21.
OIL LEAKAGE AT MOUNTING FLANGE.		
Damaged O-ring seal between engine and propeller.	Check visually for oil leakage.	Replace O-ring seal.
Foreign material between engine and propeller mounting flange or nuts not tight.	Check visually for oil leakage.	Clean propeller and engine flanges and tighten nuts properly.
GREASE LEAKAGE AT GREASE FITTING.		
Loose or defective grease fitting.	Check visually for grease leakage.	Tighten loose grease fitting; replace, if defective.
OIL OR GREASE LEAKAGE AT ANY OTHER PLACE.		
Defective seals, gaskets, threads, etc. or incorrect assembly.	Check visually for oil or grease leakage.	Propeller repair or replacement is required.

NOTE

It is possible for either the propeller low pitch (high rpm) stop or the governor high rpm stop to be the high rpm limiting factor. It is desirable for the governor stop to limit the high rpm at the maximum rated rpm for a particular airplane. Due to climatic conditions, field elevation, low pitch blade angle, and other considerations, an engine may not reach rated rpm on the ground. It may be necessary to readjust the governor stop after test flying to obtain maximum rated rpm when airborn.

14A-4. REMOVAL.

a. Remove screws securing spinner to spinner bulkhead and remove spinner.

b. Remove spinner support from front of propeller. Remove any spacers used behind the spinner support.

c. Remove safety wire from propeller mounting studs and remove mounting nuts and washers.

NOTE

As the propeller is separated from the engine, oil will drain from propeller and engine cavities.

d. Pull propeller forward to remove from engine.

e. If desired, the spinner bulkhead can be removed from the propeller.

14A-5. INSTALLATION.

a. If spinner bulkhead was removed, reassemble it to the propeller with the spacers located between the propeller hub and the spinner bulkhead. Torque to 20-22 lb ft (do not over-torque).

b. Remove any nicks, burrs or sharp edges from the crankshaft, and clean the propeller hub cavity and mating surfaces.

c. Lightly lubricate a new O-ring and the crankshaft pilot and install the O-ring in the propeller hub.

d. Check that the two dowel pins are in place in the aft side of the propeller hub. Align mounting studs and dowel pins with proper holes in crankshaft and slide propeller carefully over the crankshaft pilot.

e. Install propeller mounting washers and nuts. Tighten the nuts evenly and torque to 60-65 lb ft. Safety the studs with .040" monel safety wire.

f. Install any spacers used between the spinner support and its bulkhead, then install the spinner support and spinner. Refer to the "Note" in figure 14A-1.

14A-6. PROPELLER GOVERNOR AND CONTROL information is contained in paragraphs 14-19 thru 14-26, which may be used as a maintenance guide as long as it is remembered that the Hartzell Model BHC-C2YF-1 propeller requires a governor which "senses" like the governor used for McCauley propellers. Boosted engine oil pressure is used to increase blade pitch.

SECTION 15

HEATING, VENTILATING

TABLE OF CONTENTS Page

HEATING 15-1
Trouble Shooting 15-1
Heater Hose Replacement. 15-1
Heater Inspection 15-1
Heater Valve 15-1
CABIN AIR VENTILATION 15-1

15-1. HEATING.

15-2. Cabin heat, defrosting and ventilation are provided by manifold heaters, ducting and valves which allow the entry of heated or unheated air to the cabin outlets. The only moving parts of the system are the valves and their controls, hence there is little mechanical wear involved. Normally the only maintenance check required on the heating system is careful examination to make sure that the heater muff has no burned spots or cracks which could allow exhaust fumes to enter the system and a check of hoses and ducting to make sure that air passage is unobstructed. Heater valves should be checked periodically to insure proper operation.

15-3. TROUBLE SHOOTING.

15-4. Most of the operational troubles in the heating, ventilating and defrosting system are caused by sticking or binding air valves and their controls, or damaged air ducting. In most cases air valves or controls can be freed by proper lubrication. Damaged or broken parts should be repaired or replaced. When checking the rigging of the controls, be sure valves respond freely to control movement and that they move through their full range of travel and seal properly. Also, check that valve movement is in the correct direction. Check that heater hoses are properly attached and replace hoses which are burned, frayed or crushed. If fumes are detected in the cabin, the heater shrouds should be removed to allow a very careful inspection of the exhaust stacks and heater muffs. Any holes or cracks may permit exhaust fumes to enter the cabin. Replacement of defective exhaust stacks or mufflers is imperative for exhaust fumes in the cabin constitute an extreme danger.

15-5. HEATER HOSE REPLACEMENT. Burned, frayed or crushed heater hose should be replaced. New hose should be cut to length and installed in the original routing. Note that the wire hose winding is trimmed shorter than the hose to allow hose clamps to be fitted.

15-6. HEATER INSPECTION requires the removal of the heater shrouds to allow a close check of the welded seams of the muffler.

15-7. HEATER VALVE repair consists of the replacement of defective parts. Figures 15-1 through 15-9 illustrate the construction of the valves used in the various airplanes.

15-8. CABIN AIR VENTS.

15-9. Overhead cabin ventilation is provided by manually adjustable ventilators installed on each side of the cabin near the upper corners of the windshield. Air is received from cabin air scoops mounted in the inboard wing leading edges. Formed elbows and ducts deliver ram air to the ventilator assemblies, which are adjustable to regulate the amount and direction of air emitted into the cabin. An adjustable fresh air door is provided on the forward right side of the fuselage of some airplanes. Air entering this door is routed to the duct across the firewall for blending with heated air or distribution as cold air into the cabin. Rear seat overhead ventilators are installed in some later model airplanes. The rear seat ventilator installation employs additional air inlets, ducting, and adjustable overhead outlets.

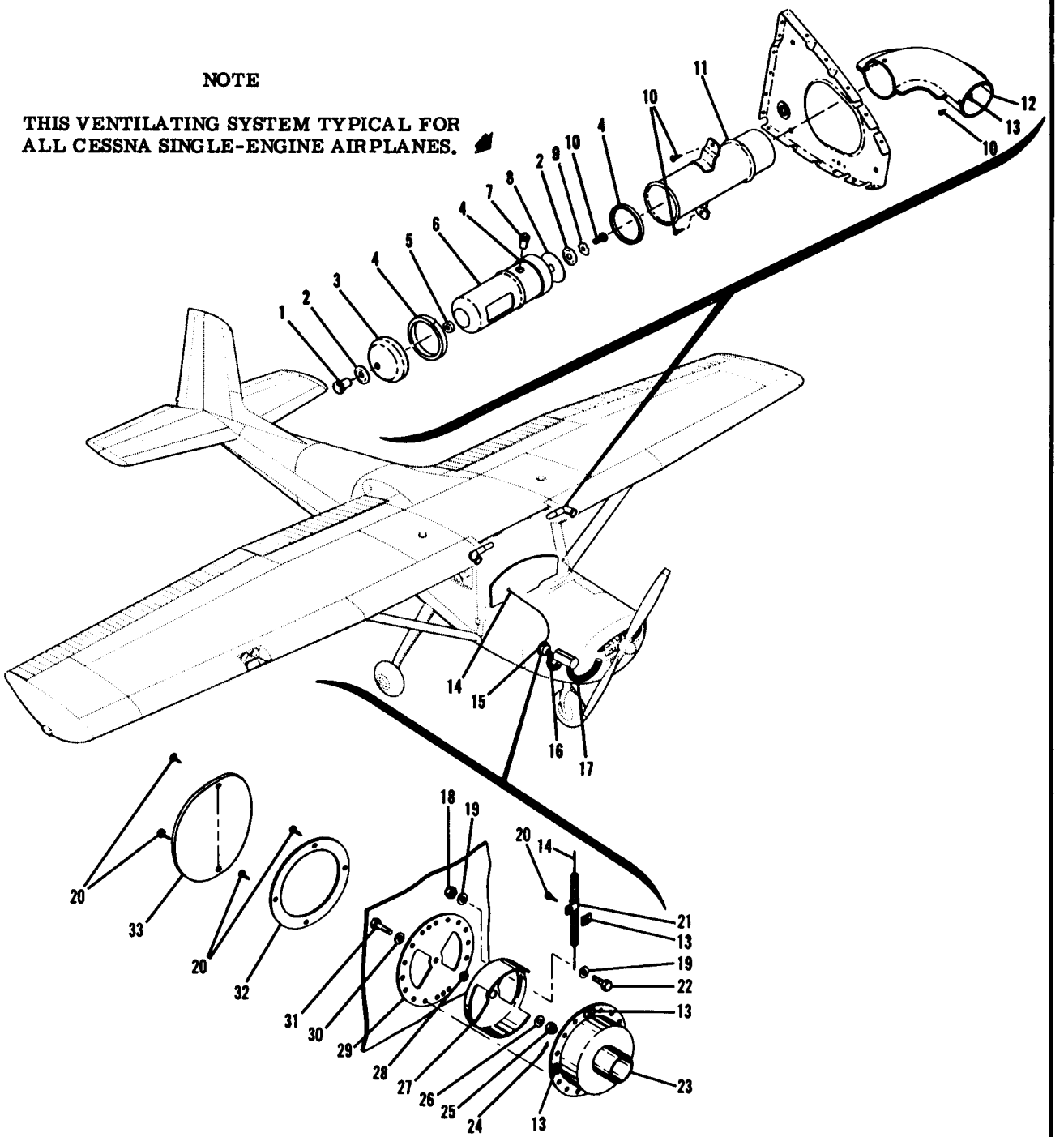

1. Knob
2. Washer
3. Cap
4. Seal
5. Spacer
6. Outlet
7. Catch
8. Large Washer
9. Star Lock Washer
10. Screw
11. Tube
12. Elbow
13. Nut
14. Heat Control
15. Valve
16. Hose (Valve to Shroud)
17. Hose (Shroud to Baffle)
18. Nut
19. Washer
20. Screw
21. Clamp
22. Clamp
23. Housing
24. Cotter Pin
25. Nut
26. Washer
27. Cylinder
28. Bearing
29. Plate
30. Washer
31. Washer
32. Plate
33. Deflector

Figure 15-1. Model 150 Heating and Ventilating System

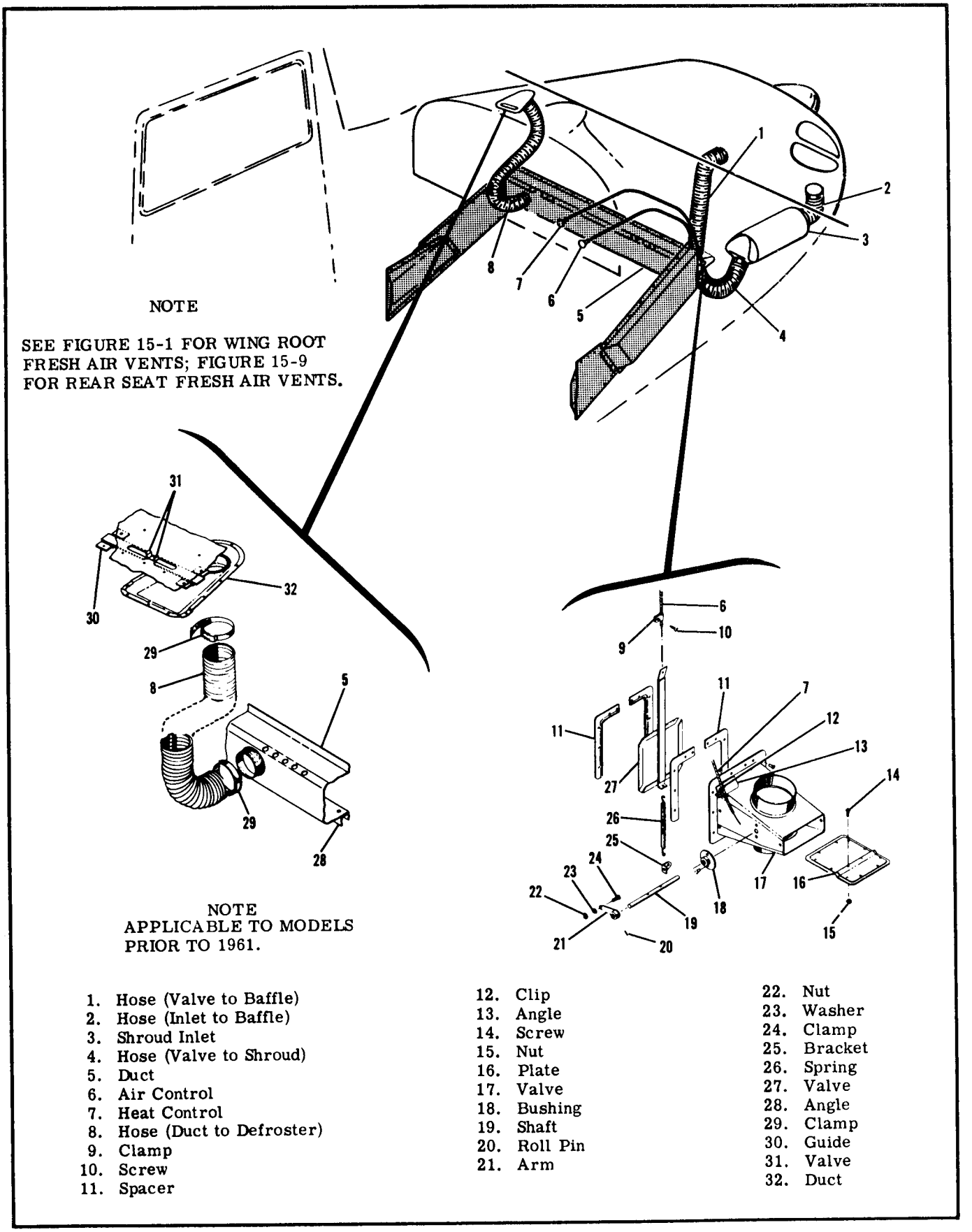

1. Hose (Valve to Baffle)
2. Hose (Inlet to Baffle)
3. Shroud Inlet
4. Hose (Valve to Shroud)
5. Duct
6. Air Control
7. Heat Control
8. Hose (Duct to Defroster)
9. Clamp
10. Screw
11. Spacer
12. Clip
13. Angle
14. Screw
15. Nut
16. Plate
17. Valve
18. Bushing
19. Shaft
20. Roll Pin
21. Arm
22. Nut
23. Washer
24. Clamp
25. Bracket
26. Spring
27. Valve
28. Angle
29. Clamp
30. Guide
31. Valve
32. Duct

Figure 15-2. Model 172 Cabin Heating and Ventilating System, Prior to 1961

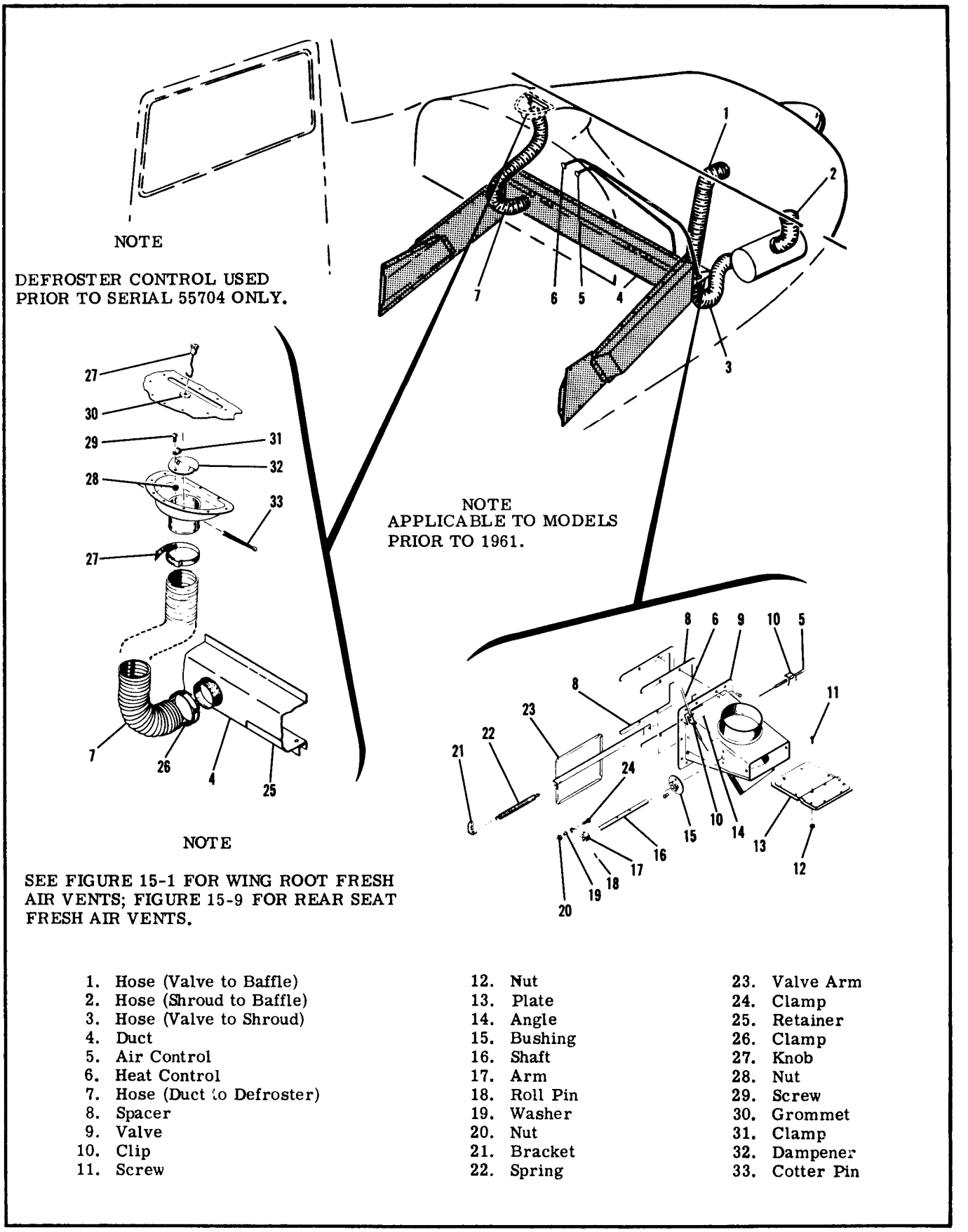

1. Hose (Valve to Baffle)
2. Hose (Shroud to Baffle)
3. Hose (Valve to Shroud)
4. Duct
5. Air Control
6. Heat Control
7. Hose (Duct to Defroster)
8. Spacer
9. Valve
10. Clip
11. Screw
12. Nut
13. Plate
14. Angle
15. Bushing
16. Shaft
17. Arm
18. Roll Pin
19. Washer
20. Nut
21. Bracket
22. Spring
23. Valve Arm
24. Clamp
25. Retainer
26. Clamp
27. Knob
28. Nut
29. Screw
30. Grommet
31. Clamp
32. Dampener
33. Cotter Pin

Figure 15-3. Model 175 Cabin Heating and Ventilating System, Prior to 1961

NOTE
SEE FIGURE 15-1 FOR WING ROOT FRESH AIR VENTS; FIGURE 15-9 FOR REAR SEAT FRESH AIR VENTS.

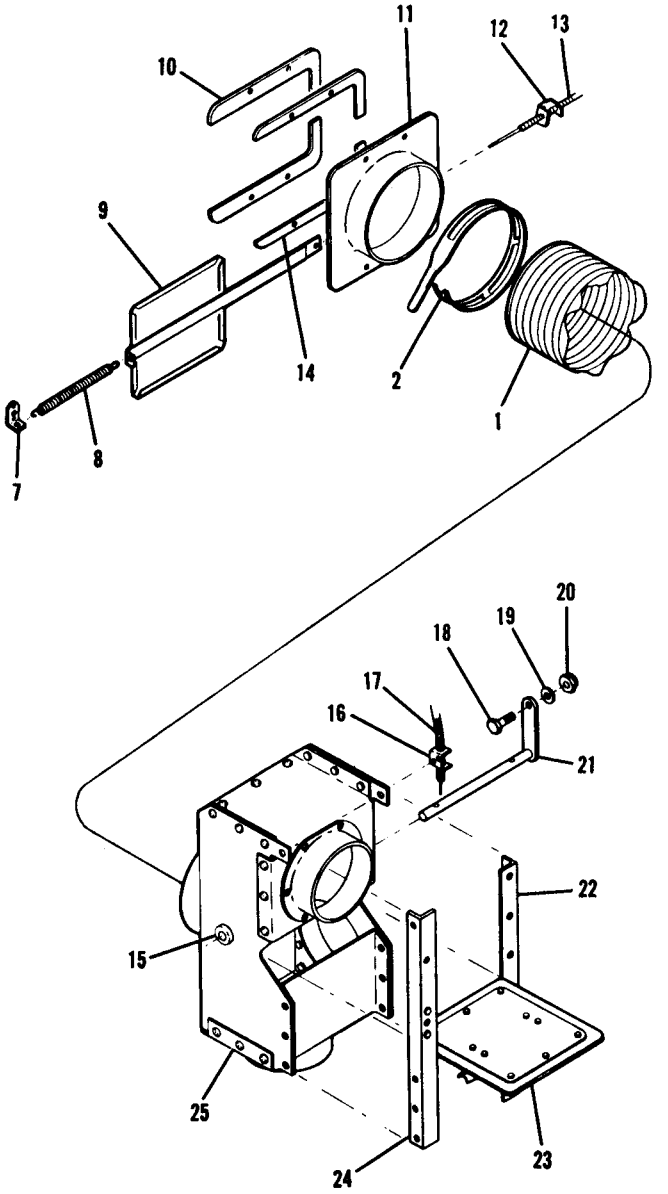

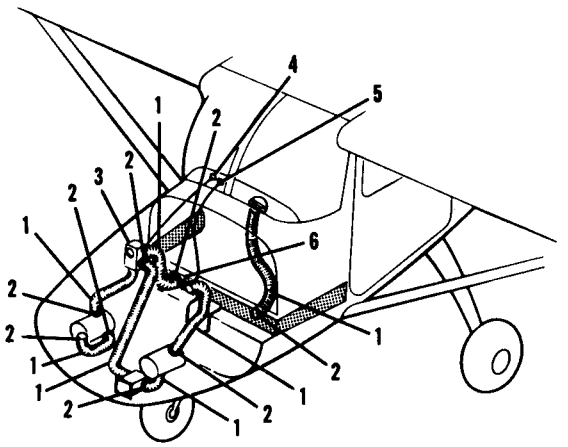

MODEL 175 (1961)

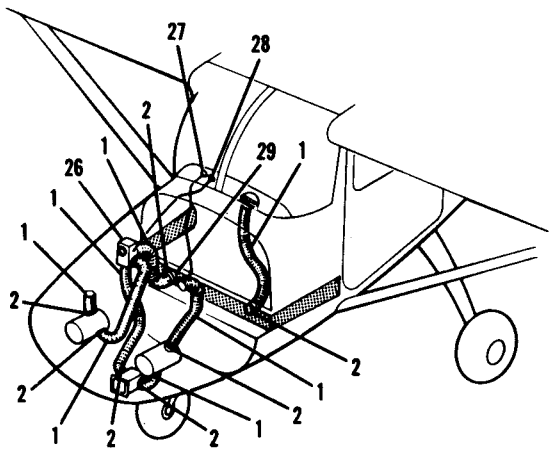

MODEL 172 (1961 & on)

1. Hose
2. Clamp
3. Valve Assembly
4. Control Assembly
5. Control Assembly
6. Adapter
7. Bracket
8. Spring
9. Valve Arm Assembly
10. Spacer
11. Adapter
12. Clip
13. Control Assembly
14. Spacer
15. Grommet
16. Clip
17. Control Assembly
18. Bolt
19. Washer
20. Nut
21. Shaft Assembly
22. Angle
23. Plate Assembly
24. Angle
25. Valve Assembly
26. Valve Assembly
27. Control Assembly
28. Control Assembly
29. Adapter

Figure 15-4. Models 172 (1961 & on) & 175 (1961) Cabin Heating and Ventilating Systems.

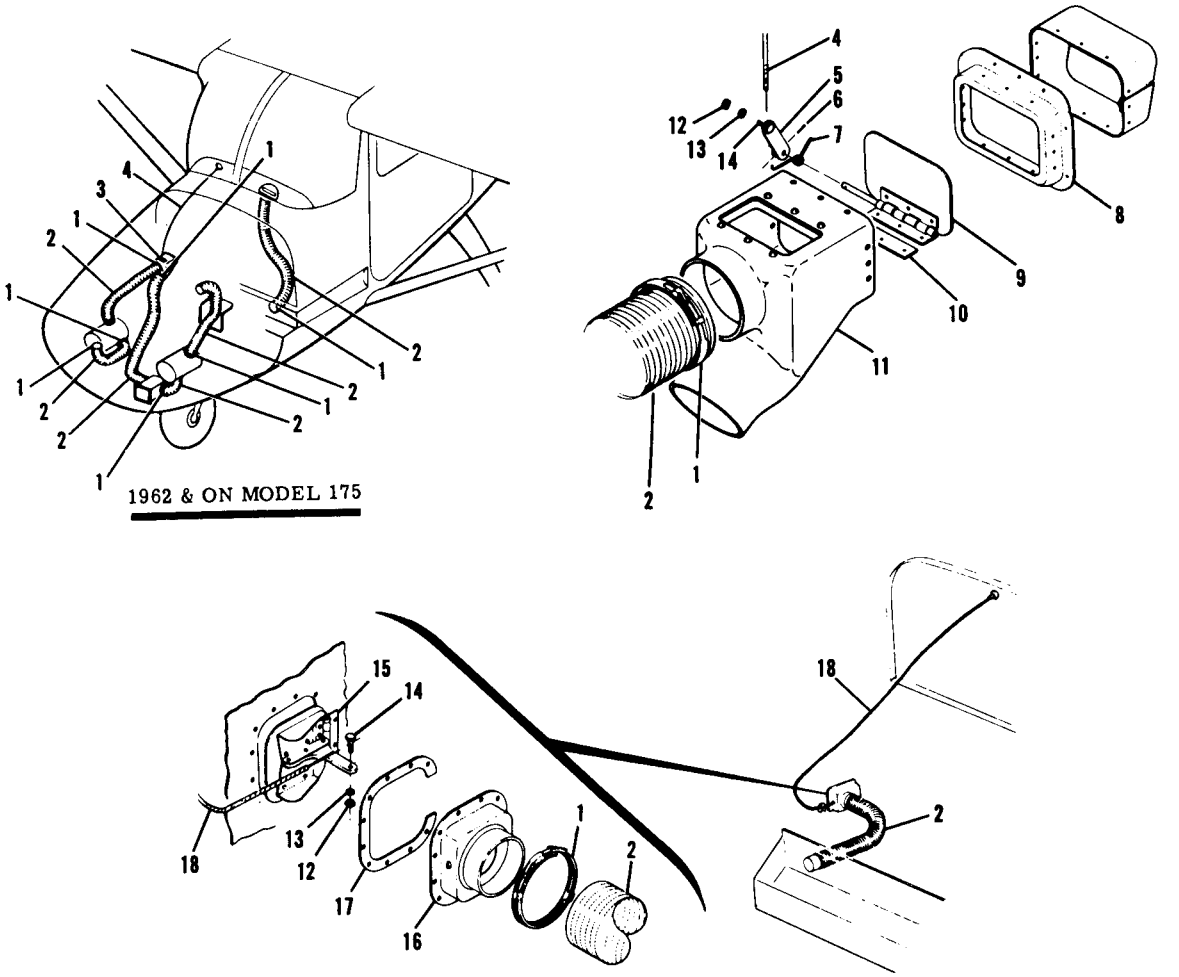

1. Clamp
2. Hose
3. Warm Air Valve Assembly
4. Cabin Heat Control
5. Arm
6. Roll Pin
7. Spring
8. Valve Seat
9. Valve Plate Assembly
10. Shim
11. Valve Body
12. Nut
13. Washer
14. Clamp
15. Air Vent Door Assembly
16. Inlet
17. Seal
18. Cabin Air Control

NOTE

SEE FIGURE 15-1 FOR WING ROOT FRESH AIR VENTS; FIGURE 15-9 FOR REAR SEAT FRESH AIR VENTS.

Figure 15-5. Model 175 Heating and Ventilating System (1962 and on)

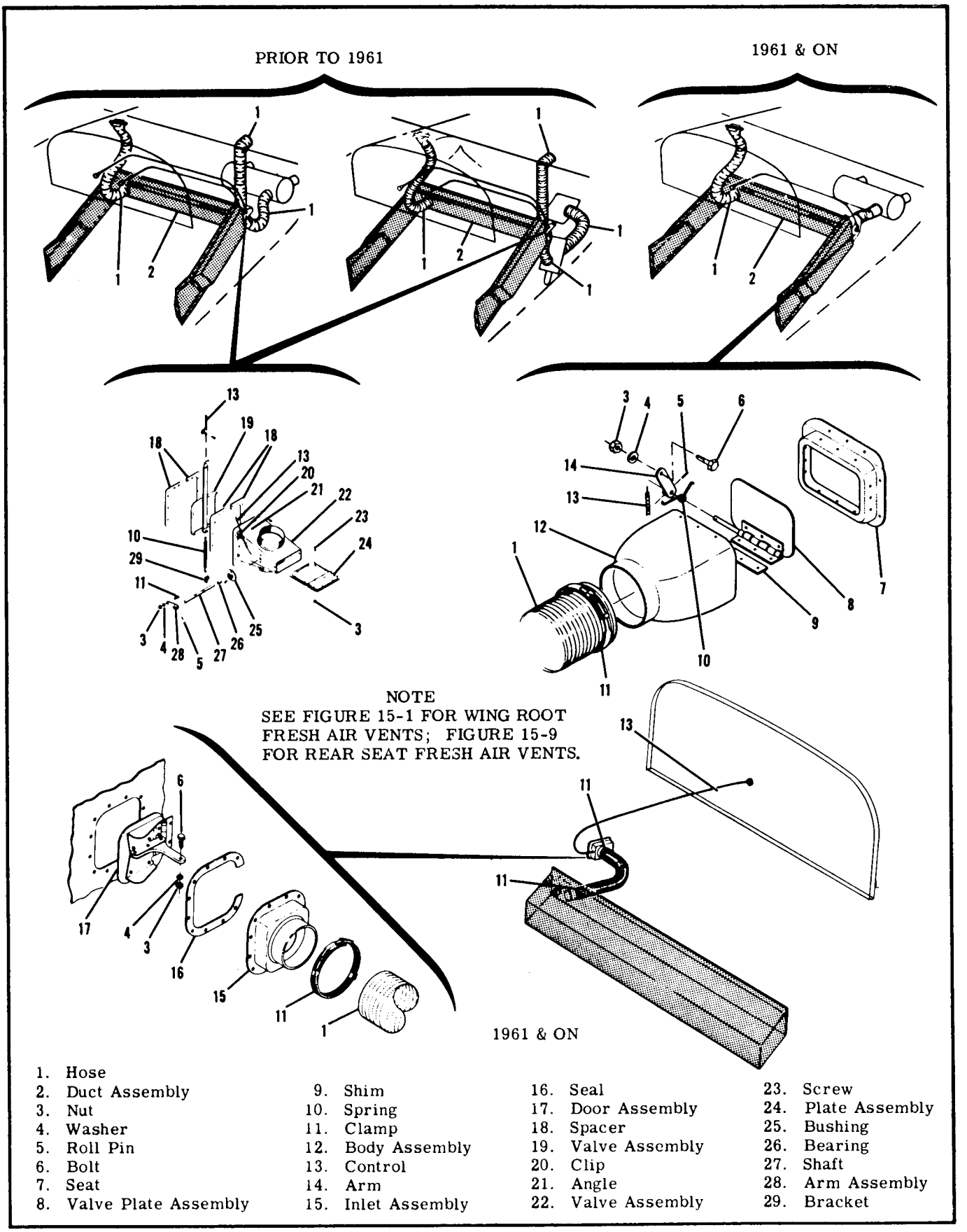

1. Hose
2. Duct Assembly
3. Nut
4. Washer
5. Roll Pin
6. Bolt
7. Seat
8. Valve Plate Assembly
9. Shim
10. Spring
11. Clamp
12. Body Assembly
13. Control
14. Arm
15. Inlet Assembly
16. Seal
17. Door Assembly
18. Spacer
19. Valve Assembly
20. Clip
21. Angle
22. Valve Assembly
23. Screw
24. Plate Assembly
25. Bushing
26. Bearing
27. Shaft
28. Arm Assembly
29. Bracket

Figure 15-6. Models 180, 182 (prior to 1962) &185 Cabin Heating and Ventilating System.

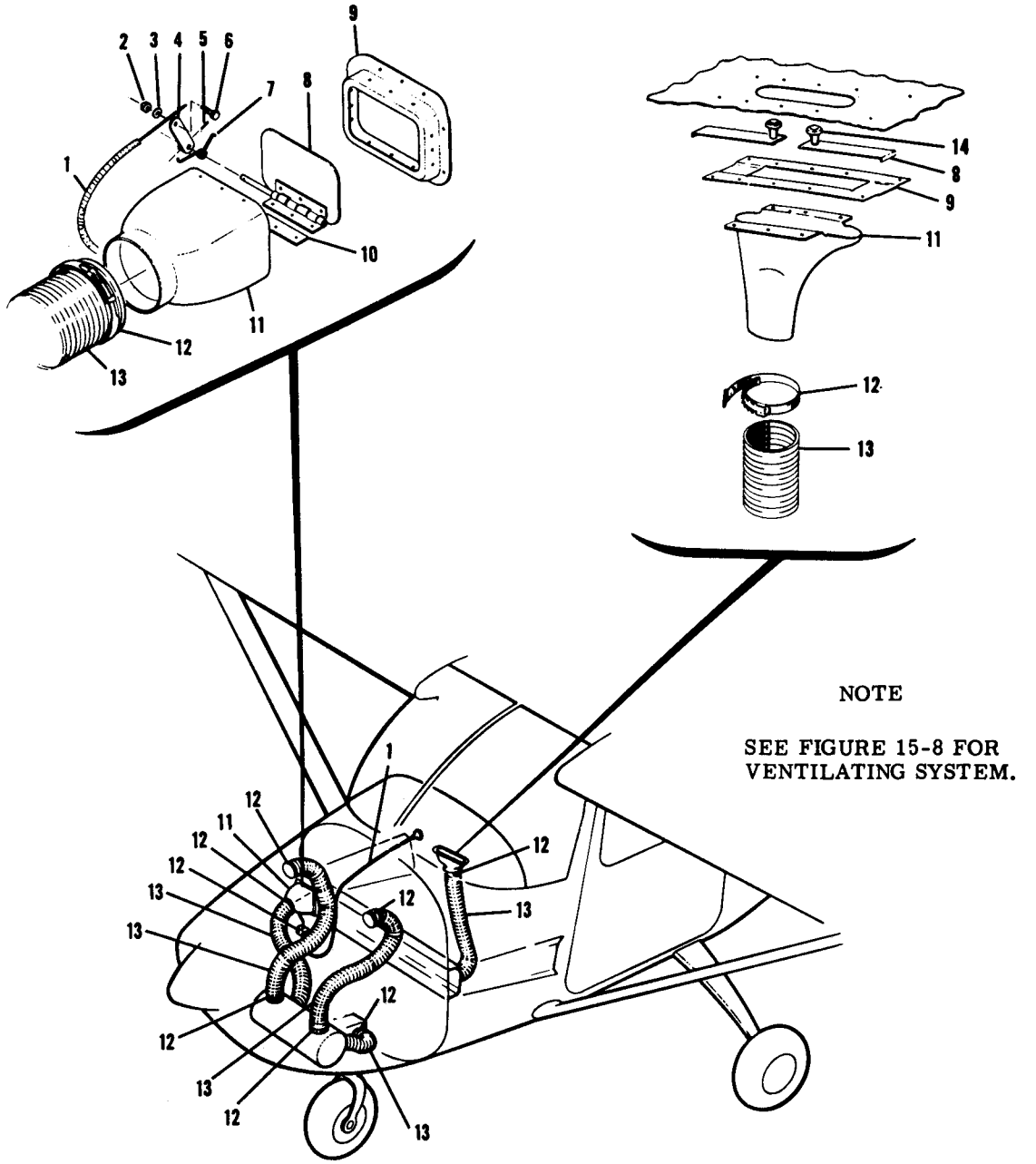

1. Cabin Heat Control
2. Nut
3. Washer
4. Arm
5. Roll Pin
6. Bolt
7. Spring
8. Valve Plate Assy
9. Valve Seat
10. Shim
11. Valve Body
12. Clamp
13. Hose
14. Knob

Figure 15-7. Model 182 Heating and Defrosting System (1962 & on)

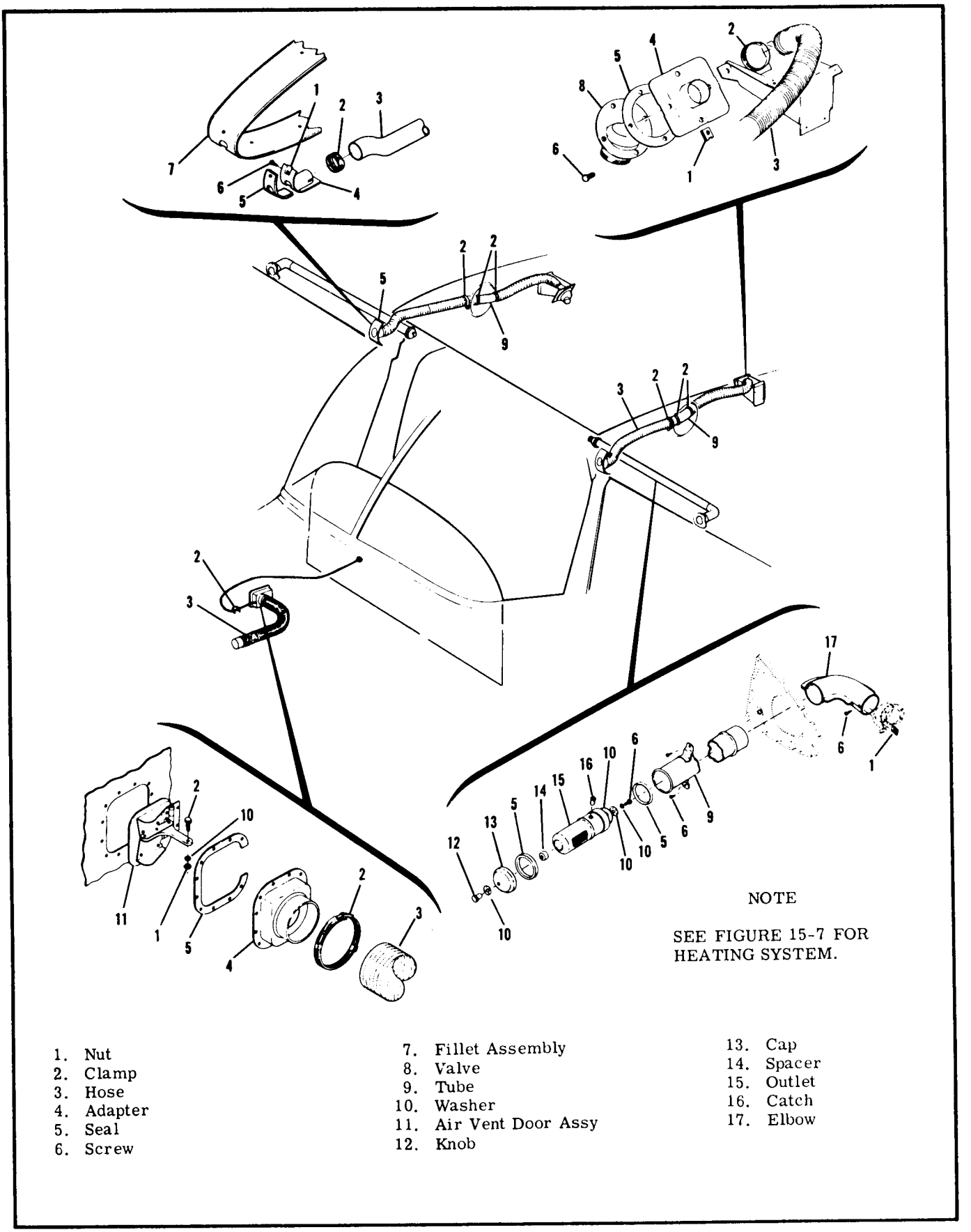

1. Nut
2. Clamp
3. Hose
4. Adapter
5. Seal
6. Screw
7. Fillet Assembly
8. Valve
9. Tube
10. Washer
11. Air Vent Door Assy
12. Knob
13. Cap
14. Spacer
15. Outlet
16. Catch
17. Elbow

Figure 15-8. Model 182 Ventilation System (1962 & on)

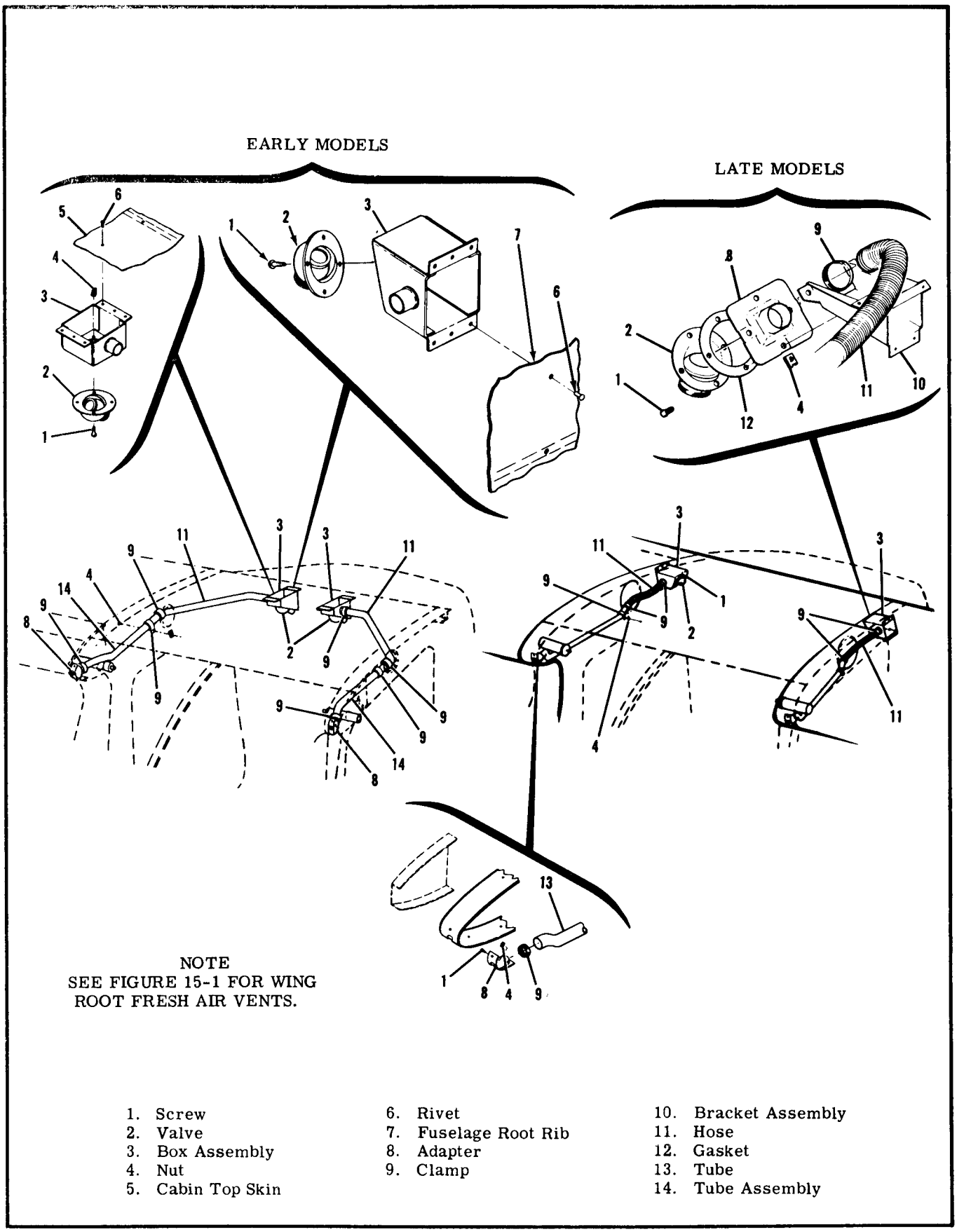

1. Screw
2. Valve
3. Box Assembly
4. Nut
5. Cabin Top Skin
6. Rivet
7. Fuselage Root Rib
8. Adapter
9. Clamp
10. Bracket Assembly
11. Hose
12. Gasket
13. Tube
14. Tube Assembly

Figure 15-9. Rear Seat Vents (Except 182, 1962 & on)

SECTION 16

INSTRUMENTS AND INSTRUMENT SYSTEMS

TABLE OF CONTENTS

	Page
GENERAL	16-1
INSTRUMENT PANELS	16-1
Removal	16-4
Adding Extra Shock Mounts	16-4
Installation	16-4
Instrument Removal	16-4
Instrument Installation	16-4
PITOT AND STATIC SYSTEMS	16-4
Trouble Shooting — Pitot-Static System	16-5
Trouble Shooting — Airspeed Indicator	16-6
Trouble Shooting — Altimeter	16-6
Trouble Shooting — Vertical Speed Indicator	16-7
Trouble Shooting — Pitot-Static Head	16-7
Pitot and Static System Maintenance	16-8
Aligning Pitot Tube	16-8
Checking for Leaks	16-8
Blowing Out Pitot Lines	16-8
Removal of Pitot and Static Pressure System	16-8
Replacement of Pitot and Static Pressure System	16-8
VACUUM SYSTEMS	16-11
Trouble Shooting — Vacuum System	16-11
Trouble Shooting — Gyro Horizon	16-12
Trouble Shooting — Vacuum Pump	16-13
Trouble Shooting — Vacuum Switch	16-14
Vacuum System Removal	16-14
Vacuum System Replacement	16-14
Vacuum System Cleaning	16-14
Suction Gage Readings	16-14
ENGINE INDICATORS	16-18
Tachometer	16-18
Manifold Pressure Gage	16-18
Trouble Shooting — Manifold Pressure Gage	16-18
Cylinder Head Temperature Gages	16-19
Trouble Shooting — Cylinder Head Temperature Gages	16-20
Cylinder Head Temperature Gage Maintenance	16-21
Oil Pressure Gage	16-21
Trouble Shooting — Oil Pressure Gage (Direct Reading)	16-21
Electric Oil Pressure Gage	16-21
Trouble Shooting — Oil Pressure Gage (Electric)	16-22
Oil Temperature Gage	16-22
Carburetor Air Temperature Gages	16-22
Trouble Shooting — Carburetor Air Temperature Gage (Electric)	16-23
Fuel Quantity Indicators (Electric)	16-24
Trouble Shooting — Fuel Quantity Indicators (Electric)	16-24
Transmitter Calibration	16-25
Fuel Flow Indicator	16-25
Trouble Shooting — Fuel Flow Indicator	16-25
MAGNETIC COMPASS	16-25
STALL WARNING HORN AND TRANSMITTER	16-26
TURN-AND-BANK INDICATOR	16-26
Trouble Shooting — Turn-and-Bank Indicator	16-26

16-1. GENERAL.

16-2. This section describes typical instrument installations and the systems operating them, with emphasis on trouble shooting and corrective measures for the systems themselves. It does not deal with specific instrument repairs since this usually requires special equipment and data and should be handled by instrument specialists. Civil Air Regulations require that malfunctioning instruments be sent to an approved instrument overhaul and repair station or returned to the manufacturer for servicing. Our concern here is with preventive maintenance on the various instrument systems and correction of system faults which result in instrument malfunctions.

The descriptive material, maintenance and trouble shooting information in this section is intended to help the mechanic determine malfunctions, and correct them, up to the defective instrument itself; at which point the instrument technician should be called in.

Some instruments, such as fuel quantity and oil pressure gages, are so simple and inexpensive that repairs usually will be more costly than a new instrument; on the other hand, aneroid and gyro instruments usually are well worth repairing. The words, "replace instrument" in the text, therefore, should be taken only in the sense of physical replacement in the airplane. Whether the replacement is to be with a new instrument, an exchange one or the original instrument is to be repaired must be decided on the basis of individual circumstances.

16-3. INSTRUMENT PANELS.

16-4. Instrument panels in Cessna aircraft are made in two main sections; the stationary panel which carries switches and controls and contains instruments, such as fuel quantity and oil pressure and

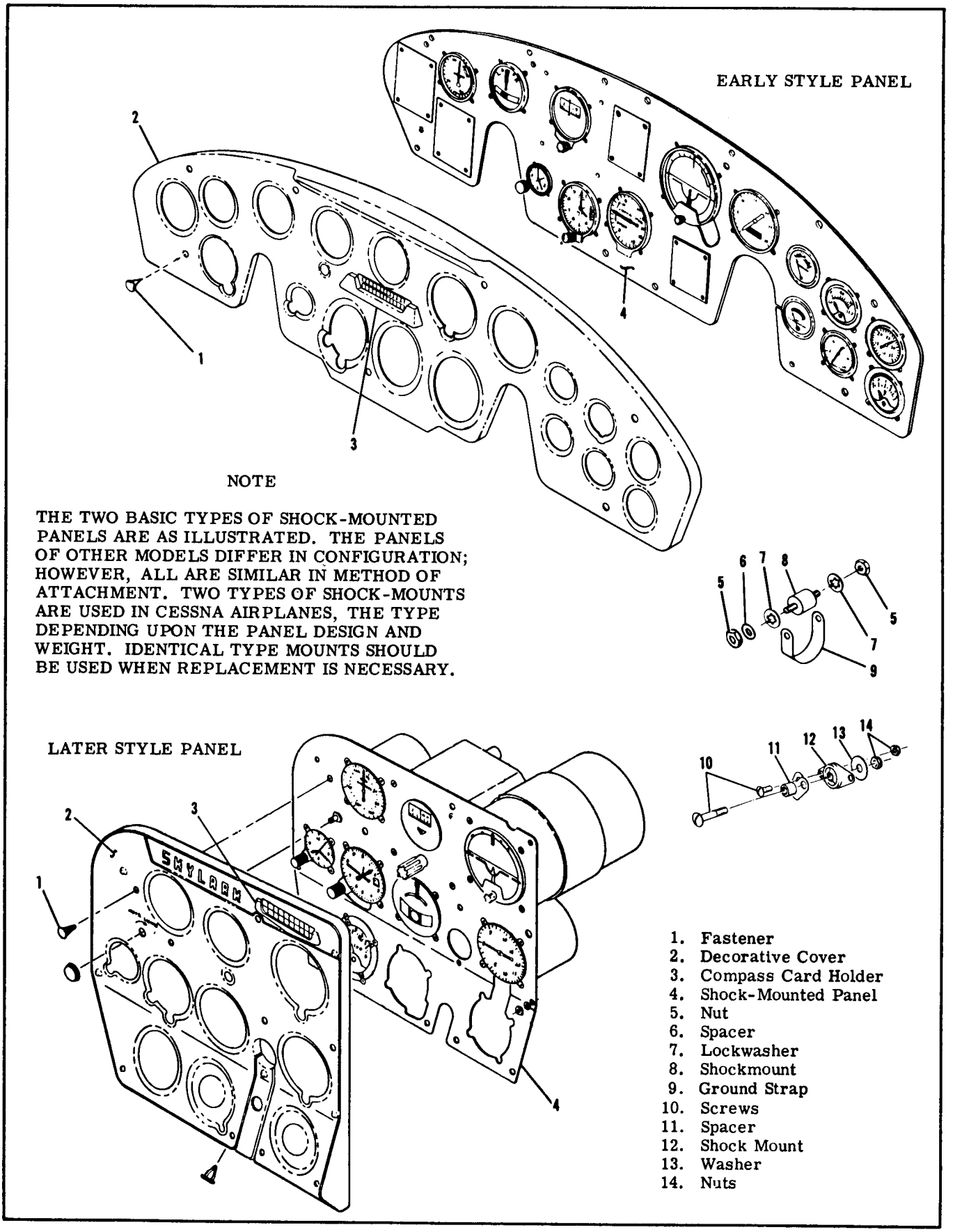

Figure 16-1. Shock-Mounted Panels

NOTE

ILLUSTRATION SHOWS STATIC SOURCE SUMP AS PROVIDED ON LATER MODELS. EARLY MODELS WERE NOT EQUIPPED WITH SUMPS.

MODELS 180, 182 & 185

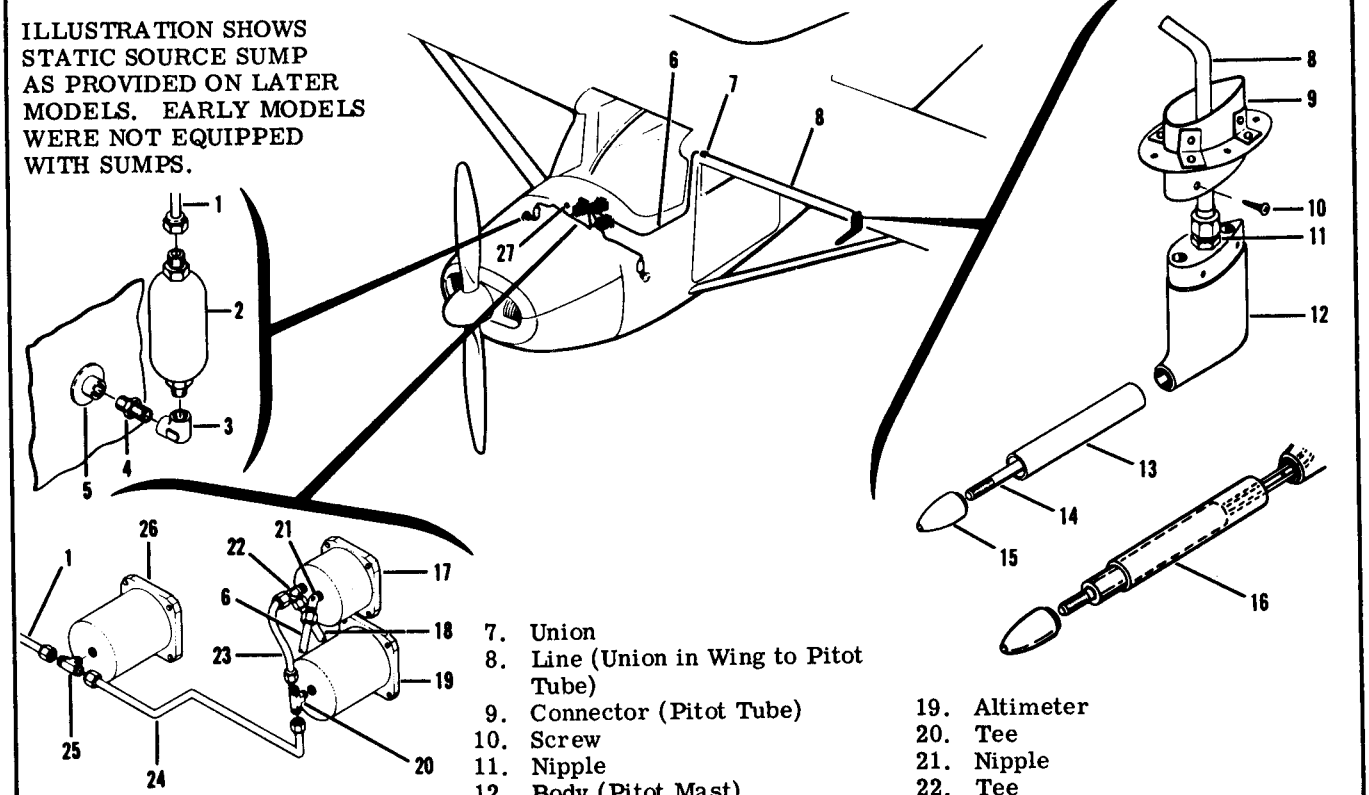

1. Line (Right Sump to Tee)
2. Right Static Source Sump
3. Elbow
4. Nipple
5. Right Static Port
6. Line (Airspeed Indicator to Union in Wing)
7. Union
8. Line (Union in Wing to Pitot Tube)
9. Connector (Pitot Tube)
10. Screw
11. Nipple
12. Body (Pitot Mast)
13. Tube (Pitot Mast)
14. Stem (Pitot Mast)
15. Nose Fitting (Pitot Mast)
16. Heater Assembly (Pitot Mast)
17. Airspeed Indicator
18. Line (Tee to Left Static Source Sump)
19. Altimeter
20. Tee
21. Nipple
22. Tee
23. Line (Airspeed Indicator Tee to Altimeter Tee)
24. Line (Altimeter Tee to Vertical Speed Indicator Tee)
25. Tee
26. Vertical Speed Indicator
27. Switch (Pitot Heater)

MODELS 150, 172 & 175

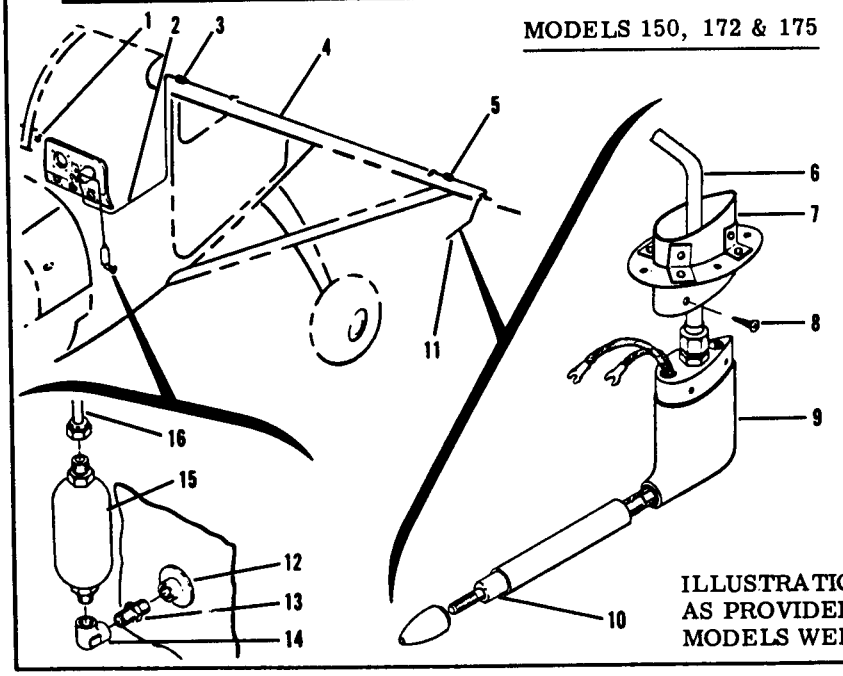

1. Switch (Pitot Heater)
2. Line (Airspeed Indicator to Union in Wing)
3. Union
4. Line (Pitot Tube to Wing Root)
5. Union
6. Line (Union to Heated Pitot Tube)
7. Connector (Pitot Tube)
8. Screw
9. Pitot Tube Mast Assy (Heated)
10. Heater Element (Pitot Mast)
11. Pitot Tube (Unheated)
12. Static Port
13. Nipple
14. Elbow
15. Static Source Sump
16. Line (Static Source to Airspeed Indicator)

NOTE

ILLUSTRATION SHOWS STATIC SOURCE SUMP AS PROVIDED ON LATER MODELS. EARLY MODELS WERE NOT EQUIPPED WITH SUMPS.

Figure 16-2. Pitot-Static Systems

temperature gages, which are not sensitive to vibration; and the shock-mounted panel which carries the major flight instruments. Most of the instruments are screw-mounted on the backs of the shock-mounted panels, which in turn are covered with metal or molded plastic decorative panels.

16-5. REMOVAL. The stationary instrument panels are secured to the engine mount stringers and a forward fuselage bulkhead and ordinarily are not considered removable. The shock-mounted panels are secured to the stationary panels by rubber shock mount assemblies.

a. To remove the shock-mounted panel, release the clips securing the decorative panel by carefully prying under the buttons on the clips. Remove any control knobs or lock nuts on the panel which would interfere and pull off the cover. Remove the nuts from the shock mount screws, tag and disconnect the instrument plumbing and wiring and pull the panel straight back. If it should become necessary to remove the shock mounted panel and its decorative cover from the airplane, on some aircraft the control wheel shaft and wheel must first be removed. This is done by removing the nuts and bolts securing the shaft to the control wheel universal on the control tee. On Model 182 aircraft (1962 and on), the control wheel can be removed from the control shaft by removing securing screws, thereby permitting removal of the shock panel with the control shaft installed.

b. Where Lord shock mount assemblies are used, the bolts securing the panel to the shock mounts must be removed. Note the combination of bolts, washers, ground straps and spacers used on each mount for correct replacement when the panel is reinstalled.

16-5A. ADDING EXTRA SHOCK MOUNTS. Service life of instruments is directly related to adequate shock-mounting of the panel. In some cases, particularly when additional instruments have been added in the field, the original shock-mounts are inadequate to support the increased weight of the panel. Installing additional shock mounts, when the instrument complement is increased, is a practical fix to prevent rapid deterioration of the mounts at the original locations.

16-6. INSTALLATION.

a. To install the shock-mounted panel, set it in place in the stationary panel, aligning the shock mounts with the holes in the panel, and install the nuts on the shock mount screws.

b. To install the shock-mounted panel where Lord shock mount assemblies are used, place the panel mounting screws and spacers in their proper positions, then position the panel, insert the screws in the mounts and install the nuts.

c. Replace the instruments and connect the wiring and plumbing. Position the decorative cover and press the retainer clips through the holes in the panel. A light coat of paraffin, beeswax or soap on the prongs of the retainer clips will make their insertion easier.

d. Install any previously removed control knobs and lock nuts. If the control wheel and control shaft were previously removed for complete removal of the shock panel and decorative cover, insert the control wheel and shaft through the shock-mounted panel and connect it to the universal on the control tee. Reinstall the control wheel on Model 182 aircraft (1962 and on).

16-7. INSTRUMENT REMOVAL. Most instruments are secured to the panel with screws inserted through the panel face, under the decorative cover. To remove an instrument, remove the decorative cover (if necessary), disconnect the plumbing or wiring to the instrument concerned, remove the retainer screws and take the instrument out from behind. Some instruments installed on the stationary panel can be removed if desired without removing the decorative cover; the mounting screws for these instruments have jam nuts so that the instrument retainer nuts may be removed and replaced without holding the screw heads. Other instruments on the stationary panel are circumscribed with escutcheons. Instrument mounting screws in the corners of the escutcheons are accessible on the face of the panel; the retainer nuts are accessible from behind the instrument panel. The decorative cover need not be removed to take out these instruments. The instrument cluster used on later models is installed as a unit, secured by a screw on each end of the cluster. The cluster must be removed from the panel to replace an individual gage.

NOTE

In some later model airplanes, the instrument cluster is located directly above the glove box. Removal of the cluster will be simpler if the glove box is removed first. The box is attached with screws just inside the box opening.

In all cases when an instrument is removed, the lines or wires disconnected from it should be protected. Cap open lines and cover pressure connections on the instrument, to prevent thread damage and the entrance of foreign matter. Wire terminals should be insulated or tied up so they will not ground accidentally, or short-circuit on another terminal.

16-8. INSTRUMENT INSTALLATION. Generally, installation procedure is the reverse of the removal procedure. Make sure mounting screw nuts are tightened firmly, but do not overtighten them, particularly on instruments having plastic cases. The same rule generally applies to connecting plumbing and wiring. If thread lubricant or sealer is used on plumbing, it should be applied sparingly and only on the male threads. When replacing an electrical gage in an instrument cluster assembly avoid bending the pointer or dial plate. Distortion of the dial or back plate could change calibration of the gages.

16-9. PITOT AND STATIC SYSTEMS.

16-10. The pitot and static systems are systems of metal or plastic tubing which convey ram air pressure and atmospheric pressure to the air speed and vertical speed indicators and the altimeter. Ram pressure picked up by the pitot tube on the leading edge of the left wing is transmitted to the airspeed

indicator by tubing running through the wing leading edge to the cabin, then down the left forward doorpost and forward to the instrument panel. Atmospheric pressure for the airspeed and vertical speed indicators and the altimeter is picked up by static pressure ports on the fuselage and transmitted through tubing to the instruments. Two general system layouts are used on Cessna single-engine airplanes. The 150, 172, and 175 series have single static ports on the left side of the fuselage and a simple metal pitot tube projecting down and forward from the left wing leading edge. Late model aircraft of these series have static line sumps to collect condensation in the static system. The 180, 182 and 185 series use dual static ports, one on each side of the fuselage. Late models of these aircraft also have a static line sump adjacent to the static port. The pitot tubes in these series are enclosed in mast-type housings. Pitot heat installations are optional equipment on some airplanes. On the 150, 172 and 175 series, pitot heat is available when the standard metal pitot tube is replaced with a mast-type pitot tube containing a heating element. The mast-type tube is standard equipment on 180, 182 and 185 series and the addition of pitot heat to these aircraft is simply a matter of adding the heating element and the necessary wiring. The pitot heater is powered by the airplane's electrical system and controlled by a switch on the instrument panel. The pitot and static line plumbing shown in figure 16-2 is a typical factory installation. Several variations have been used in factory installations to accommodate optional instrumentation and other variations have been made in the field, while making custom installations. However, the servicing and maintenance procedures given here will apply in general to all these variations.

16-11. TROUBLE SHOOTING--PITOT-STATIC SYSTEM.

PROBABLE CAUSE	ISOLATION PROCEDURE	REMEDY
LOW OR SLUGGISH AIRSPEED INDICATION.		
Normal altimeter and vertical speed - Pitot tube deformed, leak or obstruction in pitot line.	Check alignment, test line for leaks or obstructions.	Straighten tube, repair or replace damaged line.
INCORRECT OR SLUGGISH RESPONSE.		
All three instruments - leaks or obstruction in static line.	Test line for leaks and obstructions.	Repair or replace line.

SHOP NOTES:

16-11A. TROUBLE SHOOTING -- AIRSPEED INDICATOR.

PROBABLE CAUSE	ISOLATION PROCEDURE	REMEDY
HAND FAILS TO RESPOND.		
Pitot pressure connection not properly connected to pressure line from pitot tube.	Test line and connection for leaks.	Repair or replace damaged line, tighten connections.
Pitot or static lines clogged.	Check line for obstructions.	Blow out lines.
INCORRECT INDICATION OR HAND OSCILLATES.		
Leak in pitot or static lines.	Test lines and connections for leaks.	Repair or replace damaged lines, tighten connections.
Defective mechanism.	Substitute known-good indicator and check reading.	Replace instrument.
Leaking diaphragm.	Substitute known-good indicator and check reading.	Replace instrument.
HAND VIBRATES.		
Excessive vibration.	Check panel shock mounts.	Replace defective shock mounts.
Excessive tubing vibration.	Check clamps and line connections for security.	Tighten clamps and connections, replace tubing with flexible hose.

16-11B. TROUBLE SHOOTING -- ALTIMETER.

PROBABLE CAUSE	ISOLATION PROCEDURE	REMEDY
INSTRUMENT FAILS TO OPERATE.		
Static line plugged.	Check line for obstructions.	Blow out lines.
Defective mechanism.	Substitute known-good altimeter and check reading.	Replace instrument.
INCORRECT INDICATION.		
Hands not carefully set.	Reset hands with knob.	
Leaking diaphragm.	Substitute known-good altimeter and check reading.	Replace instrument.
Pointers out of calibration.	Compare reading with known-good altimeter.	Recalibrate.
HAND OSCILLATES.		
Static pressure irregular.	Check lines for obstructions or leaks.	Blow out lines, tighten connections.
Leak in Airspeed or Vertical Speed Indicator installations.	Check other instruments and system plumbing for leaks and obstructions.	Blow out lines, tighten connections.

16-11C. TROUBLE SHOOTING -- VERTICAL SPEED INDICATOR.

PROBABLE CAUSE	ISOLATION PROCEDURE	REMEDY
INSTRUMENT FAILS TO OPERATE.		
Static line plugged.	Check line for obstructions.	Blow out lines.
Static line broken.	Check line for damage, connections for security.	Repair or replace damaged line, tighten connections.
INCORRECT INDICATION.		
Partially plugged static line.	Check line for obstructions.	Blow out lines.
Ruptured diaphragm.	Substitute known-good indicator and check reading.	Replace instrument.
Pointer off zero.	Reset pointer to zero.	
POINTER OSCILLATES.		
Partially plugged static line.	Check line for obstructions.	Blow out lines.
Leak in static line.	Test lines and connections for leaks.	Repair or replace damaged lines, tighten connections.
Leak in instrument case.	Substitute known-good indicator and check reading.	Replace instrument.
HAND VIBRATES.		
Excessive vibration.	Check shock mounts.	Replace defective shock mounts.
Defective diaphragm.	Substitute known-good indicator and check for vibration.	Replace instrument.

16-11D. TROUBLE SHOOTING -- PITOT-STATIC HEAD.

PROBABLE CAUSE	ISOLATION PROCEDURE	REMEDY
TUBE DOES NOT HEAT OR CLEAR ICE.		
Switch turned "OFF."	Turn switch "ON."	
Blown fuse or circuit breaker.	Check fuse or circuit breaker.	Replace or reset.
Break in wiring.	Test for open circuit.	Repair wiring.
Heating element burned out.	Check resistance of heating element.	Replace element.
HANDS OSCILLATE OR INDICATE INCORRECTLY ON PITOT-STATIC INSTRUMENTS.		
Leak in pitot and static lines.	Test lines and connections for leaks.	Repair or replace damaged lines, tighten connections.
Leak in case of individual instrument.	Substitute known-good indicator and check reading.	Replace instruments.

16-12. PITOT AND STATIC SYSTEM MAINTENANCE. Proper maintenance of the pitot and static system is essential for the proper operation of the altimeter, and vertical speed and airspeed indicators. Leaks, moisture and obstructions in the pitot system will result in false airspeed indications, while static system malfunctions will affect the readings of all three instruments. Under instrument flight conditions, these instrument errors could be hazardous. Cleanliness and security are the principal rules for pitot and static pressure system maintenance. Both the pitot tube and the static ports must be kept clean and unobstructed.

16-13. ALIGNING PITOT TUBE. For correct airspeed indications the pitot tube on the 150, 172 and 175 series must be properly aligned, so that the open end of the tube is perpendicular to the vertical axis and parallel to the longitudinal axis of the airplane. For the 172 and 175, a template like the one shown in figure 16-3 will prove the most convenient means of checking this alignment. Fit the template over the wing leading edge and bend the tube if necessary so that its contour falls along the pitot tube line on the template. The tube should parallel a straightedge placed along the row of wing rib rivets just outboard of the tube. The pitot tube on the 150 likewise should parallel the row of wing rib rivets. Its contour should be checked with a template made to the pattern in figure 16-4. The template fits over the leading edge of the wing and the pitot tube should parallel one of the straight lines on the template. Both illustrations of pitot tube contour templates have been drawn carefully to actual size, so that they may be traced directly on a sheet of stiff plastic, plywood or metal. Place a piece of carbon paper between the printed page and the template material and trace the contours.

16-14. CHECKING FOR LEAKS. To check the pitot system for leaks, fasten a piece of rubber or plastic tubing over the pitot tube, close the opposite end of the tubing and slowly roll up the tube until the airspeed indicator registers in the cruise range. Secure the tube and after a few minutes recheck the airspeed indicator. Any leakage will have reduced the pressure in the system, resulting in a lower airspeed indication. Slowly unroll the tubing before removing it, so the pressure is reduced gradually. Otherwise the instrument may be damaged. If the test reveals a leak in the system, check all connections for tightness. On some airplanes, the pitot system includes a rubber hose connection at the wing root rib. Pay particular attention to this connection when checking the system for security; if the hose shows signs of deterioration, replace it.

16-15. BLOWING OUT PITOT LINES. Although the pitot system is designed to drain down to the pitot tube opening, condensation may collect at other points in the system and produce a partial obstruction. To clear the line, disconnect it at the airspeed indicator and, using low pressure air, blow from the indicator end of the line toward the pitot tube.

CAUTION

Never attach an air line to the pitot tube, or blow through it toward the airspeed indicator. Doing so may damage the indicator.

Like the pitot lines, the static pressure lines must be kept clear and the connections tight. Later model airplanes have static source sumps that collect moisture and keep the system clear. However, when necessary on any model, disconnect the static line at the first instrument to which it is connected, then blow the line clear with low-pressure air.

CAUTION

Never blow out the lines while any instrument is connected to them.

Check all static pressure line connections for tightness. If hoses or hose connections are used, check them for general condition and their clamps for security. Replace hoses which have cracked, hardened or show other signs or deterioration.

16-16. REMOVAL OF PITOT AND STATIC PRESSURE SYSTEM. To remove the pitot mast on models with this type system, remove the four mounting screws on the side of the attaching connector and pull the mast out of the connector far enough to disconnect the pitot line. Electrical connections to the heater assembly (if installed) may be disconnected through the wing access opening just inboard of the mast. On airplanes having the simple metal pitot tube, the tube connection is accessible through the access hole just inboard of the pitot tube. To remove the pitot tube, disconnect the fitting and pull the tube out of the wing through the access hole. The pitot and static lines are removed in the usual manner, after removing the wing access openings, lower wing fairing strip, decorative cover over the left doorpost, and when necessary, the left forward upholstery panel. Reinstallation of the wing line will be simpler if a guide wire is drawn in as the line is removed from the wing. The wing line may be removed intact by drawing it out through the cabin and right cabin door.

16-17. REPLACEMENT OF PITOT AND STATIC PRESSURE SYSTEM. When replacing components of the pitot and static pressure systems, use anti-seize compound sparingly on the male threads on both metal and plastic connections. Avoid excess compound which might enter the lines. Tighten connections firmly, but avoid overtightening and distorting the fittings. If twisting of plastic tubing is encountered when tightening the fittings, VV-P-236 or USP Petrolatum may be applied sparingly between the tubing and fittings.

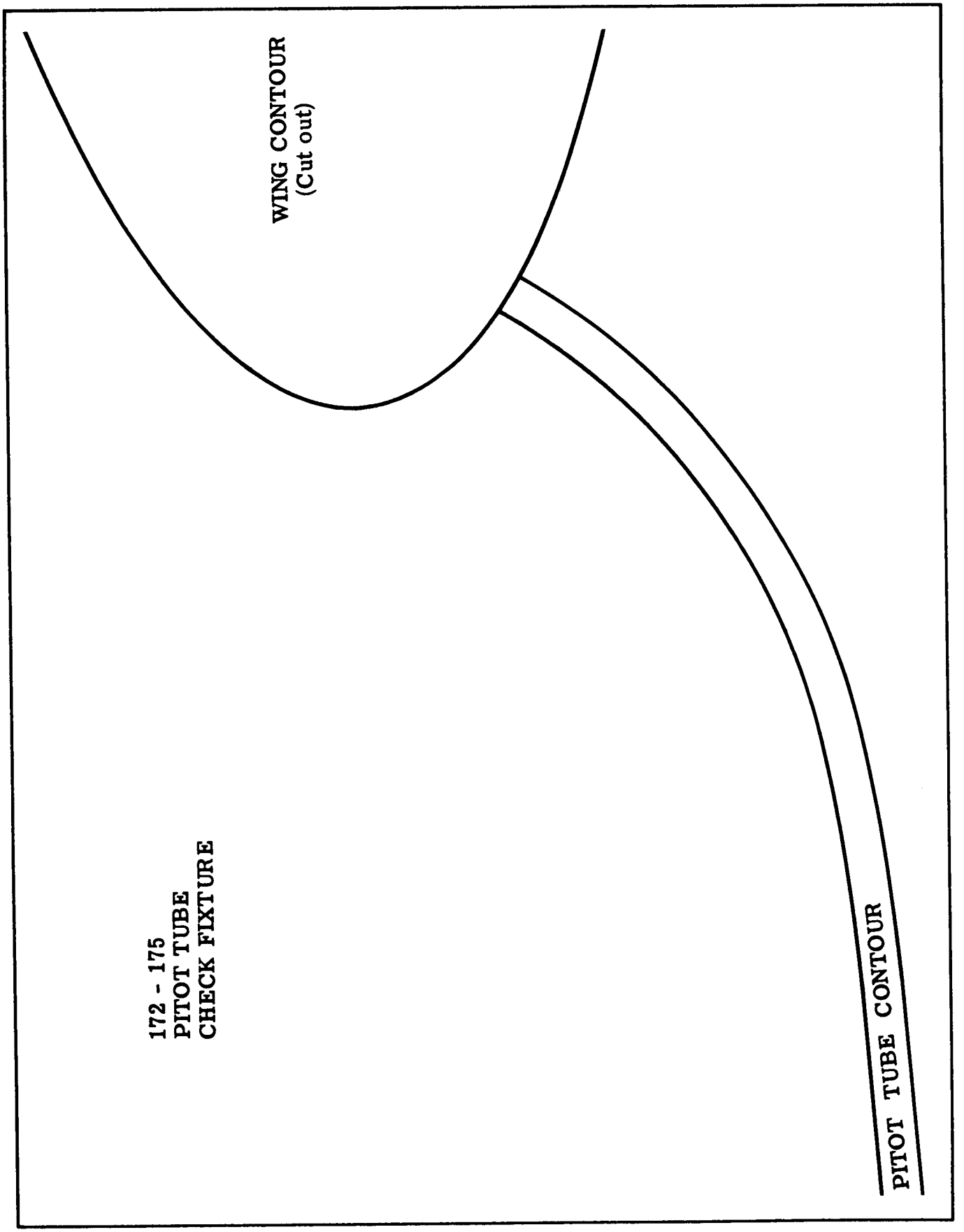

Figure 16-3. Pitot Tube Alignment Template - Models 172 and 175

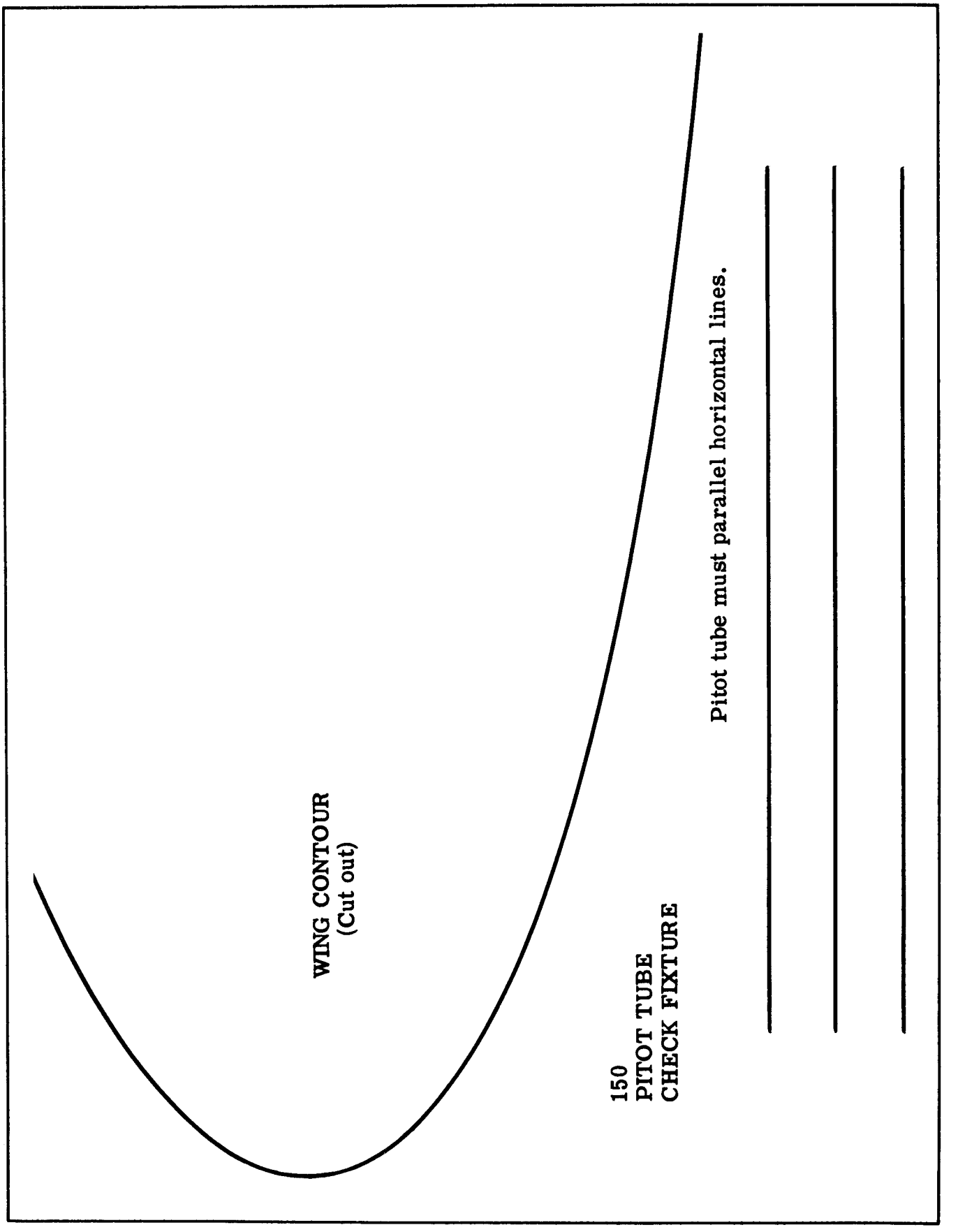

Figure 16-4. Pitot Tube Alignment Template - Model 150

16-18. VACUUM SYSTEMS.

16-19. Suction to operate directional gyro and gyro horizon instruments is provided by a single or dual venturi system, or by an engine driven vacuum pump. Model 172 airplanes, except the Skyhawk, have no provision for mounting a vacuum pump, therefore these aircraft utilize dual venturis or one larger single venturi to provide suction. All other aircraft have vacuum pump provisions. Except for the suction source, the two systems are similar. The engine-driven vacuum system uses a vacuum pump mounted on the engine accessory case or the engine case. The pump is gear-driven through a spline-type coupling. The vacuum pump discharge is through an oil separator, where the oil, which passes through the pump and lubricates it, is returned to the engine sump and the air is expelled overboard. A suction relief valve to control system pressure is connected between the pump inlet and the instruments. In the cabin, the vacuum line runs from the two gyro instruments, connected in parallel, through the firewall to the relief valve. A suction gage, mounted on the instrument panel, connects to one or both of the gyro instruments to indicate suction at the gyros. On some models, the suction gage is connected to a vacuum-test selector valve, which in turn is connected to each gyro and indicates suction at either gyro. On aircraft having an optional pictorial gyro horizon and azimuth card directional gyro, a suction gage is not installed. The suction gage is unnecessary since the gyro horizon incorporates two lights used for vacuum warning of high or low suction. A vacuum lights test switch in the system provides a means of testing the lights electrically. Venturi tubes for the 172 vacuum system are mounted on the fuselage just forward of the right landing gear spring. The suction relief valve is installed in the vertical run of the suction line.

16-20. TROUBLE SHOOTING -- VACUUM SYSTEM.

PROBABLE CAUSE	ISOLATION PROCEDURE	REMEDY
HIGH SUCTION GAGE READINGS.		
Gyros function normally - Relief valve screen clogged, relief valve malfunction.	Check screen, then valve. Compare gage readings with new gage.	Clean screen, reset valve. Replace gage.
NORMAL SUCTION GAGE READING, SLUGGISH OR ERRATIC GYRO RESPONSE.		
Instrument air filters clogged.	Check operation with filters removed.	Replace filters.
LOW SUCTION GAGE READINGS.		
Leaks or restriction between instruments and relief valve, relief valve out of adjustment, defective pump or venturi, restriction in oil separator or pump discharge line.	Check lines for leaks, check pump discharge volume, disconnect and test pump.	Repair or replace lines, adjust or replace relief valve, repair or replace pump or venturi, clean oil separator.
SUCTION GAGE FLUCTUATES.		
Defective gage or sticking relief valve.	Check suction with test gage.	Replace gage. Clean sticking valve with Stoddard solvent. Blow dry and test. If valve sticks after cleaning, replace it.
OIL COMES OVER IN PUMP DISCHARGE LINE.		
Oil separator clogged, oil return line obstructed, excessive oil flow through pump.	Check oil separator, return line. Check that pump oil return rate does not exceed 120 cc/hour (approx. 8 drops/minute), at 50 psi oil pressure.	Clean oil separator in Stoddard solvent, blow dry. Blow out lines. If pump oil consumption is excessive, replace oil metering collar and pin in pump.

16-20A. TROUBLE SHOOTING -- GYRO HORIZON.

PROBABLE CAUSE	ISOLATION PROCEDURE	REMEDY
HORIZON BAR FAILS TO RESPOND.		
Air filter dirty (high vacuum indication).	Check filter.	Clean or replace filter.
Suction relief valve improperly adjusted.		Adjust or replace relief valve.
Faulty suction gage.	Substitute known-good suction gage and check gyro response.	Replace suction gage.
Vacuum pump or venturi failure.	Check pump or venturi.	Replace pump or venturi.
Vacuum line kinked or leaking.	Check lines for damage and leaks.	Repair or replace damaged lines, tighten connections.
HORIZON BAR DOES NOT SETTLE.		
Defective mechanism.	Substitute known-good gyro and check indication.	Replace instrument.
Insufficient vacuum.		Adjust or replace relief valve.
Excessive vibration.	Check panel shock mounts.	Replace defective shock mounts.
HORIZON BAR OSCILLATES OR VIBRATES EXCESSIVELY.		
Air filter dirty (high vacuum indication).	Check filter.	Clean or replace filter.
Suction relief valve improperly adjusted.		Adjust or replace relief valve.
Faulty suction gage.	Substitute known-good suction gage and check gyro indication.	Replace suction gage.
Defective mechanism.	Substitute known-good gyro and check indication.	Replace instrument.
Excessive vibration.	Check panel shock mounts.	Replace defective shock mounts.
EXCESSIVE DRIFT IN EITHER DIRECTION.		
Air filter dirty (high vacuum indication).	Check filter.	Clean or replace filter.
Low vacuum, relief valve improperly adjusted.		Adjust or replace relief valve.
Faulty suction gage.	Substitute known-good suction gage and check gyro indication.	Replace suction gage.
Vacuum pump or venturi failure.	Check pump or venturi.	Replace pump or venturi.
Vacuum line kinked or leaking.	Check lines for damage and leaks.	Repair or replace damaged lines, tighten connections.

PROBABLE CAUSE	ISOLATION PROCEDURE	REMEDY
DIAL SPINS IN ONE DIRECTION CONTINUOUSLY.		
Operating limits have been exceeded.		Cage and reset when airplane is level.
Defective mechanism.	Substitute known-good gyro and check indication.	Replace instrument.

16-20B. TROUBLE SHOOTING -- VACUUM PUMP.

PROBABLE CAUSE	ISOLATION PROCEDURE	REMEDY
EXCESSIVE OIL IN DISCHARGE.		
Excessive flow to pump.	Check pump vent plugs.	Clean vent plugs.
Clogged oil separator.	Check separator for obstructions.	Clean separator.
Damaged engine drive seal.		Replace gasket.
HIGH SUCTION.		
Suction relief valve screen clogged.	Check screen for obstructions.	Clean or replace screen.
LOW SUCTION.		
Relief valve leaking.		Replace relief valve.
Vacuum pump failure.	Substitute known-good pump and check pump suction.	Replace vacuum pump.
LOW PRESSURE.		
Safety valve leaking.		Replace safety valve.
Vacuum pump failure.	Substitute known-good pump and check pump pressure.	Replace vacuum pump.

16-20C. TROUBLE SHOOTING -- VACUUM SWITCH (TYPE 34B GYRO HORIZON).

PROBABLE CAUSE	ISOLATION PROCEDURE	REMEDY
FALSE INDICATION FROM "HI" AND "LO" VACUUM INDICATOR LIGHTS.		
Leakage of pressure through switch connection.	Check connection for security.	Tighten loose connection.
Leaking switch diaphragm.		Replace switch.
Bent or loose contacts.		Replace switch.
INDICATOR LIGHT FAILURE.		
Diaphragm does not return to normal position.		Replace switch.
Loose electrical connections.	Check all connections for security.	Tighten all connections.
Worn or corroded switch contact points.		Replace switch.
Bulb burned out.	Test lights with vacuum lights test switch.	Install new bulb.

16-21. VACUUM SYSTEM REMOVAL. The various components of the vacuum system are secured by conventional clamps, mounting screws and nuts. To remove a component, remove the mounting screws and disconnect the inlet and discharge lines.

16-22. VACUUM SYSTEM REPLACEMENT. When replacing a vacuum system component, make sure connections are made correctly. Use thread lubricant sparingly and only on male threads. Avoid over-tightening connections. Before reinstalling a vacuum pump, probe the oil passages in the pump and engine, to make sure they are open. Place the mounting pad gasket in position over the studs and make sure it does not block the oil passages. Coat the pump drive splines lightly with a high-temperature grease such as Dow Silicone #30 (Dow-Corning Co., Midland, Mich.). After installing the pump, before connecting the plumbing, start the engine and hold a piece of paper over the pump discharge to check for proper lubrication. Proper oil flow through the pump is one to four fluid ounces per hour.

16-23. VACUUM SYSTEM CLEANING. In general, low-pressure, dry compressed air should be used in cleaning vacuum system components removed from the airplane.

CAUTION

Never apply compressed air to lines or components installed in the airplane. The excessive pressures will damage the gyro instruments. If an obstructed line is to be blown out, disconnect it at both ends and blow from the instrument panel out.

Components such as the oil separator and suction relief valve which are exposed to engine oil and dirt should be washed with Stoddard solvent, then dried with a low-pressure air blast. Check hoses for collapsed inner liners as well as external damage.

16-23A. SUCTION GAGE READINGS. On aircraft equipped with an engine-driven vacuum pump, a suction of 4.5 inches of mercury is desirable for gyro instruments. However, a range of 3.75 to 5.0 inches of mercury is considered acceptable. Model 172 aircraft, except the Skyhawk, have no provision for mounting a vacuum pump, therefore these aircraft utilize dual venturis or one larger single venturi to provide suction. The suction range for a venturi installation is 3.8 to 4.2 inches of mercury. On aircraft having a pictorial gyro horizon, the gyro horizon vacuum indicator lights show high or low vacuum. The light which warns of low vacuum illuminates at 3.5 inches of mercury; the light indicating high vacuum illuminates at 5.0 inches of mercury. Neither light is on when vacuum is between 3.5 and 5.0 inches of mercury.

NOTE

THIS IS A TYPICAL ENGINE-DRIVEN VACUUM SYSTEM. VARIATIONS BETWEEN MODELS INCLUDE PUMP LOCATION, ROUTING, PLUMBING TYPE OIL SEPARATOR USED, AND WHETHER A VACUUM-TEST SELECTOR VALVE IS USED. SOME AIRCRAFT MAY USE A GYRO HORIZON HAVING VACUUM INDICATOR LIGHTS INSTEAD OF A SEPARATE SUCTION GAGE. SEE FIGURE 16-6 FOR MODEL 172 VENTURI INSTALLATION.

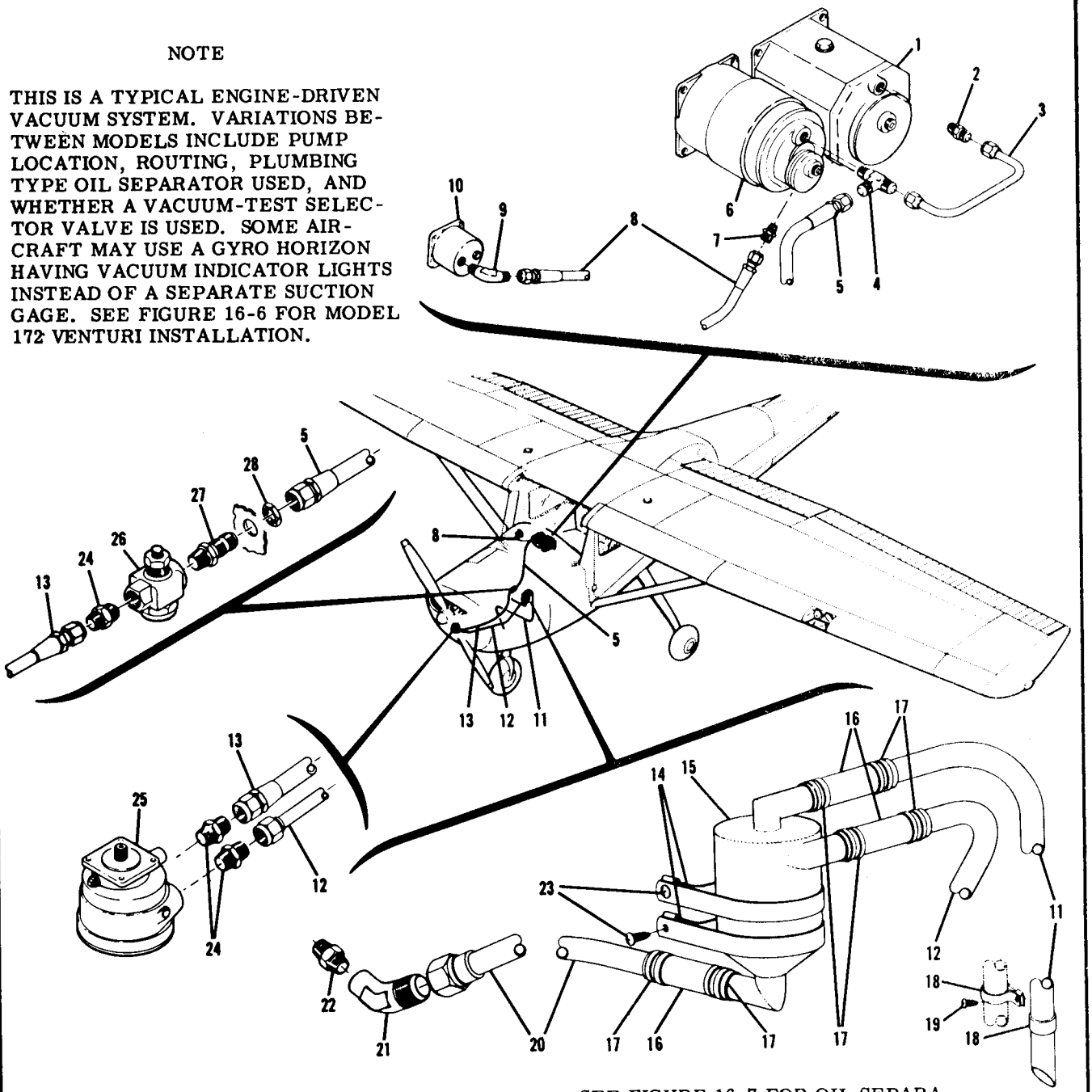

SEE FIGURE 16-7 FOR OIL SEPARATOR USED ON SOME MODELS.

1. Directional Gyro
2. Nipple
3. Line (Gyro to Gyro)
4. Tee
5. Hose (Gyro to Firewall)
6. Horizontal Gyro
7. Nipple
8. Hose (Gage to Gyro)
9. Elbow
10. Suction Gage
11. Vent Tube
12. Line (Pump to Oil Separator)
13. Hose (Valve to Vacuum Pump)
14. Clamp
15. Oil Separator
16. Hose
17. Hose Clamp
18. Clamp
19. Screw
20. Line (Oil Separator to Engine)
21. Elbow
22. Nipple
23. Screw
24. Nipple
25. Vacuum Pump
26. Relief Valve
27. Firewall Fitting
28. Nut

Figure 16-5. Typical Engine-Driven Vacuum System

NOTE

THIS IS A TYPICAL VENTURI INSTALLATION FOR EARLY MODEL 172 AIRCRAFT. LATER MODELS, EXCEPT THE SKYHAWK WHICH HAS VACUUM PUMP PROVISIONS, USE A SINGLE SUPER VENTURI AND A SLIGHTLY DIFFERENT PLUMBING ARRANGEMENT.

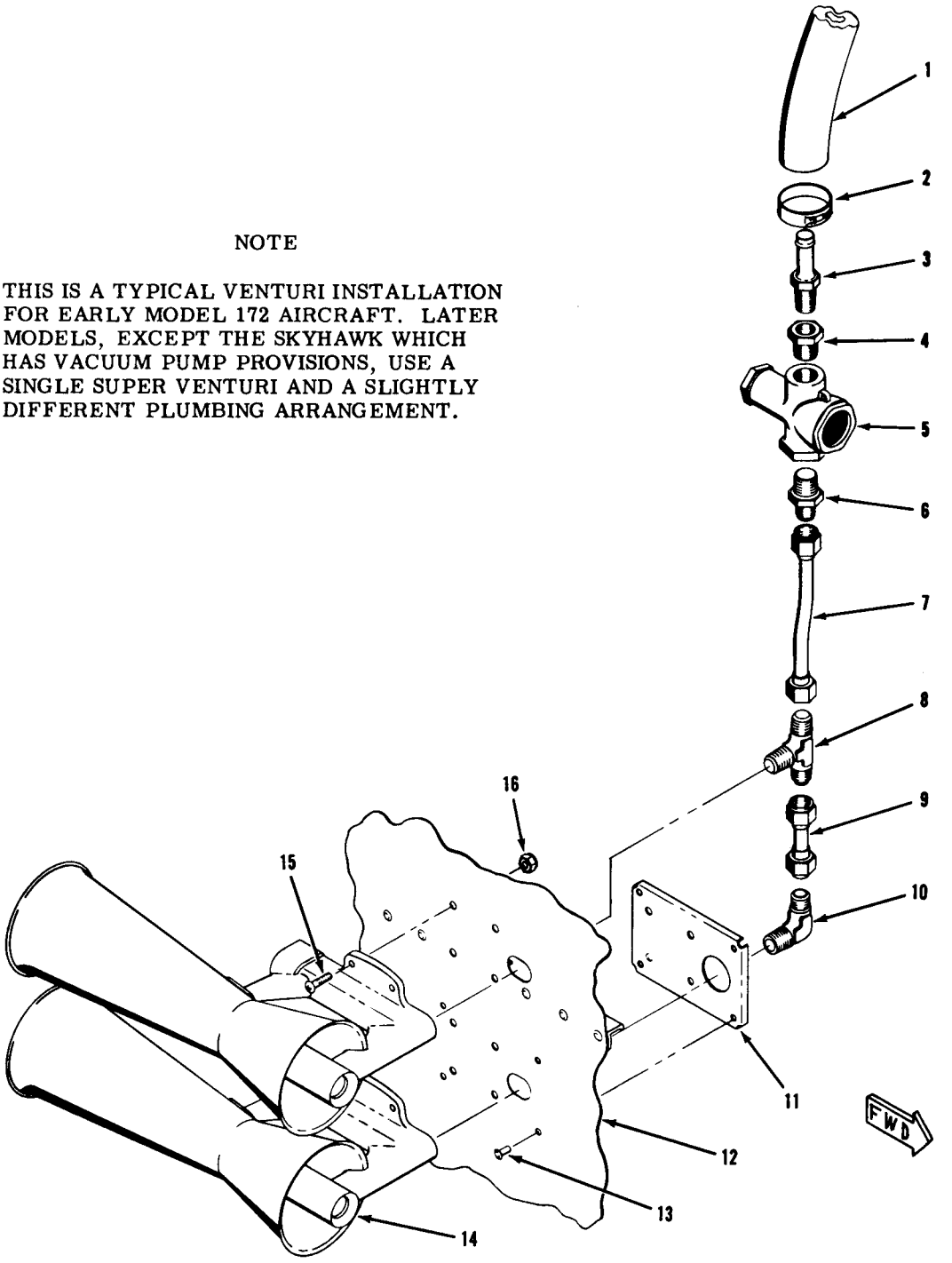

1. Hose
2. Clamp
3. Adapter
4. Bushing
5. Relief Valve
6. Nipple
7. Line
8. Tee
9. Line
10. Elbow
11. Stiffener
12. Fuselage Skin
13. Rivet
14. Venturi Tube
15. Screw
16. Nut

Figure 16-6. Venturi Installation

NOTE

THIS TYPE OIL SEPARATOR USED ON SOME MODELS, THE TYPE SHOWN IN FIGURE 16-5 USED ON OTHERS.

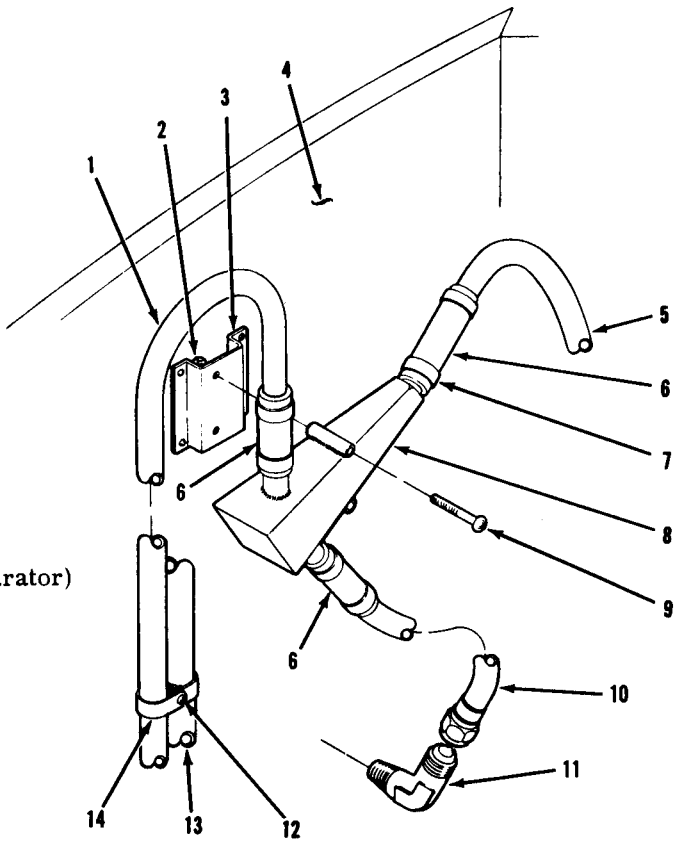

1. Vent Line
2. Nut
3. Bracket
4. Engine Baffle
5. Line (Vacuum Pump to Separator)
6. Hose
7. Clamp
8. Oil Separator
9. Screw
10. Line (Oil Return)
11. Elbow
12. Screw and Nut
13. Engine Breather Line
14. Clamp

Figure 16-7. Oil Separator

SHOP NOTES:

16-24. ENGINE INDICATORS.

16-25. TACHOMETER. The tachometers used on Cessna single-engine aircraft are mechanical indicators driven at half crankshaft speed by flexible shafts. Most tachometer difficulties will be found in the drive-shaft. To function properly, the shaft housing must be free of kinks, dents and sharp bends. There should be no bend on a radius shorter than six inches, and no bend within three inches of either terminal. If a tachometer is noisy or the pointer oscillates, check the cable housing for kinks, sharp bends and damage. Disconnect the cable at the tachometer and pull it out of the housing. Check the cable for worn spots, breaks and kinks.

NOTE

A kink may be detected by holding the cable vertically by one end and slowly rotating it between the fingers to feel for binding and jumpy motion.

Before replacing a tachometer cable in the housing, coat the lower two thirds with AC Type ST-640 Speedometer cable grease or Lubriplate No. 110. Insert the cable in the housing as far as possible, then slowly rotate it to make sure it is seated in the engine fitting. Insert the cable in the tachometer, making sure it is seated in the drive shaft, and reconnect the housing.

16-26. MANIFOLD PRESSURE GAGE. The manifold pressure gage is a barometric instrument which indicates the absolute pressure in the intake manifold in inches of mercury; thus, with the engine stopped or at sudden full throttle and maximum rpm, it will register approximately the ambient barometric pressure.

16-26A. TROUBLE SHOOTING -- MANIFOLD PRESSURE GAGE.

PROBABLE CAUSE	ISOLATION PROCEDURE	REMEDY
EXCESSIVE ERROR AT EXISTING BAROMETRIC PRESSURE.		
Pointer shifted.		Replace instrument.
Leak in vacuum bellows.		Replace instrument.
Loose pointer.		Replace instrument.
Leak in pressure line.	Test line and connections for leaks.	Repair or replace damaged line, tighten connections.
Condensate or fuel in line.	Check line for obstructions.	Blow out line.
JERKY MOVEMENT OF POINTER.		
Excessive internal friction.		Replace instrument.
Rocker shaft screws tight.		Replace instrument.
Link springs too tight.		Replace instrument.
Dirty pivot bearings.		Replace instrument.
Defective mechanism.		Replace instrument.
Leak in pressure line.	Test line and connections for leaks.	Repair or replace damaged line, tighten connections.
SLUGGISH OPERATION OF POINTER.		
Foreign matter in line.	Check line for obstructions.	Blow out line.
Damping needle dirty.		Replace instrument.
Leak in pressure line.	Test line and connections for leaks.	Repair or replace damaged line, tighten connections.

PROBABLE CAUSE	ISOLATION PROCEDURE	REMEDY
EXCESSIVE POINTER VIBRATION.		
Tight rocker pivot bearings.		Replace instrument.
Excessive panel vibration.	Check panel shock mounts.	Replace defective shock mounts.
IMPROPER CALIBRATION.		
Faulty mechanism.		Replace instrument.
NO POINTER MOVEMENT.		
Faulty mechanism.		Replace instrument.
Broken pressure line.	Check line and connections for breaks.	Repair or replace damaged line.

16-27. CYLINDER HEAD TEMPERATURE GAGES. Two types of cylinder head temperature gages are used in the various models, the thermocouple-powered type and the electrical-powered bulb type gage. Spark plug gasket thermocouples provide power to the thermocouple-type gages; cylinder head temperature bulbs regulate power to electrical system powered gages. On thermocouple-type installations, the length of the thermocouple leads is important; shortening or lengthening the wires will alter circuit resistance and cause erroneous gage indication.

SHOP NOTES:

16-28. TROUBLE SHOOTING -- CYLINDER HEAD TEMPERATURE GAGES.

PROBABLE CAUSE	ISOLATION PROCEDURE	REMEDY
GAGE INOPERATIVE.		
No current to circuit (bulb-type).	Check circuit breaker, electrical circuit to gage.	Repair electrical circuit.
Defective gage, thermocouple, bulb or circuit.	Isolate with ohmeter check of circuits.	Repair or replace defective item.
GAGE READS HIGH (THERMOCOUPLE-TYPE CIRCUIT).		
Shortened thermocouple lead. (Resistance too low.)	Check with ohmeter. Total resistance through lead and thermocouple should be 2 ohms.	Replace defective parts with Cessna lead.
GAGE READS LOW (THERMOCOUPLE TYPE CIRCUIT).		
Too long a lead, or defective lead or thermocouple.	Check resistance as above.	Replace defective parts with Cessna parts.
GAGE FLUCTUATES RAPIDLY (BULB-TYPE CIRCUIT).		
Loose or broken wire permitting alternate make and break of gage current.	Inspect circuit wiring.	Repair or replace defective wire.
GAGE READS TOO HIGH ON SCALE (BULB-TYPE CIRCUIT).		
High voltage.		Check "A" terminal.
Gage off calibration.		Replace instrument.
GAGE READS TOO LOW ON SCALE (BULB-TYPE CIRCUIT).		
Low voltage.		Check voltage supply and "D" terminal.
Gage off calibration.		Replace instrument.
GAGE READS OFF SCALE AT HIGH END (BULB-TYPE CIRCUIT).		
Break in bulb.		Replace instrument.
Break in bulb leads.		Replace instrument.
Internal break in gage.		Replace instrument.
OBVIOUSLY INCORRECT READING (BULB-TYPE CIRCUIT).		
Defective gage mechanism.		Replace instrument.
Incorrect calibration.		Replace instrument.

16-29. CYLINDER HEAD TEMPERATURE GAGE MAINTENANCE. The cylinder head temperature gage and thermocouple or bulb require no maintenance other than cleaning, making sure the lead is properly supported, and all connections are clean, tight, and properly insulated. To make sure the resistance in the thermocouple circuit matches the instrument calibration, always replace the gage, thermocouple, and lead with genuine Cessna parts of the correct number.

16-30. OIL PRESSURE GAGE. The Bourdon-type oil pressure gage used on some Cessna single-engine aircraft is a direct-reading gage, operated by a pressure pickup line connected to the engine main oil gallery.

16-30A. TROUBLE SHOOTING -- OIL PRESSURE GAGE (DIRECT-READING).

PROBABLE CAUSE	ISOLATION PROCEDURE	REMEDY
GAGE DOES NOT REGISTER.		
Pressure line clogged.	Check line for obstructions.	Clean line.
Pressure line broken.	Check line for leaks and damage.	Repair or replace damaged line.
Fractured Bourdon tube.		Replace instrument.
Gage pointer loose on staff.		Replace instrument.
Damaged gage movement.		Replace instrument.
GAGE POINTER FAILS TO RETURN TO ZERO.		
Foreign matter in line.	Check line for obstructions.	Clean line.
Foreign matter in Bourdon tube.		Replace instrument.
Bourdon tube stretched.		Replace instrument.
GAGE DOES NOT REGISTER PROPERLY.		
Faulty mechanism.		Replace instrument.
GAGE HAS ERRATIC OPERATION.		
Worn or bent movement.		Replace instrument.
Foreign matter in Bourdon tube.		Replace instrument.
Dirty or corroded movement.		Replace instrument.
Pointer bent and rubbing on dial, dial screw or glass.		Replace instrument.
Leak in pressure line.	Check line for leaks and damage.	Repair or replace damaged line.

16-31. ELECTRIC OIL PRESSURE GAGE. The electric oil pressure gage system used on some Cessna aircraft requires little maintenance other than routine cleaning and inspection of the wiring and connections. Good grounds between the sensing unit and the engine case, and between the instrument and the instrument panel, are essential to accurate readings. Since the ground connection to the engine is through the threads of the sensing unit, no thread lubricant or sealer should be used when a sensing unit is installed.

16-32. TROUBLE SHOOTING -- OIL PRESSURE GAGE (ELECTRIC).

PROBABLE CAUSE	ISOLATION PROCEDURE	REMEDY
INOPERATIVE GAGE.		
Blown fuse/circuit breaker out. Broken connection or lead, defective sensing unit, defective gage.	Check fuse/circuit breaker. Check for open circuit to isolate break.	Repair or replace defective wiring. Replace defective sensing unit or gage.
GAGE READS LOW.		
Poor electrical connection or ground at gage or sensing unit. Low bus voltage. Defective gage or sensing unit.	Check ground at gage and sensing unit. Check connections. Check bus voltage, substitute known-good gage or sensing unit.	Repair defective connections. Replace defective gage or sensing unit. Have voltage regulator adjusted.
GAGE READS HIGH.		
Excessive bus voltage; grounded lead to sensing unit; defective sensing unit or gage.	Check bus voltage. Check lead to sensing unit. Substitute known-good gage or sensing unit.	Have voltage regulator adjusted. Repair or replace lead. Replace gage or sensing unit.

16-33. OIL TEMPERATURE GAGE. The oil temperature gage is a Bourdon-type pressure instrument connected by armored capillary tubing to a temperature bulb in the engine. The temperature bulb, capillary tube, and gage are filled with fluid and sealed. Expansion and contraction of the fluid in the bulb with temperature changes operates the gage. Checking the capillary tube for damage and fittings for security is the only maintenance required. Since the tube's inside diameter is quite small, small dents and kinks which would be quite acceptable in larger tubing may partially or completely close off the capillary, making the gage inoperative.

16-34. CARBURETOR AIR TEMPERATURE GAGES. Both capillary-tube and electric carburetor air temperature gages have been used on Cessna single-engine aircraft. The capillary tube type is identical to the oil temperature gage except in range and the same maintenance procedures apply to both. The electric gage is of the resistance-bridge type, in which changes in the electrical resistance of the element in the sensing bulb, which occur with temperature changes, are indicated by a meter, its dial calibrated for temperature. The resistance system, unlike the thermocouple, requires current from the electrical system (aircraft's bus) and operates only when the master switch is on. The wire length in this type of installation, however, is not critical as it is with the thermocouple. Although both the instrument and the sensing bulb are grounded, two leads are used between them to avoid the possibility of instrument error introduced by poor electrical bonds in the airframe.

SHOP NOTES:

16-35. TROUBLE SHOOTING -- CARBURETOR AIR TEMPERATURE GAGE (ELECTRIC).

PROBABLE CAUSE	ISOLATION PROCEDURE	REMEDY
GAGE POINTER STAYS OFF LOW END OF SCALE.		
Blown fuse/circuit breaker out.	Check fuse/circuit breaker.	Replace fuse/reset circuit breaker.
Master switch "OFF" or switch defective.	Check switch "ON."	Replace defective switch.
Broken or grounded leads between gage and sensing unit.	Check circuit wiring.	Repair or replace defective wiring.
Defective gage or sensing unit.	Substitute known-good gage or sensing unit.	Replace gage or sensing unit.
GAGE POINTER GOES OFF HIGH END OF SCALE.		
Broken or grounded lead.	Check circuit wiring.	Repair or replace defective wiring.
Defective gage or sensing unit.	Substitute known-good gage or sensing unit.	Replace gage or sensing unit.
GAGE OPERATES INTERMITTENTLY.		
Defective master switch, broken or grounded lead.	Check circuit wiring.	Replace switch, repair or replace defective wiring.
Defective gage or sensing unit.	Substitute known-good gage or sensing unit.	Replace gage or sensing unit.
EXCESSIVE POINTER OSCILLATION.		
Loose or broken lead.	Check circuit wiring.	Repair or replace defective wiring.
Defective gage or sensing unit.	Substitute known-good gage or sensing unit.	Replace gage or sensing unit.
Excessive panel vibration.	Check panel shock mounts.	Replace defective shock mounts.
OBVIOUSLY INCORRECT TEMPERATURE READING.		
Defective gage or sensing unit.	Substitute known-good gage or sensing unit.	Replace gage or sensing unit.
POINTER FAILS TO GO OFF SCALE WITH CURRENT OFF.		
Defective master switch.		Replace switch.
Defective gage.	Substitute known-good gage.	Replace gage.

16-36. FUEL QUANTITY INDICATORS (ELECTRIC). Two types of electric fuel quantity indicators have been used in Cessna single-engine aircraft, the thermal type and the magnetic type.

NOTE

In the thermal type indicator, operation depends upon heating and cooling of a bimetal strip. Therefore, after the master switch is turned on, a warming period is required before the indicator needle will arrive at the fuel level reading. Also, the needle will require several seconds to readjust itself to the reading after any abrupt change in flight attitude of the airplane. In the magnetic type indicator, fuel level indication is instantaneous.

The fuel quantity indicators are used in conjunction with float-operated variable-resistance transmitters in the fuel tanks. The tank-full position of the transmitter is minimum resistance (33.5 ohms), permitting maximum current flow through the indicator and maximum pointer deflection. As the tank level drops, the resistance in the transmitter increases; the resulting drop in current produces a smaller pointer deflection. The maximum resistance (tank-empty position) of the transmitter is approximately 255 ohms.

16-37. TROUBLE SHOOTING -- FUEL QUANTITY INDICATORS (ELECTRIC).

PROBABLE CAUSE	ISOLATION PROCEDURE	REMEDY
FAILURE TO INDICATE.		
No power to indicator or transmitter. (Pointer stays below E)	Check fuse/circuit breaker, inspect for open circuit.	Replace fuse/reset breaker, repair or replace defective wire.
Grounded wire. (Pointer stays above F)	Check for partial ground between transmitter and gage.	Repair or replace defective wire.
Low voltage.	Check voltage at indicator.	Correct voltage.
Defective indicator.	Substitute known-good indicator.	Replace indicator.
OFF CALIBRATION.		
Defective indicator.	Check internal resistance of indicator; should be approximately 425 ohms.	Replace indicator.
Defective transmitter.	Check internal resistance of transmitter.	Recalibrate or replace.
Low or high voltage.	Check voltage at indicator.	Correct voltage.
STICKY OR SLUGGISH INDICATOR OPERATION.		
Defective indicator.	Substitute known-good indicator.	Replace indicator.
Low voltage.	Check voltage at indicator.	Correct voltage.
ERRATIC READINGS.		
Loose or broken wiring on indicator or transmitter.	Inspect circuit wiring.	Repair or replace defective wire.
Defective indicator or transmitter.	Substitute known-good indicator or transmitter.	Replace indicator or transmitter.
Defective master switch.		Replace switch.

16-38. TRANSMITTER CALIBRATION. While the chances of the transmitter's calibration changing in normal service are remote, it is possible to bend the float arm or stops while the transmitter is out of the tank, changing its calibration. A calibration check, therefore, is advisable before the transmitter is installed again.

Two types of transmitters have been installed in Cessna single-engine airplanes. The calibration of both types is identical except for the float arm travel. The older transmitters, with brass floats, should be set so the float travel is 3 inches to either side of the centerline, taking the measurement from the top of the float in the up (full) position and from the bottom of the float in the down (empty) position. Float travel is adjusted by bending the float arm stops. Transmitters having cellular rubber floats are calibrated in the same manner but the travel is 3 inches up and 2 inches down and the resistance of the unit should be 33.5±2 ohms in the up (full) position and 255±15 ohms in the down (empty) position.

16-39. FUEL FLOW INDICATOR. A fuel flow indicator is used with the Continental fuel injection system on Model 185 aircraft. The indicator is a fuel pressure gage calibrated to indicate the approximate gallons per hour of fuel being metered to the engine. It is operated by a pressure line from the fuel distributor manifold on the engine.

16-39A. TROUBLE SHOOTING -- FUEL FLOW INDICATOR.

PROBABLE CAUSE	ISOLATION PROCEDURE	REMEDY
DOES NOT REGISTER.		
Pressure line clogged.	Check line for obstructions.	Blow out line.
Pressure line broken.	Check line for leaks and damage.	Repair or replace damaged line.
Fractured bellows or damaged mechanism.		Replace instrument.
Clogged snubber orifice.		Replace instrument.
Pointer loose on staff.		Replace instrument.
POINTER FAILS TO RETURN TO ZERO.		
Foreign matter in line.	Check line for obstructions.	Blow out line.
Clogged snubber orifice.		Replace instrument.
Damaged bellows or mechanism.		Replace instrument.
INCORRECT OR ERRATIC READING.		
Damaged or dirty mechanism.		Replace instrument.
Pointer bent, rubbing on dial or glass.		Replace instrument.
Leak or partial obstruction in pressure line.	Check line for obstructions or leaks.	Blow out dirty line, repair or tighten loose connections.

16-40. MAGNETIC COMPASS. The magnetic compasses used in Cessna single-engine airplanes are liquid-filled, with expansion provisions to compensate for temperature changes. They are equipped with compensating magnets adjustable from the front of the case.

The compasses are individually-lighted by GE No. 330 lamps inside the compass case, controlled by the instrument lights rheostat switch. No maintenance is required on the compass except an occasional check on a compass rose with adjustment of the compensation, if necessary; and replacement of the lamp.

NOTE

Both 3-volt and 12-volt lamps have been used with the compass lights. Check the voltage on the old lamp before installing a replacement.

16-41. STALL WARNING HORN AND TRANSMITTER. (See paragraphs 17-46 through 17-49.)

16-42. TURN-AND-BANK INDICATOR. The turn-and-bank indicator used on Cessna single-engine aircraft is an electrically operated instrument. It is powered by the aircraft electrical system, and therefore, operates only when the master switch is on. Its electrical circuit is protected by an automatically-resetting circuit breaker.

16-43. TROUBLE SHOOTING -- TURN-AND-BANK INDICATOR.

PROBABLE CAUSE	ISOLATION PROCEDURE	REMEDY
INDICATOR POINTER FAILS TO RESPOND.		
Automatic resetting circuit breaker defective.	Check circuit breaker.	Replace circuit breaker.
Master switch "OFF" or switch defective.	Check switch "ON."	Replace defective switch.
Broken or grounded lead to indicator.	Check circuit wiring.	Repair or replace defective wiring.
Indicator not grounded.	Check ground wire.	Repair or replace defective wire.
Defective mechanism.		Replace instrument.
HAND SLUGGISH IN RETURNING TO ZERO.		
Defective mechanism.		Replace instrument.
Low voltage.	Check voltage at indicator.	Correct voltage.
POINTER DOES NOT INDICATE PROPER TURN.		
Defective mechanism.		Replace instrument.
HAND DOES NOT SIT ON ZERO.		
Gimble and rotor out of balance.		Replace instrument.
Hand incorrectly sits on rod.		Replace instrument.
Sensitivity spring adjustment pulls hand off zero.		Replace instrument.
IN COLD TEMPERATURES, HAND FAILS TO RESPOND OR IS SLUGGISH.		
Oil in indicator becomes too thick.		Replace instrument.
Insufficient bearing end play.		Replace instrument.
Low voltage.	Check voltage at indicator.	Correct voltage.
NOISY GYRO.		
High voltage.	Check voltage at indicator.	Correct voltage.
Loose or defective rotor bearings.		Replace instrument.

SECTION 17

ELECTRICAL SYSTEMS

TABLE OF CONTENTS

	Page
ELECTRICAL POWER SUPPLY SYSTEM	17-2
BATTERY AND EXTERNAL POWER SYSTEM	17-2
Battery	17-2
Trouble Shooting	17-2
Removal and Replacement	17-7
Cleaning the Battery	17-7
Adding Electrolyte or Water to the Battery	17-7
Charging the Battery	17-10
Battery Box	17-2
Removal and Replacement	17-10
Maintenance of Battery Box	17-10
Battery Solenoid	17-2
Removal and Replacement	17-10
Master Switch	17-2
Ground Service Receptacle	17-2
Removal and Replacement	17-10
GENERATOR POWER SYSTEM	17-10
Generator	17-11
Trouble Shooting	17-11
Removal and Replacement - Models 180, 182 and 185	17-12
Removal and Replacement of Standard Generator - Models 150, 172 and 175	17-12
Removal and Replacement of Heavy Duty Generator - Model 175	17-13
Polarizing the Generator	17-14
Voltage Regulator	17-11
Removal and Replacement	17-14
Generator Warning Light	17-11
Removal and Replacement	17-14
Ammeter	17-11
AIRCRAFT LIGHTING SYSTEM	17-14
Landing and Taxi Lights	17-14
Trouble Shooting	17-15
Removal and Replacement	17-16
Navigation Lights	17-14
Trouble Shooting	17-15
Removal and Replacement	17-16
Navigation Lights Flasher	17-14
Rotating Beacon	17-14
Trouble Shooting	17-16
Removal and Replacement	17-16
Interior Lights Console, Map Light and Dome Light	17-15
Trouble Shooting	17-16
Removal and Replacement of Dome and Instrument Lights	17-17
Adjustment of Overhead Light Console for Late 182 Models	17-17
Courtesy Lights	17-15
Trouble Shooting	17-16
Removal and Replacement	17-17
Compass and Radio Dial Lights	17-15
STALL WARNING CIRCUIT	17-24
PITOT AND STALL WARNING HEATER CIRCUITS	17-24
Removal and Replacement of Stall Warning Horn and Switch	17-24
Removal and Replacement of Pitot Heater	17-24
INDEX OF ELECTRICAL WIRING DIAGRAMS	17-25
SYMBOLS CHART	17-27

17-1. ELECTRICAL POWER SUPPLY SYSTEM.

17-2. Twelve-volt electrical systems are used on all single-engine models. An engine-driven generator supplies the normal source of power during flight and maintains a battery charge controlled by a voltage regulator. An external power source receptacle is offered as optional equipment on all models except the 150 to supplement the battery-generator system for ground operation.

17-3. BATTERY AND EXTERNAL POWER SYSTEM.

17-4. The battery and external power system consists of a battery, a battery solenoid, a master switch and an external power receptacle (optional equipment). The location of the battery and solenoid is in the tailcone on all models except the 172 series. The 172 model battery and solenoid are mounted on the firewall. No electrical power is supplied to the aircraft bus until the master switch is turned on. The master switch closes the battery solenoid, connecting the battery to the bus.

17-5. BATTERY. Multi-cell, wet-type batteries which have non-spill type filler caps are used on all models. The battery is installed in the tailcone on all models except the 172 where it is installed on the firewall. The battery capacity for the 150, 172 and 175 is 24 ampere-hours and 33 ampere-hours for all other models. All batteries are 12-volt and are housed in a battery box attached to the airframe. The battery on the 172 is accessible by removing the cowl. On other aircraft the battery may be serviced through the baggage door. Early models of the 175 have a removable panel on the side of the fuselage for battery access. The baggage compartment wall in the 150 must be removed for access to the battery.

17-6. BATTERY BOX. The battery is contained in either an aluminum or Royalite acid resistant box which is riveted to the aircraft structure. The battery is vented by a tube which attaches to the bottom of the battery box and extends downward thru the bottom of the fuselage. A battery box lid completely encloses the battery preventing any spillage of electrolyte or accumulation of battery gases inside the aircraft. Metal parts of the battery boxes are coated with an acid resistant paint.

17-7. BATTERY SOLENOID. The battery solenoid is bolted to the side of the battery box. It is a plunger type contactor which is actuated by turning the master switch on. When the master switch is off, the battery is disconnected from the electrical system. A silicon diode has been added to all late model aircraft to eliminate spiking of transistorized radio equipment. The large terminal of the diode connects to the battery terminal of the battery solenoid and the small terminal of the diode connects to the minus terminal of the solenoid coil. The minus terminal of the solenoid coil is the small terminal that the master switch wire connects to. See figure 17-4 for pictorial installation of battery solenoid and diode.

17-8. MASTER SWITCH. Operation of the battery and generator power system for all models except late 182 models, is controlled by a push-pull type switch located on the instrument panel. On late 182 models, the master switch is a rocker type switch located on the instrument panel. Both switches are double pole, single throw. When the master switch is turned on, the battery solenoid closes, connecting the battery to the electrical system. The switch also completes the generator field circuit.

17-9. GROUND SERVICE RECEPTACLE. The ground service receptacle is either located in the cowl area or the baggage compartment area. A 12-volt battery cart or ground service generator may be plugged into the unit for operation of the electrical and radio equipment on the ground.

17-10. TROUBLE SHOOTING THE BATTERY SYSTEM.

PROBABLE CAUSE	ISOLATION PROCEDURE	REMEDY
BATTERY DOES NOT SUPPLY POWER TO BUS WHEN MASTER SWITCH IS ON.		
Dead battery.	Check specific gravity of electrolyte. Gravity reading should be at least 1.256 which indicates a 75% charge at normal temperature.	Replace or charge battery. Check charging rate of generator.
Defective master switch, battery solenoid or wiring.	Short the battery solenoid terminal that is wired to the master switch to ground. If the solenoid does not operate, check the jumper wire connecting the solenoid coil to the "hot" solenoid terminal.	Repair wiring. Check master switch. Replace solenoid.
Faulty battery cable.	Inspect the battery cables for good connection.	Replace cable. Clean and reconnect.

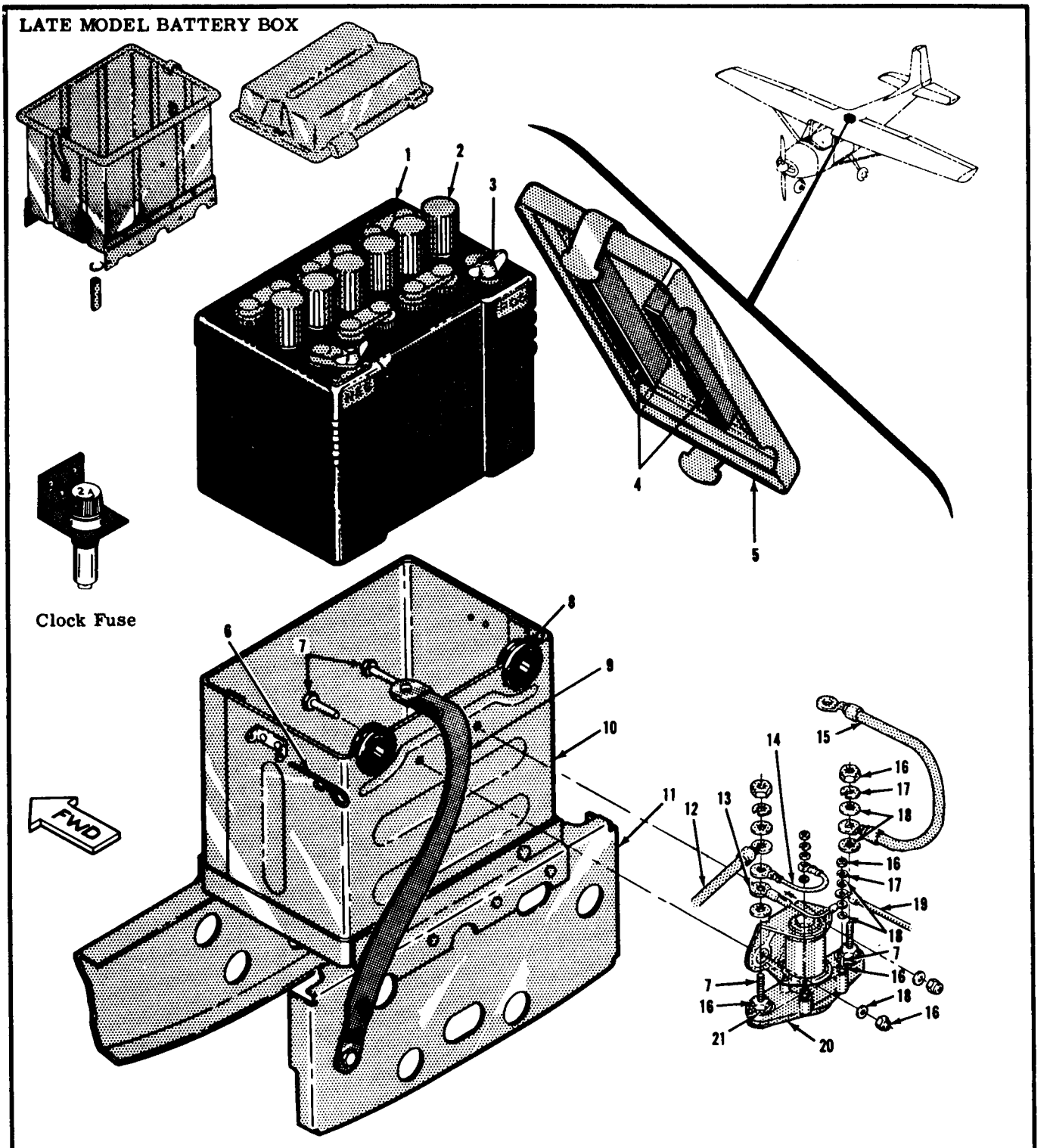

1. Battery
2. Filler Cap
3. Wing Nut
4. Insulators
5. Battery Box Lid
6. Spring Clip
7. Bolt
8. Grommet
9. Ground Strap
10. Battery Box
11. Mounting Bracket
12. Starter Cable
13. Diode Assembly
14. Jumper Wire
15. Power Cable
16. Nut
17. Lockwasher
18. Washer
19. Wire to Master Switch
20. Battery Solenoid
21. Star Washer

Figure 17-1. Battery Installation - Model 150

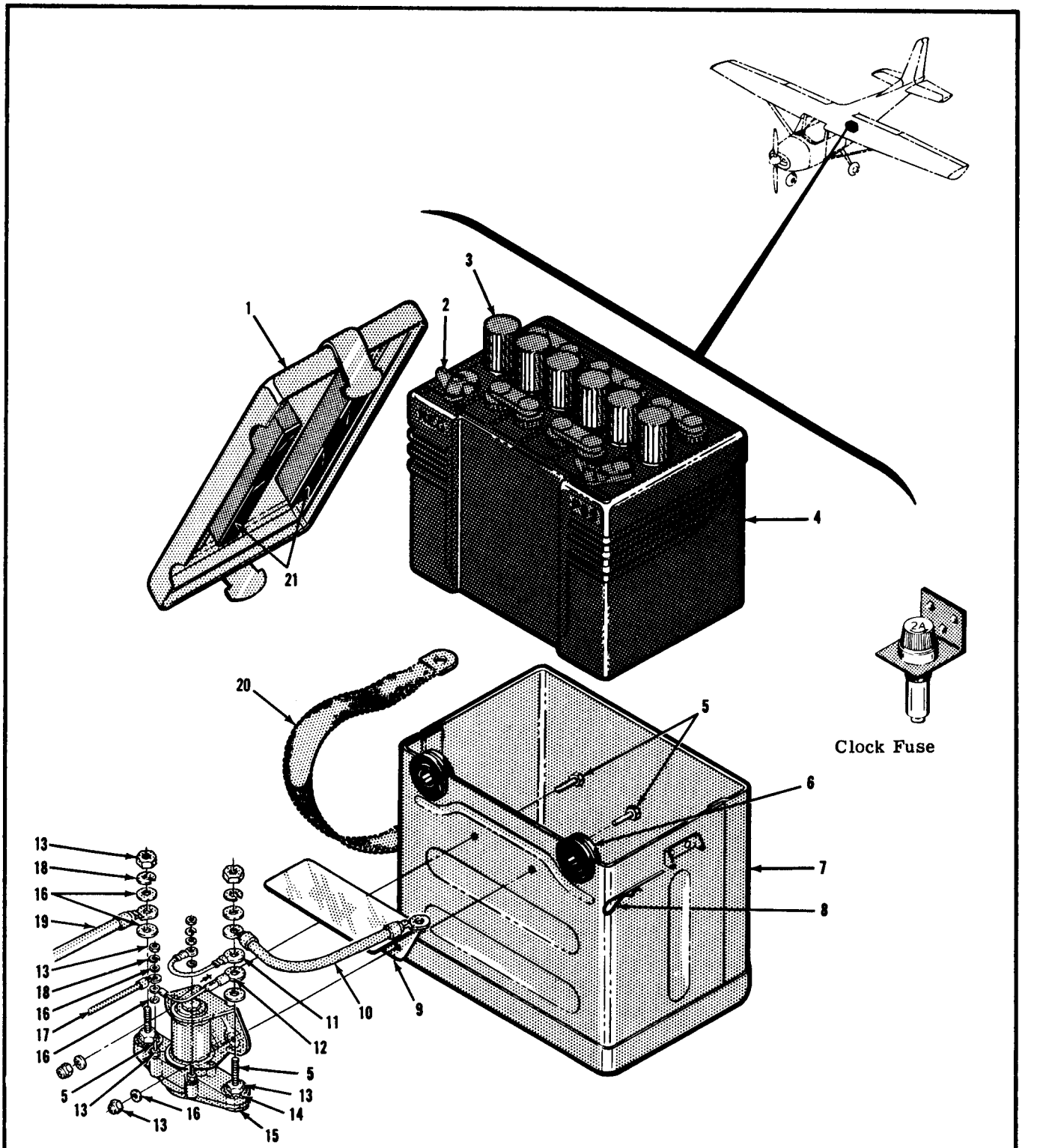

1. Battery Box Lid
2. Wing Nut
3. Filler Cap
4. Battery
5. Bolt
6. Grommet
7. Battery Box
8. Spring Clip
9. Water Shield
10. Power Cable
11. Jumper Wire
12. Diode Assembly
13. Nut
14. Star Washer
15. Battery Solenoid
16. Washer
17. Wire to Master Switch
18. Lockwasher
19. Starter Cable
20. Ground Strap
21. Insulators

Figure 17-2. Battery Installation - Model 172 and Skyhawk

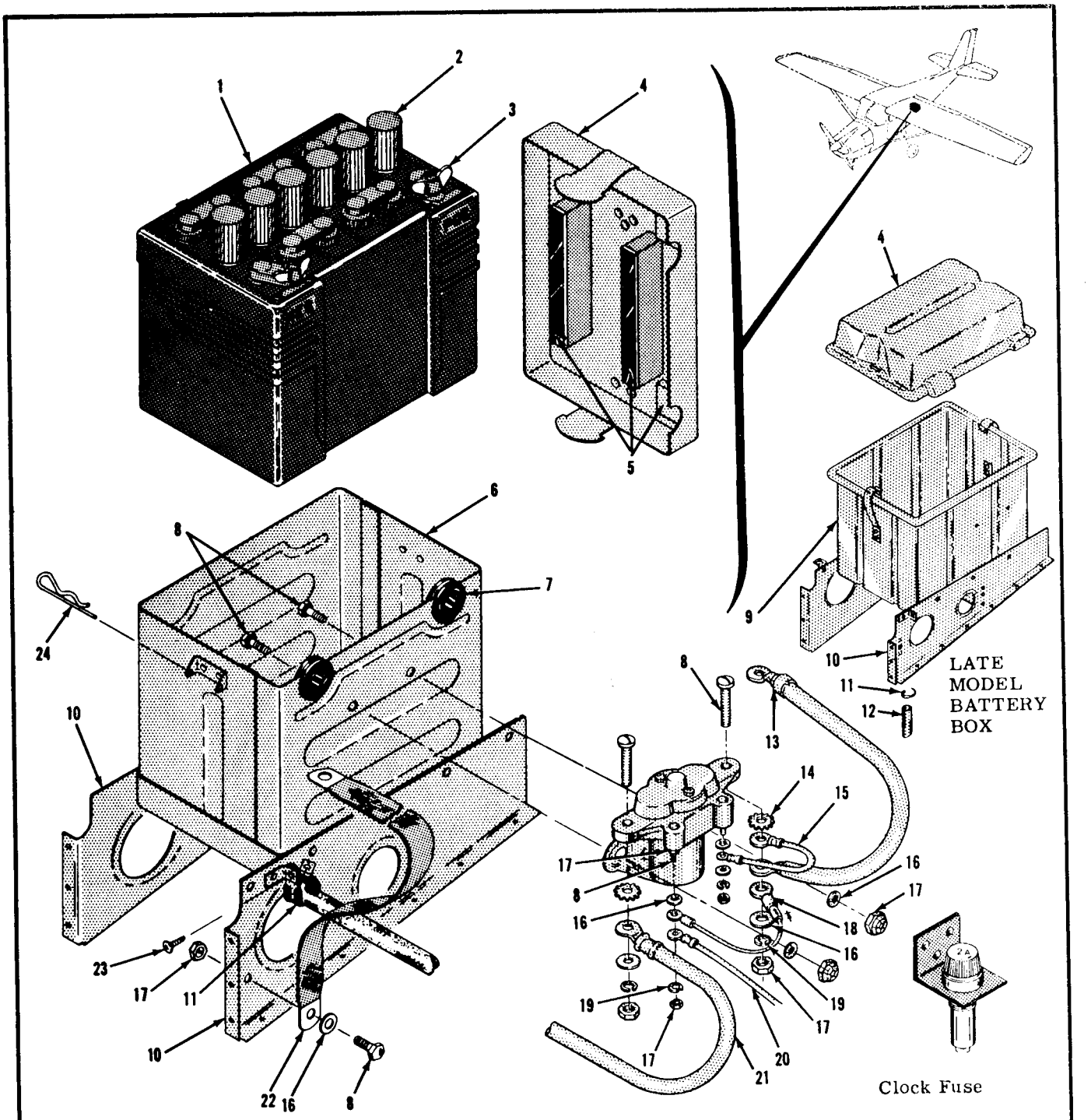

1. Battery
2. Filler Cap
3. Wing Nut
4. Battery Box Lid
5. Insulators
6. Aluminum Battery Box
7. Grommet
8. Bolt
9. Royalite Battery Box
10. Mounting Bracket
11. Clamp
12. Drain Hose
13. Power Cable
14. Star Washer
15. Jumper Wire
16. Washer
17. Nut
18. Diode Assembly
19. Lockwasher
20. Wire to Master Switch
21. Starter Cable
22. Ground Strap
23. Screw
24. Spring Clip

Figure 17-3. Battery Installation - Model 175 and Skylark

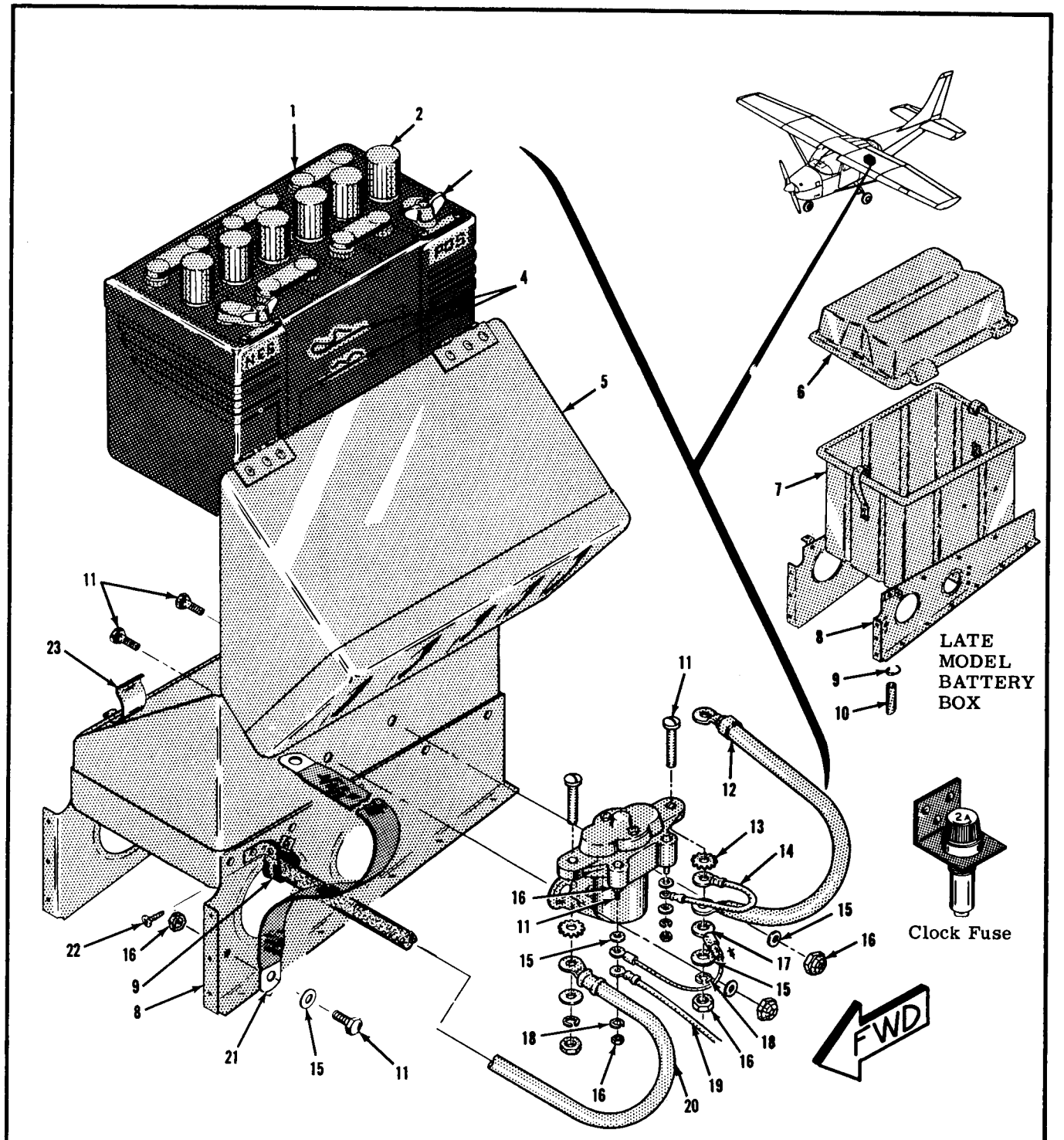

1. Battery
2. Filler Cap
3. Wing Nut
4. Spring Clips
5. Aluminum Battery Box
6. Battery Box Lid
7. Royalite Battery Box
8. Mounting Bracket
9. Clamp
10. Drain Hose
11. Bolt
12. Power Cable
13. Star Washer
14. Jumper Wire
15. Washer
16. Nut
17. Diode Assembly
18. Lockwasher
19. Wire to Master Switch
20. Starter Cable
21. Ground Strap
22. Screw
23. Battery Holder

Figure 17-4. Battery and Battery Box Installation - Models 180, 182, 185 and Skylane

17-10. TROUBLE SHOOTING THE BATTERY SYSTEM - Cont.

PROBABLE CAUSE	ISOLATION PROCEDURE	REMEDY
BATTERY SUPPLIES POWER TO BUS BUT WILL NOT CRANK ENGINE		
Low battery.	Check specific gravity.	Charge battery.
Faulty battery cables.	Inspect for corrosion and poor connection.	Clean and reconnect.
Battery cell shorting under load.	Test battery with a load tester.	Replace battery.
Defective starter contactor or solenoid.	On aircraft with starter switch check operation of switch and solenoid.	Repair wiring. Replace switch. Replace solenoid.
BATTERY USES EXCESSIVE AMOUNT OF WATER.		
Charging rate too high.	Test voltage regulator or try a new unit.	Adjust or replace regulator.
	NOTE Voltage regulators are adjustable, however adjustment should not be attempted unless proper equipment is available. Refer to Delco-Remy service bulletins for instructions.	

17-11. REMOVAL AND REPLACEMENT OF BATTERY. (See figures 17-1 thru 17-4.)

a. Remove the battery box cover and open cover.

b. Disconnect the ground cable from the negative battery terminal.

CAUTION

Always remove the ground cable first and replace it last to prevent accidental short circuits.

c. Disconnect the cable from the positive terminal of the battery.

d. Lift the battery out of the battery box.

e. To replace the battery, reverse this procedure.

17-12. CLEANING THE BATTERY. For maximum efficiency, the battery and connections should be kept clean at all times.

a. Remove the battery in accordance with the preceding paragraph.

b. Tighten battery cell filler caps to prevent the cleaning solution from entering the cells.

c. Wipe battery cable ends, battery terminal and the entire surface of the battery with a clean cloth moistened with a solution of bicarbonate of soda (baking soda) and water.

d. Rinse with clear water, wipe off excess water and allow batteries to dry.

e. Brighten up cable ends and battery terminals with emery cloth or a wire brush.

f. Coat the battery terminals and the cable ends with petroleum jelly.

g. Install the batteries according to the preceding paragraph.

17-13. ADDING ELECTROLYTE OR WATER TO THE BATTERY. A battery being charged and discharged with use will decompose the water from the electrolyte by electrolysis. When the water is decomposed hydrogen and oxygen gases are formed which escape into the atmosphere through the battery vent system. The acid in the solution chemically combines with the plates of the battery during discharge or is suspended in the electrolyte solution during charge. Unless the electrolyte has been spilled from a battery, acid should not be added to the solution. The water, however will decompose into gases and should be replaced regularly. Add distilled water as necessary to maintain the electrolyte level with the horizontal baffle plate or the split ring on the filler neck inside the battery. When "dry charged" batteries are put into service fill as directed with electrolyte. When the electrolyte level falls below normal with use, add only distilled water to maintain the proper level. The battery electrolyte contains approximately 25% sulphuric acid by volume. Any change in this volume will hamper the proper operation of the battery.

CAUTION

Do not add any type of "battery rejuvenator" to the electrolyte. When acid has been spilled from a battery, the acid balance may be adjusted by following instructions published by the Association of American Battery Manufacturers.

17-14. TESTING THE BATTERY. The specific gravity, of the battery may be measured with a hydrometer to determine the state of battery charge. If the hydrometer reading is low, slow-charge the battery and re-

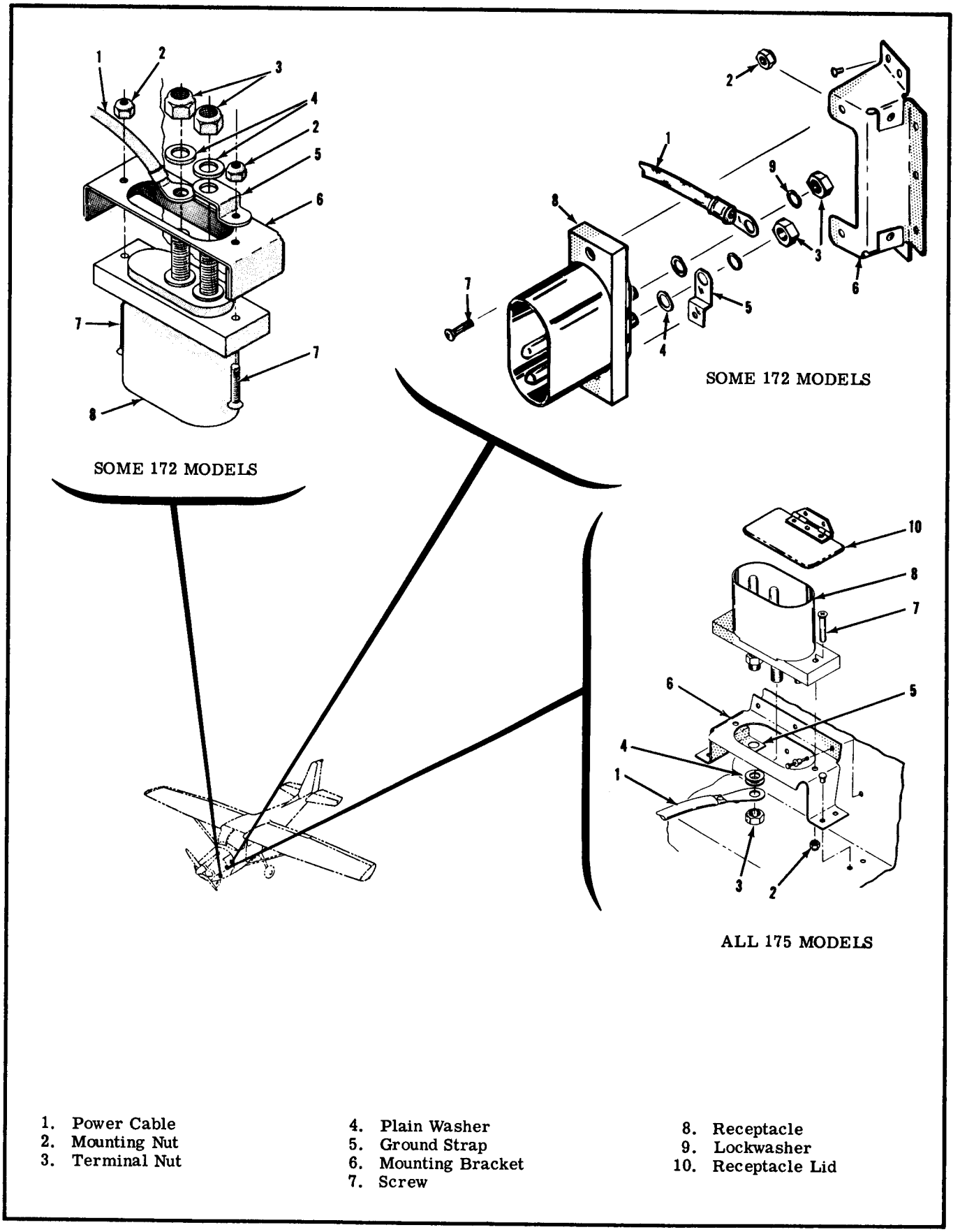

1. Power Cable
2. Mounting Nut
3. Terminal Nut
4. Plain Washer
5. Ground Strap
6. Mounting Bracket
7. Screw
8. Receptacle
9. Lockwasher
10. Receptacle Lid

Figure 17-5. Ground Service Receptacle Installation (Sheet 1 of 2)

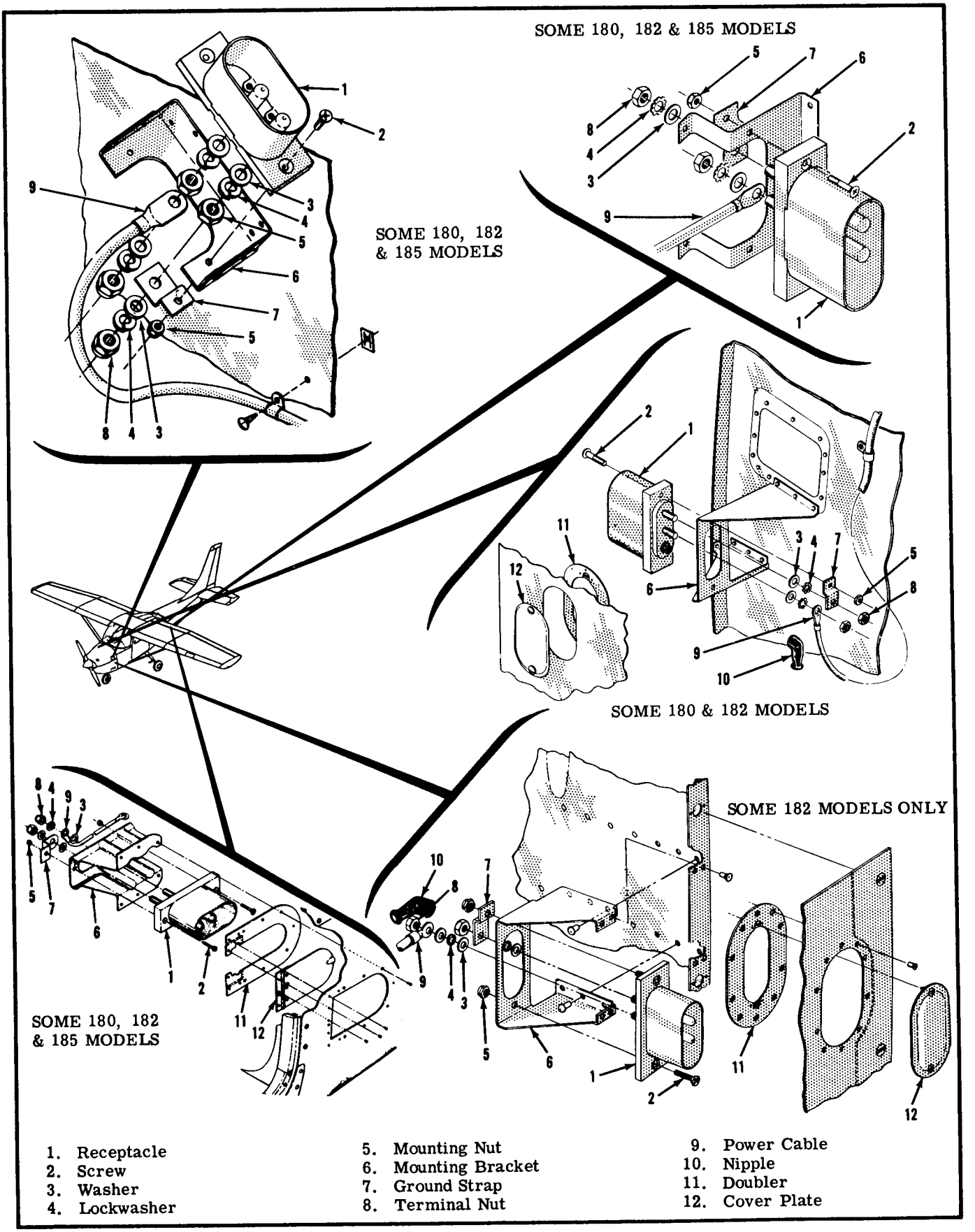

1. Receptacle
2. Screw
3. Washer
4. Lockwasher
5. Mounting Nut
6. Mounting Bracket
7. Ground Strap
8. Terminal Nut
9. Power Cable
10. Nipple
11. Doubler
12. Cover Plate

Figure 17-5. Ground Service Receptacle Installation (Sheet 2 of 2)

test. Hydrometer readings of the electrolyte must be compensated for the temperature of the electrolyte. Some hydrometers have a built-in thermometer and conversion chart. The following chart shows the battery condition for various hydrometer readings with an electrolyte temperature of 80° Fahrenheit.

BATTERY HYDROMETER READINGS

1.280 Specific Gravity	100% Charged
1.250 Specific Gravity	75% Charged
1.220 Specific Gravity	50% Charged
1.190 Specific Gravity	25% Charged
1.160 Specific Gravity	Practically Dead

NOTE

All readings shown are for an electrolyte temperature of 80° Fahrenheit. For higher temperatures the readings will be slightly lower. For cooler temperatures the readings will be slightly higher.

17-15. CHARGING THE BATTERY. When the battery is to be charged, the level of electrolyte should be checked and adjusted by adding distilled water to cover the tops of the internal battery plates. The battery cables and connections should be clean. If the battery has enough energy to operate the battery solenoid the charge may be applied to the battery by plugging a ground service generator into the ground service receptacle. Turn off all electrical switches except the master switch when charging.

CAUTION

When a battery is charging, hydrogen and oxygen gases are generated. Accumulation of these gases can create a hazardous explosive condition. Always keep sparks and open flame away from the battery. Allow unrestricted ventilation of the battery area during charging.

If the battery will not close the battery solenoid, plug in the ground service generator and close the battery solenoid using a wire jumper. The main points of consideration during a battery charge are excessive battery temperature and violent gassing. Test the battery with a hydrometer to determine the amount of charge. Decrease or stop the battery charging temporarily if the battery temperature exceeds 125°F.

17-16. REMOVAL AND REPLACEMENT OF BATTERY BOX. (See figures 17-1 thru 17-4.) The battery box is riveted either to the firewall or to the support brackets if the box is located in the tailcone. It is necessary to drill out the rivets to remove the box. When an aluminum box is installed and riveted into place, any rivets or scratches inside of the battery box should be coated with black acid-proof lacquer such as Enmar Type TT-L-54. When a Royalite box is installed, only the rivets inside of the battery box need be coated with lacquer since Royalite is uneffected by battery acid.

17-17. MAINTENANCE OF BATTERY BOX. The battery box should be inspected and cleaned periodically. The box and cover should be cleaned with a strong solution of bicarbonate of soda (baking soda) and water. Hard deposits may be removed from aluminum boxes with a wire brush. Deposits may be removed from a Royalite box with a plastic scraper. After all corrosive deposites have been removed from the box, flush it throughly with clean water.

CAUTION

Do not allow acid deposit to come in contact with skin or clothing. Serious acid burns may result unless the affected area is washed immediately with soap and water. Clothing will be ruined upon contact with battery acid.

Inspect the cleaned box and cover for physical damage and for areas lacking proper acid proofing. A badly damaged or corroded box should be replaced. If the box or lid require acid proofing paint the area with acid-proof black lacquer such as Enmar Type TT-L-54.

17-18. REMOVAL AND REPLACEMENT OF BATTERY SOLENOID. (See figures 17-1 thru 17-4.)

a. Open battery box and disconnect ground cable from negative battery terminal. Pull cable clear of battery box.

b. Remove the nut, lockwasher and the two plain washers securing the battery cables to the battery solenoid.

c. Remove the nut, lockwasher and the two plain washers securing the wire which is routed to the master switch.

d. Remove the bolt, washer and nut securing each side of the battery solenoid to the battery case. The solenoid will now be free for removal.

e. To replace a battery solenoid, reverse this procedure.

17-19. REMOVAL AND REPLACEMENT OF GROUND SERVICE RECEPTACLE. (See figure 17-5.)

a. Open battery box and disconnect the ground cable from the negative terminal of the battery and pull the cable from the battery box.

b. Remove the nuts and washers from the studs of the receptacle and remove the battery cable.

c. Remove the screws and nuts holding the receptacle and the ground strap will then be free from the bracket.

d. To install a ground service receptacle, reverse this procedure. Be sure to place the ground strap on the negative stud.

17-20. GENERATOR POWER SYSTEM.

17-21. The generator power system consists of the generator, voltage regulator and master switch. The generator output is controlled by the voltage regulator to compensate for the amount of electrical power being consumed and the condition of the battery. The master switch allows the pilot to shut the generator off completely. A 20-ampere generator

system is standard equipment on the 150, 172 and 175 models. A 35-ampere generator is optional on these models, and standard on early 180 and 182 models. If additional power is needed on the 172 or 175 a 50-ampere heavy duty system is available. On late 180, 182 and all 185 models a heavy duty 50-ampere system is standard.

17-22. GENERATOR. Generators used on Cessna aircraft are two brush-shunt wound types with negative ground. The generator output is controlled by the current passing thru the field winding of the generator. The field winding is connected to the armature circuit of the generator internally and must be grounded externally (by the regulator) for the generator to operate. The generator is driven either by a gear train in the engine accessory case or by a V-belt. The output is 14 volts at 20, 35 or 50 amperes, depending upon the particular unit. Three electrical connections are required for the generator. Ground is provided thru the generator case and mounting brackets. The field terminal is connected thru the master switch to the voltage regulator and the armature terminal connects directly to the voltage regulator. On some aircraft a capacitor is attached to the armature terminal of the generator. The capacitor suppresses any radio interference which might be created by the generator.

17-23. VOLTAGE REGULATOR. The voltage regulator is a vibrating contact type containing three relays. The voltage and current limiting relays control the output of the generator according to the demand of the battery. This control of the generator is accomplished by changing the amount of field current flowing through the generator. The maximum current output of the generator is controlled by the current limiting relay. If the current output of the generator exceeds a preset amount the current limiting relay interrupts the generator field circuit reducing the output by inserting a resistance into the field circuit. Similar conditions apply for generator output voltage control. When the generator is not producing, such as in an idle condition it is necessary to disconnect the battery from the generator. If the generator is not disconnected during no output conditions the armature appears as a path to ground for the battery voltage. To prevent this loss of battery potential the cutout relay portion of the regulator disconnects the battery from the armature circuit when the charging voltage drops below a specified level and current begins to flow in a reverse direction. The operation of the voltage regulator controls the output of the generator with respect to certain preset maximum levels, however the regulator must be informed of the batteries condition to taper the charge and prevent overcharging. This information is supplied to the regulator by the battery counter electromotive force on the regulator. The rate of charge is determined by the voltage limiting relay. The higher the battery's charge, the higher the charging voltage must be and the more effect the voltage limiter will have on the charging rate. This reduces the charging rate as the battery comes up to charge.

17-24. GENERATOR WARNING LIGHT. The generator warning light is provided to indicate when the generator is not charging the battery. The light is electrically connected across the cutout relay contacts of the voltage regulator. Whenever the cutout contacts are open the light will measure the potential difference between the battery and the generator armature. When the battery voltage is in excess of the generator output (such as an idling condition) the light will come on. As the generator speed (output) is increased, the potential difference across the light will diminish and the light will grow dim. When the cutout relay connects the generator output to the battery the light circuit is bypassed through the voltage regulator and the light will go out.

17-25. AMMETER. The ammeter is connected between the battery and the aircraft bus. The meter indicates the amount of current flowing either to or from the battery. With a low battery and the engine operating at cruise speed the ammeter will show the full generator output when all electrical equipment is turned off. When the battery is fully charged and cruise RPM is with all electrical equipment off, the ammeter will show a minimum charging rate.

17-26. TROUBLE SHOOTING THE GENERATOR POWER SYSTEM.

PROBABLE CAUSE	ISOLATION PROCEDURE	REMEDY
WARNING LIGHT OPERATES CORRECTLY — BATTERY DOES NOT COME UP TO FULL CHARGE.		
Blown fuse or circuit breaker.	Inspect.	Reset or replace.
Loose drive belt on generator. (Some aircraft)	Inspect.	Tighten to 1/2" deflection.
Poor wiring connections.	Inspect.	Clean and tighten connectors.
Faulty battery.	Test.	Replace.
Faulty regulator.	Test or substitute.	Adjust or replace.
Generator output low.	Test or substitute.	Repair.

TROUBLE SHOOTING THE GENERATOR POWER SYSTEM - Cont

PROBABLE CAUSE	ISOLATION PROCEDURE	REMEDY
WARNING LIGHT OPERATES CORRECTLY - BATTERY DOES NOT COME UP TO FULL CHARGE (Cont)		
Excessive power consumption.	Calculate electrical loading.	Install larger generator system.
WARNING LIGHT DOES NOT COME ON WHEN MASTER SWITCH IS TURNED ON.		
Battery down.	Battery solenoid not closing.	Charge battery.
Burned out lamp.	Try new lamp.	Replace.
Fuse blown. (Model 172 & 175) Some aircraft	Inspect.	Replace.
Faulty wiring or battery solenoid.	Test wiring and solenoid.	Repair or replace.
WARNING LIGHT DOES NOT GO OUT WHEN ENGINE SPEED IS INCREASED.		
Loose or broken generator belt (some aircraft).	Inspect.	Replace or tighten.
Loss of generator polarity.	Generator does not charge.	Polarize generator.
Faulty voltage regulator.	Test or substitute.	Adjust or replace. Polarize generator.
Faulty generator.	Test or substitute.	Repair or replace. Polarize generator.
Faulty circuit wiring.	Check.	Repair wiring.

17-27. REMOVAL AND REPLACEMENT OF GENERATOR — MODELS 180, 182 & 185 (See figure 17-6.)

a. The generator may be removed through the cowl door. However, the job will be performed easier if the top portion of the cowl is removed.

b. Release the clamp securing the generator blast tube and remove the tube.

c. Remove the wiring from the generator.

d. Cut the safety wire securing the generator adjustment bolt and remove the bolt and washer. Leave the generator belt in place to support the generator.

e. Remove the bolts, washers and nuts from the bottom of the generator bracket and remove generator and drive belt.

f. To install the generator, reverse this procedure. Adjust the drive belt for 1/2" deflection.

CAUTION

If the generator has a filter capacitor connected for suppression of radio noise, be sure that it is connected only to the armature terminal of the generator. If the capacitor is accidentally connected to the field terminal, it will cause arcing and burning of the voltage regulator contacts.

17-28. REMOVAL AND REPLACEMENT OF STANDARD 20-AMPERE GENERATOR ON MODELS 172, 175 AND 150.

a. Remove the cowl from the aircraft and drain the oil (it is not necessary to drain the oil in the 150).

b. Loosen the clip securing the blast tube and pull the tube clear of the generator.

c. Disconnect the generator wiring and pull it clear of the generator area.

d. Remove the three mounting nuts and washers attaching the generator to the engine accessory case.

e. Remove the bolts, spacers and washers securing the generator to the manifold balance tube. Pull the generator free from the engine and work the generator out of the left side of the engine.

f. To replace the generator, reverse this procedure. When tightening the generator, adjust the tension on the drive belt until 1/2" deflection can be obtained by

pressing the belt downward midway between the pulleys.

CAUTION

Before replacing the generator, carefully inspect the oil seal on the front of the generator. If there is any sign of wear or deterioration, replace the seal. A leaky seal will cause loss of engine oil.

If the generator has a filter capacitor connected for suppression of radio noise, be sure that it is connected only to the armature terminal of the generator. If the capacitor is accidentally connected to the field terminal, it will cause arcing and burning of the voltage regulator contacts.

17-29. REMOVAL AND REPLACEMENT OF OPTIONAL (HEAVY DUTY) GENERATOR ON MODEL 175.

a. Remove the cowl from the aircraft and drain the engine oil.

b. Block up the tail by placing a suitable support under the tail tie-down ring.

c. Using a hoist attached to the engine hoisting lug lift the engine only enough to relieve the tension on the engine shock mount bolts.

NOTE

If the propeller is not removed, the engine will be slightly nose heavy. A sling arranged between the engine crankshaft and hoist will be necessary to balance the engine.

d. Remove the engine shock mount bolts.

e. Disconnect any lines, electrical wiring, controls or clamps which would interfere with lifting the engine clear of its shock mounts and rotate the rear of the engine downward approximately two inches. Secure the engine in this position.

CAUTION

Use care not to damage any parts when moving the engine.

f. Disconnect the electrical wiring from the generator.

g. Release the generator blast tube clamp and pull the tube clear of generator.

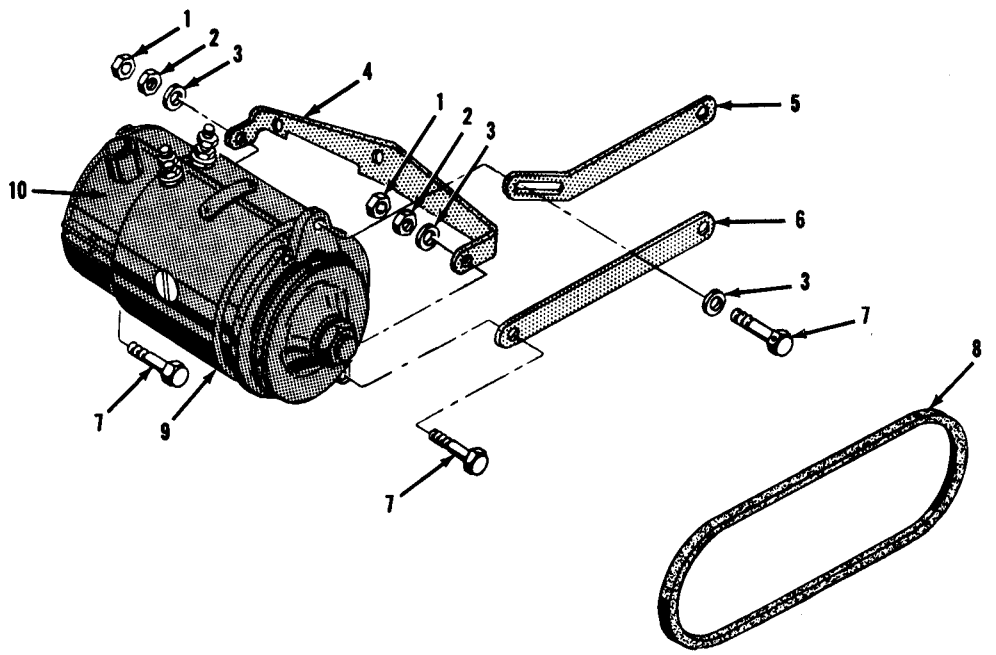

1. Palnut
2. Nut
3. Washer
4. Lower Forward Generator Bracket
5. Upper Generator Bracket
6. Lower Aft Generator Bracket
7. Bolt
8. Drive Belt
9. Generator
10. Brush Cover Band

Figure 17-6. Generator Installation - Models 180, 182 and 185

h. Remove the three nuts and washers attaching the generator to the engine accessory case.
i. Remove the bolts, spacers and washers attaching the generator to the intake manifold balance tube and remove the generator from engine.
j. To replace the generator, reverse this procedure.

CAUTION

Before replacing the generator, carefully inspect the oil seal on the front of the generator. If there is any sign of wear or deterioration, replace the seal. A leaky seal will cause loss of engine oil.

If the generator has a filter capacitor connected for the suppression of radio noise, be sure that it is connected only to the armature terminal of the generator. If the capacitor is connected to the field terminal, it will cause arcing and burning of the voltage regulator contacts.

17-30. POLARIZING THE GENERATOR. A generator of the type used on aircraft must maintain a residual magnetism in the pole shoes in order to produce a charge. Whenever any work is performed on the basic electrical system the generator should be polarized to make sure a charge will be produced. To polarize a generator connect a jumper momentarily between the ARMATURE and BATTERY terminals of the regulator before starting the engine. A momentary surge through the generator is enough to correctly polarize it.

CAUTION

If a generator is not correctly polarized the regulator and generator may be damaged.

17-31. REMOVAL AND REPLACEMENT OF VOLTAGE REGULATOR.
a. Disconnect the wiring from the voltage regulator terminals.

CAUTION

When removing the battery lead from the voltage regulator, tape the terminal on the end of the wire to prevent accidental short circuits.

b. Remove the three bolts securing the regulator to the firewall and remove the regulator.
c. To replace the regulator, reverse this procedure and polarize the generator field when completed.

NOTE

When replacing the generator or regulator, it is necessary to polarize the generator to establish proper polarity. Connect a jumper momentarily between the ARMATURE and BATTERY terminals of the regulator before starting the engine. A momentary surge through the generator is enough to correctly polarize it.

17-32. REMOVAL AND REPLACEMENT OF GENERATOR WARNING LIGHT.
a. Unsolder the wires attached to the light receptacle.
b. Remove the nut and lockwasher from the rear of the instrument panel and withdraw the receptacle.
c. To replace the receptacle, reverse this procedure.

17-33. AIRCRAFT LIGHTING SYSTEM.

17-34. Lighting equipment consists of landing and taxi lights, navigation lights, interior and instrument panel lights, courtesy lights and a rotating beacon.

17-35. LANDING AND TAXI LIGHTS. The landing and taxi lights are mounted in the leading edge of the left wing. A clear plastic cover provides weather protection for the lamps and is shaped to maintain the leading edge curvature of the wing. The landing lamp is mounted on the inboard side and adjusted to throw its beam further forward than the taxi light. Both lights are controlled by a single switch.

17-36. NAVIGATION LIGHTS. The navigation lights are located on each wing tip and on the trailing edge of the rudder or tailcone. Some aircraft are equipped with a flasher which blinks the lights at a regular rate. A plastic light detector on each wing tip allows the pilot to determine if the lamps are working properly during flight. The navigation lights and flasher are controlled by a single three position pull type switch on all models except the late 182 models which are controlled by a single three position split rocker type switch.

17-37. NAVIGATION LIGHTS FLASHER. The navigation lights flasher is mounted on the glove box. Early aircraft are equipped with a Narco thermal operating type flasher. The Narco flasher requires a noise filter when used in aircraft with radio equipment. The Narco flasher is no longer available and when replacement is required a transistor type should be installed. Some aircraft are equipped with a Van Duesen flasher which has a replaceable thermal type timing cartridge. The cartridge actuates a relay which controls the lights. If the timing cartridge fails, the lights remain on, providing fail safe operation. The latest flasher is a transistor type which does not use mechanical switching. The conducting properties of the transistors is used to turn the navigation lights on and off. Two transistor circuits are used to provide two circuit navigation light switching. Each of the circuits triggers the other into operation. This flasher also provides fail safe operation.

17-38. ROTATING BEACON. The rotating beacon is mounted in a fiberglas mounting attached to the vertical fin on all models. The 185 is equipped with two rotating beacons. One beacon is mounted on the vertical fin and the other is either mounted on the bottom of the fuselage or the bottom of the cargo pack when the pack is installed.

17-39. INTERIOR LIGHTS CONSOLE, MAP LIGHT AND DOME LIGHT. Two types of interior light consoles are currently being used. One console which incorporates a dome light is used on all models except late 182 models. The late 182 model console does not incorporate a dome light, but does incorporate a map light. Both consoles contain lighting for the instrument panel. The instrument light portion of the console has a red lens which provides non-glare instrument lighting. The intensity of the instrument lighting is controlled by a rheostat mounted on the instrument panel. The dome light has a frosted lens and is controlled by a slide switch located in the center of the console. The late model 182 console incorporates two map light opening holes with slide covers to provide map lighting. The map light can be exposed by merely moving the slide cover. The map light on all other models is an adjustable light mounted on the forward part of the left door post with the switch mounted below the light. The light beam is adjusted by rotating a small knob on the end of the light. Late 182 models have two dome lights. One is located on each side of the aft cabin section and are controlled by a single slide switch labeled, "Utility Lights." The utility lights switch also operates the courtesy lights.

17-40. COURTESY LIGHTS. Courtesy lights are offered as optional equipment on all late model aircraft. The lights consist of one light located on the underside of each wing to provide ground lighting for the cabin area. The courtesy lights have a clear lens and are controlled by a single slide switch labeled "Utility Lights" located on the left rear door post. The switch also operates the late model 182 dome lights.

17-41. COMPASS AND RADIO DIAL LIGHTS. The compass and radio dial lights are operated thru a rheostat which allows the pilot to adjust the lighting to a comfortable intensity. The rheostat also has an off position and a switch is not required for this circuit. The rheostat is located on the instrument panel.

17-42. TROUBLE SHOOTING AIRCRAFT LIGHTING SYSTEM.

PROBABLE CAUSE	ISOLATION PROCEDURE	REMEDY
LANDING OR TAXI LIGHT OUT.		
Lamp burned out.	Inspect.	Replace lamp.
Defective wiring.	Check continuity.	Repair wiring.
BOTH LANDING AND TAXI LIGHT OUT.		
Blown fuse.	Inspect.	Replace.
Defective wiring.	Check continuity.	Repair wiring.
Defective switch.	Check continuity through switch.	Replace switch.
ONE NAVIGATION LIGHT OUT.		
Lamp burned out.	Inspect.	Replace lamp.
Defective wiring.	Check continuity.	Repair wiring.
Defective light assembly.	Inspect.	Replace light assembly.
NAVIGATION LIGHTS WILL NOT TURN ON.		
Blown fuse.	Inspect.	Replace fuse.
Defective wiring.	Check continuity between switch and aircraft bus.	Repair wiring.
Defective switch.	Check continuity through switch.	Replace switch.
NAVIGATION LIGHTS ON – WILL NOT BLINK.		
Defective flasher cartridge.	Test with new cartridge.	Replace cartridge.

TROUBLE SHOOTING AIRCRAFT LIGHT SYSTEM (Cont).

PROBABLE CAUSE	ISOLATION PROCEDURE	REMEDY
NAVIGATION LIGHTS ON – WILL NOT BLINK (Cont)		
Defective flasher unit.	Test by replacing unit.	Repair or replace flasher.
ROTATING BEACON WILL NOT OPERATE.		
Circuit breaker open.	Inspect.	Reset breaker.
Defective wiring.	Check continuity of wiring from aircraft bus to rotating beacon plug.	Repair wiring.
Defective beacon.		Repair or replace beacon.
MAP LIGHT, DOME LIGHT OR COURTESY LIGHT TROUBLE.		
Blown fuse.	Inspect.	Replace.
Burned out lamp.	Inspect.	Replace.
Defective switch.	Check continuity.	Replace.
Defective wiring.	Check continuity from light to aircraft bus.	Repair wiring.
INSTRUMENT LIGHTS WILL NOT LIGHT.		
Rheostat turned down.		Adjust.
Blown fuse.	Inspect.	Replace.
Burned out lamp.	Inspect.	Replace.
Defective rheostat.	Check continuity.	Replace.
Defective wiring.	Check continuity of wiring from light to bus.	Repair wiring.

17-43. REMOVAL AND REPLACEMENT OF TAXI OR LANDING LIGHT. (See figure 17-7.)

a. Remove the 18 screws securing the landing light window and remove the window and retainer.

b. Three types of landing light brackets have been used. Early aircraft use two channels to hold each lamp. The channels are attached to the wing with the adjusting screws and require removal of the screws to change the lamp. Later aircraft used a formed bracket which is riveted together. The bracket is a snap fit around the lamp. To change the lamp it is necessary to remove the adjusting screws. When replacing the bracket assembly or the channels, refer to the landing light adjustment chart. Late aircraft use a two piece bracket which allows the lamp to be changed without disturbing the adjustments.

NOTE

To remove the lamp from the formed bracket which is riveted together, place both thumbs against the upper right hand corner of the bracket while applying pressure against the back of the lamp with the fingers. The bracket may be twisted in this manner and slipped off the lamp. When replacing the lamp in the bracket, start by aligning the boss of the lamp with the keyway in the bracket around the lamp with the fingers.

c. To replace a lamp reverse this procedure.

17-44. REMOVAL AND REPLACEMENT OF NAVIGATION LIGHTS. Figure 17-9 shows in detail all components of the navigation lights, detector and flasher. Use this figure as a guide for removal and replacement.

17-45. REMOVAL AND REPLACEMENT OF ROTATING BEACON. (See figure 17-10.)

a. Remove the three screws holding the beacon to the fiberglas mounting.
b. Withdraw the beacon from the mounting and remove the screw attaching the ground wire to the fin structure.
c. Disconnect the other electrical lead and remove beacon.
d. To replace the beacon, reverse this procedure. Mount the beacon with the light baffle forward.

17-46. REMOVAL AND REPLACEMENT OF DOME AND INSTRUMENT LIGHTS. Figure 17-11 shows in detail all components of the dome and instrument lights installation. Use this figure as a guide for removal and replacement.

17-47. ADJUSTMENT OF OVERHEAD LIGHT CONSOLE FOR LATE MODEL 182'S. The overhead light console on late 182 models may be adjusted to allow the light to illuminate the instrument panel without striking the windshield and causing glare. Adjust the angle of light by turning the rear outboard screws (see figure 17-11), until the light beams are properly directed.

17-48. REMOVAL AND REPLACEMENT OF COURTESY LIGHTS. Figure 17-12 shows in detail all components of the courtesy lights installation. Use this figure as a guide for removal and replacement.

SHOP NOTES:

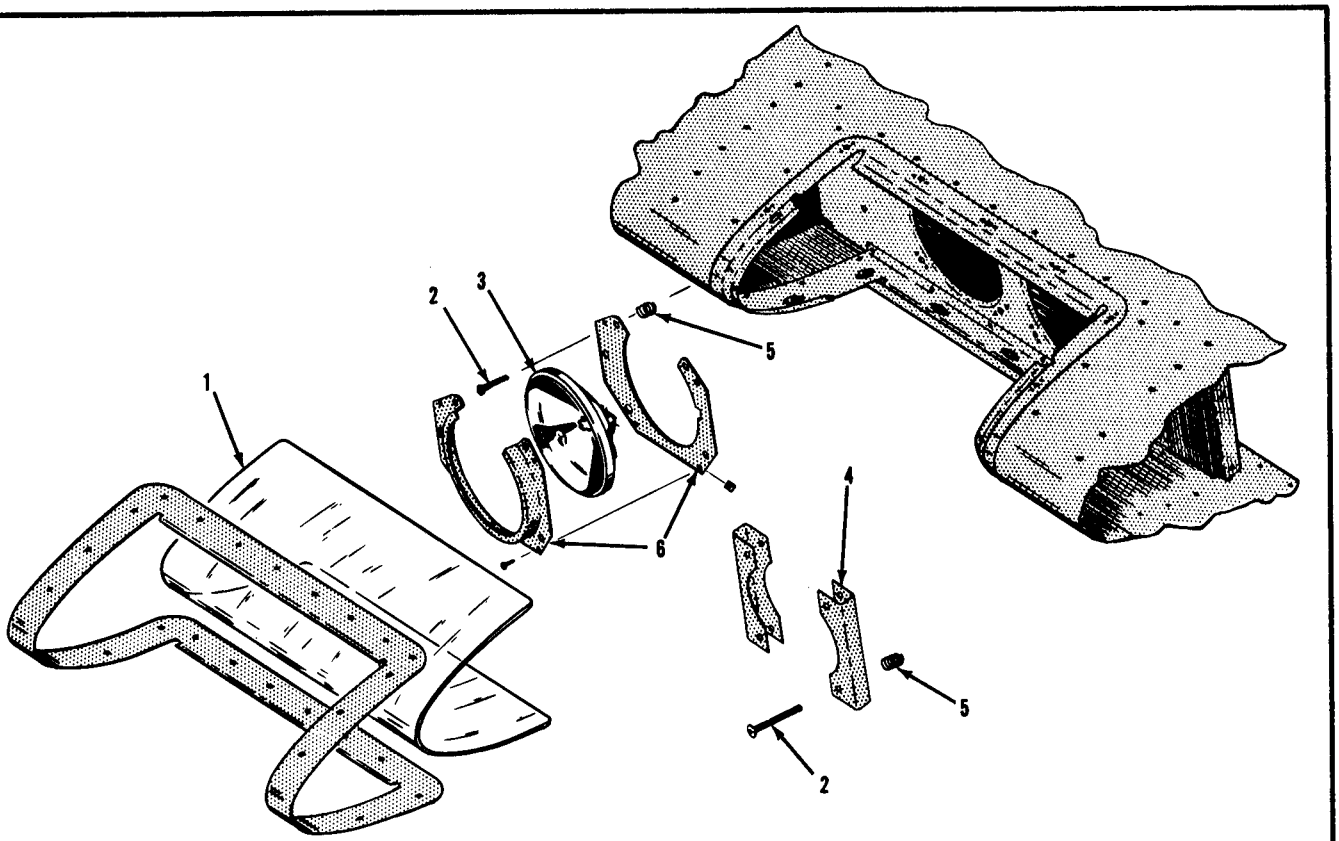

1. Window
2. Screw
3. Landing Light
4. Support Channel
5. Spring
6. Bracket

Figure 17-7. Landing and Taxi Lights Installation

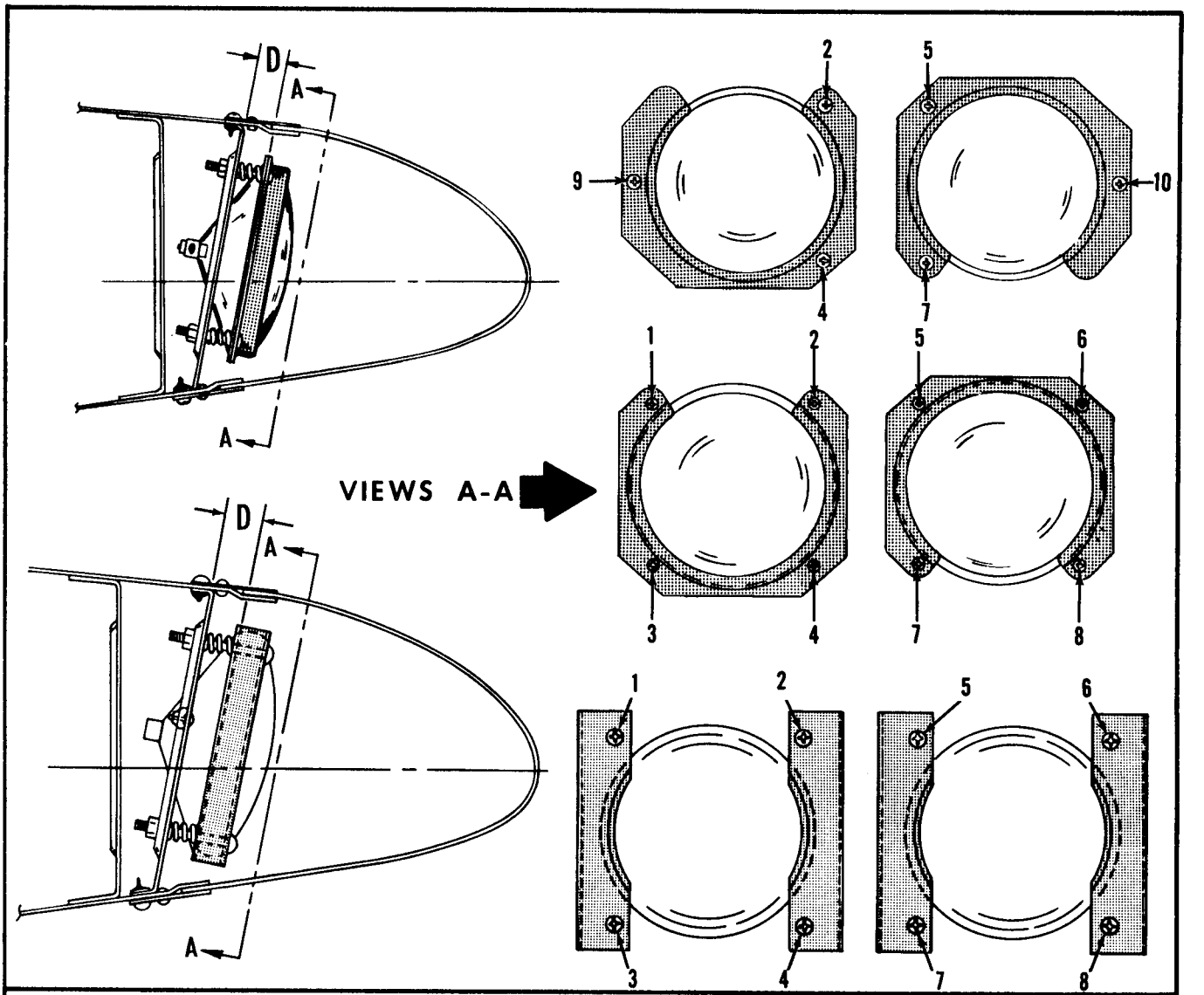

LOCATION	DIMENSION D														
	150		172			175				180 & 185			182		
	Prior to 15059020	15059020 & on	Prior to 46176	46176 thru 47748	47749 & on	Prior to 55787	56787 thru 46238	56239 thru 56779	56780 & on	Prior to 50366	50366 thru 50872	50873 & on also 185	Prior to 51638	51638 thru 52940	52941 & on
1	0.55	----	0.40	0.50	----	0.40	0.50	0.50	----	0.56	0.55	----	0.50	0.50	----
2	0.50	0.50	0.50	0.70	0.70	0.50	0.70	0.65	0.70	0.62	0.55	0.65	0.50	0.60	0.60
3	0.80	----	0.75	0.70	----	0.75	0.70	0.65	----	0.62	0.60	----	0.75	0.85	----
4	0.75	0.75	0.85	0.90	0.90	0.85	0.90	0.80	0.90	0.69	0.60	0.70	0.75	0.90	0.95
5	0.50	0.50	0.38	0.50	0.50	0.38	0.50	0.50	0.50	0.56	0.60	0.70	0.38	0.50	0.60
6	0.95	----	0.80	0.90	----	0.80	0.90	0.95	----	0.90	1.10	----	0.78	0.90	----
7	0.95	0.95	0.68	0.85	0.85	0.68	0.85	0.95	0.85	0.50	0.50	0.60	0.69	0.85	0.95
8	1.40	----	1.10	1.25	----	1.10	1.25	1.40	----	0.84	1.00	----	0.84	1.25	----
9	----	0.68	----	----	0.60	----	----	----	0.60	----	----	0.65	----	----	0.68
10	----	1.18	----	----	1.08	----	----	----	1.08	----	----	1.15	----	----	1.16

Figure 17-8. Landing and Taxi Light Adjustment Chart

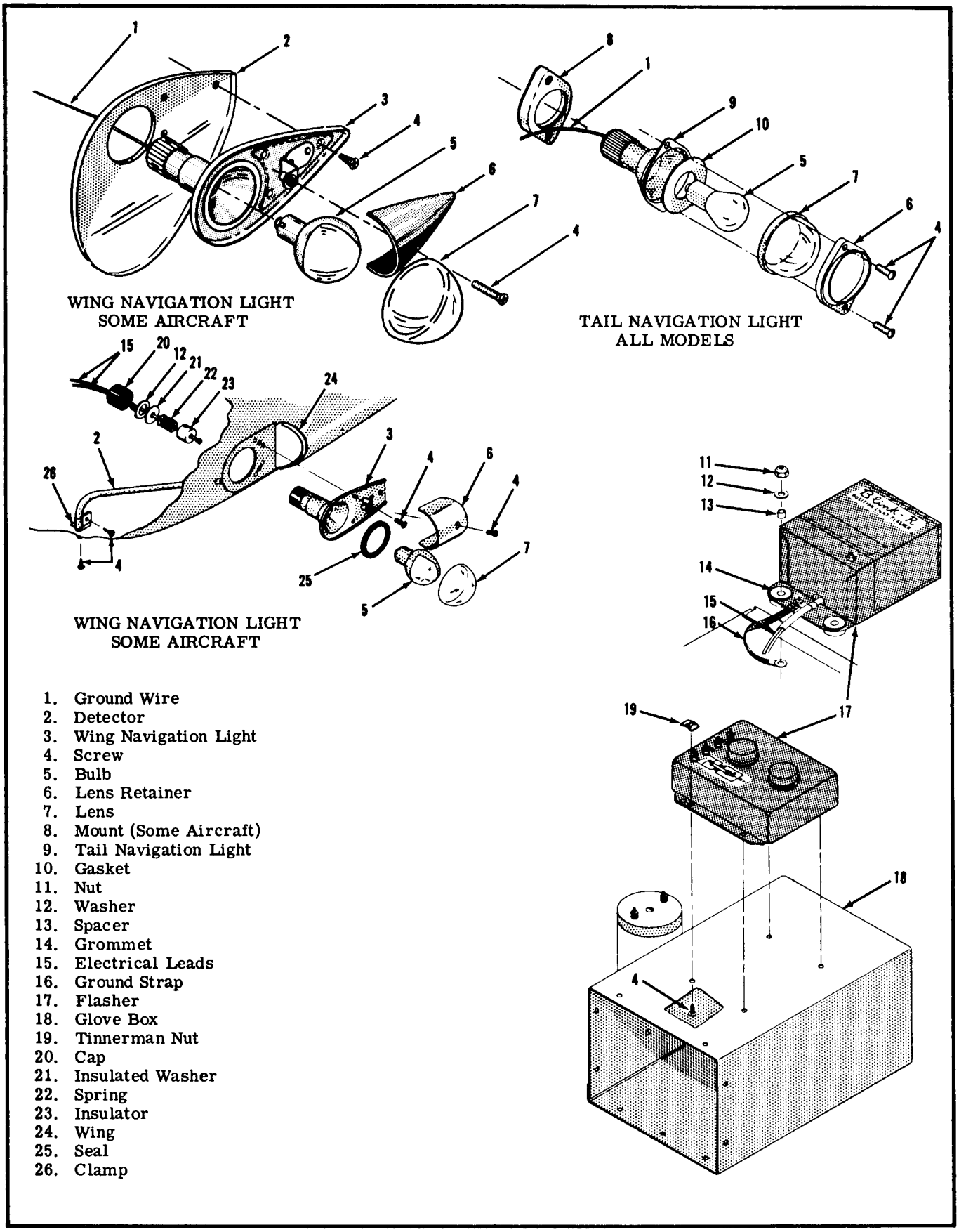

1. Ground Wire
2. Detector
3. Wing Navigation Light
4. Screw
5. Bulb
6. Lens Retainer
7. Lens
8. Mount (Some Aircraft)
9. Tail Navigation Light
10. Gasket
11. Nut
12. Washer
13. Spacer
14. Grommet
15. Electrical Leads
16. Ground Strap
17. Flasher
18. Glove Box
19. Tinnerman Nut
20. Cap
21. Insulated Washer
22. Spring
23. Insulator
24. Wing
25. Seal
26. Clamp

Figure 17-9. Navigation Lights Installation

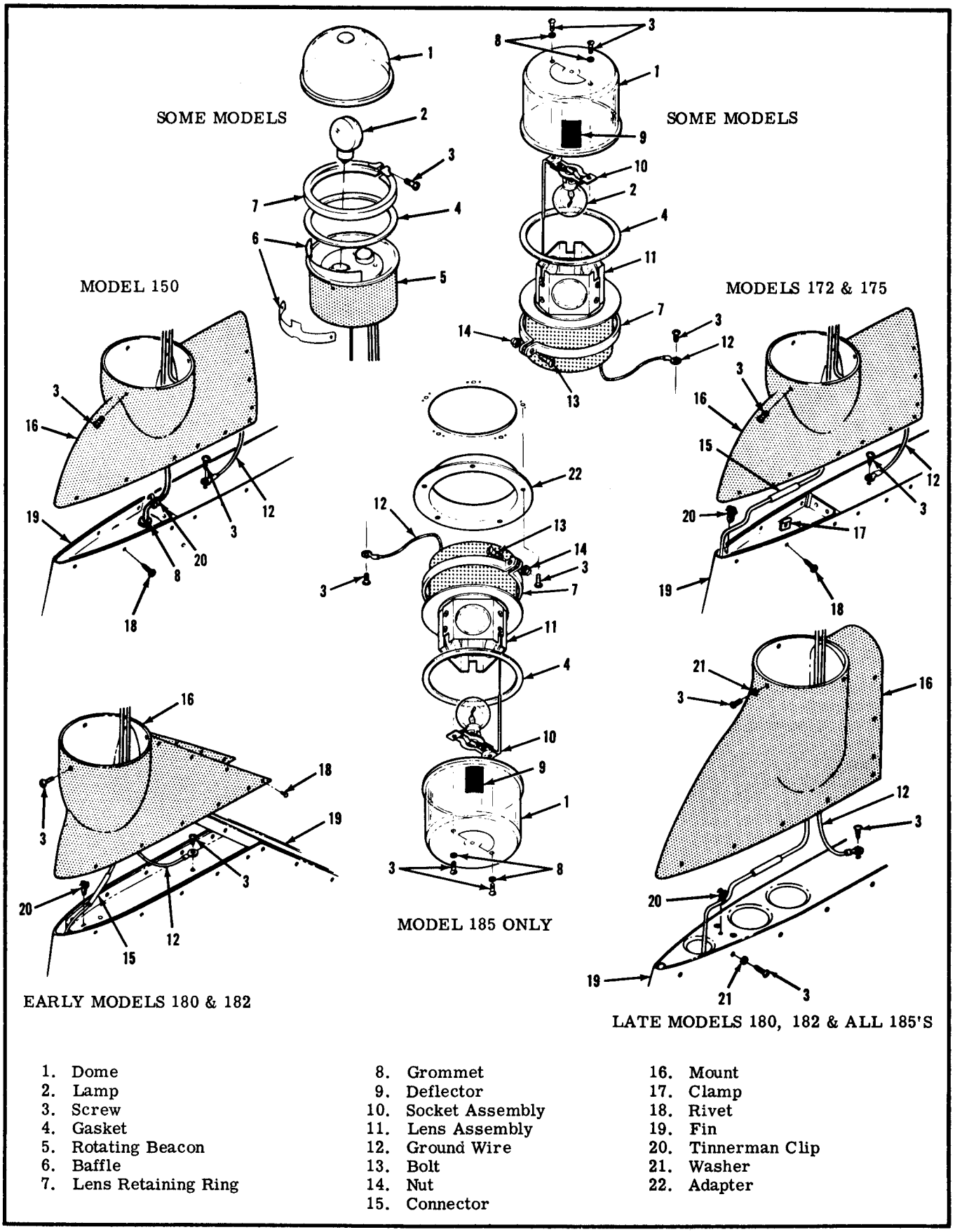

1. Dome
2. Lamp
3. Screw
4. Gasket
5. Rotating Beacon
6. Baffle
7. Lens Retaining Ring
8. Grommet
9. Deflector
10. Socket Assembly
11. Lens Assembly
12. Ground Wire
13. Bolt
14. Nut
15. Connector
16. Mount
17. Clamp
18. Rivet
19. Fin
20. Tinnerman Clip
21. Washer
22. Adapter

Figure 17-10. Rotating Beacon Installation

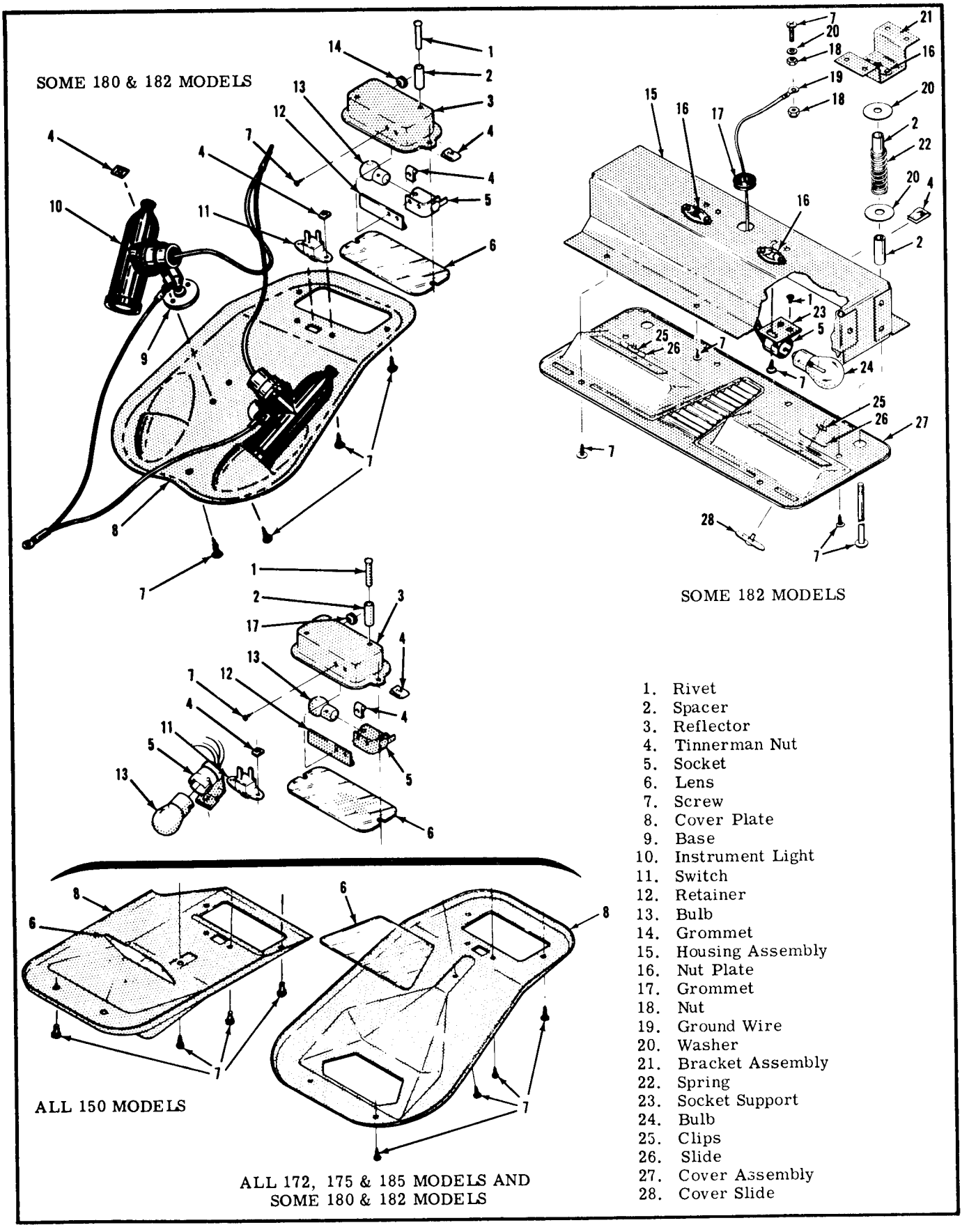

1. Rivet
2. Spacer
3. Reflector
4. Tinnerman Nut
5. Socket
6. Lens
7. Screw
8. Cover Plate
9. Base
10. Instrument Light
11. Switch
12. Retainer
13. Bulb
14. Grommet
15. Housing Assembly
16. Nut Plate
17. Grommet
18. Nut
19. Ground Wire
20. Washer
21. Bracket Assembly
22. Spring
23. Socket Support
24. Bulb
25. Clips
26. Slide
27. Cover Assembly
28. Cover Slide

Figure 17-11. Interior Lights Console Installation

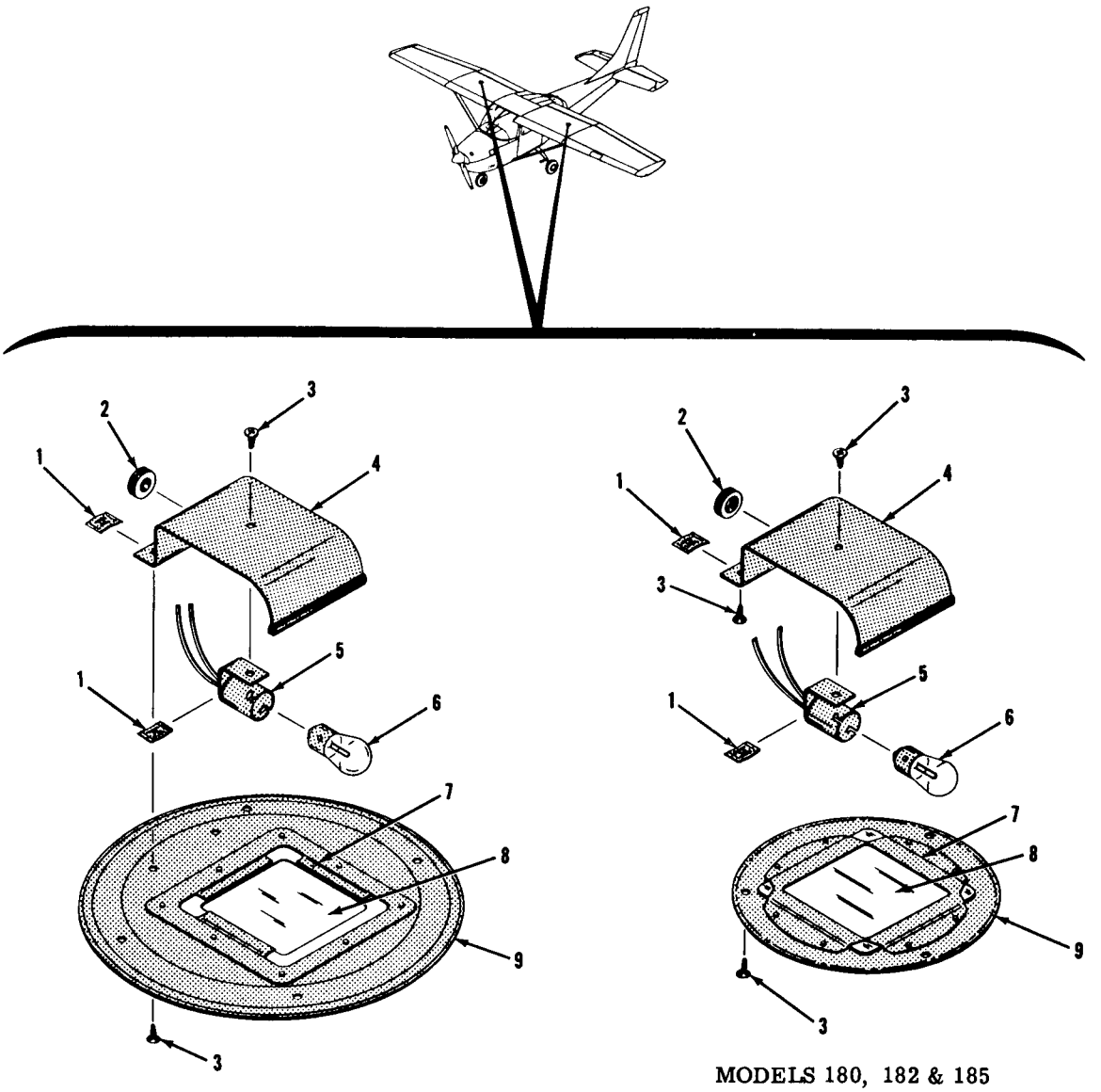

1. Tinnerman Nut
2. Grommet
3. Screw
4. Reflector
5. Socket Assembly
6. Bulb
7. Doubler
8. Lens
9. Inspection Plate

Figure 17-12. Courtesy Lights Installation

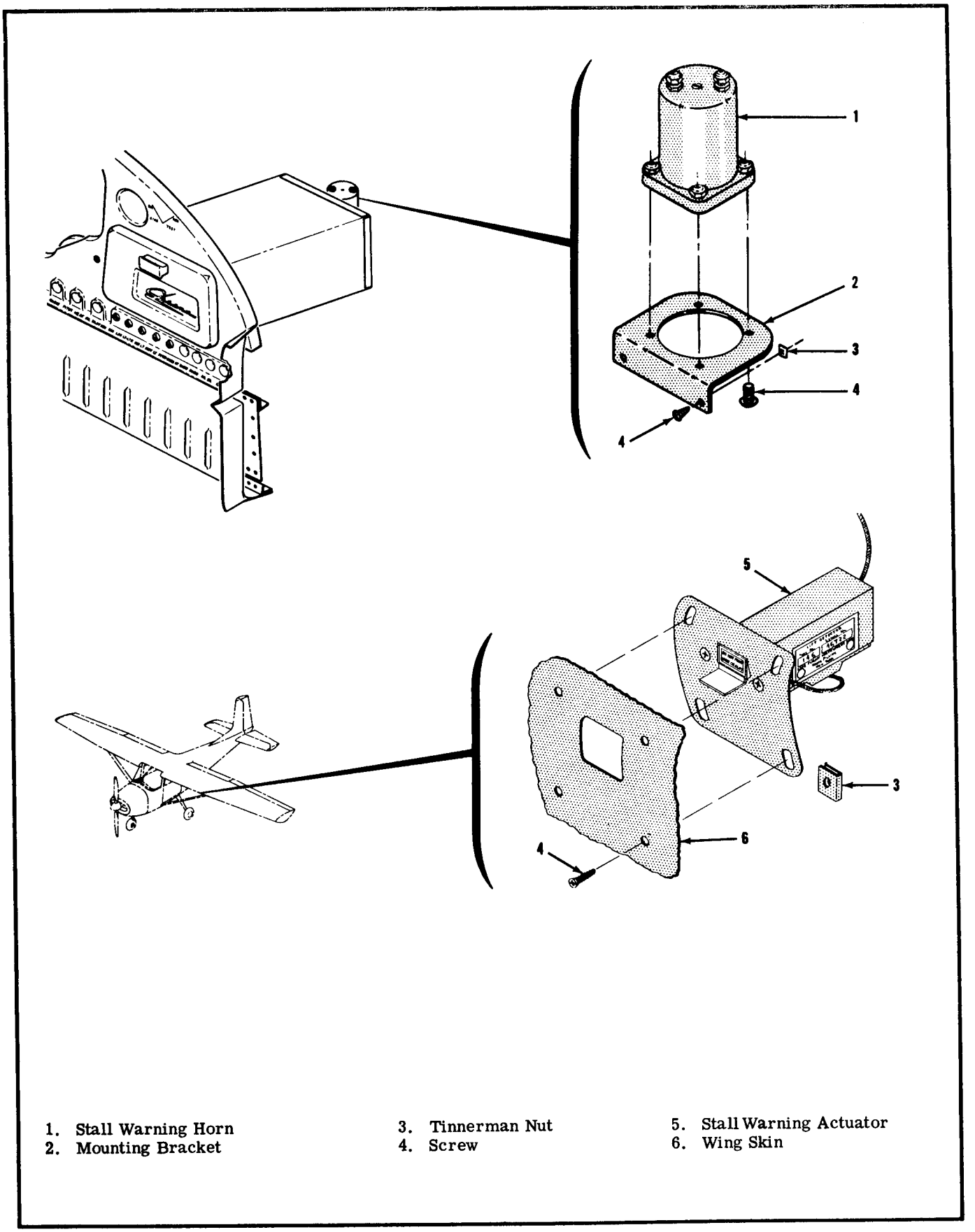

1. Stall Warning Horn
2. Mounting Bracket
3. Tinnerman Nut
4. Screw
5. Stall Warning Actuator
6. Wing Skin

Figure 17-13. Stall Warning Horn and Actuator Installation

17-49. STALL WARNING CIRCUIT.

17-50. The stall warning circuit is comprised of a warning horn and an actuating switch. The switch is installed in the leading edge of the left wing and is actuated by airflow over the surface of the wing. The switch will close as a stall condition is approached, actuating the warning horn which is mounted on the glove box. The stall warning unit should actuate the stall warning horn approximately five to ten miles per hour above airplane stall speed. Install the lip of the warning unit approximately one-sixteenth of an inch below the center line of the wing skin cut-out. Test fly the aircraft to determine if the unit actuates the warning horn at the desired speed. If the unit actuates the horn at a speed in excess of ten miles per hour, loosen the mounting screws and move the unit down. If the unit actuates the horn at a speed less than five miles an hour, loosen the mounting screws and move the unit up.

17-51. PITOT AND STALL WARNING HEATER CIRCUITS.

17-52. Electrical heater units are incorporated in some pitot tubes and stall warning switch units. The heaters offset the possibility of ice formations on the pitot tube and stall warning actuator switch. The heaters are integrally mounted in the pitot tube and stall warning actuator switch. Both heaters are controlled by the pitot heat switch.

17-53. REMOVAL AND REPLACEMENT OF STALL WARNING HORN AND SWITCH. (See figure 17-13.) Figure 17-13 shows in detail all components of the stall warning system. Use this figure as a guide for removal and replacement.

17-54. REMOVAL AND REPLACEMENT OF PITOT HEATER. (See figure 17-14.) Figure 17-14 shows in detail all components of the pitot heater installation. Use this figure as a guide for removal and replacement.

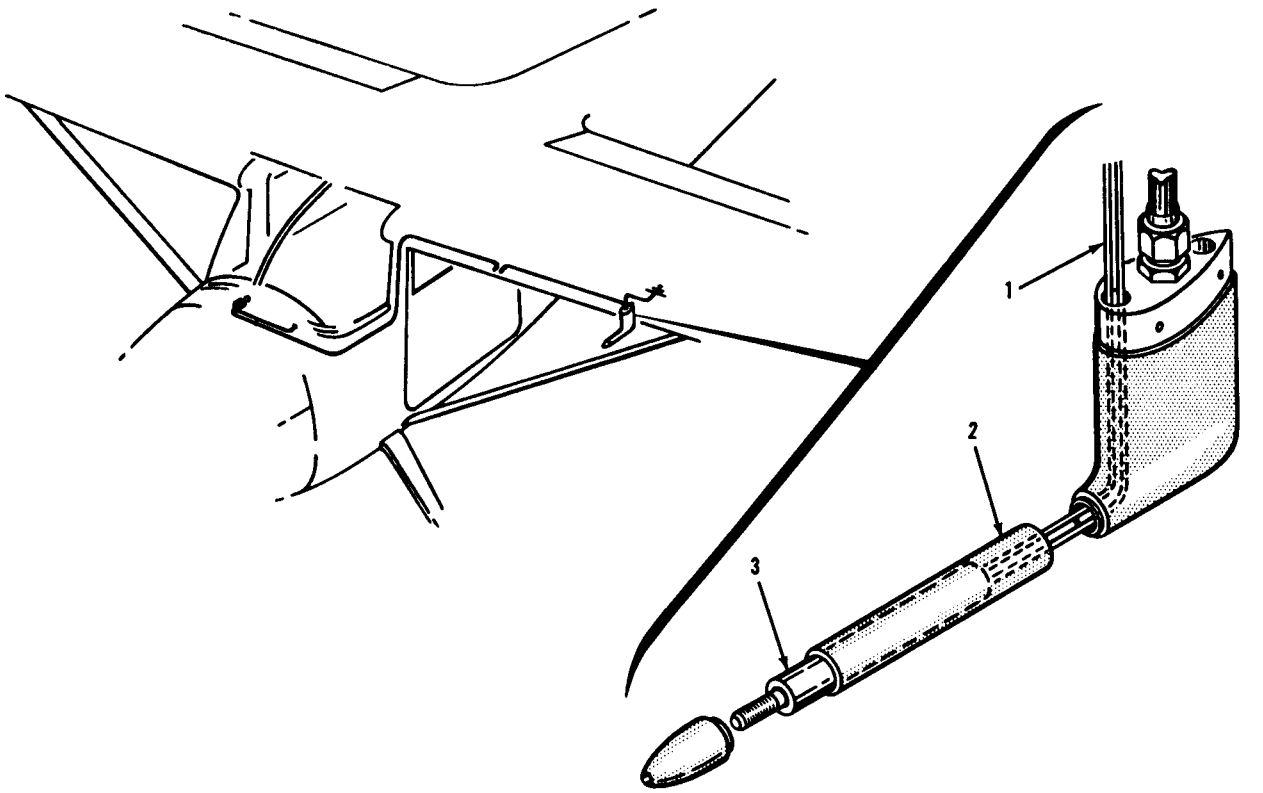

1. Electrical Leads
2. Pitot Tube
3. Pitot Heater

Figure 17-14. Heater Pitot Installation

INDEX OF ELECTRICAL WIRING DIAGRAMS

MODEL 150

	Page
Battery Circuit	17-32
Cigar Lighter Circuit	17-34
Clock Circuit	17-32
Compass Light	17-34
Courtesy Lights	17-35
Dome Light Circuit	17-34
Fuel Quantity Indicators Circuit	17-33
Generator Circuit	17-32
Heated Pitot & Stall Warning Transmitter Circuit	17-33
Instruments Light Circuit	17-34
Landing Lights Circuit	17-34
Magnetos Circuit	17-33
Navigation Lights Circuit	17-34
Radio Dial Lights Circuit	17-34
Rotating Beacon Circuit	17-33
Stall Warning Circuit	17-33
Starter Circuit	17-32
Taxi Light Circuit	17-34
Turn-and-Bank Indicator Circuit	17-33

MODEL 172

	Page
Auxiliary Fuel Tank Circuit	17-41
Battery Circuit	17-37, 17-38, 17-39
Carburetor Air Temperature Circuits	17-45
Cigar Lighter Circuit	17-44
Clock Circuit	17-39
Compass Light Circuit	17-43
Courtesy Lights Circuit	17-52
Cylinder Head Temperature Gage Circuit	17-42
Dome Light Circuit	17-52
Flares Circuit	17-46
Fuel Quantity Indicators Circuit	17-51
Generator Circuit	17-37, 17-38, 17-39
Ground Service Receptacle Circuit	17-37, 17-38, 17-39
Gyro Horizon Indicator Circuits	17-47
Heated Pitot & Stall Warning Transmitter Circuit	17-46
Instrument Lights Circuit	17-43
Landing Lights Circuit	17-44
Magnetos Circuit	17-40, 17-42
Map Light Circuit	17-53
Navigation Lights Circuit	17-48, 17-49, 17-50
Oil Dilution Circuit	17-41
Radio Dial Lights Circuit	17-43
Rotating Beacon Circuit	17-42
Stall Warning Circuit	17-46
Starter Circuit	17-37, 17-38, 17-39, 17-40
Taxi Light Circuit	17-44
Turn-and-Bank Indicator Circuit	17-46, 17-47

MODEL 175

	Page
Auxiliary Fuel Tank Circuit	17-67
Battery Circuit	17-55, 17-56
Carburetor Air Temperature Gage Circuits	17-58
Cigar Lighter Circuit	17-61
Clock Circuit	17-56
Compass Light Circuit	17-67
Courtesy Lights Circuit	17-65
Cylinder Head Temperature Gage Circuit	17-59
Dome Light Circuit	17-65
Fuel Quantity Indicator Circuit	17-68
Generator Circuit	17-35, 17-56
Ground Service Receptacle Circuit	17-55, 17-56
Gyro Horizon Indicator Circuit	17-70
Heated Pitot & Stall Warning Transmitter Circuit	17-59
Instrument Light Circuit	17-67
Landing Light Circuit	17-61
Magnetos Circuit	17-57, 17-59
Map Light Circuit	17-65
Navigation Lights Circuit	17-62, 17-63, 17-64
Oil Dilution Circuit	17-60
Oil Pressure Indicator Circuit	17-68
Radio Dial Lights Circuit	17-55
Rotating Beacon Circuit	17-66
Stall Warning Circuit	17-69
Starter Circuit	17-55, 17-56, 17-57
Taxi Light Circuit	17-61
Turn-and-Bank Indicator Circuit	17-69

MODEL 180

	Page
Auxiliary Fuel Tank Circuit	17-89
Battery Circuit	17-72, 17-73, 17-74, 17-75, 17-76, 17-77
Carburetor Air Temperature Gage Circuit	17-95, 17-96
Cigar Lighter Circuit	17-81
Clock Circuit	17-76, 17-77
Compass Light Circuit	17-87, 17-88
Courtesy Light Circuit	17-99
Cylinder Head Temperature Gage Circuit	17-95
Dome Light Circuit	17-84, 17-85
Flares Circuit	17-79
Fuel Quantity Indicators Circuit	17-97
Generator Circuit	17-72, 17-73, 17-74, 17-75, 17-76, 17-77
Ground Service Receptacle Circuit	17-72, 17-73, 17-74, 17-75, 17-76, 17-77
Gyro Horizon Indicator Circuit	17-99

INDEX OF ELECTRICAL WIRING DIAGRAMS (Cont)

MODEL 180 (Cont)

	Page
Heated Pitot & Stall Warning Transmitter Circuit	17-83
Instrument Lights Circuit	17-87, 17-88
Landing Light Circuit	17-86
Magnetos Circuit	17-76, 17-77, 17-78
Map Light Circuit	17-82
Navigation Lights Circuits	17-90, 17-91, 17-92
Oil Dilution Circuit	17-80
Oil Pressure Indicator Circuit	17-97
Radio Dial Lights Circuit	17-70, 17-71, 17-72
Rotating Beacon Circuit	17-89
Stall Warning Circuit	17-93, 17-94
Starter Circuit	17-72 thru 17-77
Taxi Light Circuit	17-86
Turn-and-Bank Indicator Circuit	17-98

MODEL 182

	Page
Auxiliary Fuel Tank Circuit	17-107
Battery Circuit	17-101 thru 17-106
Carburetor Air Temperature Gage Circuit	17-124, 17-125, 17-126
Cigar Lighter Circuit	17-110
Clock Circuit	17-105, 17-106
Compass Light Circuit	17-116, 17-117, 17-118
Courtesy Lights Circuit	17-136
Cylinder Head Temperature Gage Circuit	17-113
Dome Light Circuit	17-119, 17-120
Electrical Flaps Circuit	17-131
Flares Circuit	17-112
Fuel Quantity Indicators Circuit	17-114, 17-115
Generator Circuit	17-101 thru 17-106
Ground Service Receptacle Circuit	17-101 thru 17-106
Gyro Horizon Indicator Circuit	17-136
Heated Pitot & Stall Warning Transmitter Circuit	17-92
Instrument Lights Circuits	17-116 thru 17-118
Landing Light Circuit	17-121, 17-122
Magnetos Circuit	17-105 thru 17-107
Map Light Circuit	17-108
Navigation Lights Circuits	17-127 thru 17-130
Oil Dilution Circuit	17-111
Oil Pressure Indicator Circuit	17-114
Radio Dial Lights Circuit	17-170 thru 17-172
Rotating Beacon Circuit	17-123
Stall Warning Circuit	17-132, 17-133
Starter Circuit	17-101 thru 17-106
Taxi Light Circuit	17-121, 17-122
Turn-and-Bank Indicator Circuit	17-134, 17-135

MODEL 185

	Page
Auxiliary Fuel Boost Pumps	17-140
Battery Circuit	17-138, 17-139
Cigar Lighter Circuit	17-141
Clock Circuit	17-138, 17-139
Compass Light Circuit	17-140
Courtesy Lights Circuit	17-141
Cylinder Head Temperature Gage Circuit	17-140
Dome Light Circuit	17-140, 17-77
Fuel Quantity Indicators Circuit	17-140
Generator Circuit	17-138, 17-139
Ground Service Receptacle Circuit	17-138, 17-139
Gyro Horizon Indicator Circuit	17-143
Instrument Lights Circuit	17-140
Landing Light Circuit	17-142
Magneto Circuit	17-138, 17-139
Map Light Circuit	17-140
Navigation Lights Circuit	17-141
Oil Dilution Circuit	17-141
Radio Dial Lights Circuit	17-140
Rotating Beacon Circuit	17-142
Stall Warning Circuit	17-142
Starter Circuit	17-138, 17-139
Taxi Light Circuit	17-142
Turn-and-Bank Indicator Circuit	17-142

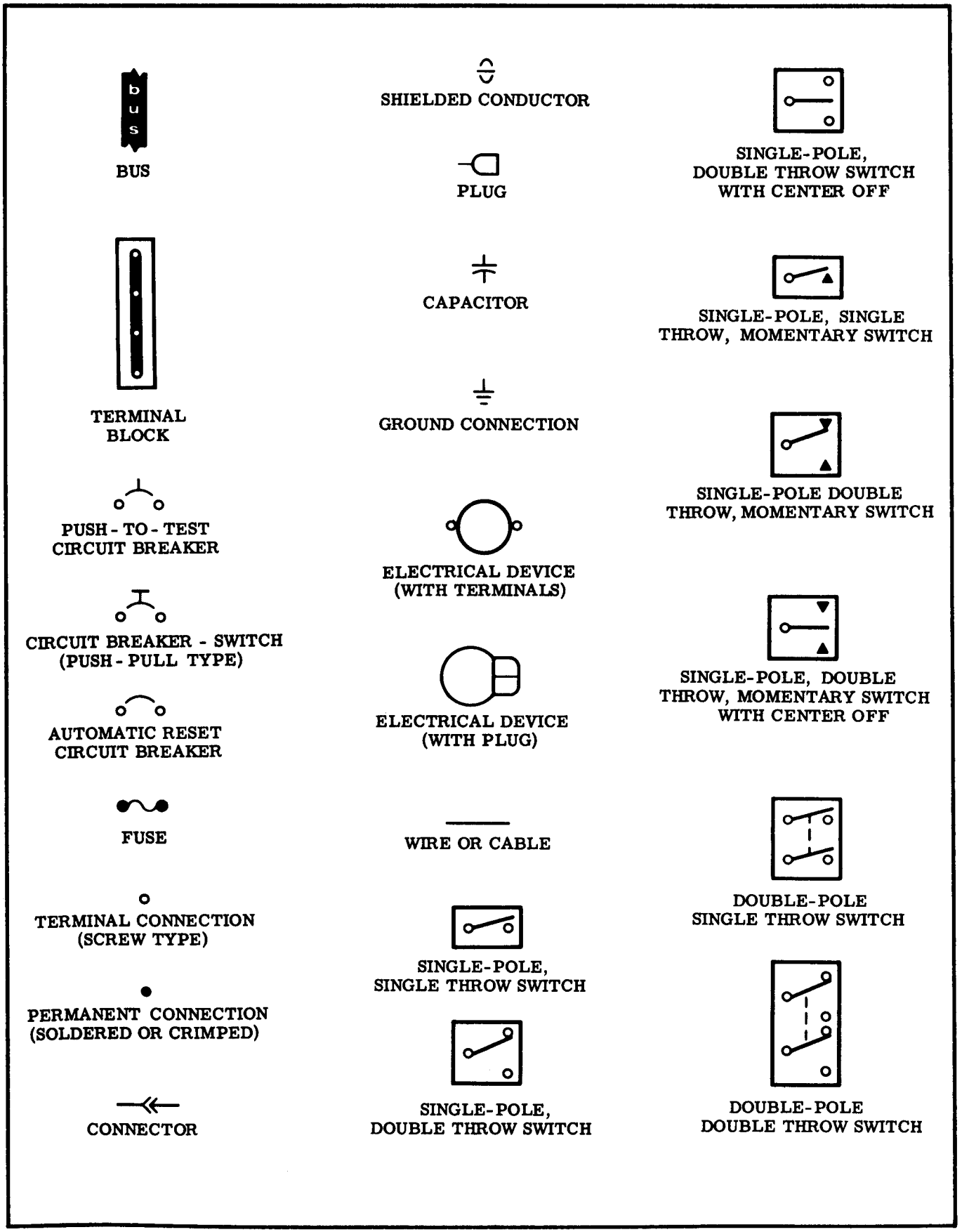

Figure 17-15. Symbols Chart (Sheet 1 of 4)

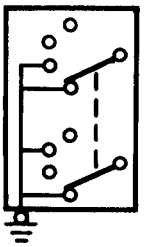

DOUBLE-POLE
FOUR POSITION SWITCH

VS

VENDOR SUPPLIED
TO CESSNA

PUSH-BUTTON SWITCH
MOMENTARY

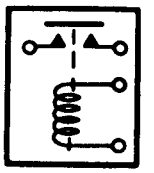

SOLENOID

BATTERY

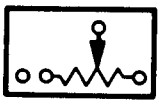

RHEOSTAT
WITH OFF
POSITION

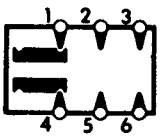

THREE POSITION
TWO CIRCUIT
PULL SWITCH

RESISTOR

MAGNETO

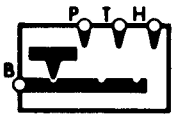

THREE POSITION
PULL SWITCH

SPEAKER OR HORN

DIODE

PRESS-TO-TEST
LIGHT

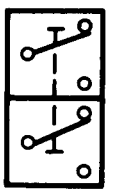

INTERLOCKING, SPLIT-
ROCKER TYPE SWITCH

NOTE: THE INTERLOCKING SPLIT ROCKER TYPE SWITCH IS MADE UP OF TWO SINGLE-POLE, DOUBLE THROW SWITCHES WHICH HAVE BEEN MECHANICALLY INTERCONNECTED TO PROVIDE A SINGLE SPLIT ROCKER TYPE SWITCH

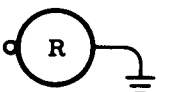

LIGHT

R= RED G = GREEN
W = WHITE, C = CLEAR

Figure 17-15. Symbols Chart (Sheet 2 of 4)

EXPLANATION OF CESSNA'S WIRE CODING SYSTEM

Wiring diagrams in this manual will only show the portion of the wire code number which follows the dash, except where duplication of wire numbers would exist. The number preceding the dash is a factory manufacturing code and normally is not necessary for circuit checking. This section contains wiring diagrams of factory installed electrical equipment only. If equipment has been installed in the field, some wire numbers may not correspond to the numbers supplied in this manual. If the situation exists, refer to the wiring diagrams supplied with the accessory kit instructions. Some accessory kits are now being issued which have wires prefixed with the letters AK.

1. The following schedule applies to the adoption of Cessna's wire coding system:

   a. All 1960 models and on, except the Models 150 and 185 which is applicable 1961 models and on.

2. Explanation of System.

   a. When Cessna uses several wiring diagrams for a model with a possibility of code number duplication, or when wiring diagrams are shown on Cessna's optional equipment drawings, the wire code number will consist of:

      1. An alphabetical character representing the aircraft model.
      2. The last three digits of the engineering drawing on which the wiring schematic is shown.
      3. A dash.
      4. An alphabetical character representing the general circuit function, and assigned in accordance with Paragraph 3.
      5. An alphabetical character representing the specific circuit within the general circuit function; and assigned in accordance with Paragraph 3.
      6. A numerical digit or digits assigned in sequence beginning with one(1) identifying individual wires within the circuit.
      7. Example:

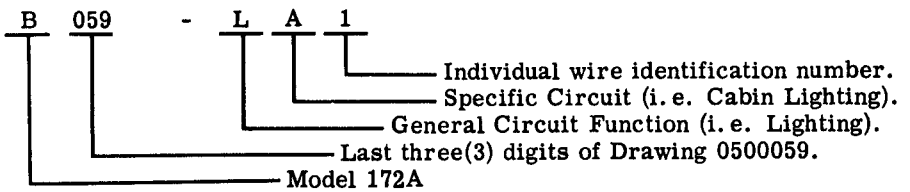

      8. When Cessna uses only one wiring diagram for a model, or when there is no possibility of code number duplication if more than one diagram is used, the code number shall be the same as described in Paragraphs 2a.1, thru 2a.7 except that the three(3) digits of the drawing will be omitted.

   b. If a wire or circuit is applicable to more than one model, each wire will be marked with the applicable model code letter(s).

      1. Example:

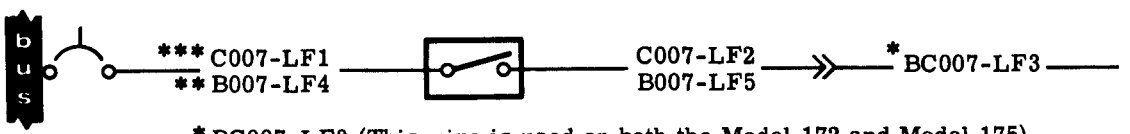

* BC007-LF3 (This wire is used on both the Model 172 and Model 175).

** B007-LF4 (This wire is used on the Model 172 only).

*** C007-LF1 (This wire is used on the Model 175 only).

      3. Circuit Function and Specific Circuit Code Letters:

         a. C - Control Surface -
            CC - Wing Flaps.

Figure 17-15. Symbols Chart (Sheet 3 of 4)

b. D - Instrument - (Other than flight or engine instruments) -
DA - Ammeter
DB - Flap Position Indicator
DC - Clock

c. E - Engine Instruments -
EA - Carburetor Air Temperature
EB - Fuel Quantity Gage and Transmitter
EC - Cylinder Head Temperature
ED - Oil Pressure

d. F - Flight Instruments -
FA - Turn & Bank
FB - Pitot Static Tube Heater and Stall Warning Heater
FC - Stall Warning
FD - Speed Control System
FE - Indicator Lights

e. G - Landing Gear -
GA - Actuator
GB - Retraction
GC - Warning Device (Horn)
GD - Limit Switches
GE - Indicator Lights

f. H - Heating, Ventilating and De-icing -
HC - Cigar Lighter

g. J - Ignition -
JA - Magneto

h. K - Engine Control -
KA - Starter Control

i. L - Lighting -
LA - Cabin
LB - Instrument
LC - Landing
LD - Navigation
LE - Taxi
LF - Rotating Beacon
LG - Radio

j. P - D.C. Power -
PA - Battery Circuit
PB - Generator Circuit
PC - External Power Source

k. Q - Fuel and Oil -
QA - Auxiliary Fuel Pump
QB - Oil Dilution
QC - Engine Primer
QD - Main Fuel Pumps
QE - Fuel Valves

4. Model Code Letters:

a. The following table indicates the code letters that have been assigned to the various Cessna Models and the years that these codes are applicable to:

Model	Code Letter	Year
150	A	1961 and on
172	B	1960 and on
175	C	1960 and on
180 and 182	D	1960 and on
185	R	1961 and on

Figure 17-15. Symbols Chart (Sheet 4 of 4)

SHOP NOTES:

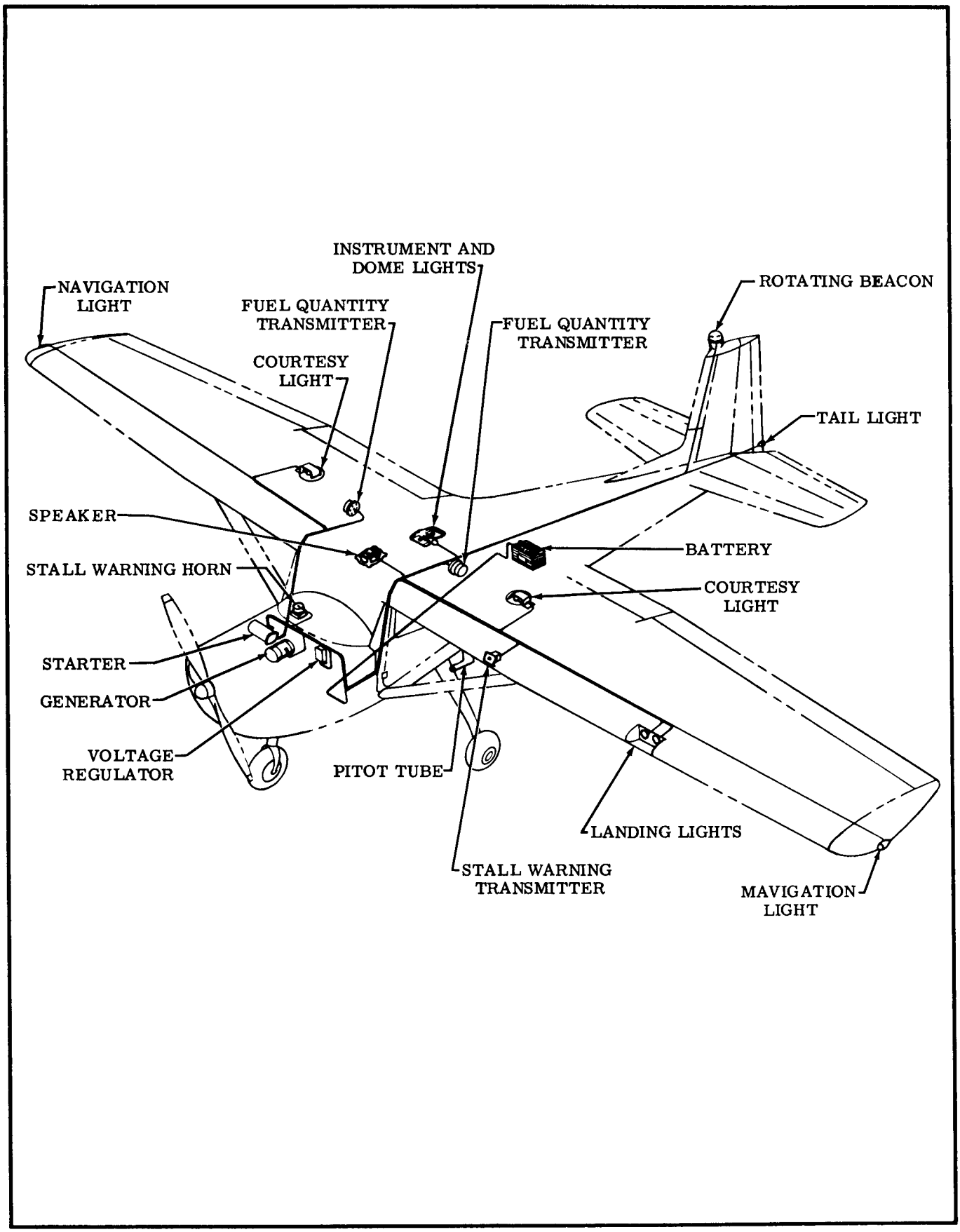

Figure 17-16. Electrical Equipment Installation - Model 150

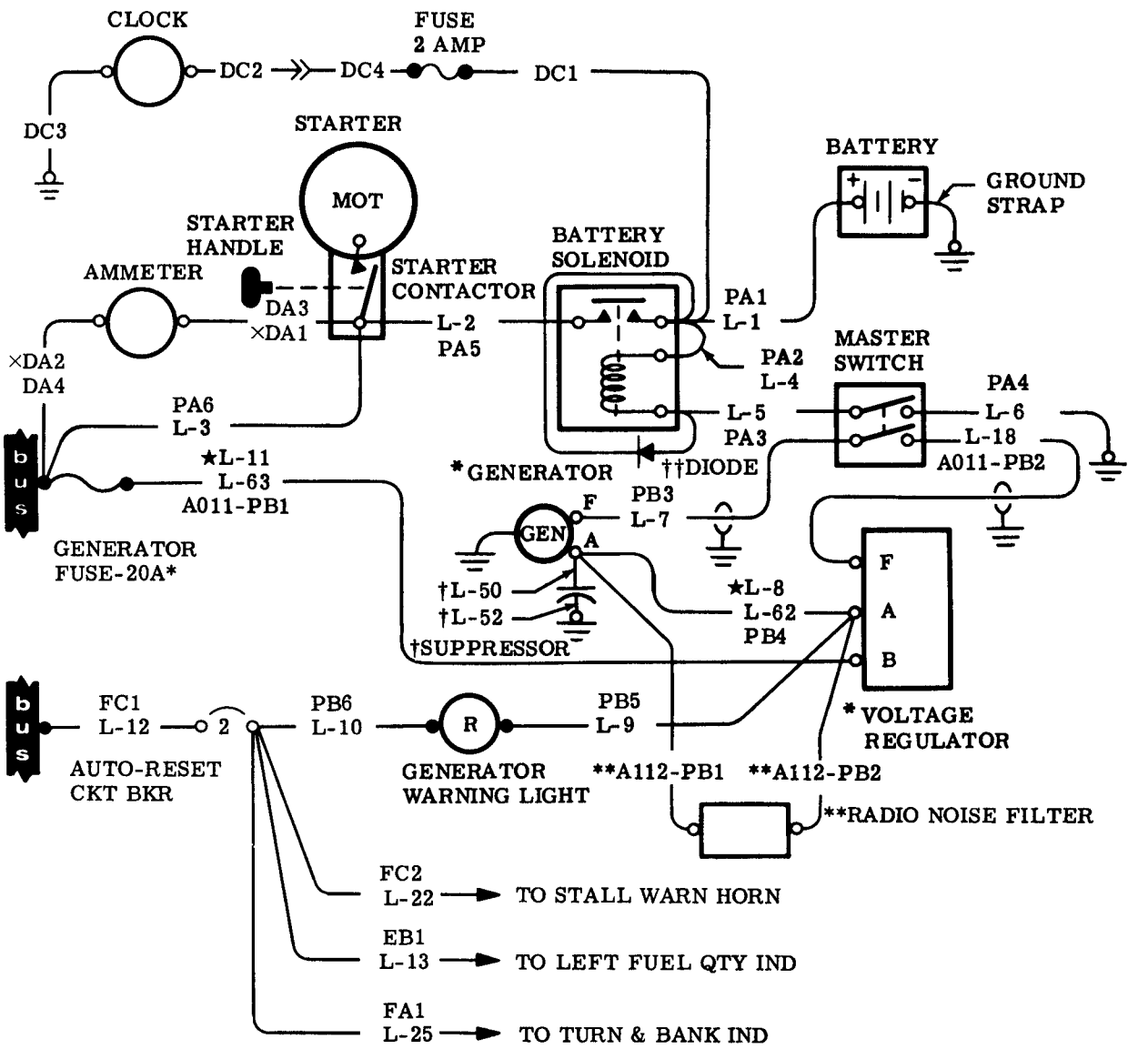

NOTES:
1. *A 35 AMP FUSE, GENERATOR AND VOLTAGE REGULATOR ARE STANDARD EQUIPMENT ON THE INTER-CITY COMMUTER (SERIALS 17684 AND ON) AND OPTIONAL EQUIPMENT ON THE STANDARD AND TRAINER MODELS (SERIALS 17684 AND ON).
2. †AS REQUIRED FOR NOISE SUPPRESSION ON SERIALS PRIOR TO 17684.
3. **AS REQUIRED FOR NOISE SUPPRESSION ON SERIALS 17684 AND ON.
4. ★SERIALS PRIOR TO 17684.
5. ALL WIRE NUMBERS PREFIXED WITH LETTER "L" ARE APPLICABLE TO SERIALS PRIOR TO 15059019, EXCEPT AS NOTED.
6. WHEN AMMETER IS INSTALLED, WIRE PA6 IS NOT USED.
7. ×USED ONLY ON AIRCRAFT WITH GYROS.
8. ††SERIALS 15059351 AND ON.

Figure 17-17. Battery, Starter, Generator, Voltage Regulator and Clock Circuits - Model 150

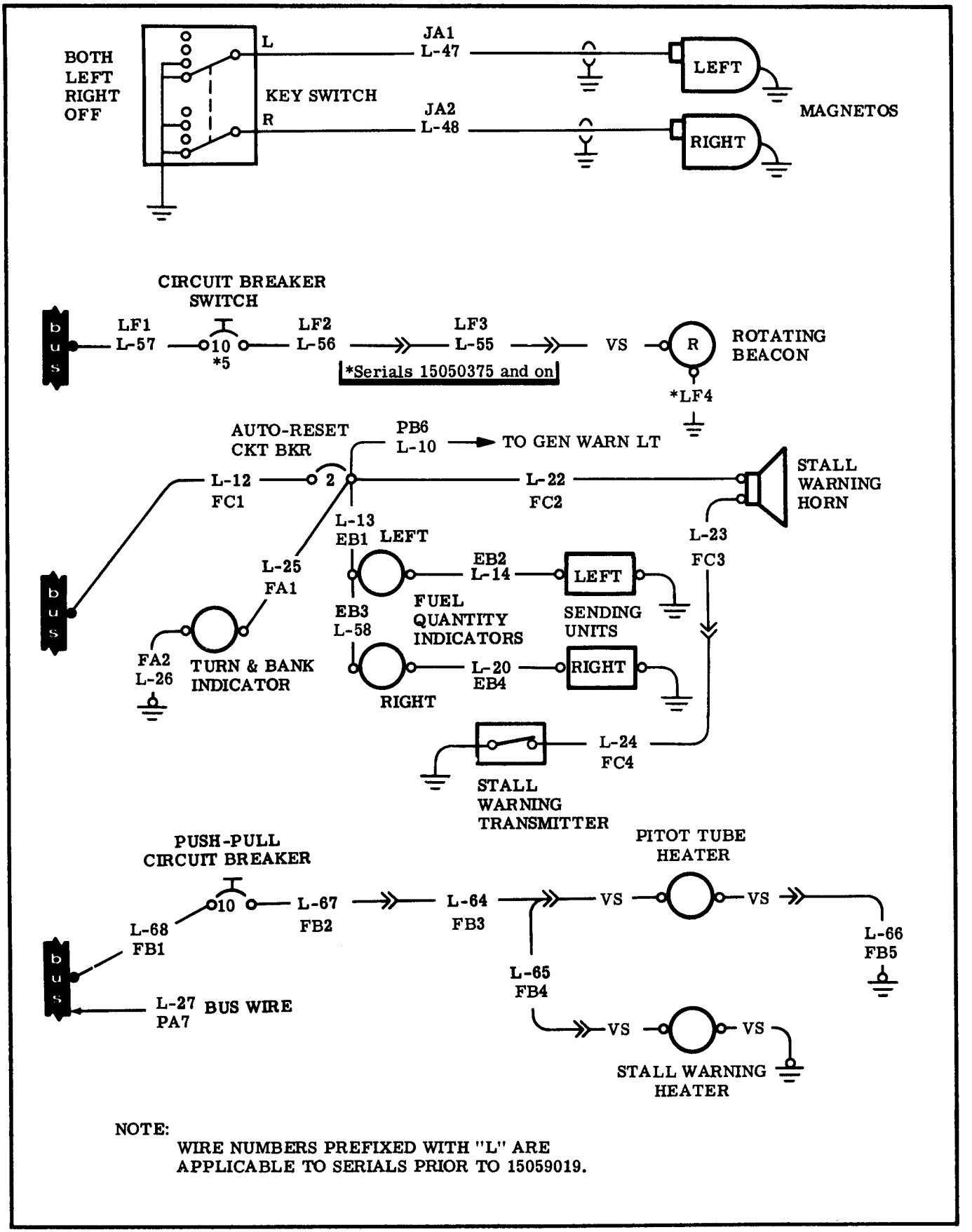

Figure 17-18. Magneto, Rot. Bcn, Turn and Bank Indicator, Stall Warn. and Fuel Ind. Ckts - Model 150

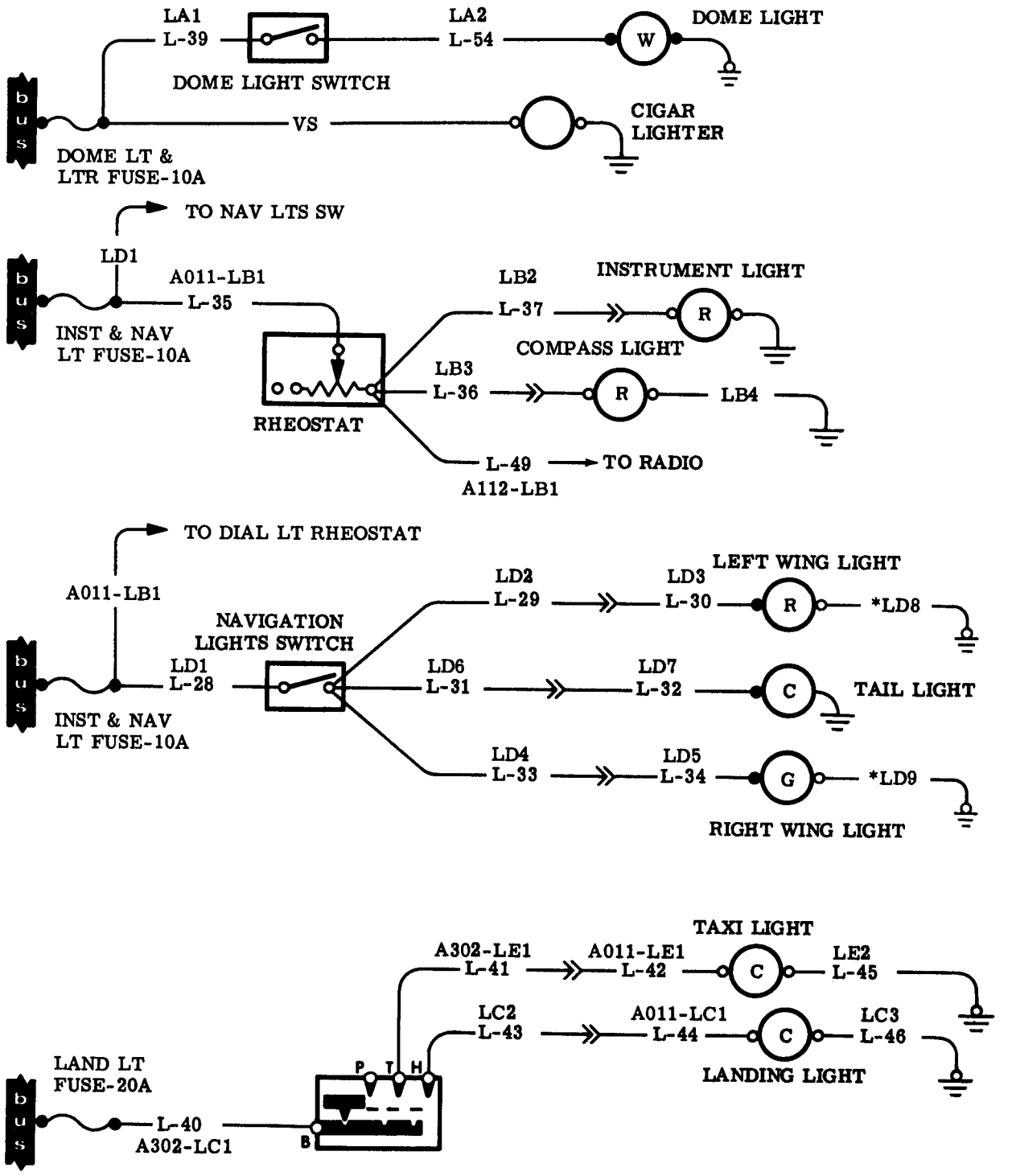

NOTE: WIRE NUMBERS PREFIXED WITH "L" ARE APPLICABLE TO SERIALS PRIOR TO 15059019. ASTERISKED (*) WIRE NUMBERS ARE APPLICABLE TO SERIALS 15059351 AND ON.

Figure 17-19. Dome Lt., Compass Lt., Inst. Lt., Nav. Lts., Cigar Ltr., Taxi and Ldg. Lts. Ckt. -Model 150

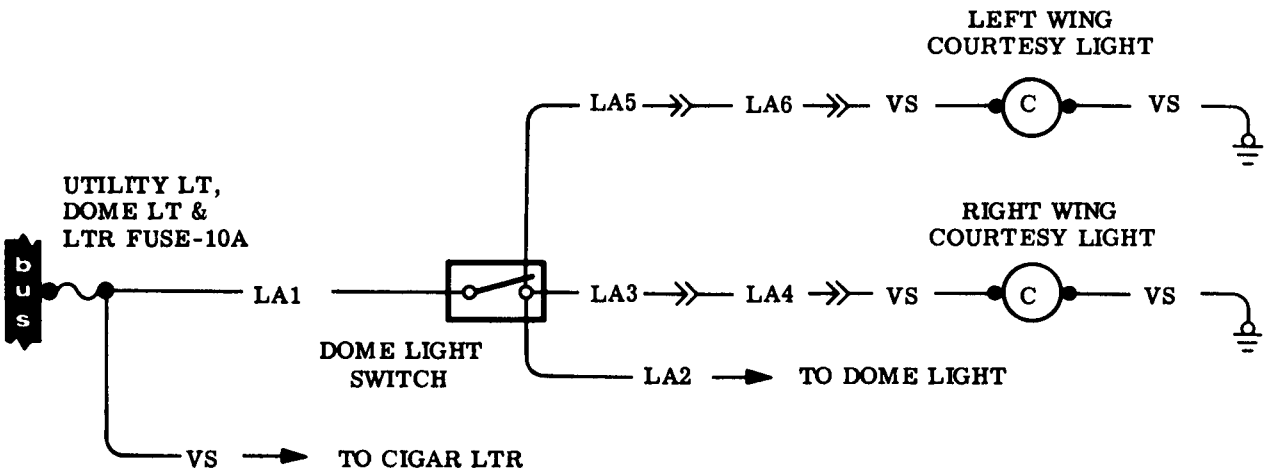

1962 AND ON
MODEL 150B Serials 15059351 and on

Figure 17-20. Courtesy Lights Circuit - Model 150

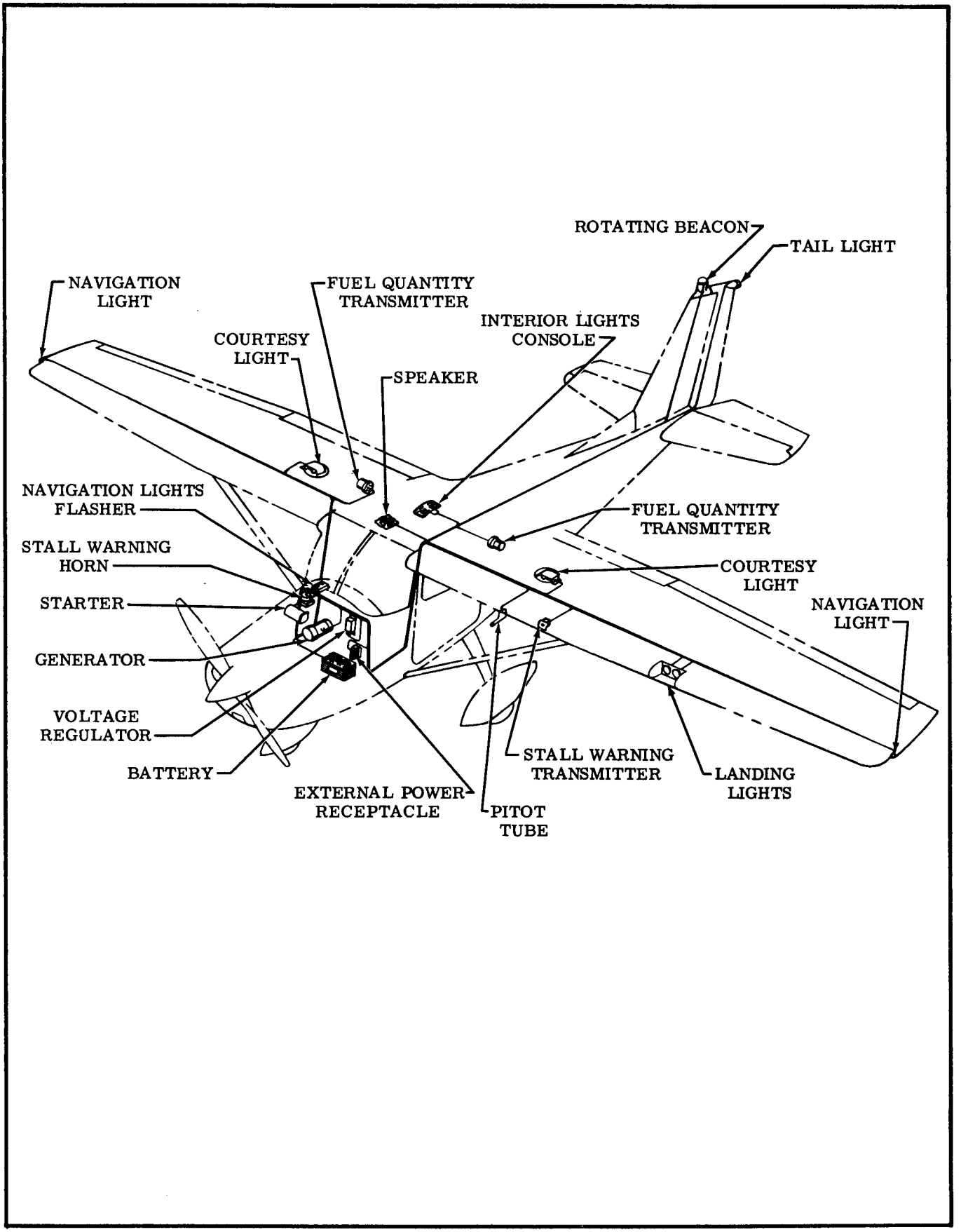

Figure 17-21. Electrical Equipment Installation - Model 172

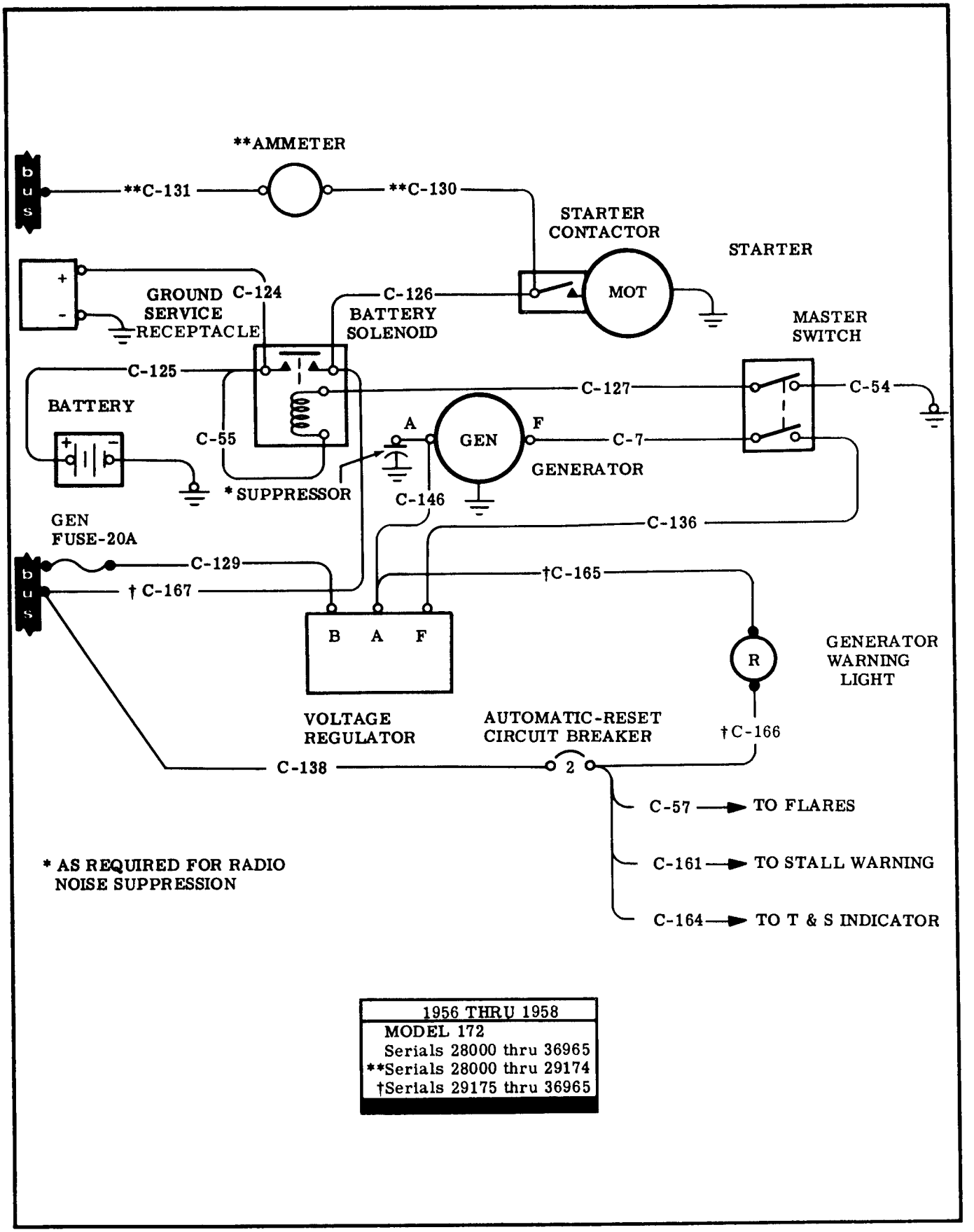

Figure 17-22. Bat., Gnd. Serv. Recpt., Gen., Start., Vol. Reg. and Clock - Model 172 (Sheet 1 of 3)

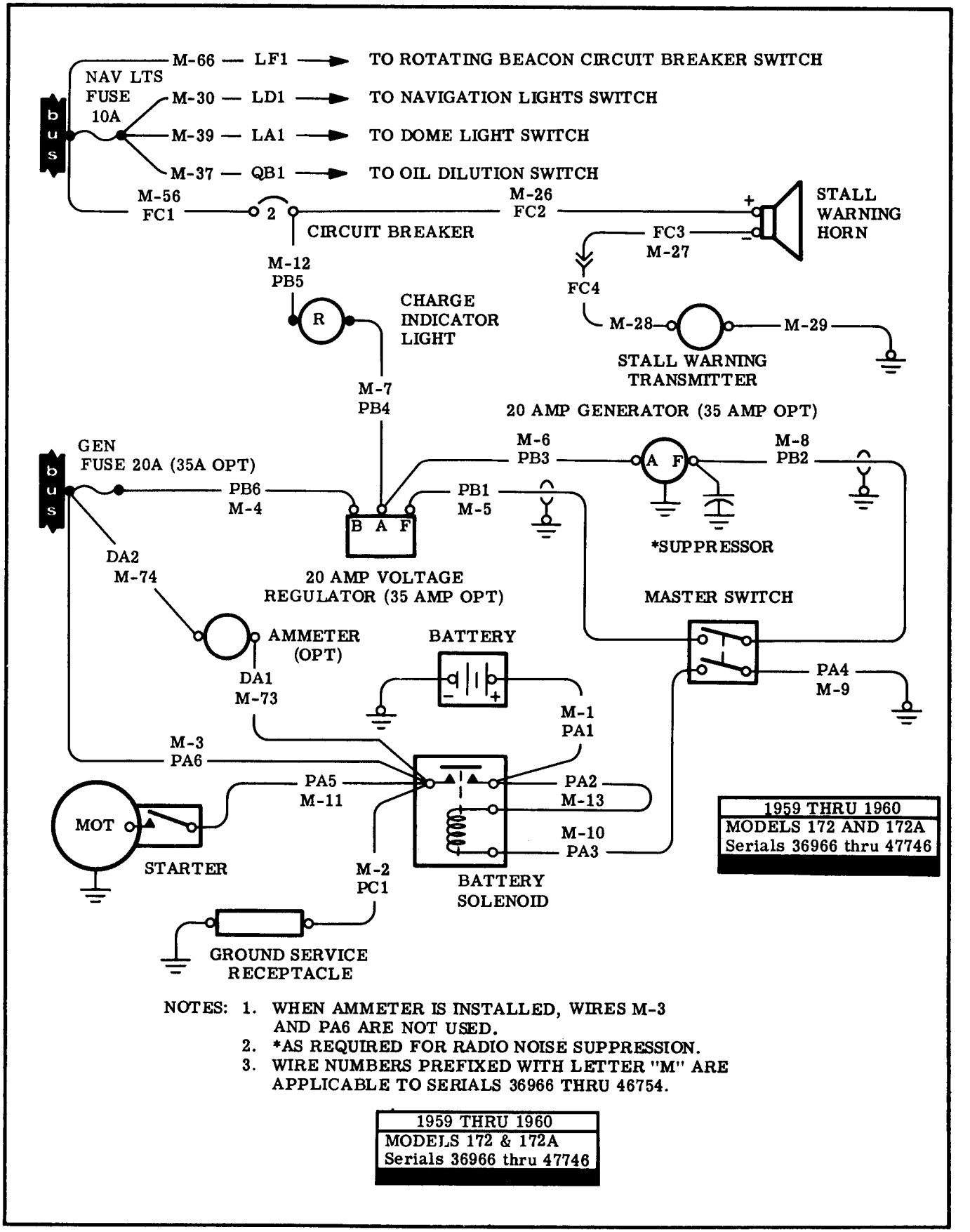

Figure 17-22. Bat., Gnd. Serv. Recpt., Gen., Start., Vol. Reg. and Clock - Model 172 (Sheet 2 of 3)

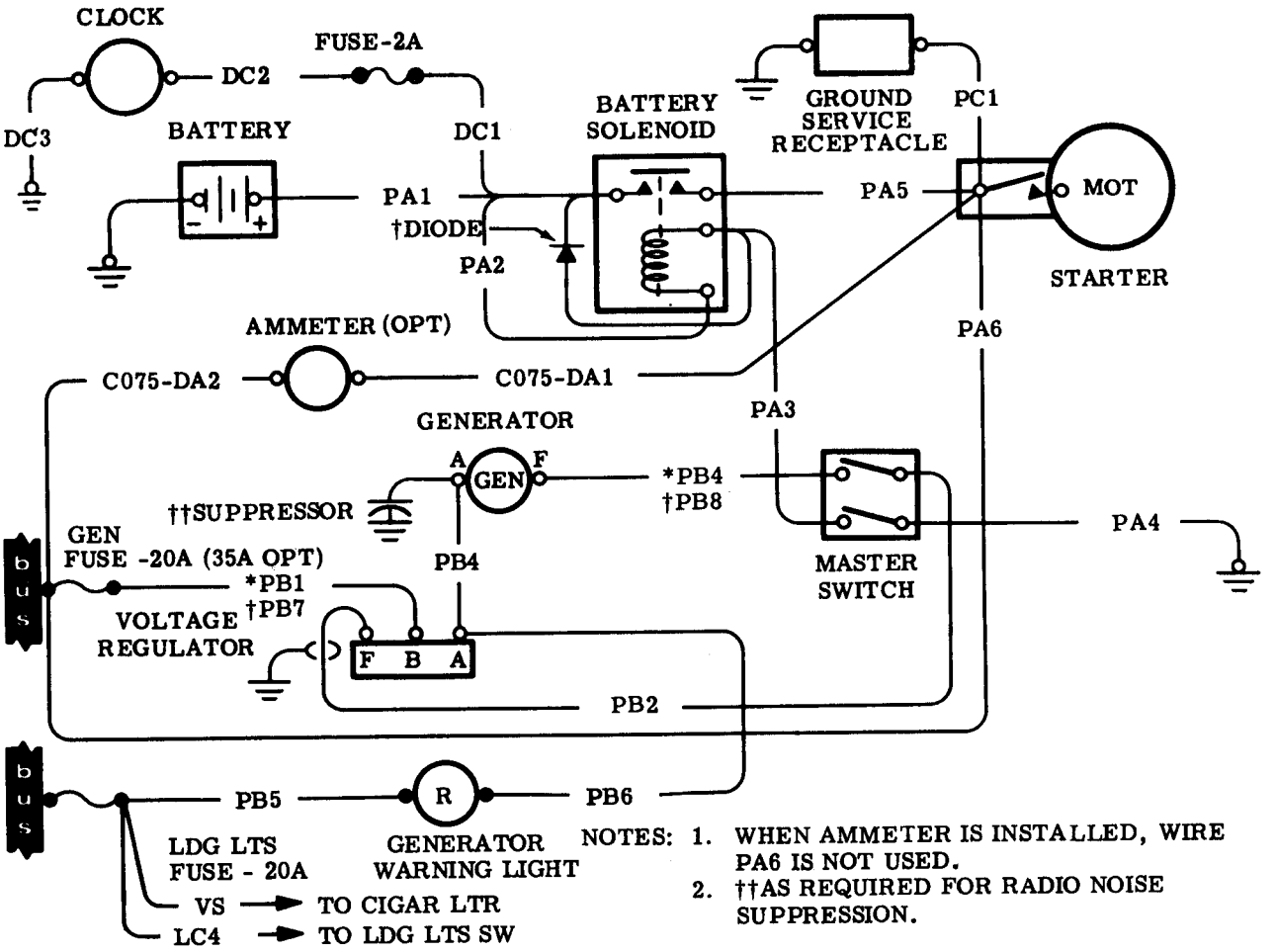

1961 AND ON
MODEL 172B AND ON
Serials 17247747 and on
*Serials 17247747 thru 17248734
†Serials 17248735 and on

Figure 17-22. Bat., Gnd. Serv. Recpt., Gen., Start., Vol. Reg. and Clock - Model 172 (Sheet 3 of 3)

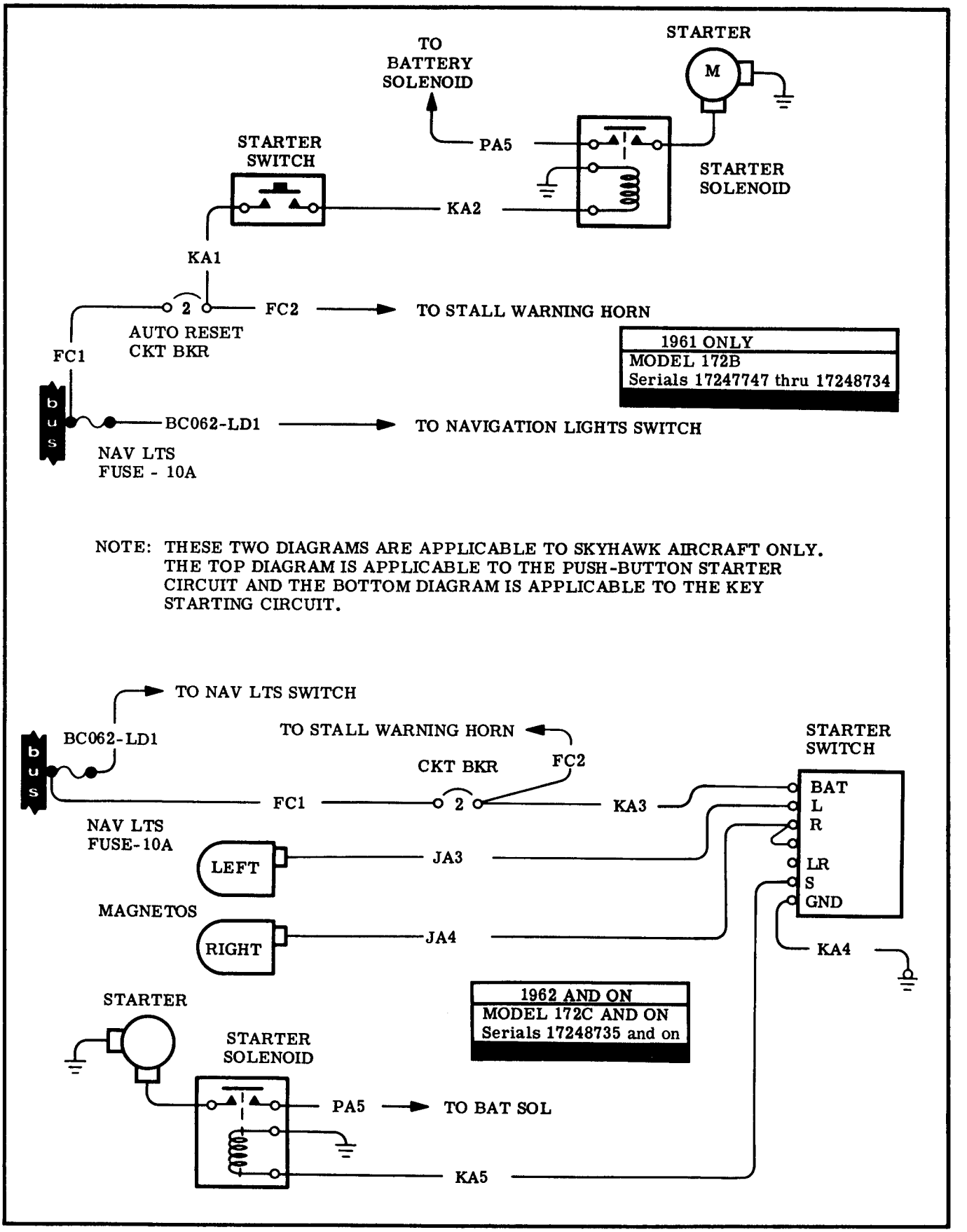

Figure 17-23. Push-Button and Key Starting Circuits - Model 172

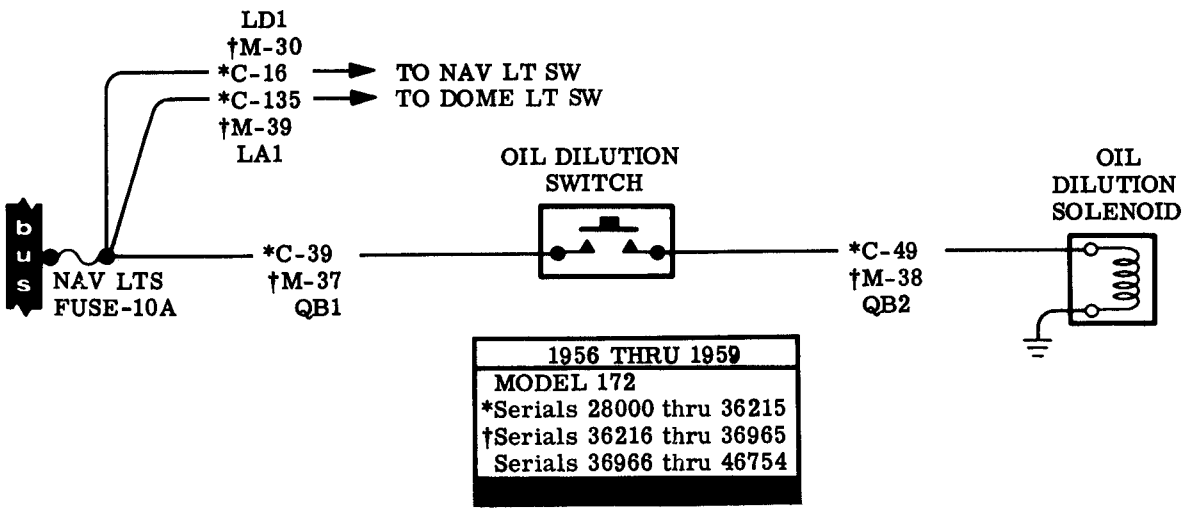

1956 THRU 1959
MODEL 172
*Serials 28000 thru 36215
†Serials 36216 thru 36965
Serials 36966 thru 46754

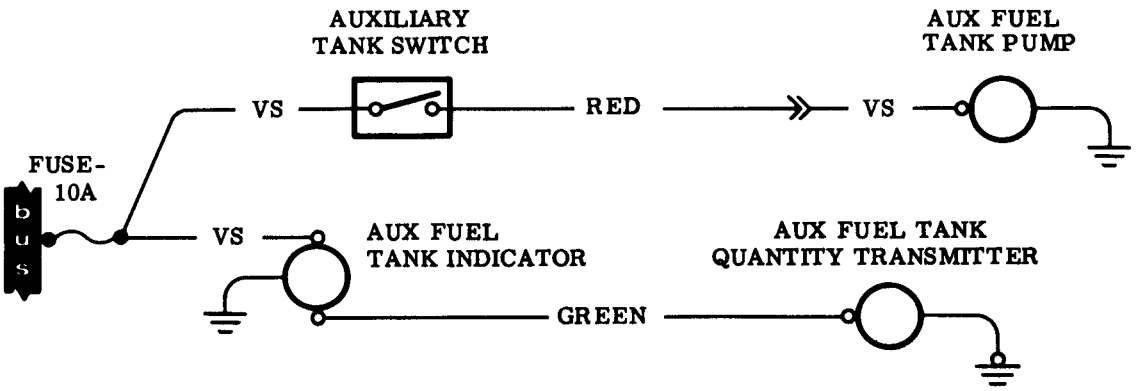

NOTES: ALL WIRES IN THE AUXILIARY FUEL TANK CIRCUIT ARE VENDOR FURNISHED. THE NAVIGATION LIGHT FUSE IS THE POWER SOURCE FOR THE AUXILIARY FUEL TANK CIRCUIT.

1958 AND ON
MODEL 172 AND ON
Serials 36216 and on

Figure 17-24. Oil Dilution and Auxiliary Fuel Tank Circuits - Model 172

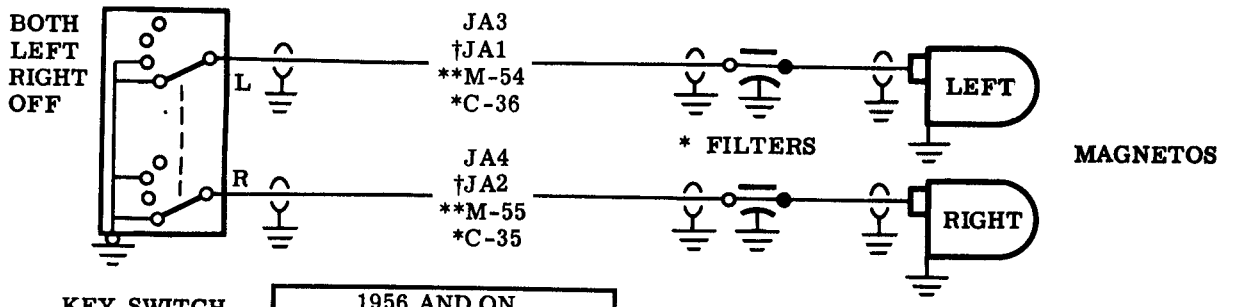

1956 AND ON
MODEL 172 AND ON
**Serials 28000 thru 36965
**Serials 36966 thru 46754
†Serials 46755 thru 47746
Serials 17247747 and on

* AS REQUIRED FOR RADIO NOISE SUPPRESSION

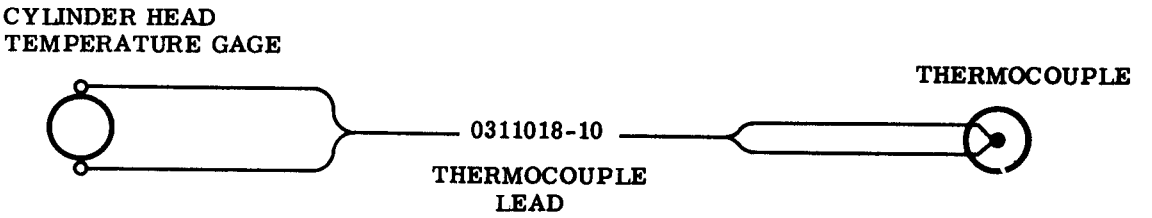

1960 AND ON
MODEL 172A AND ON
Serials 46755 and on

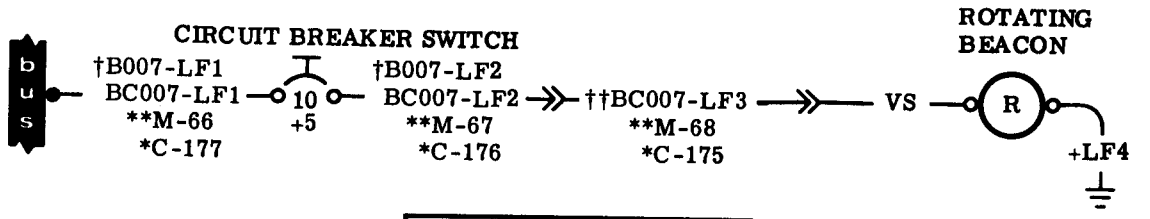

1956 AND ON
MODEL 172 AND ON
*Serials 28000 thru 36956
**Serials 36966 thru 46754
†Serials 46755 thru 47746
††Serials 46755 and on
+Serials 17248790 and on
Serials 17247747 and on

Figure 17-25. Magneto, Cyl. Head Temp. and Rot. Beacon Circuits - Model 172

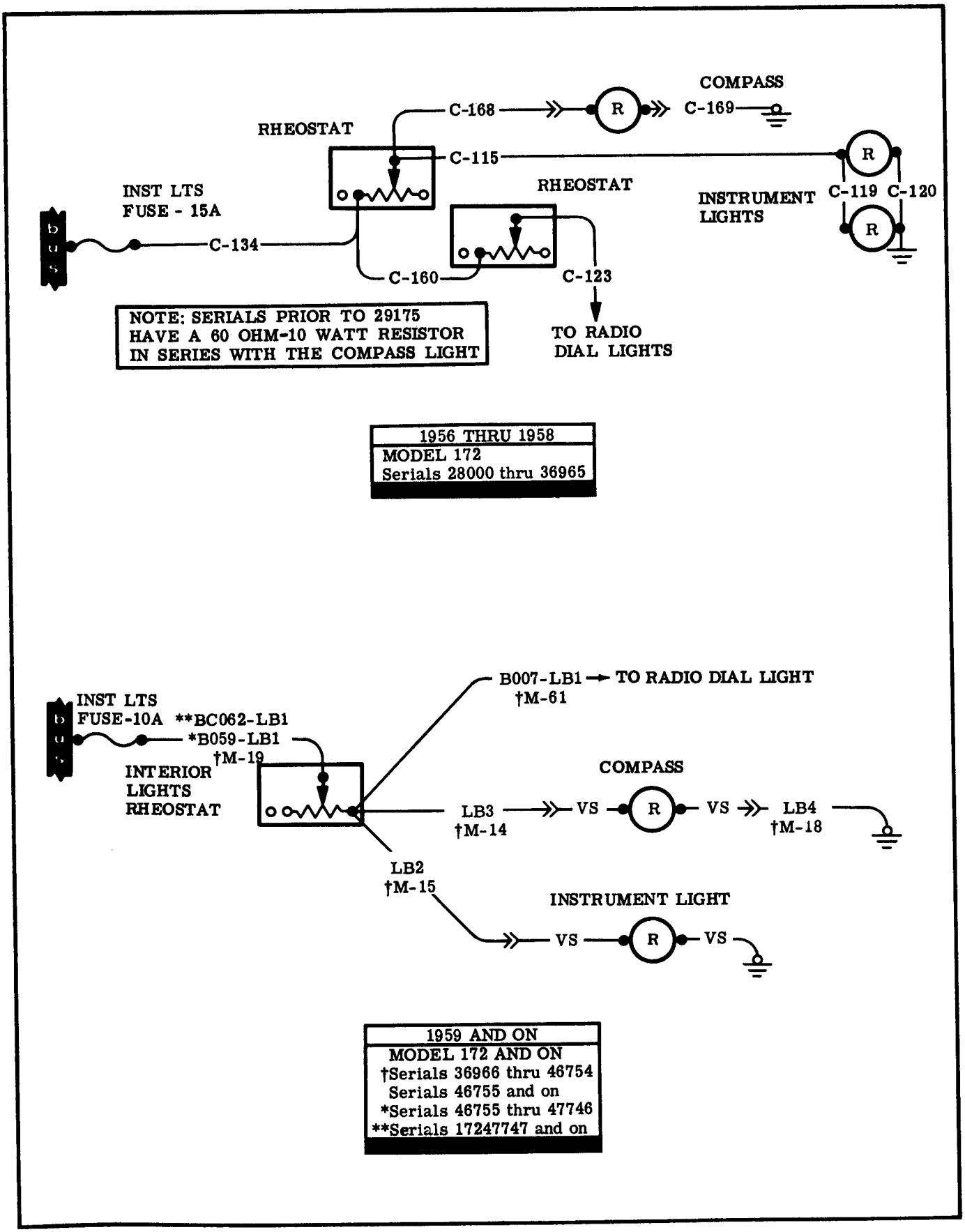

Figure 17-26. Compass and Instruments Lights Circuits - Model 172

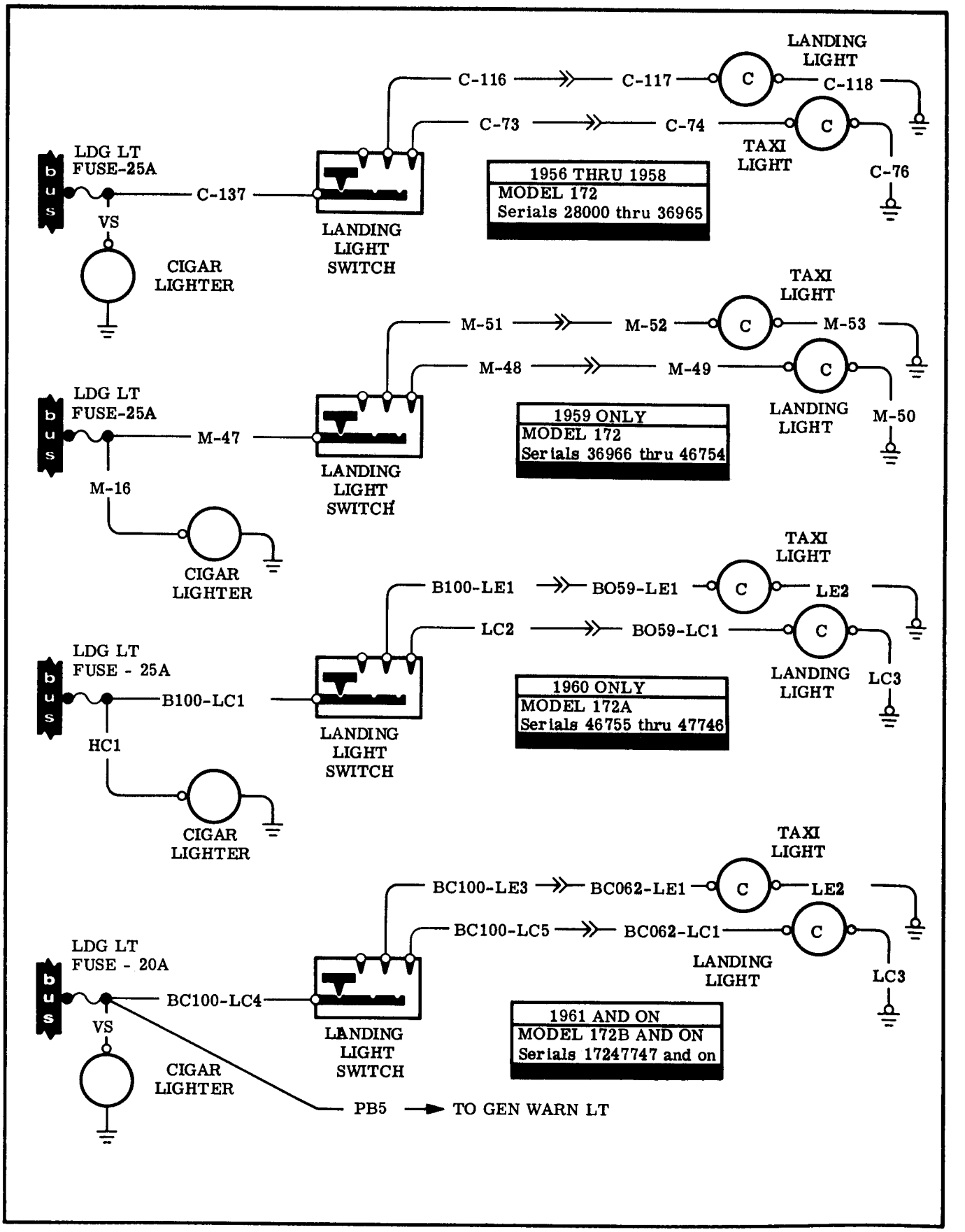

Figure 17-27. Cigar Lighter, Landing Light and Taxi Light Circuits - Model 172

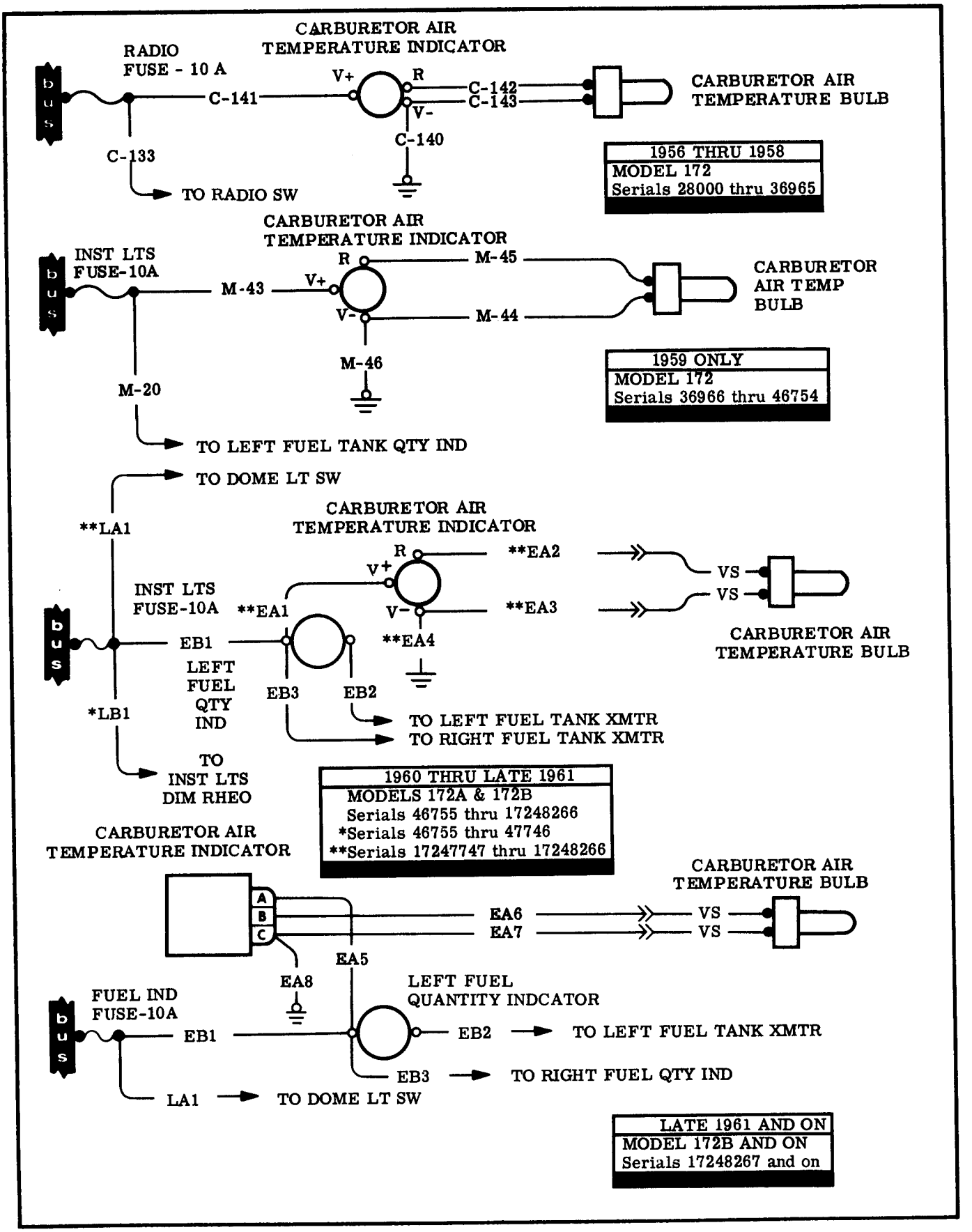

Figure 17-28. Carburetor Air Temperature Circuits - Model 172

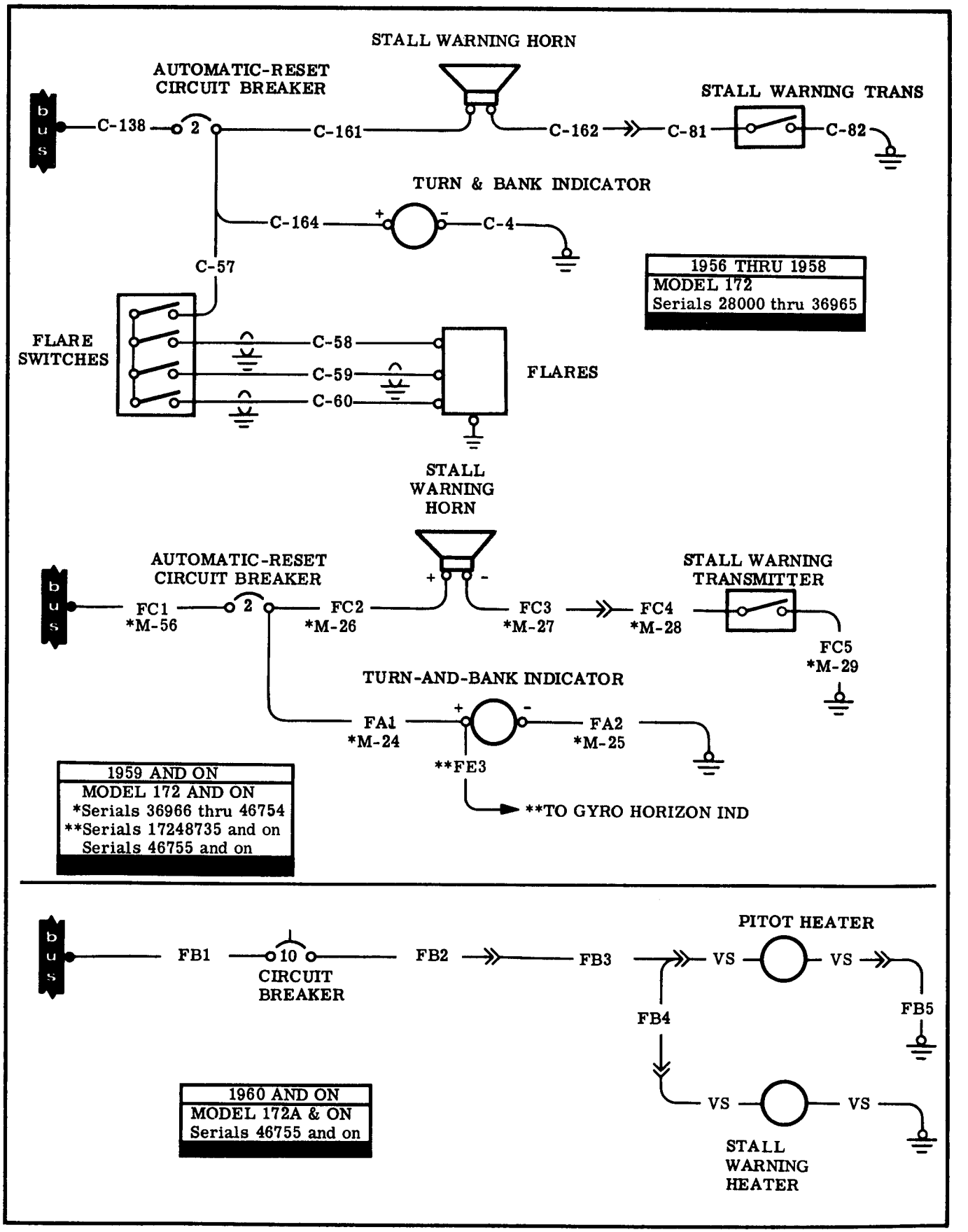

Figure 17-29. Stall Warning, Flares, Turn and Bank and Heated Pitot and Stall Warning Ckts - Model 172

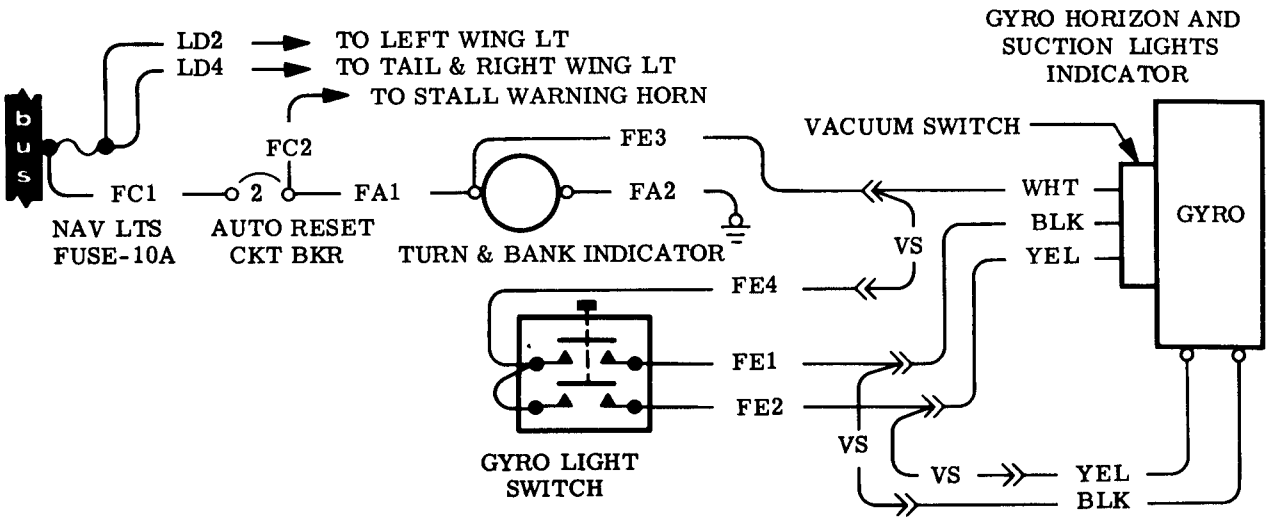

1962 AND ON
MODEL 172C & ON
Serials 17248735 and on

Figure 17-30. Gyro Horizon Indicator Circuits - Model 172

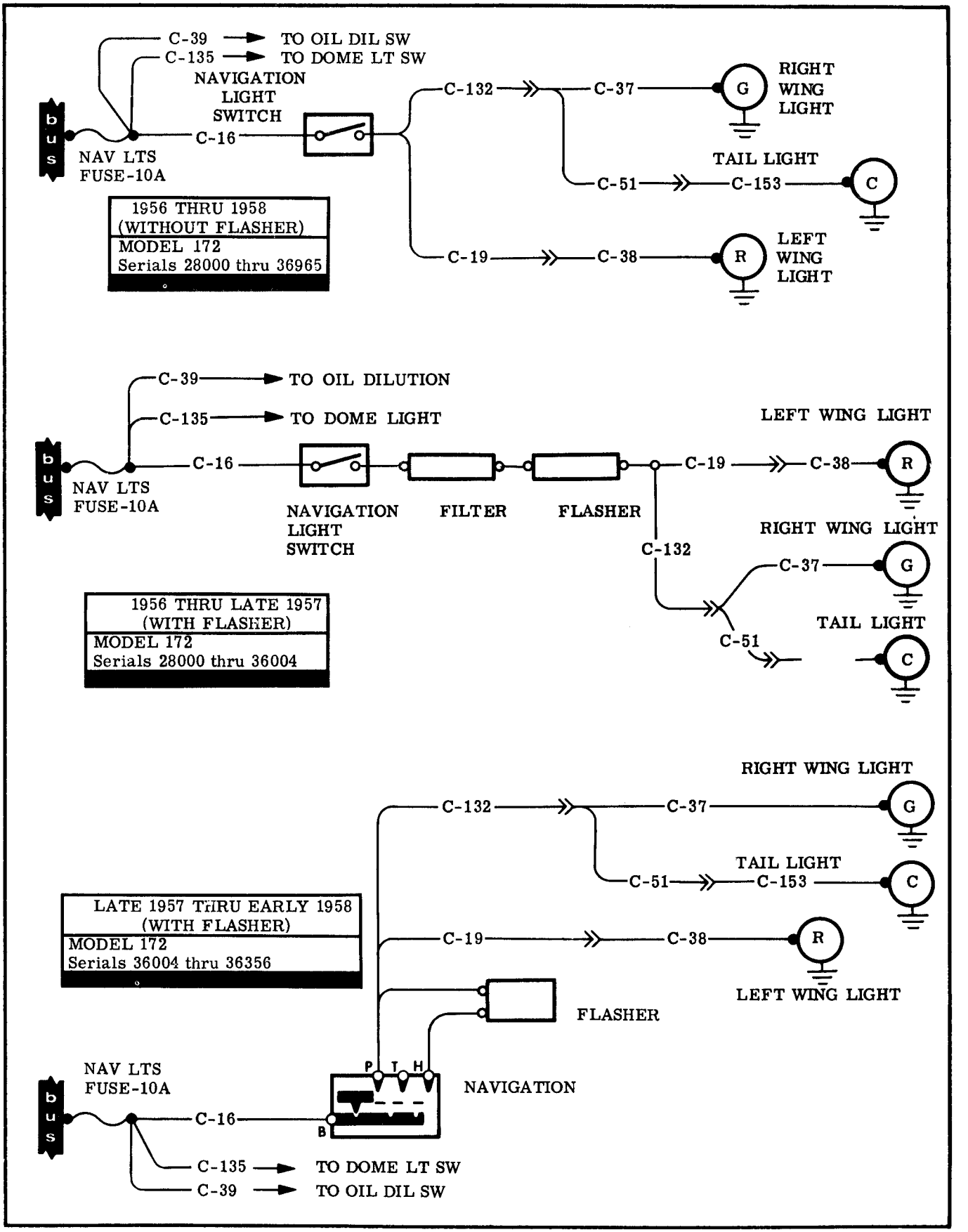

Figure 17-31. Navigation Lights Circuits - Model 172 (Sheet 1 of 3)

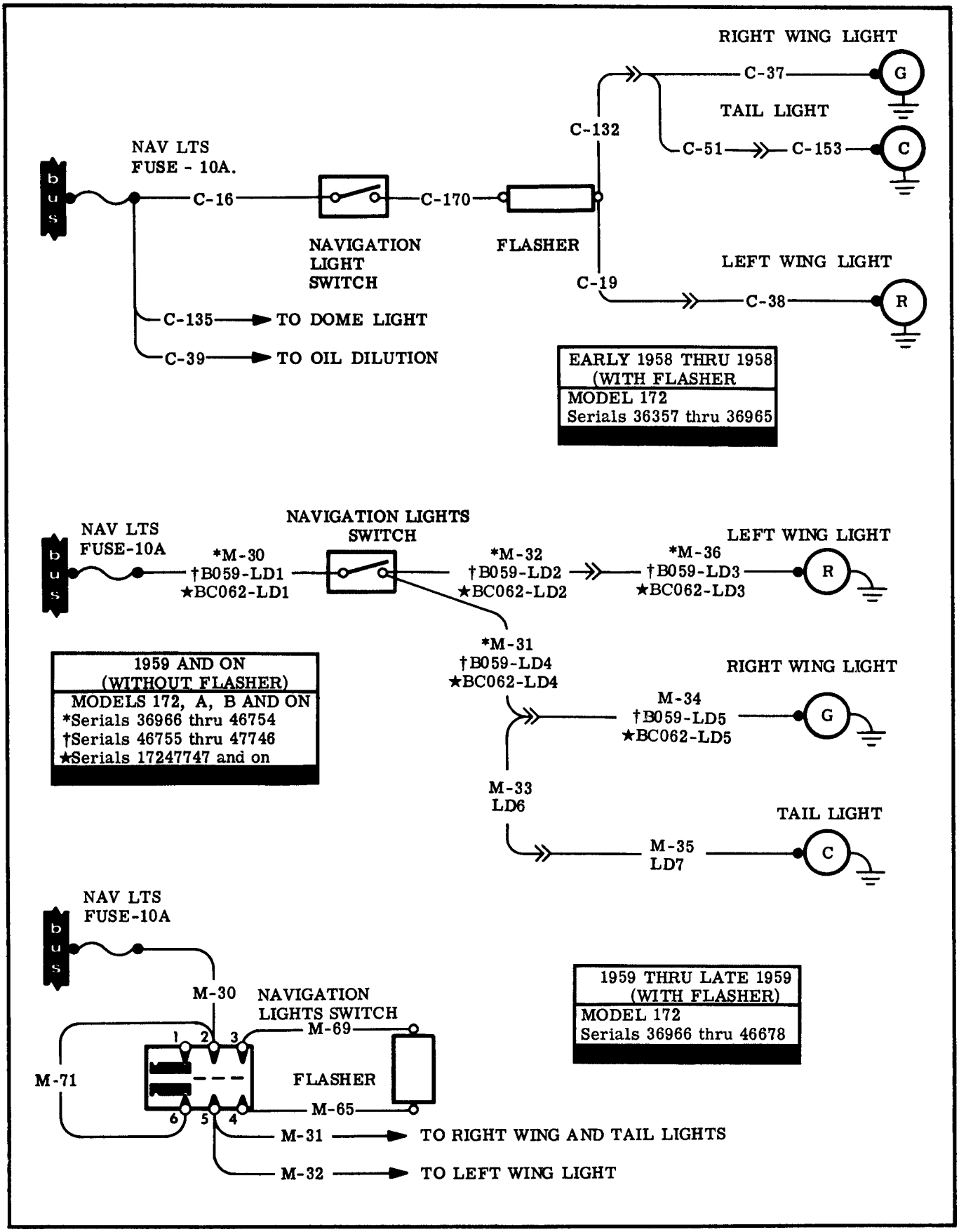

Figure 17-31. Navigation Lights Circuits - Model 172 (Sheet 2 of 3)

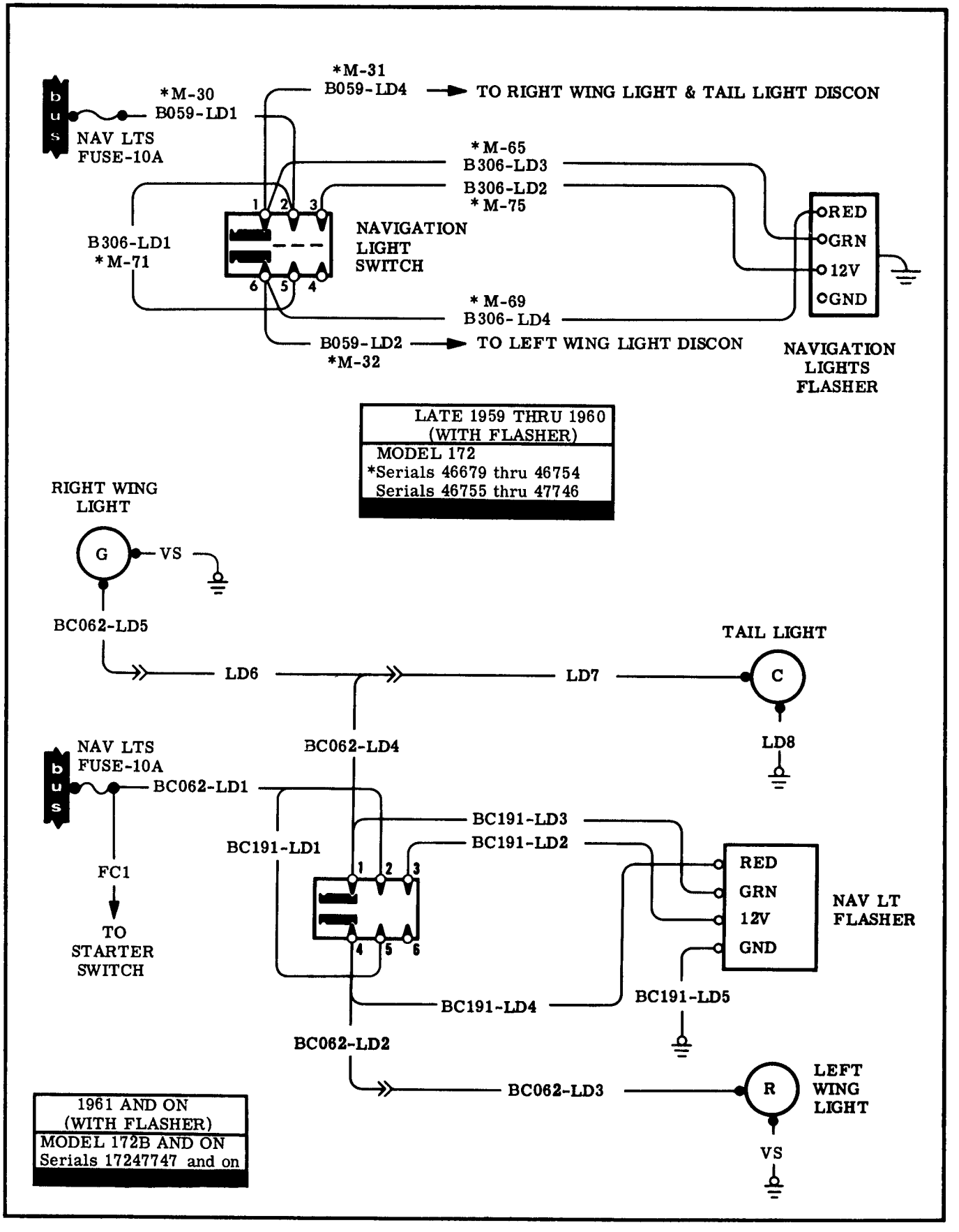

Figure 17-31. Navigation Lights Circuits - Model 172 (Sheet 3 of 3)

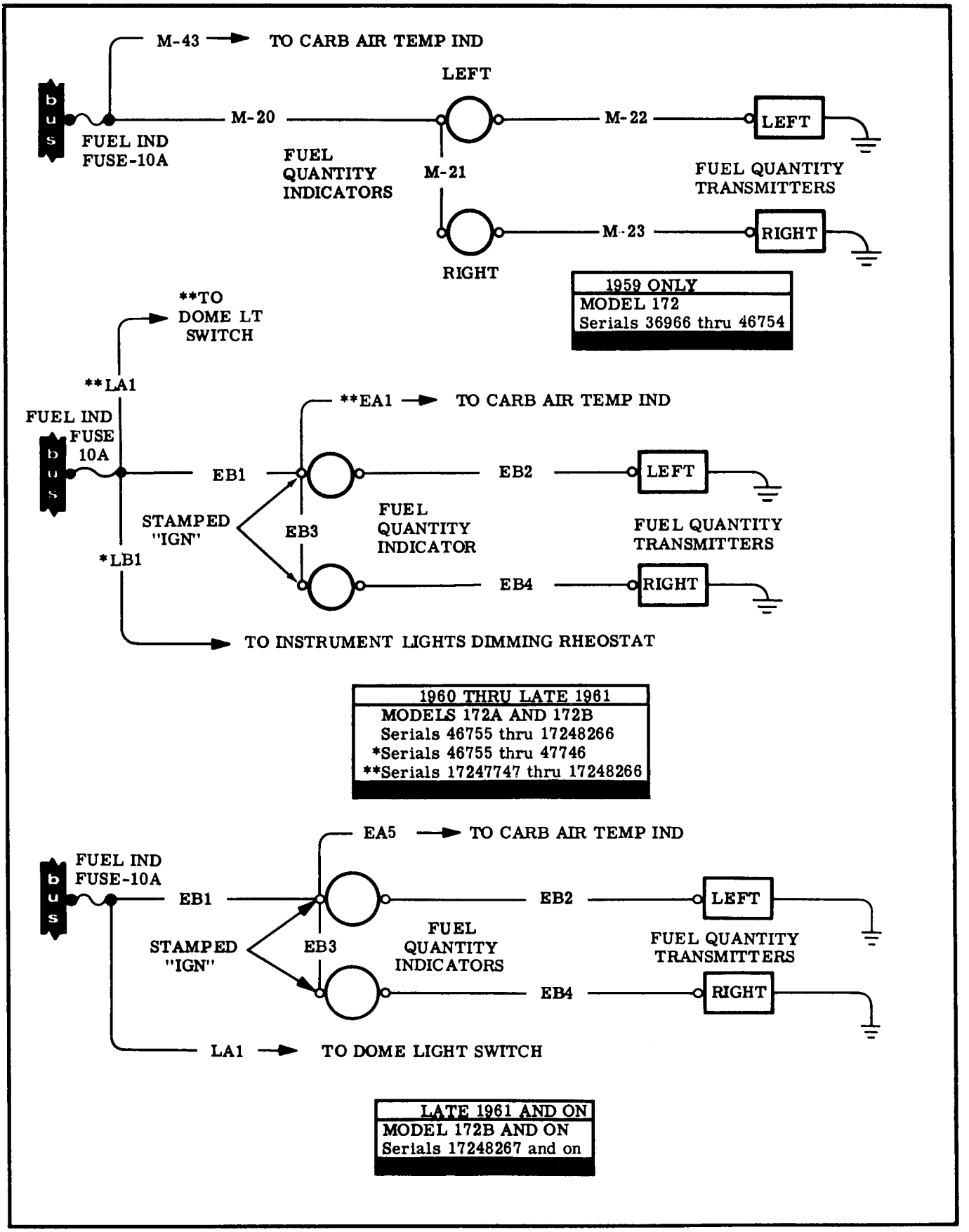

Figure 17-32. Fuel Quantity Circuits - Model 172

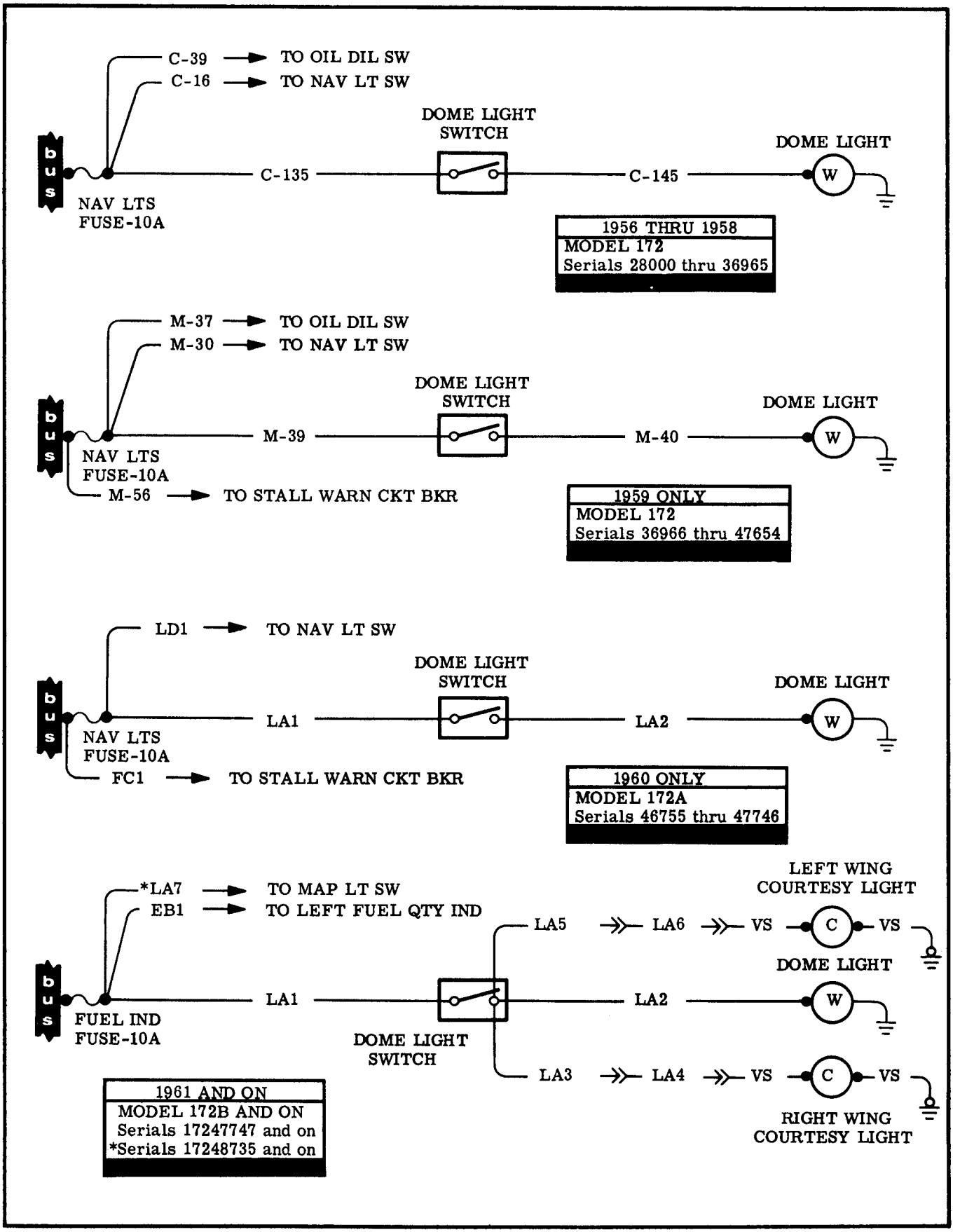

Figure 17-33. Dome Light and Courtesy Lights Circuits - Model 172

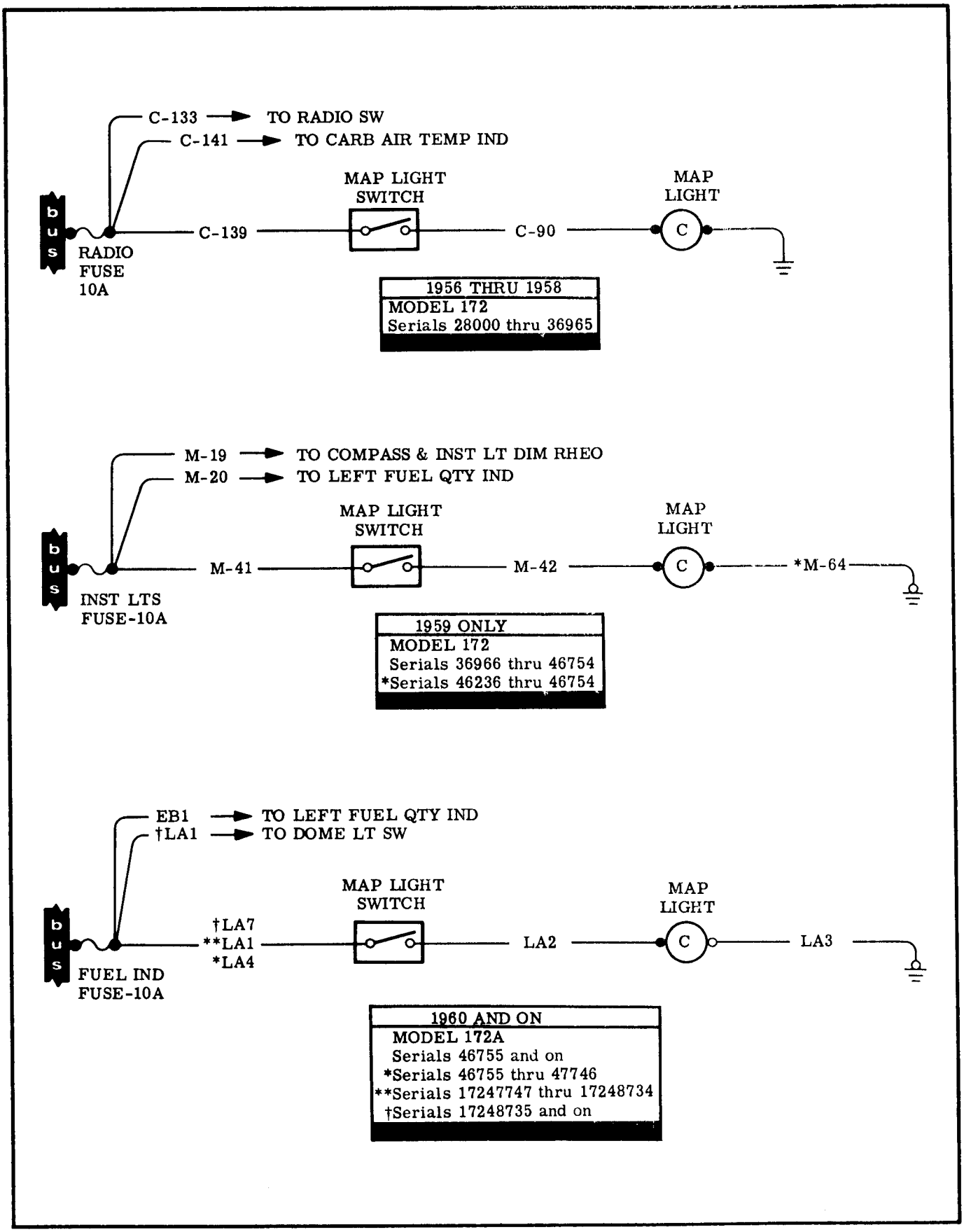

Figure 17-34. Map Light Circuits - Model 172

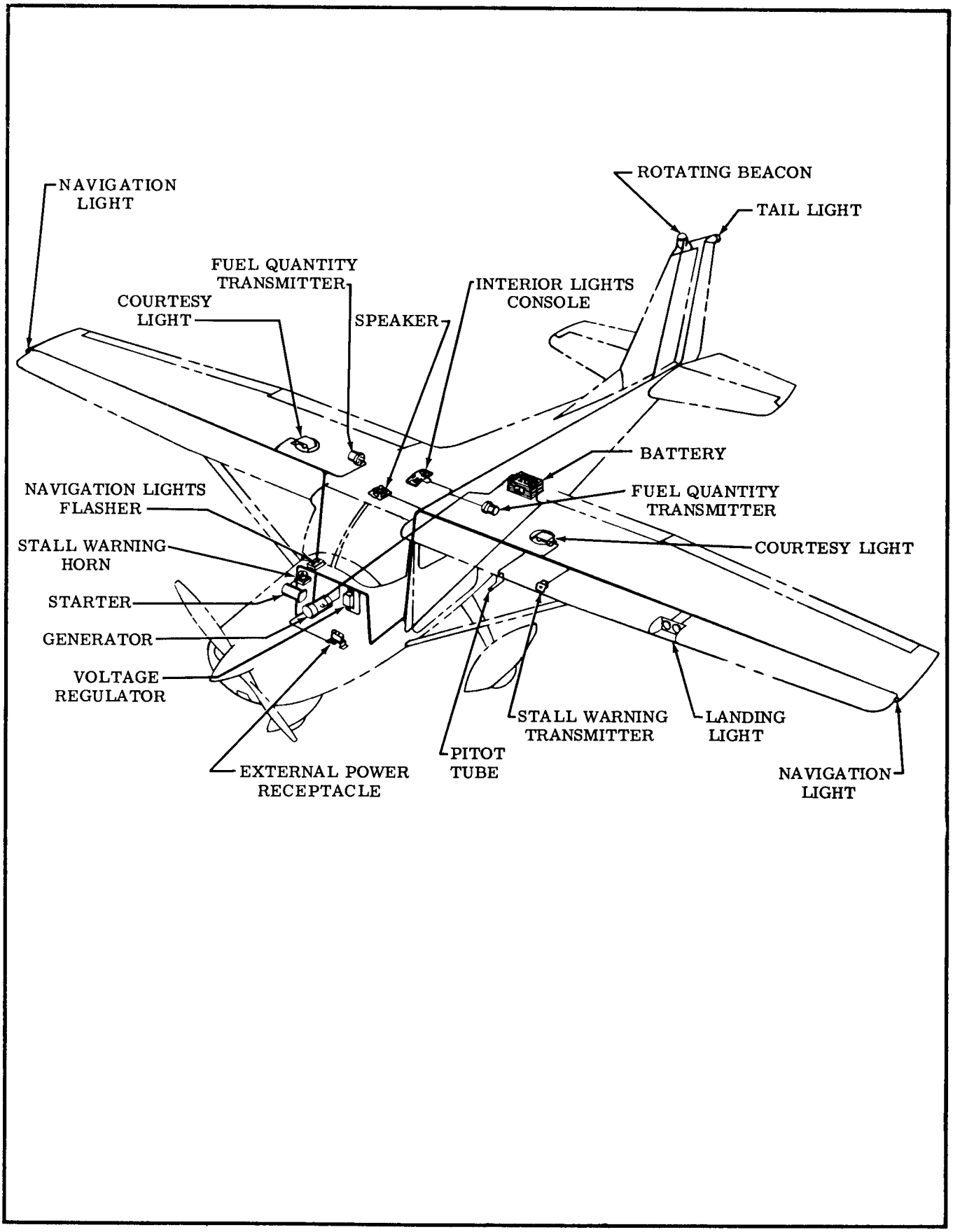

Figure 17-35. Electrical Equipment Installation - Model 175

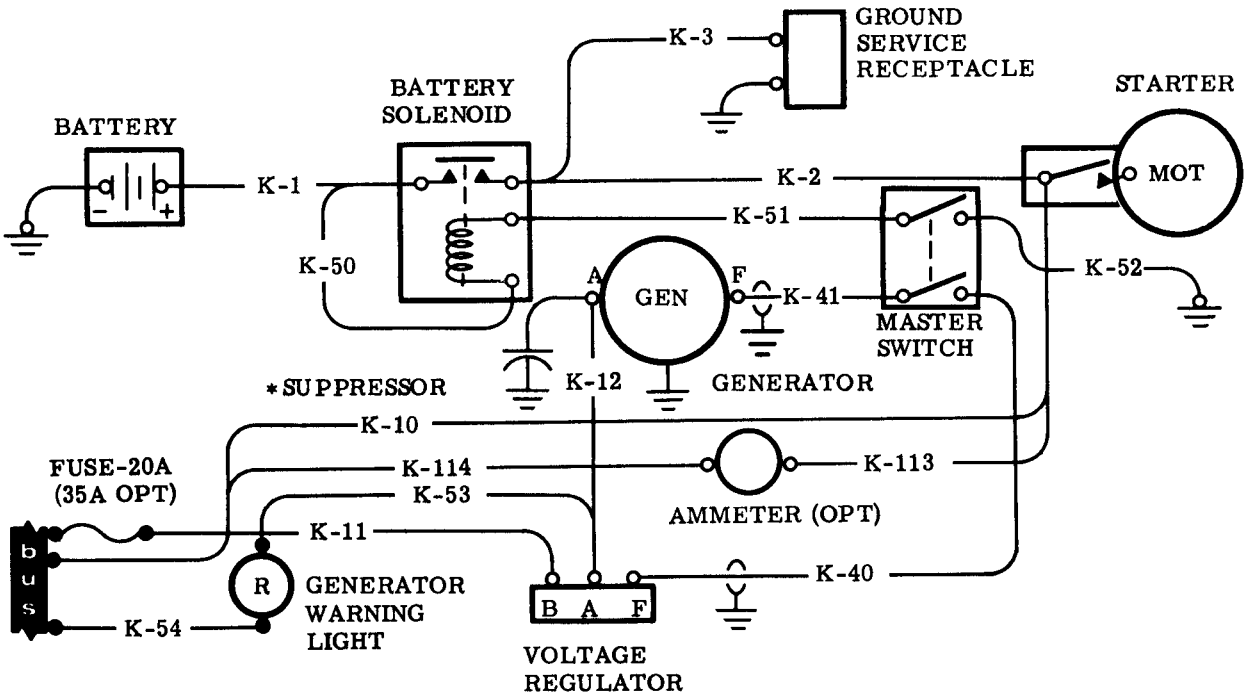

NOTES: 1. WHEN AMMETER IS INSTALLED, WIRE K-10 IS NOT USED.
2. *AS REQUIRED FOR RADIO NOISE SUPPRESSION.

1958 THRU 1959
MODEL 175 Serials 55001 thru 56238

Figure 17-36. Bat., Gnd. Ser. Recpt., Gen., Str., Vol. Reg. and Clock - Model 175 (Sheet 1 of 2)

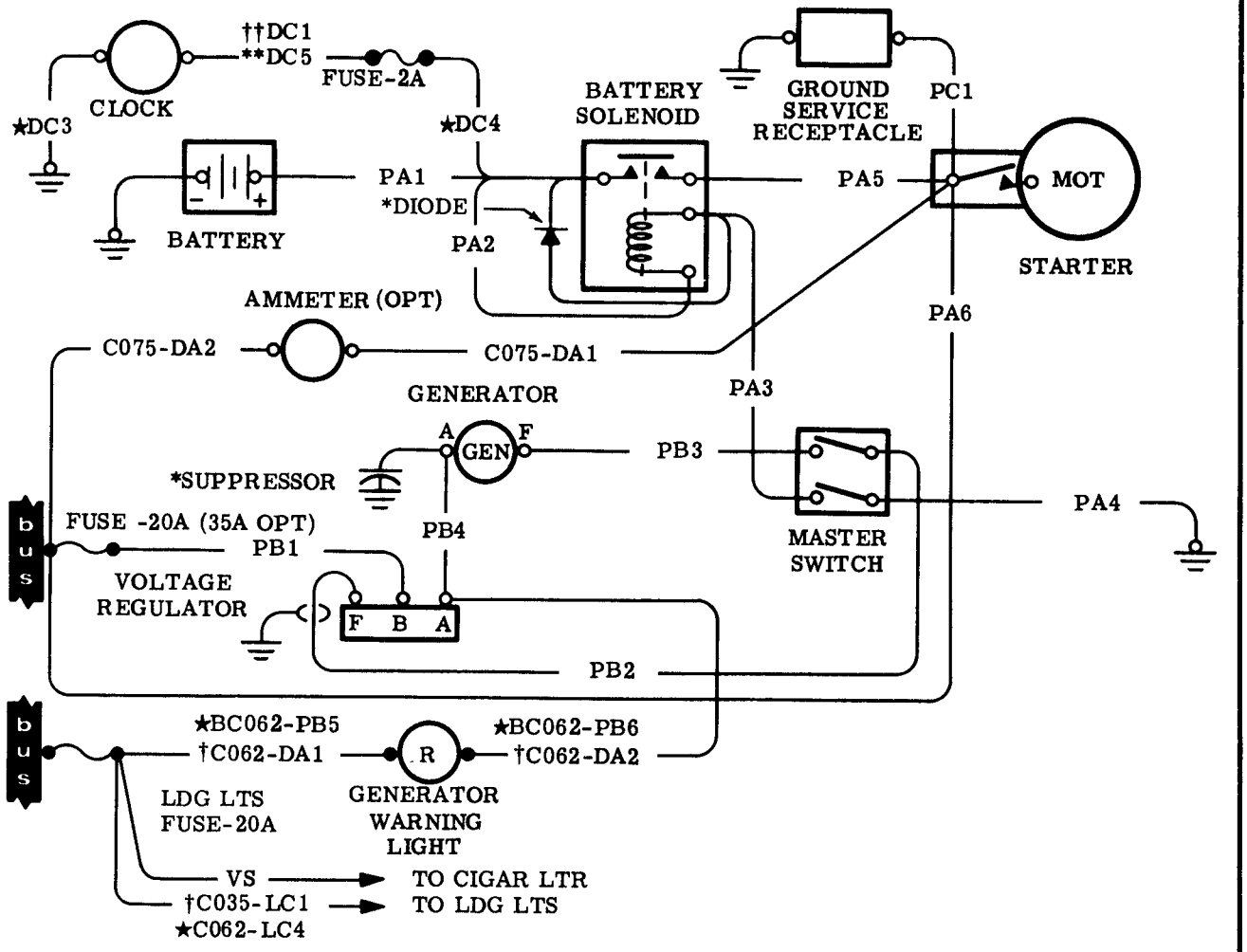

NOTES: 1. WHEN AMMETER IS INSTALLED, WIRE PA6 IS NOT USED.
2. *AS REQUIRED FOR RADIO NOISE SUPPRESSION.

1960 AND ON
MODELS 175A AND ON
Serials 56239 and on
†Serials 56239 thru 56777
**Serials 17556778 thru 17556794
★Serials 17556778 and on
††Serials 17556795 and on
*Serials 17557003 and on

Figure 17-36. Bat., Gnd, Ser. Recpt., Gen., Str., Vol. Reg. and Clock - Model 175 (Sheet 2 of 2)

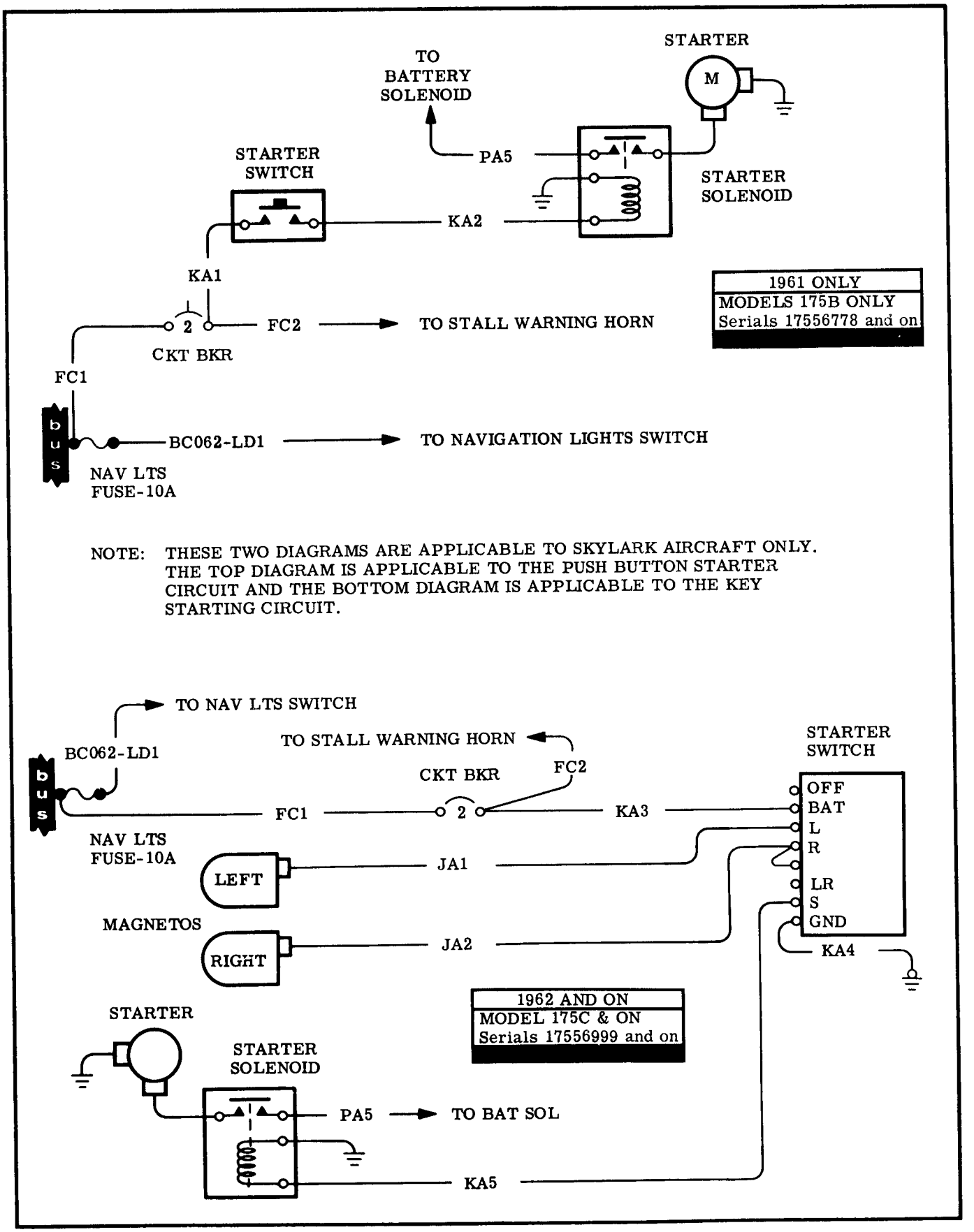

Figure 17-37. Push-Button and Key Starting Circuits - Model 175

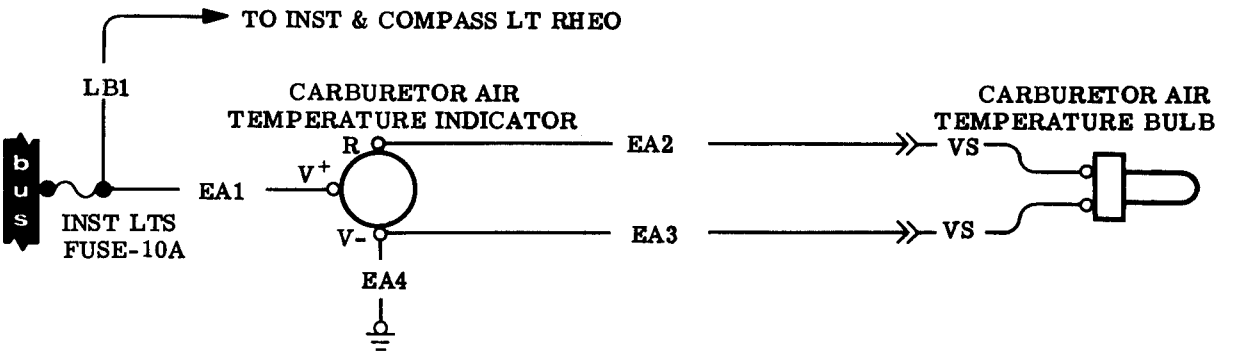

LATE 1959 THRU LATE 1961
MODELS 175A & B
Serials 56230 thru 17556967

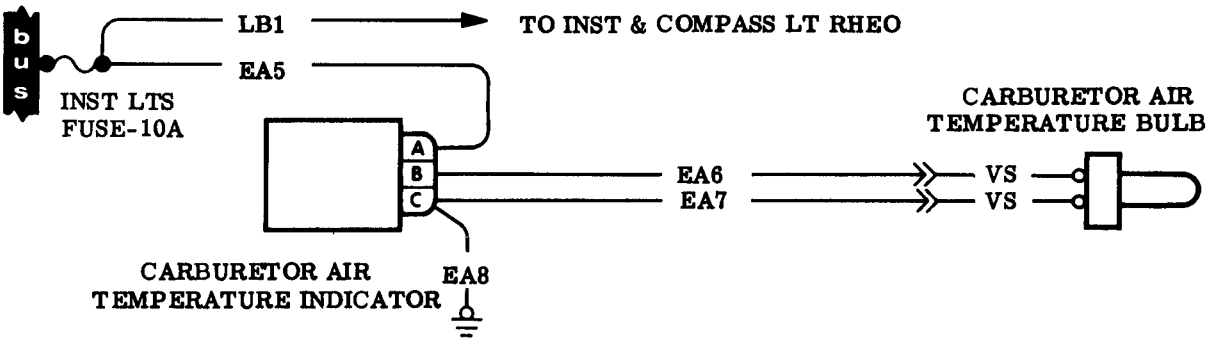

LATE 1961 AND ON
MODEL 175B AND ON
Serials 17556968 and on

Figure 17-38. Carburetor Air Temperature Circuits - Model 175

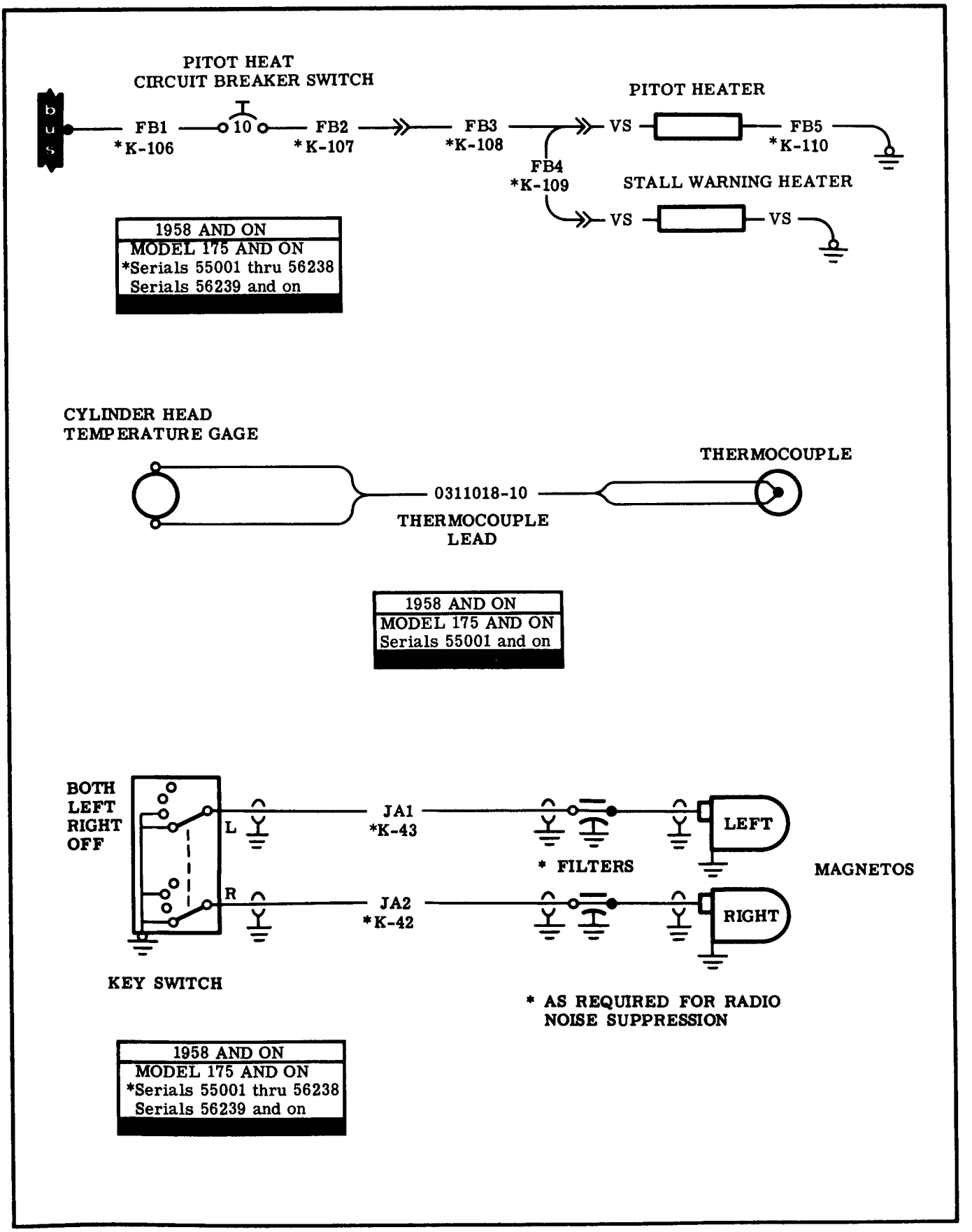

Figure 17-39. Mag., Cyl. Head Temp., Htd. Pitot and Stall Warning Ckts - Model 175

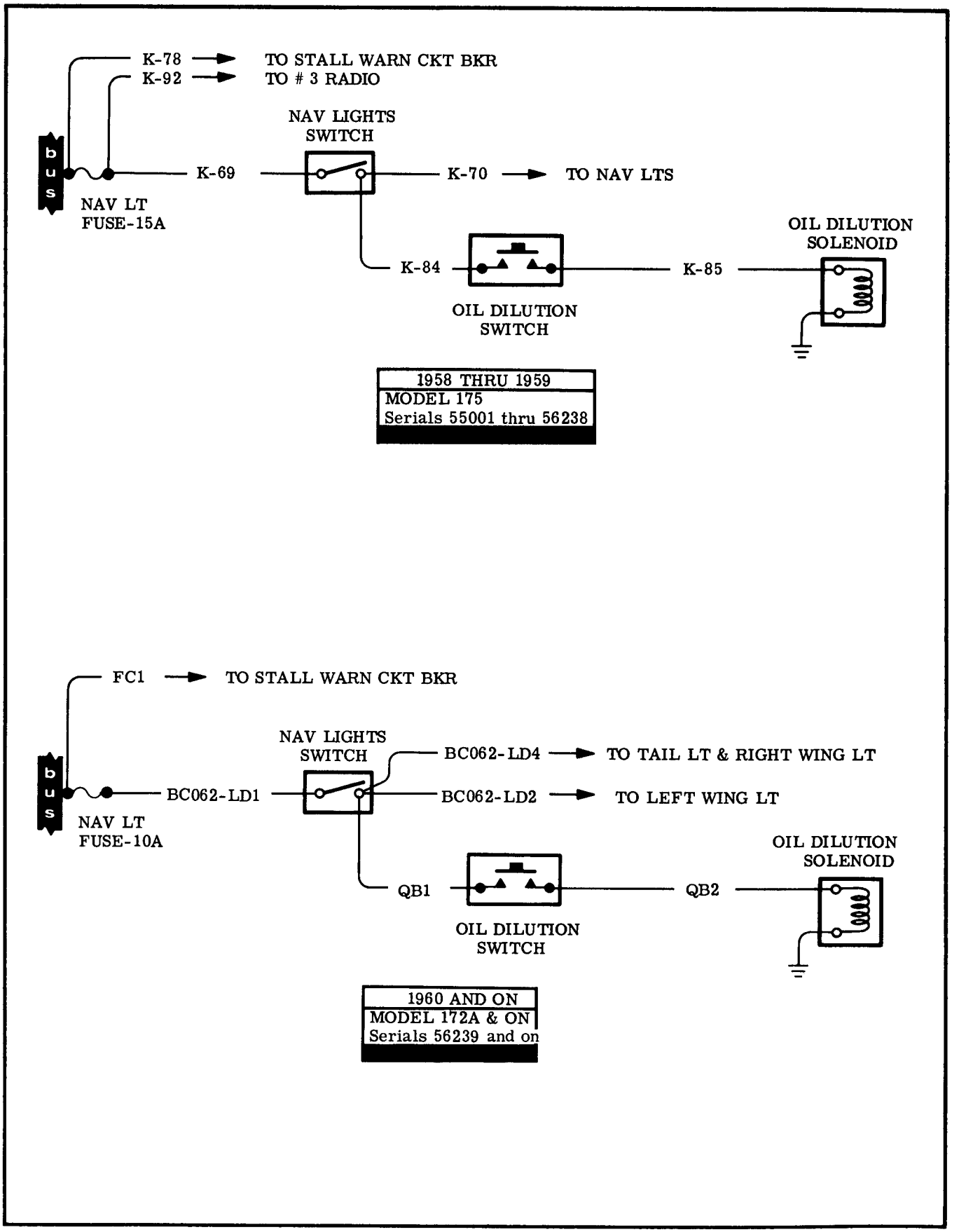

Figure 17-40. Oil Dilution Circuits - Model 175

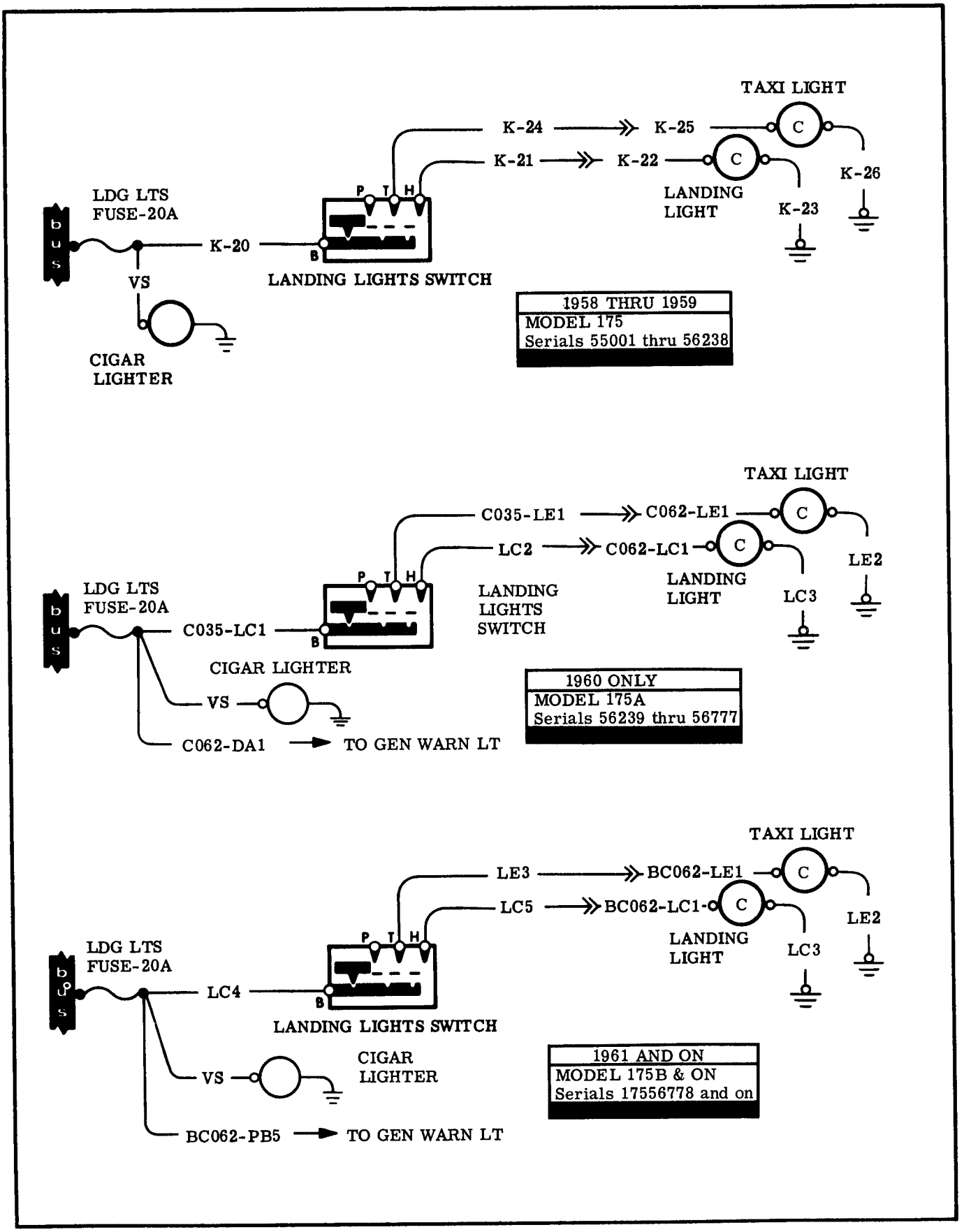

Figure 17-41. Cigar Lighter, Landing Light and Taxi Light Circuits - Model 175.

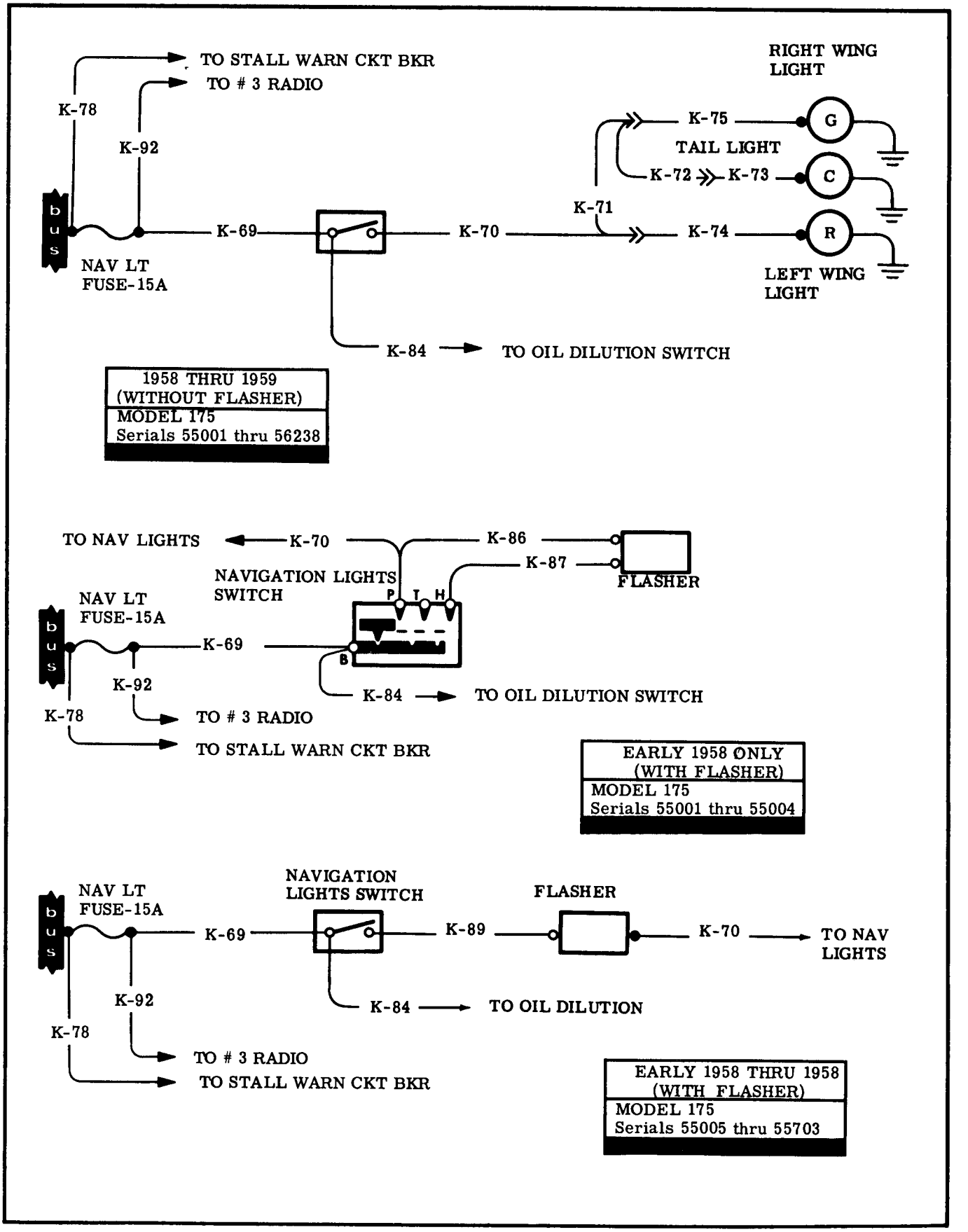

Figure 17-42. Navigation Lights Circuits - Model 175 (Sheet 1 of 3)

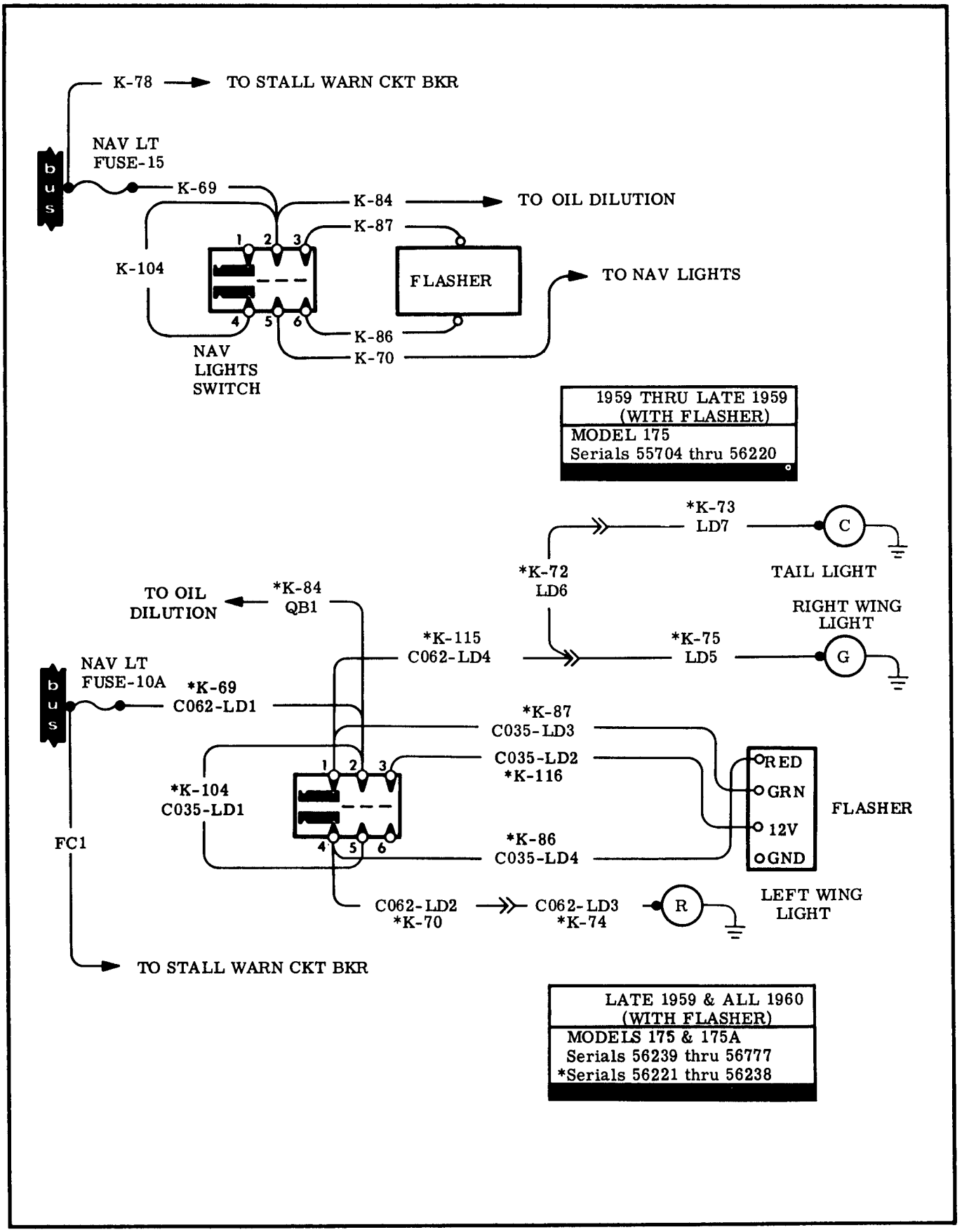

Figure 17-42. Navigation Lights Circuits - Model 175 (Sheet 2 of 3)

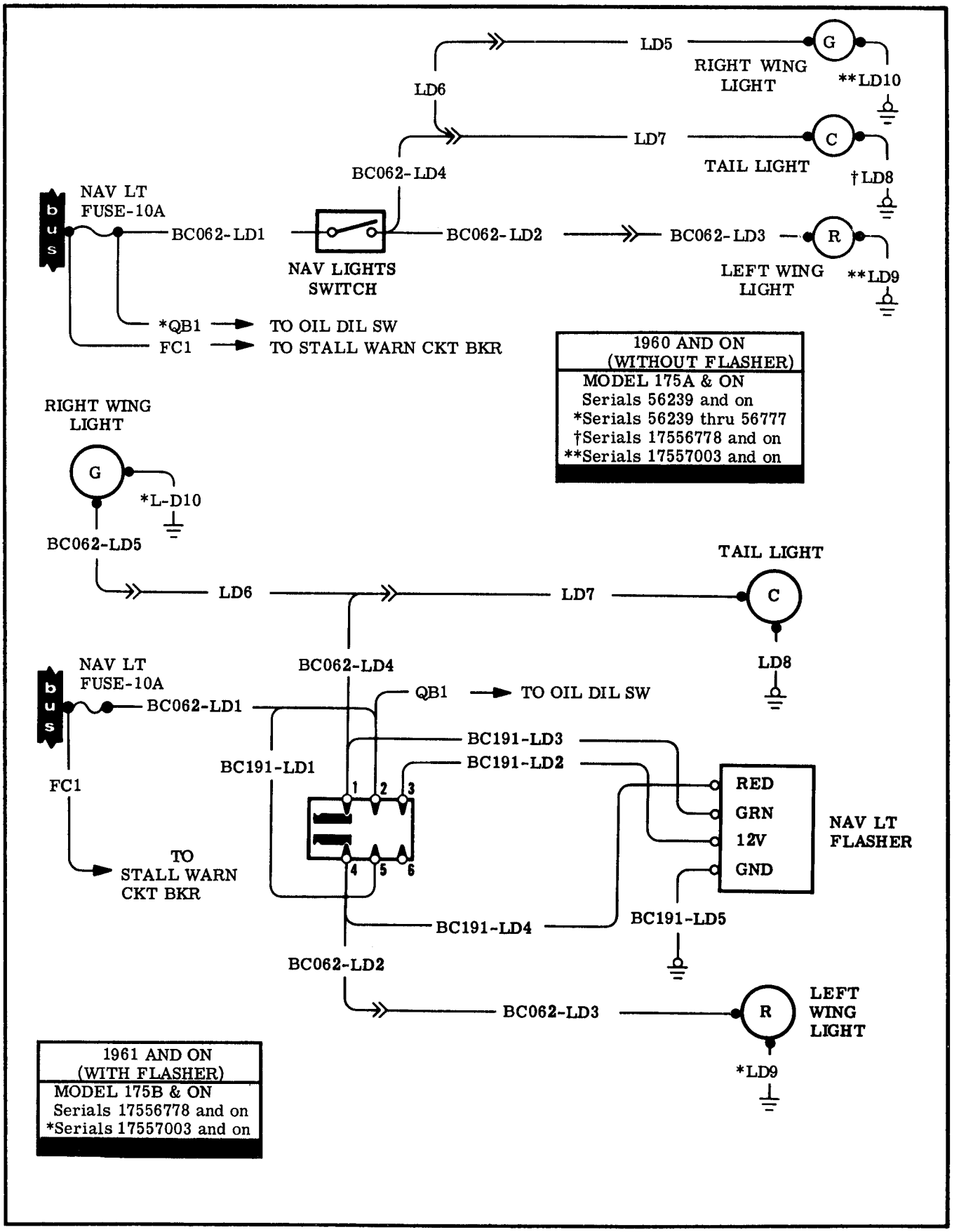

Figure 17-42. Navigation Lights Circuits - Model 175 (Sheet 3 of 3)

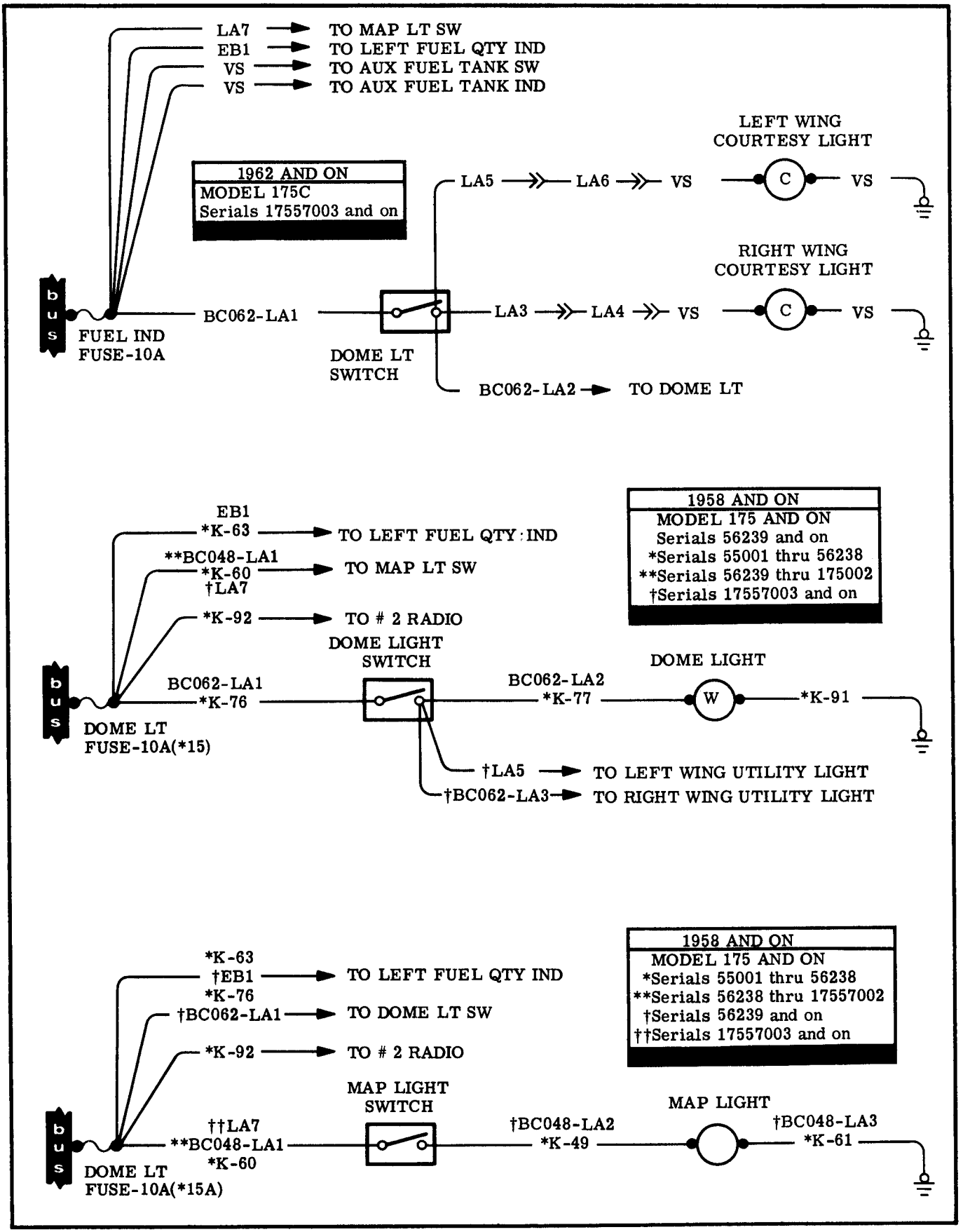

Figure 17-43. Courtesy Lights, Dome Light and Map Light Circuits - Model 175

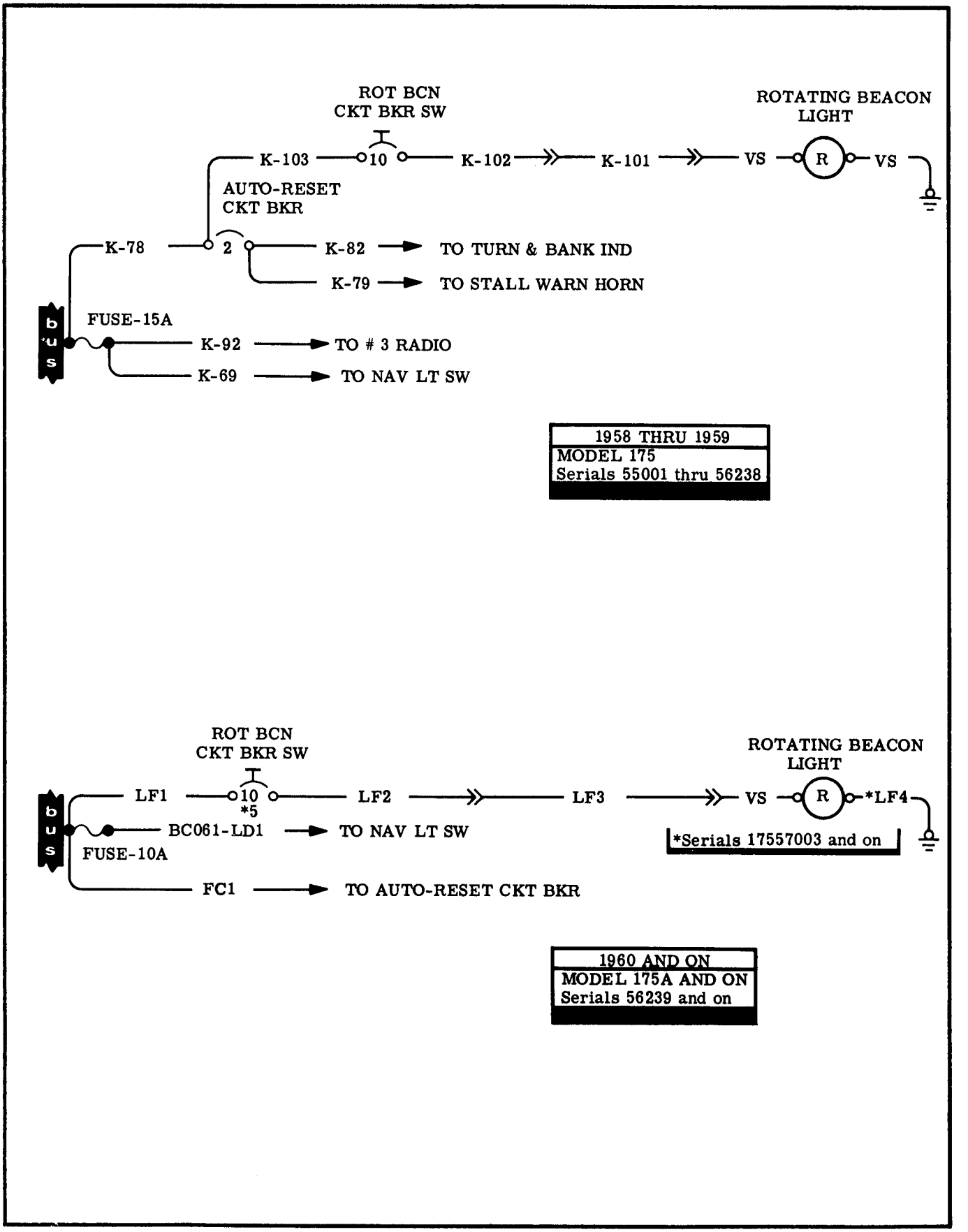

Figure 17-44. Rotating Beacon Circuits - Model 175

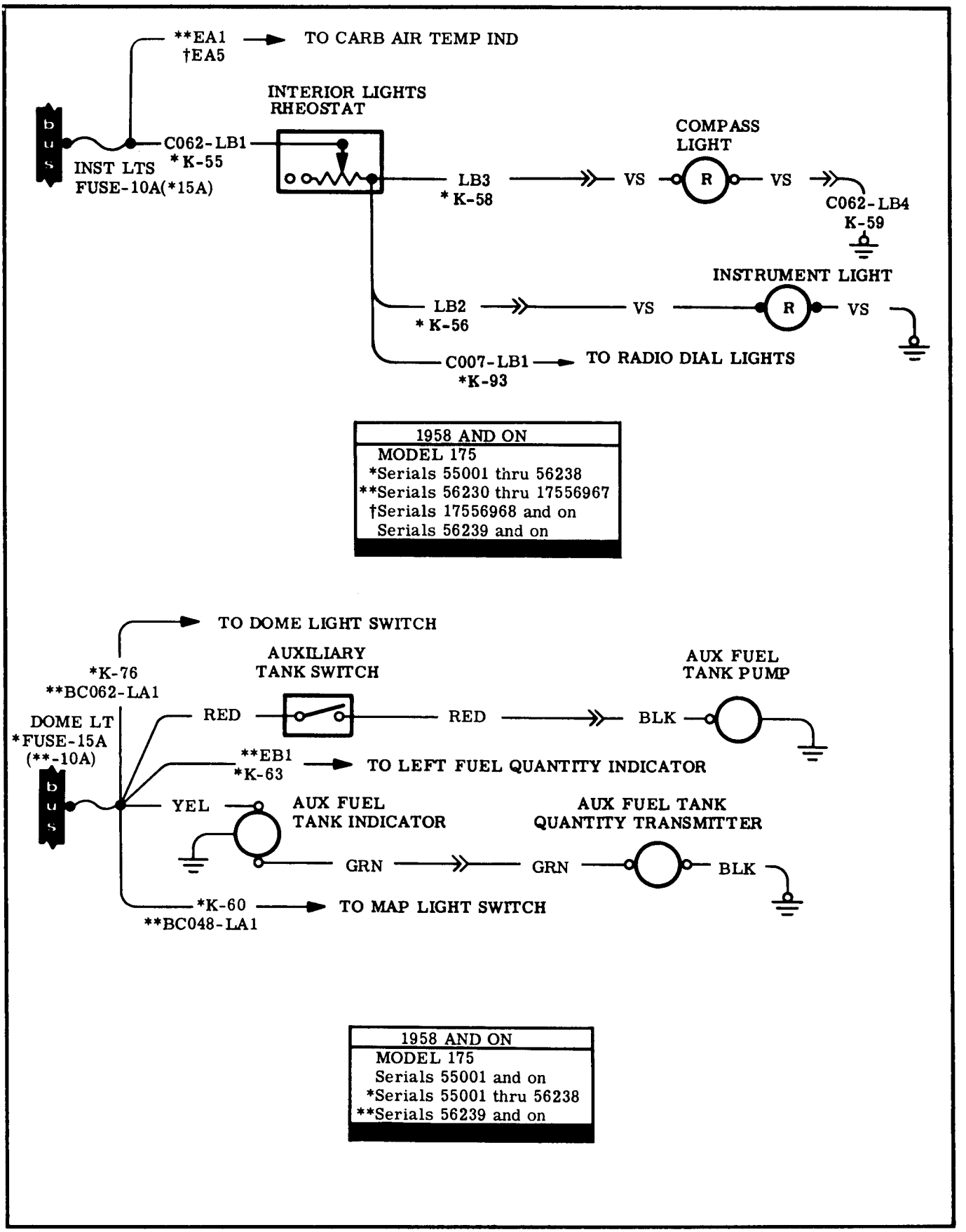

Figure 17-45. Compass Light, Instrument Light and Auxiliary Fuel Tank Circuits - Model 175

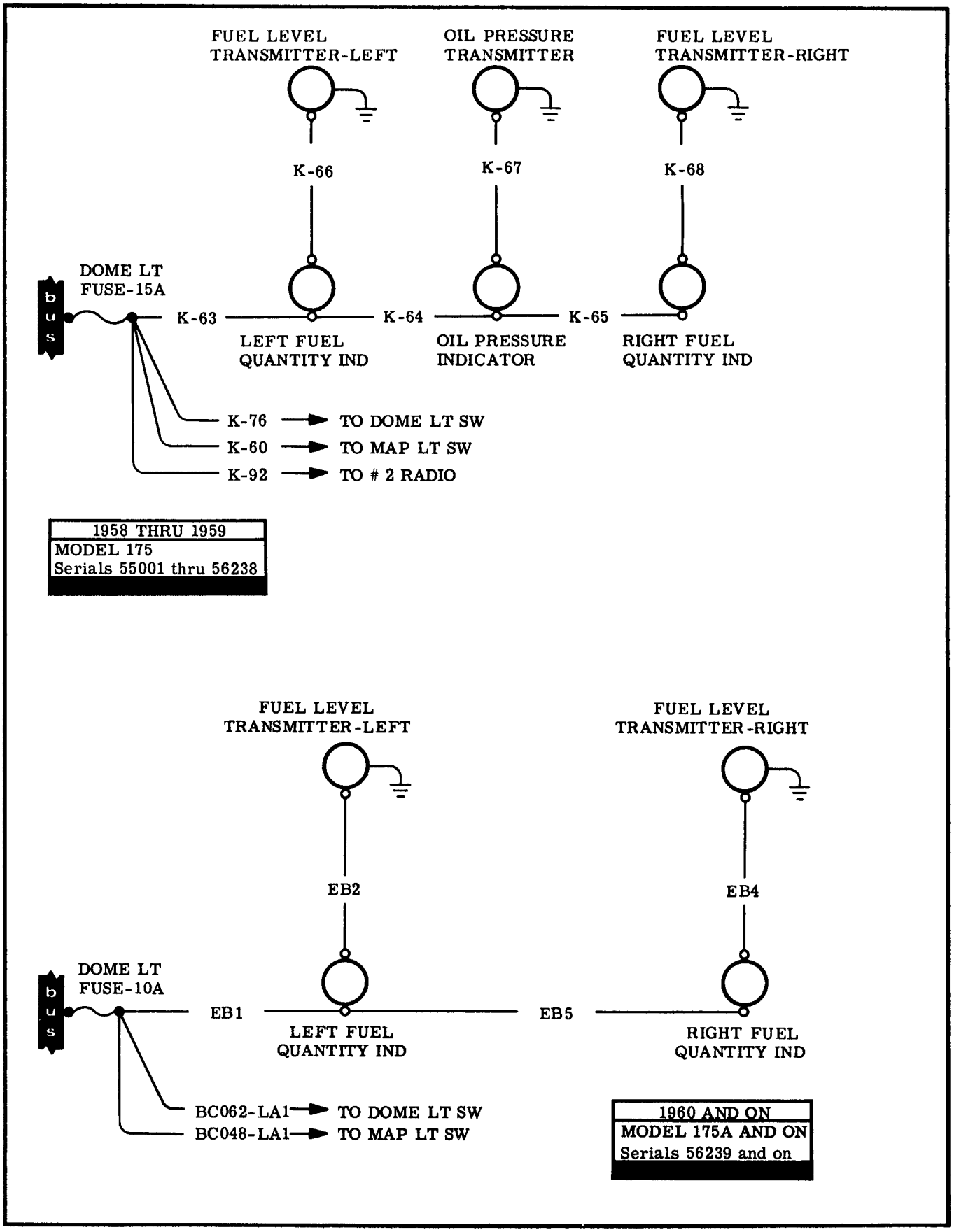

Figure 17-46. Fuel Quantity and Oil Pressure Indicator Circuits - Model 175

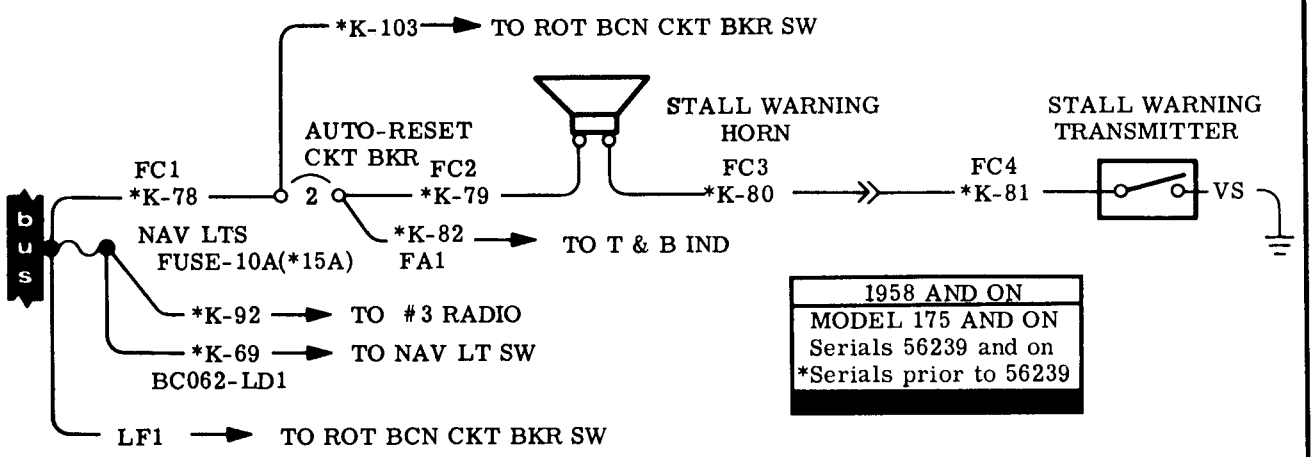

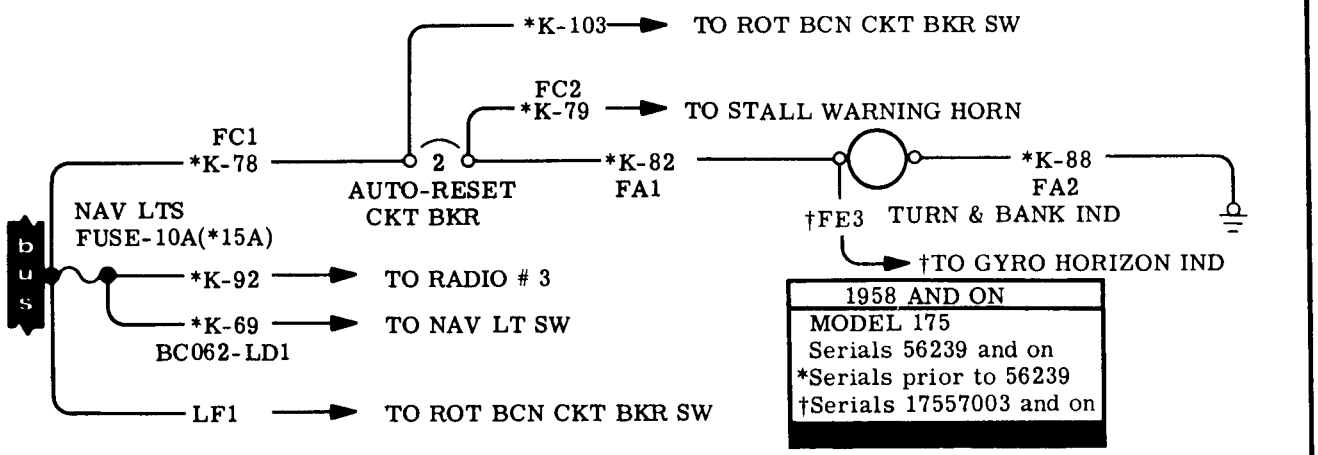

Figure 17-47. Stall Warning and Turn and Bank Circuits - Model 175

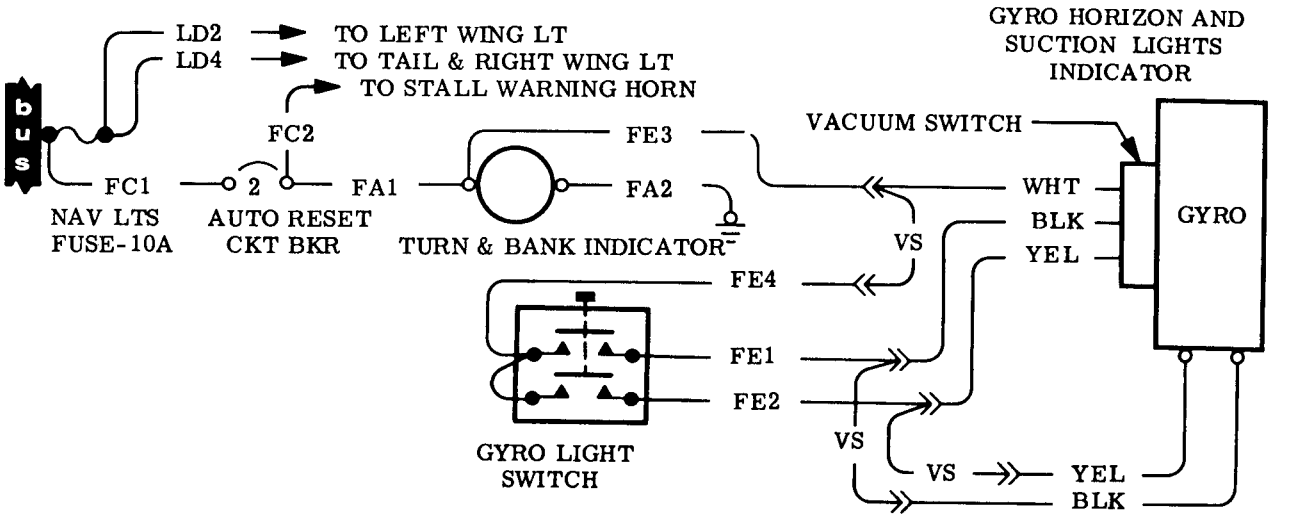

1962 AND ON
MODEL 175C & ON
Serials 17557003 and on

Figure 17-48. Gyro Horizon Indicator Circuits - Model 175

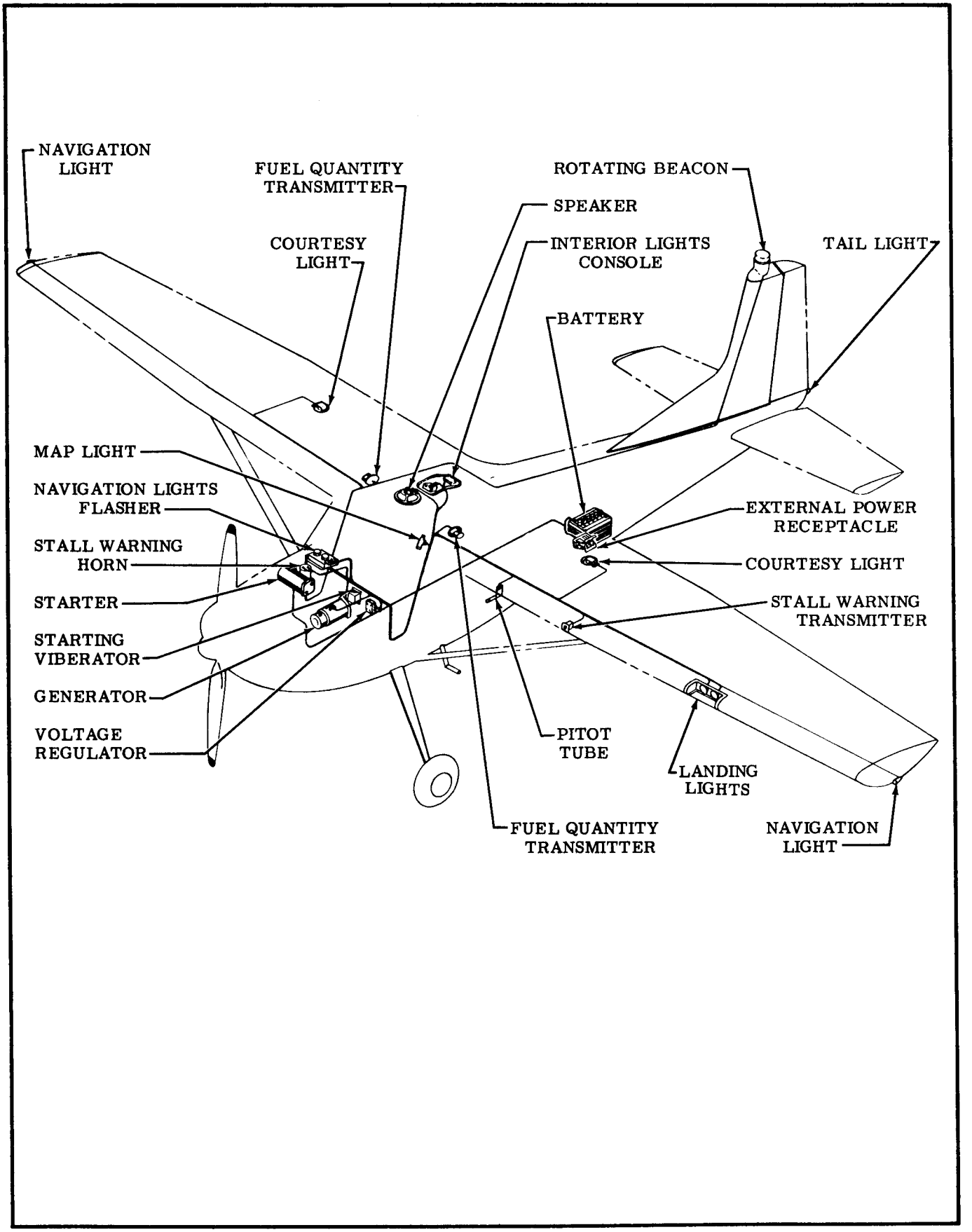

Figure 17-49. Electrical Equipment Installation - Model 180

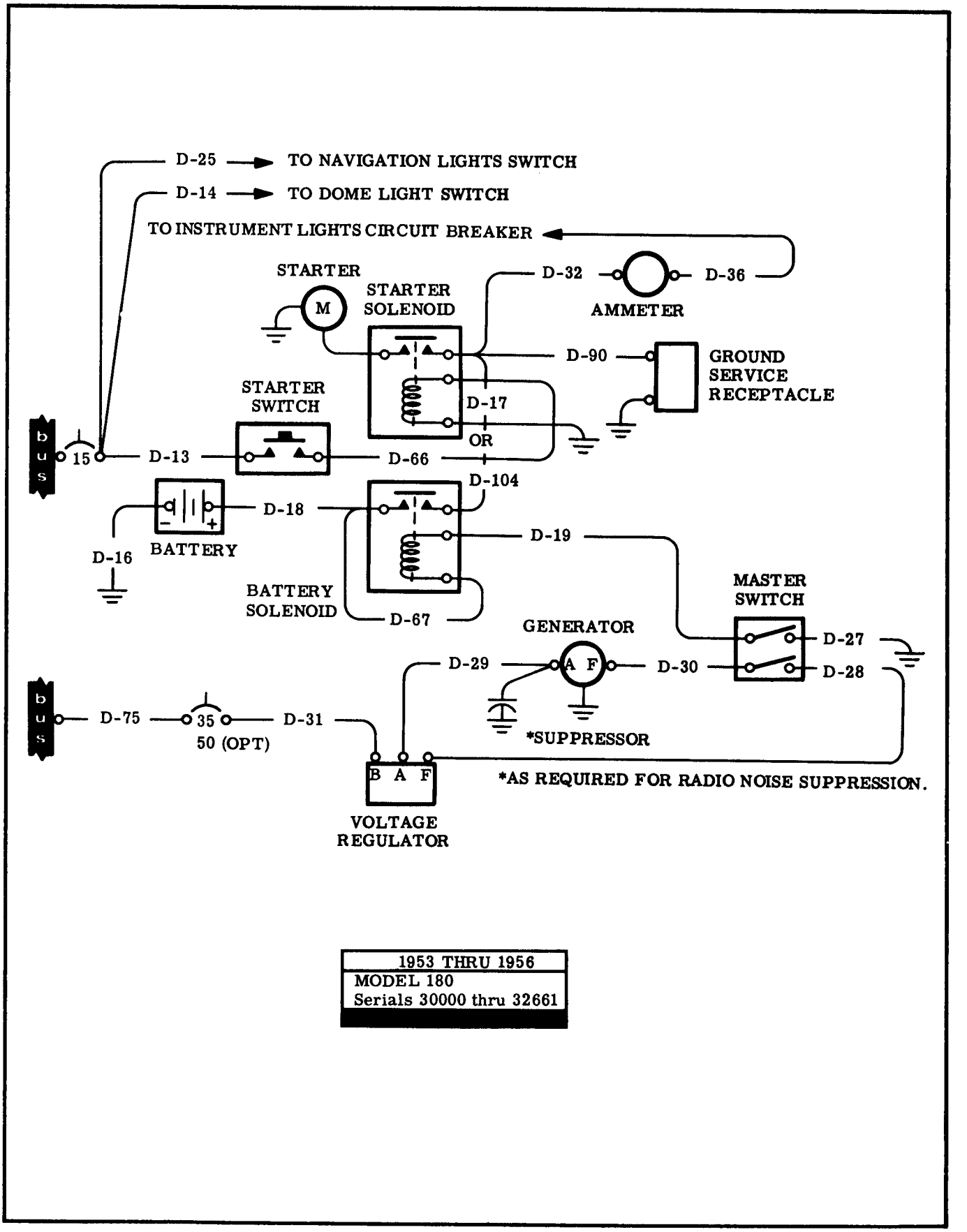

1953 THRU 1956
MODEL 180
Serials 30000 thru 32661

Figure 17-50. Bat., Gnd. Ser. Recpt., Gen., Str., Vol. Reg., Mag. and Clock Ckts. - Model 180 (Sheet 1 of 6)

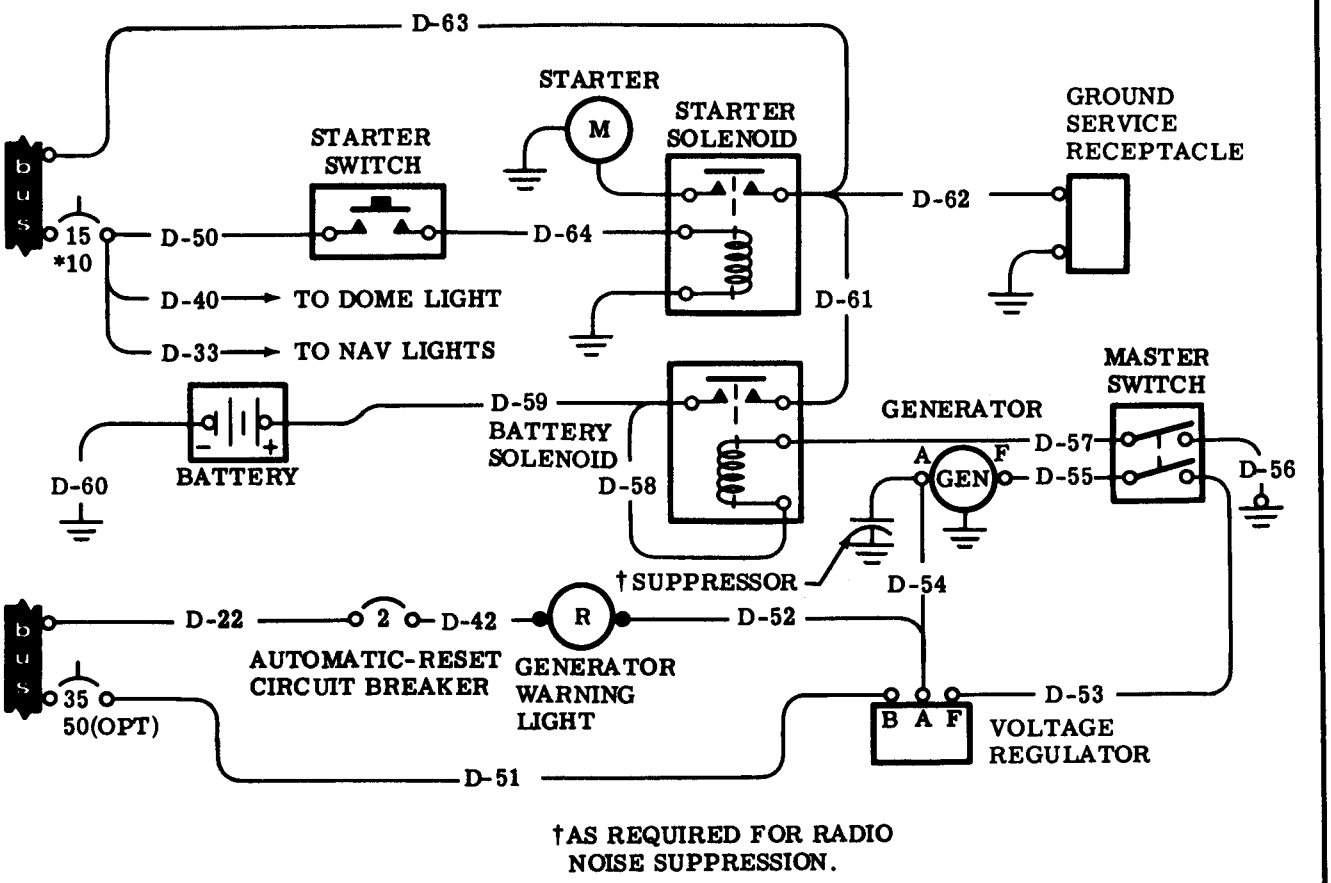

†AS REQUIRED FOR RADIO NOISE SUPPRESSION.

1957 THRU 1958
MODELS 180 AND 180A
Serials 32662 thru 50355
*Serials 50263 thru 50355

Figure 17-50. Bat., Gnd. Ser. Recpt., Gen., Str., Vol. Reg., Mag. and Clock Ckts. - Model 180 (Sheet 2 of 6)

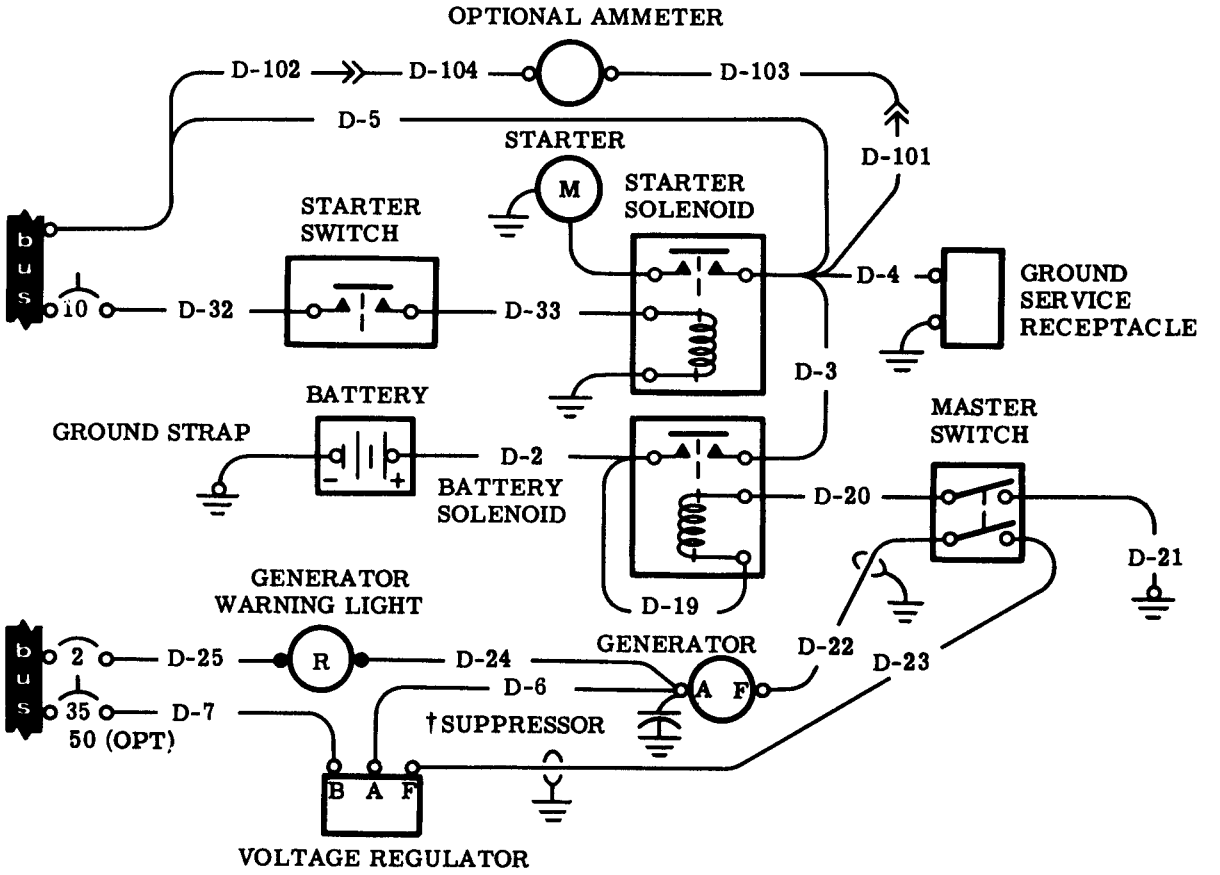

NOTES: 1. WHEN AMMETER IS INSTALLED, WIRE D-5 IS NOT USED.
2. †AS REQUIRED FOR RADIO NOISE SUPPRESSION.

1959 ONLY
MODEL 180B
Serials 50356 thru 50661

Figure 17-50. Bat., Gnd. Ser. Recpt., Gen., Str., Vol. Reg., Mag. and Clock Ckts. - Model 180 (Sheet 3 of 6)

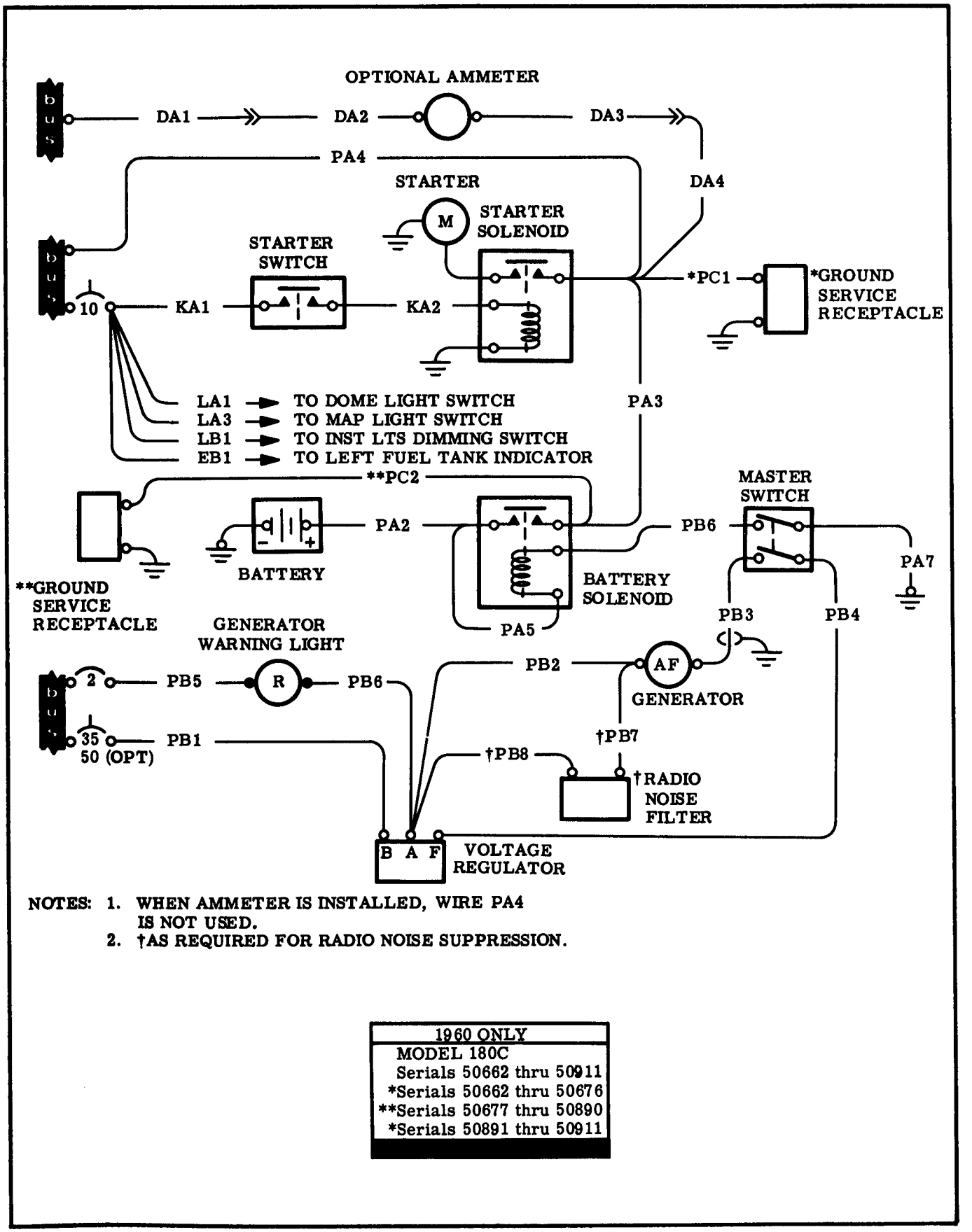

Figure 17-50. Bat., Gnd. Ser. Recpt., Gen., Str., Vol. Reg., Mag. and Clock Ckts. - Modle 180 (Sheet 4 of 6)

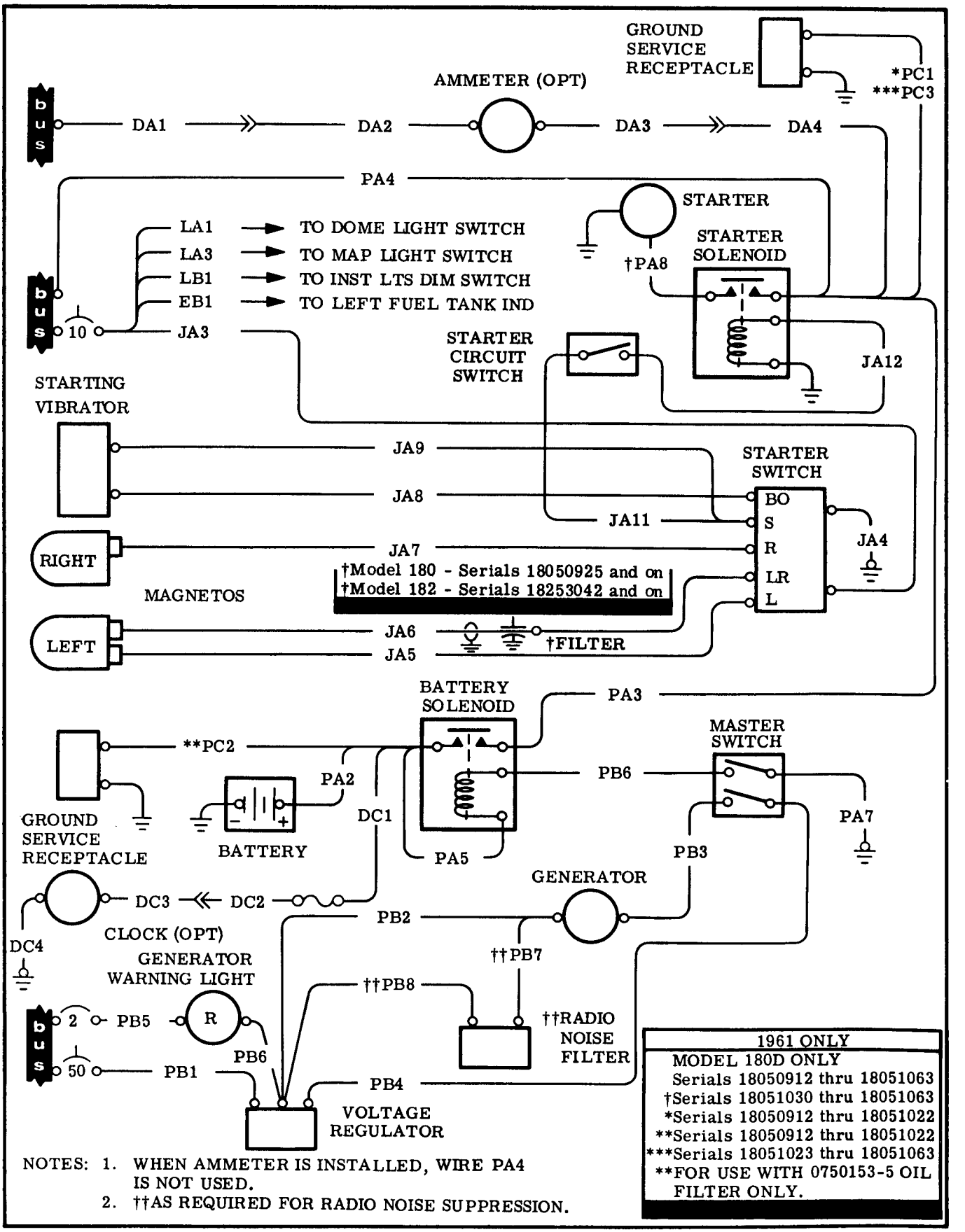

Figure 17-50. Bat., Gnd. Ser. Recpt., Gen., Str., Vol. Reg., Mag. and Clock Ckts. - Model 180 (Sheet 5 of 6)

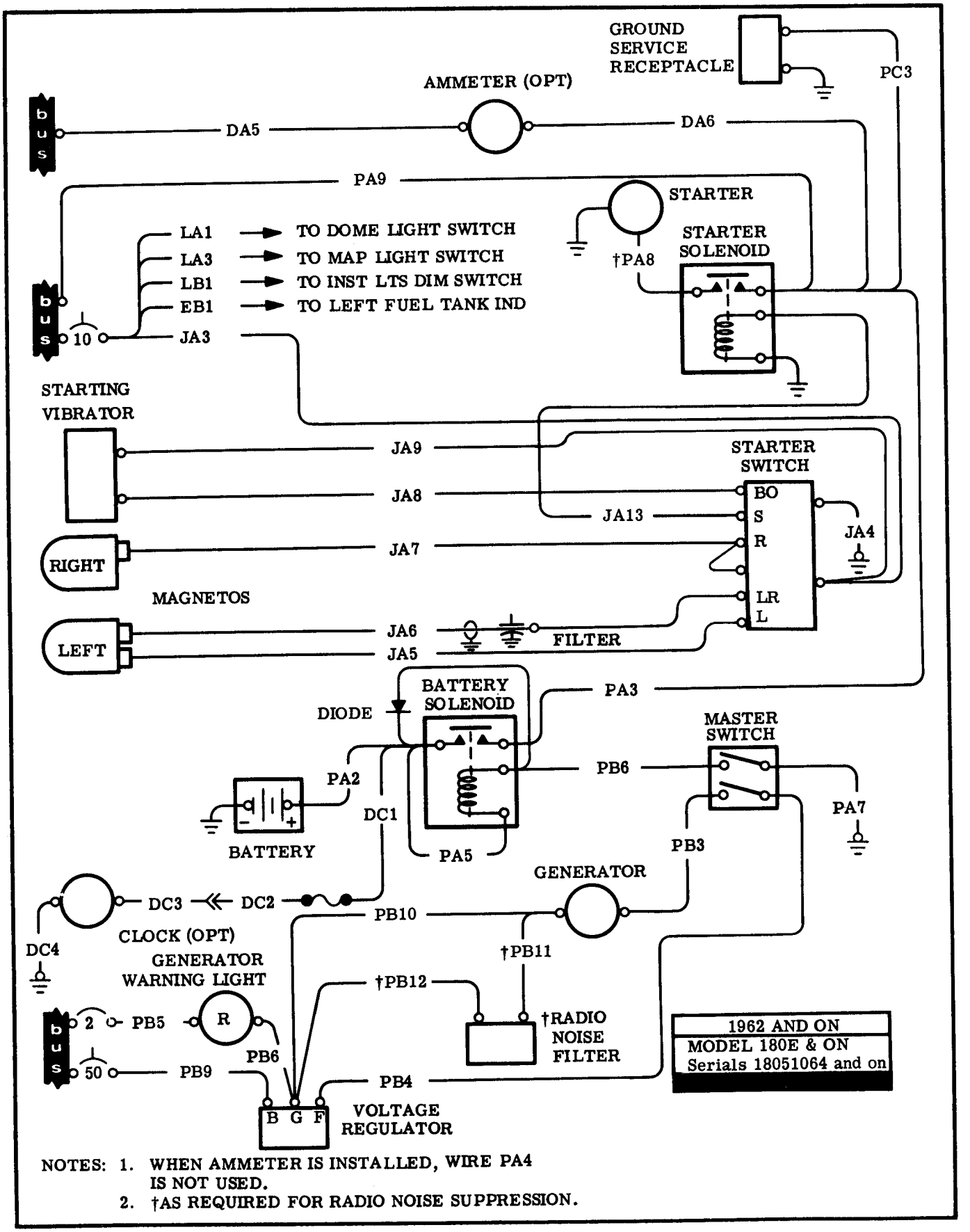

NOTES: 1. WHEN AMMETER IS INSTALLED, WIRE PA4 IS NOT USED.
2. †AS REQUIRED FOR RADIO NOISE SUPPRESSION.

Figure 17-50. Bat., Gnd. Ser. Recpt., Gen., Str., Vol. Reg., Mag. and Clock Ckts. - Model 180 (Sheet 6 of 6)

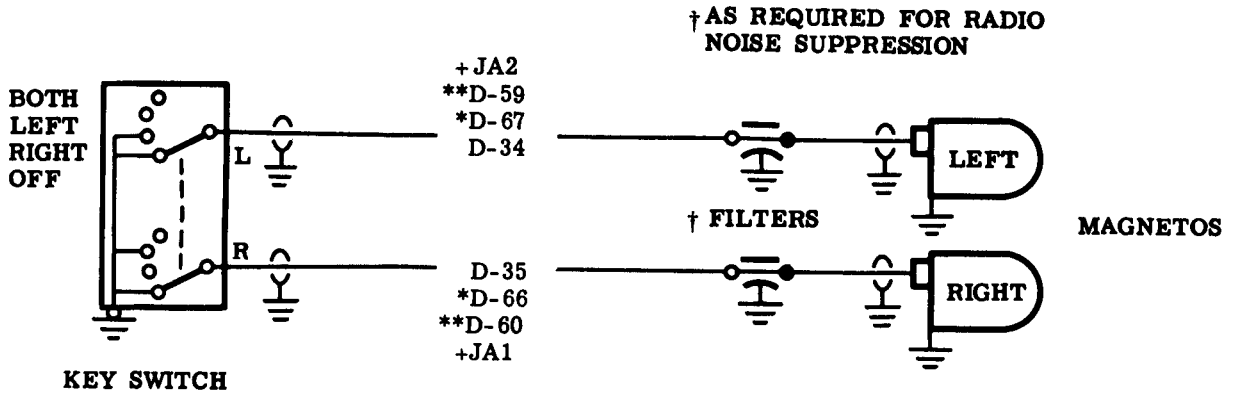

1953 THRU 1960
MODELS 180, 180A, 180B AND 180C.
Serials 30000 thru 32661
*Serials 32661 thru 50355
**Serials 50356 thru 50661
+Serials 50662 thru 50911

NOTE: SEE FIGURE 17-50 FOR 1961 AND ON, MAGNETO CIRCUITS.

Figure 17-51. Magneto Circuits - Model 180

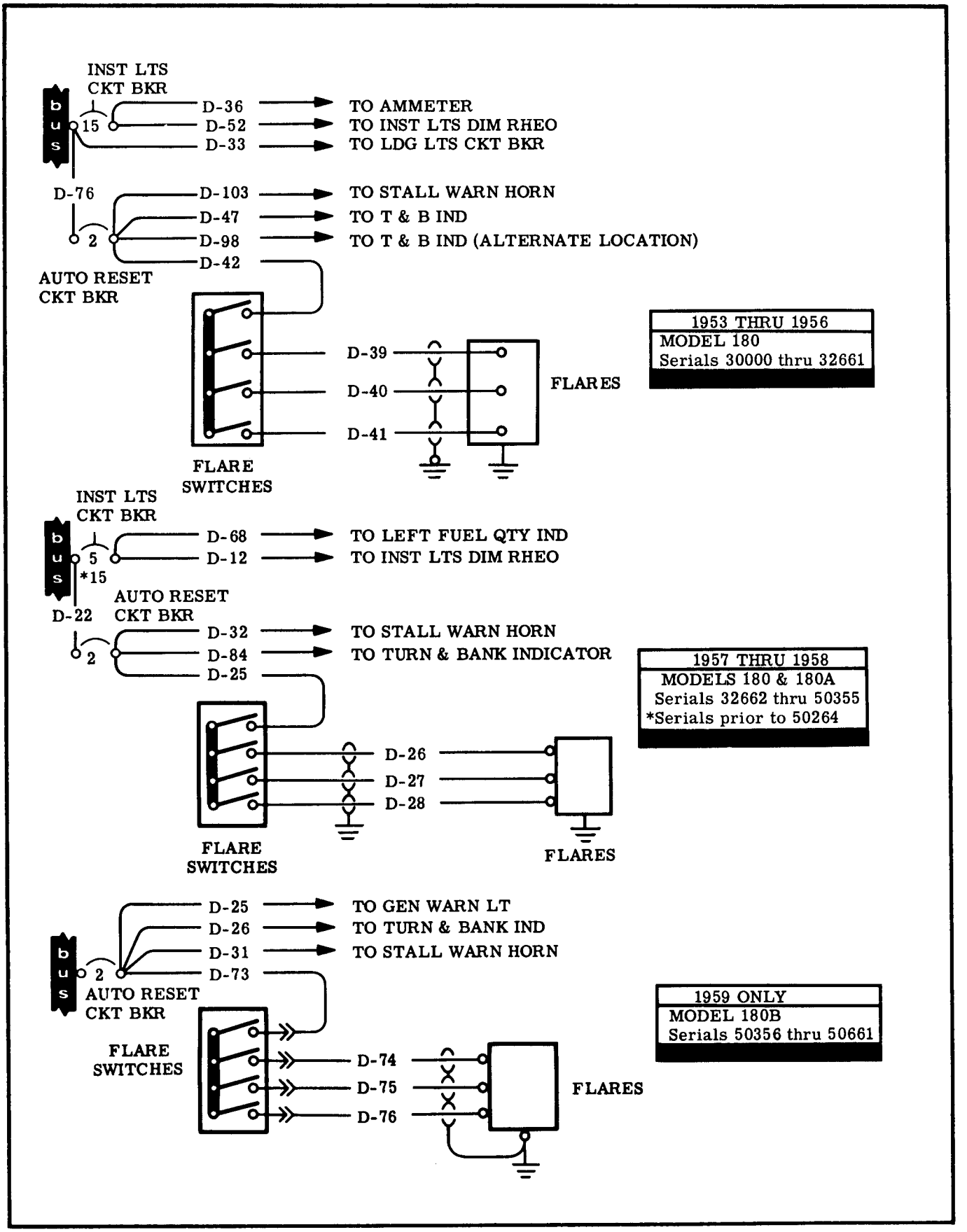

Figure 17-52. Flare Circuits - Model 180

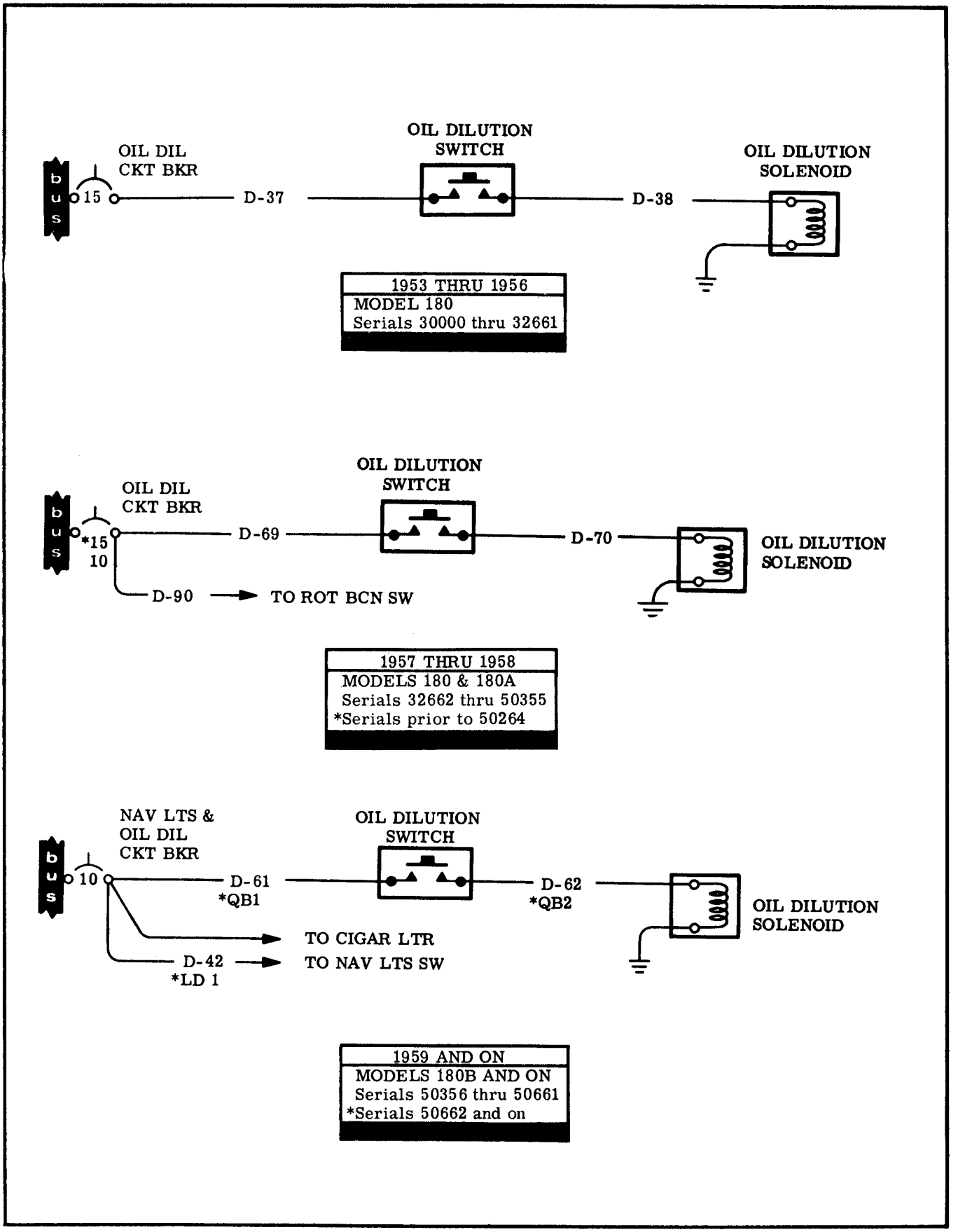

Figure 17-53. Oil Dilution Circuits - Model 180

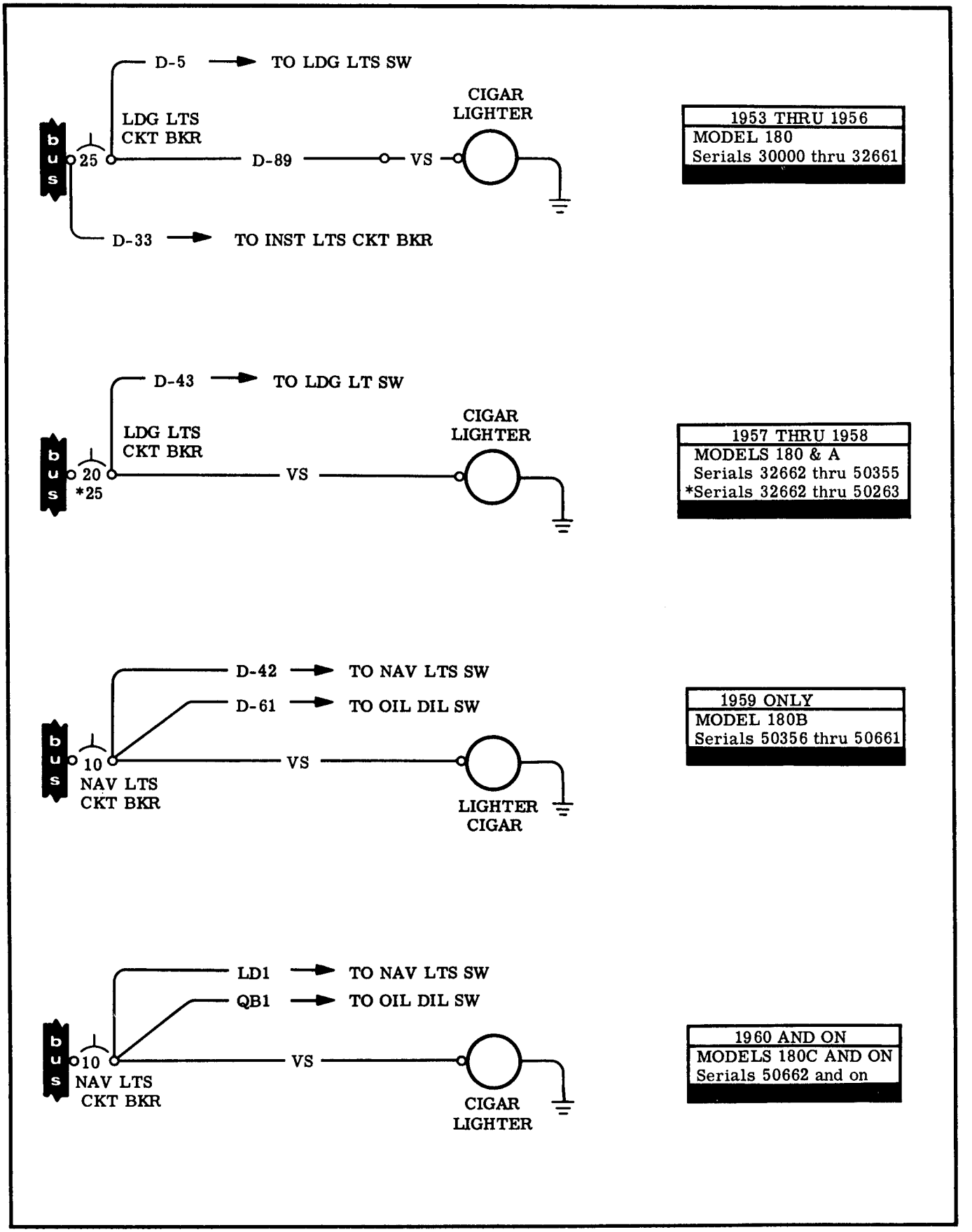

Figure 17-54. Cigar Lighter Circuits - Model 180

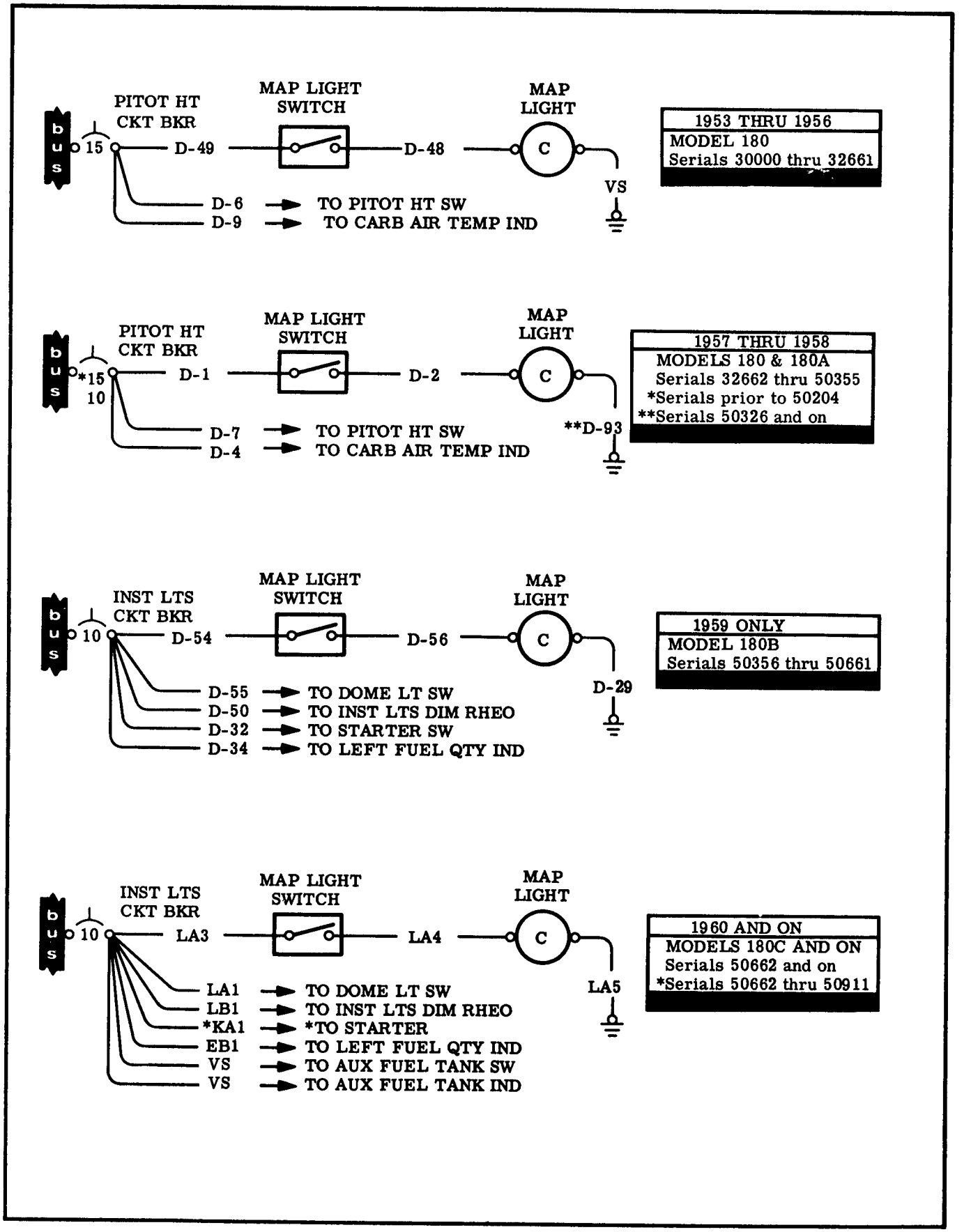

Figure 17-55. Map Light Circuits - Model 180

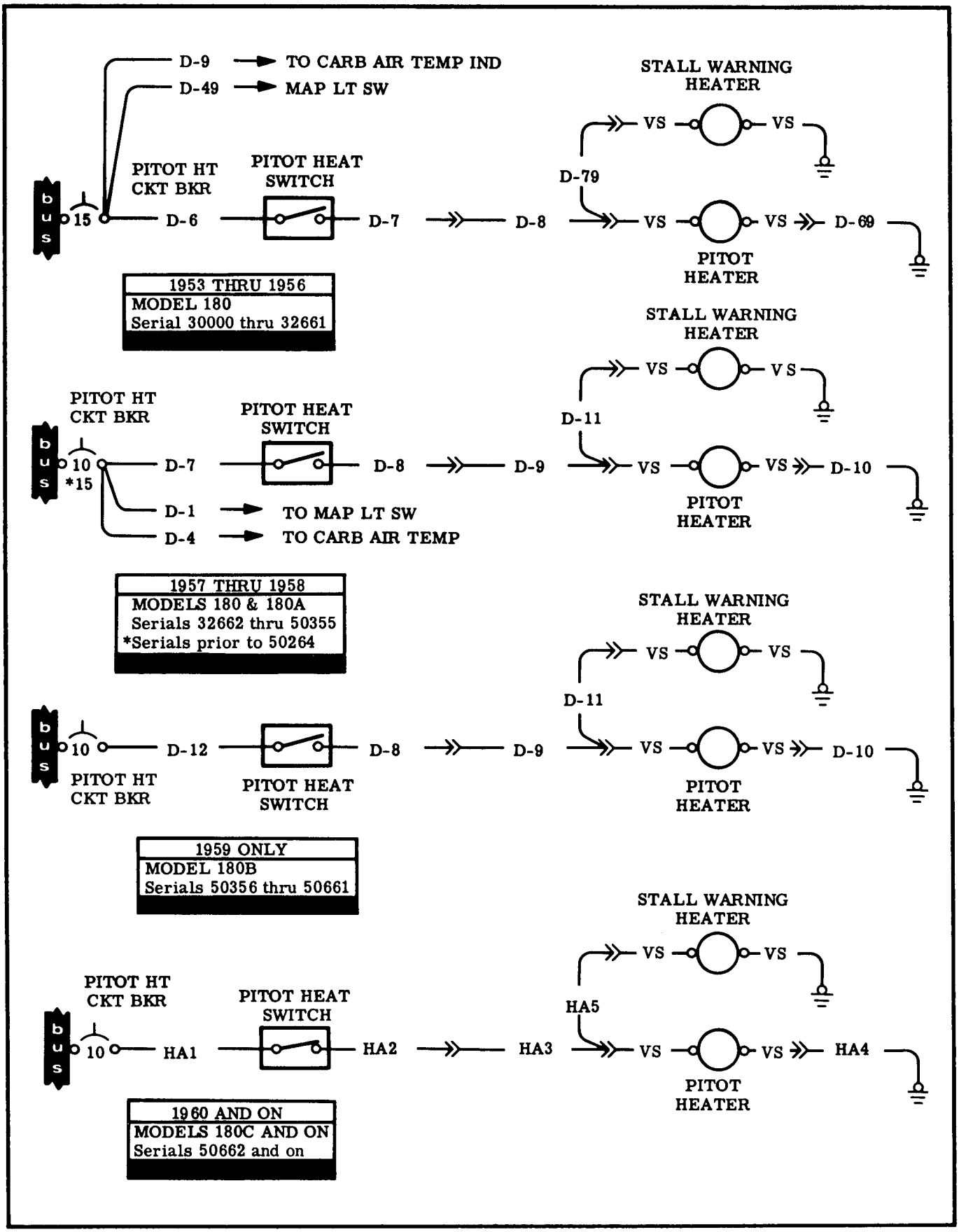

Figure 17-56. Stall Warning Heater and Pitot Heater Circuits - Model 180

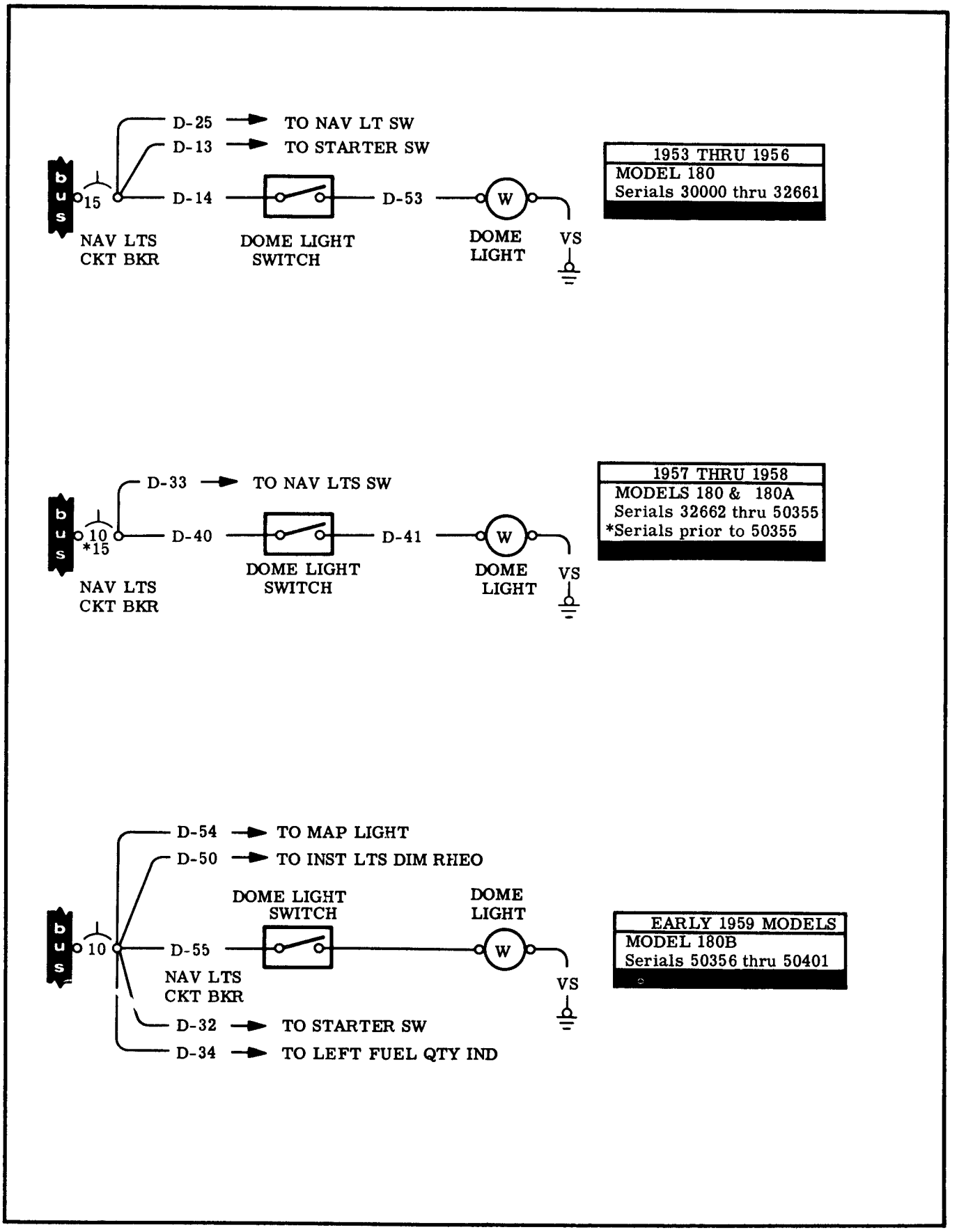

Figure 17-57. Dome Light Circuits - Model 180 (Sheet 1 of 2)

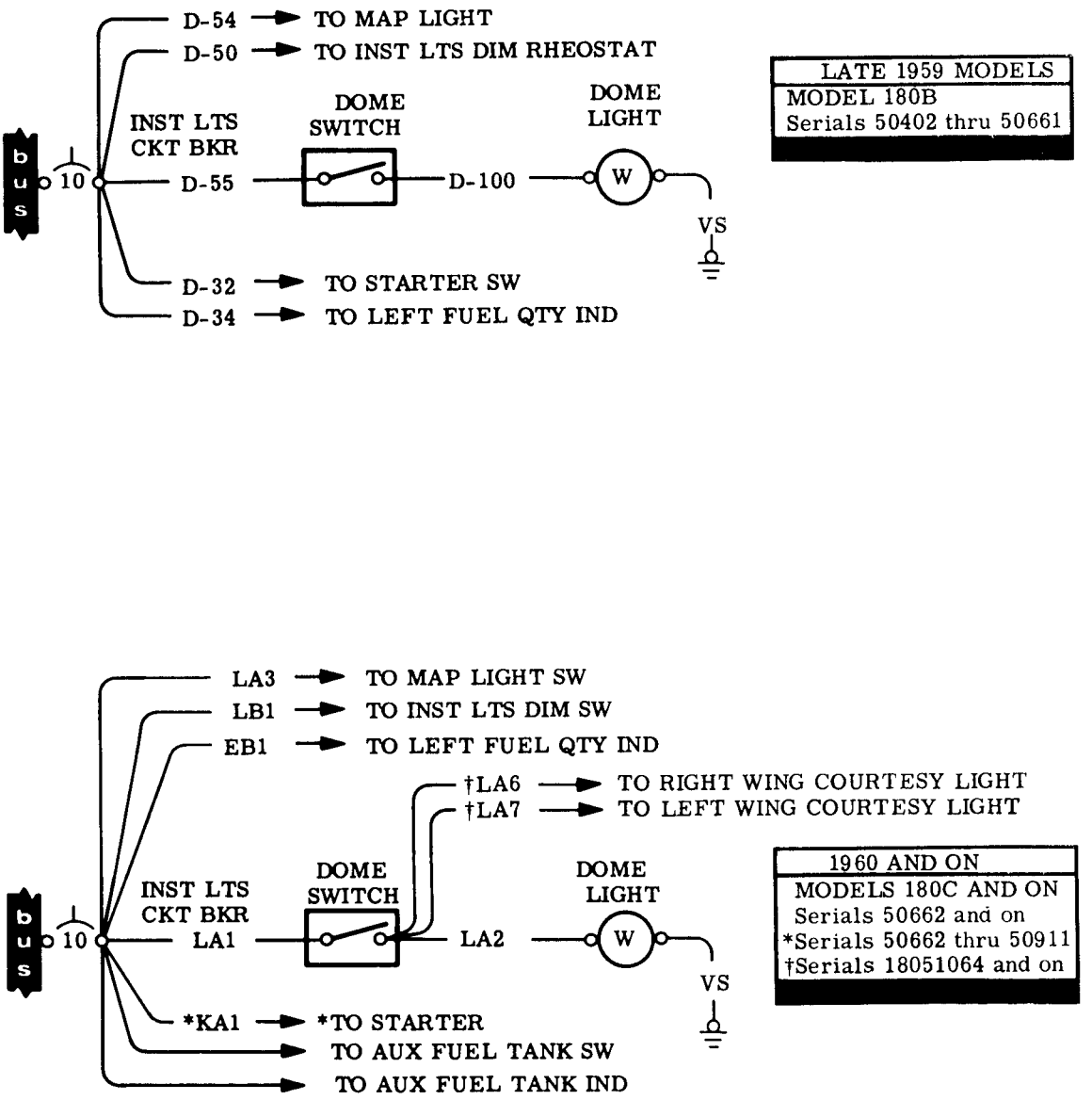

Figure 17-57. Dome Light Circuits - Model 180 (Sheet 2 of 2)

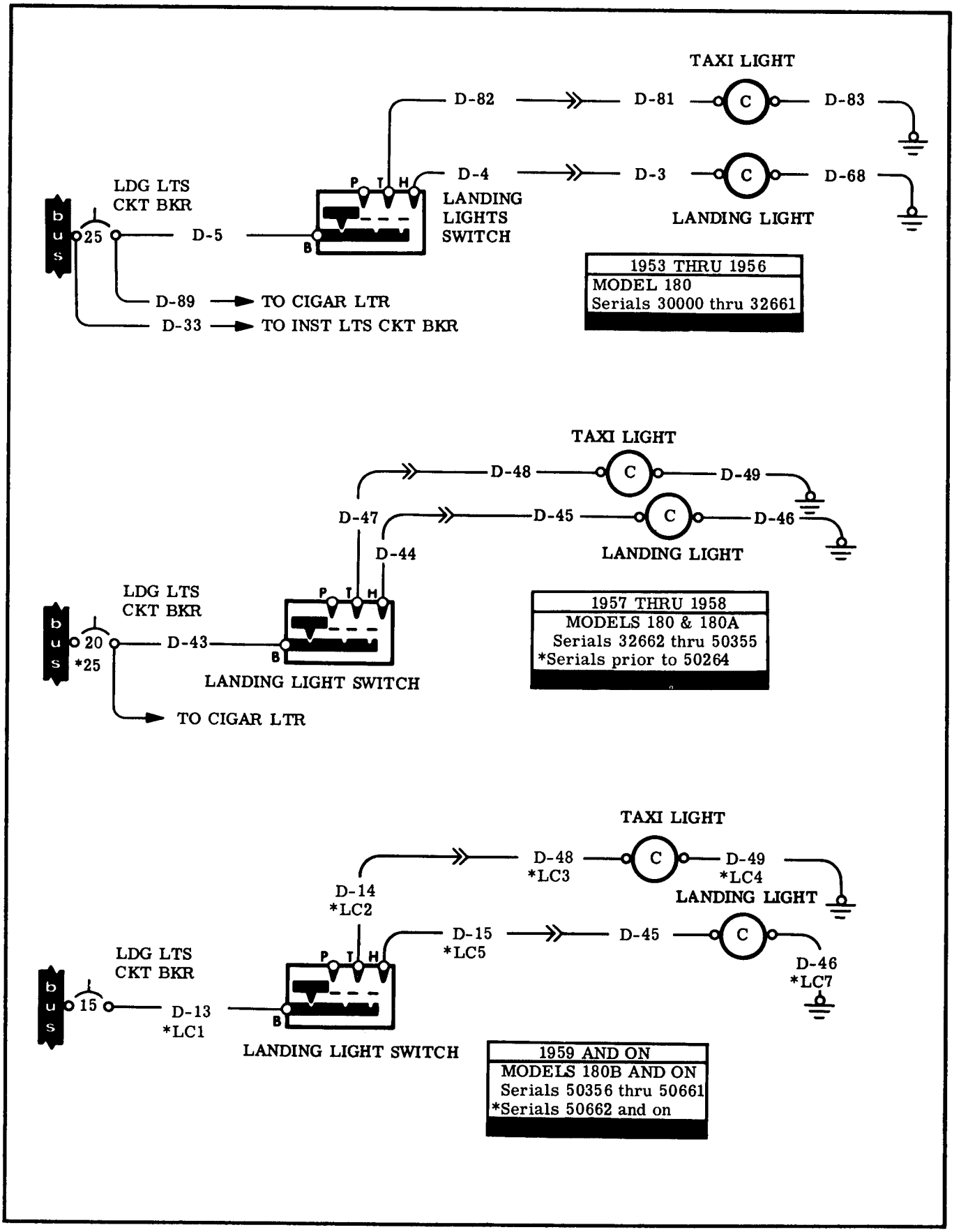

Figure 17-58. Landing and Taxi Light Circuits - Model 180

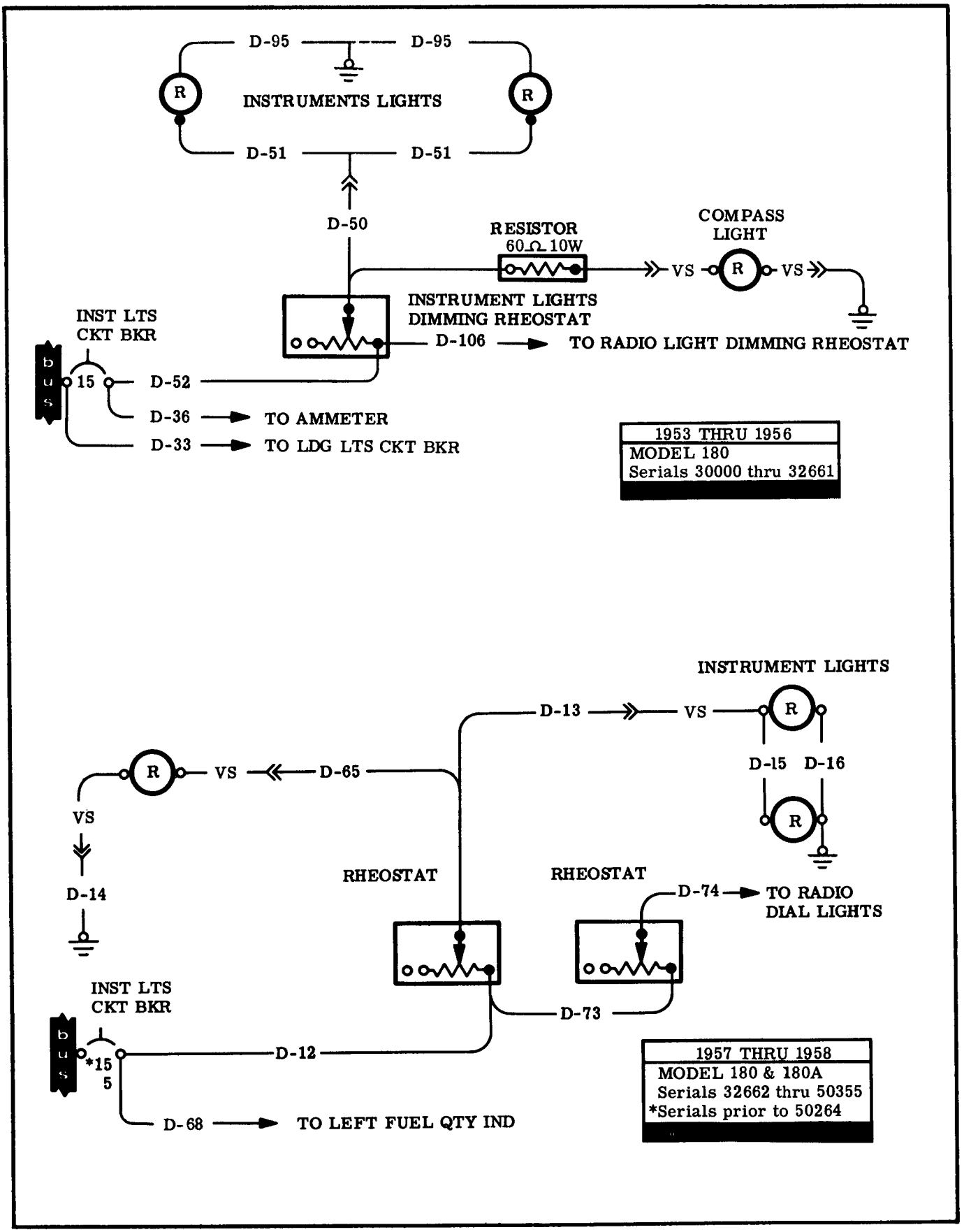

Figure 17-59. Instruments and Compass Lights Circuits - Model 180 (Sheet 1 of 2)

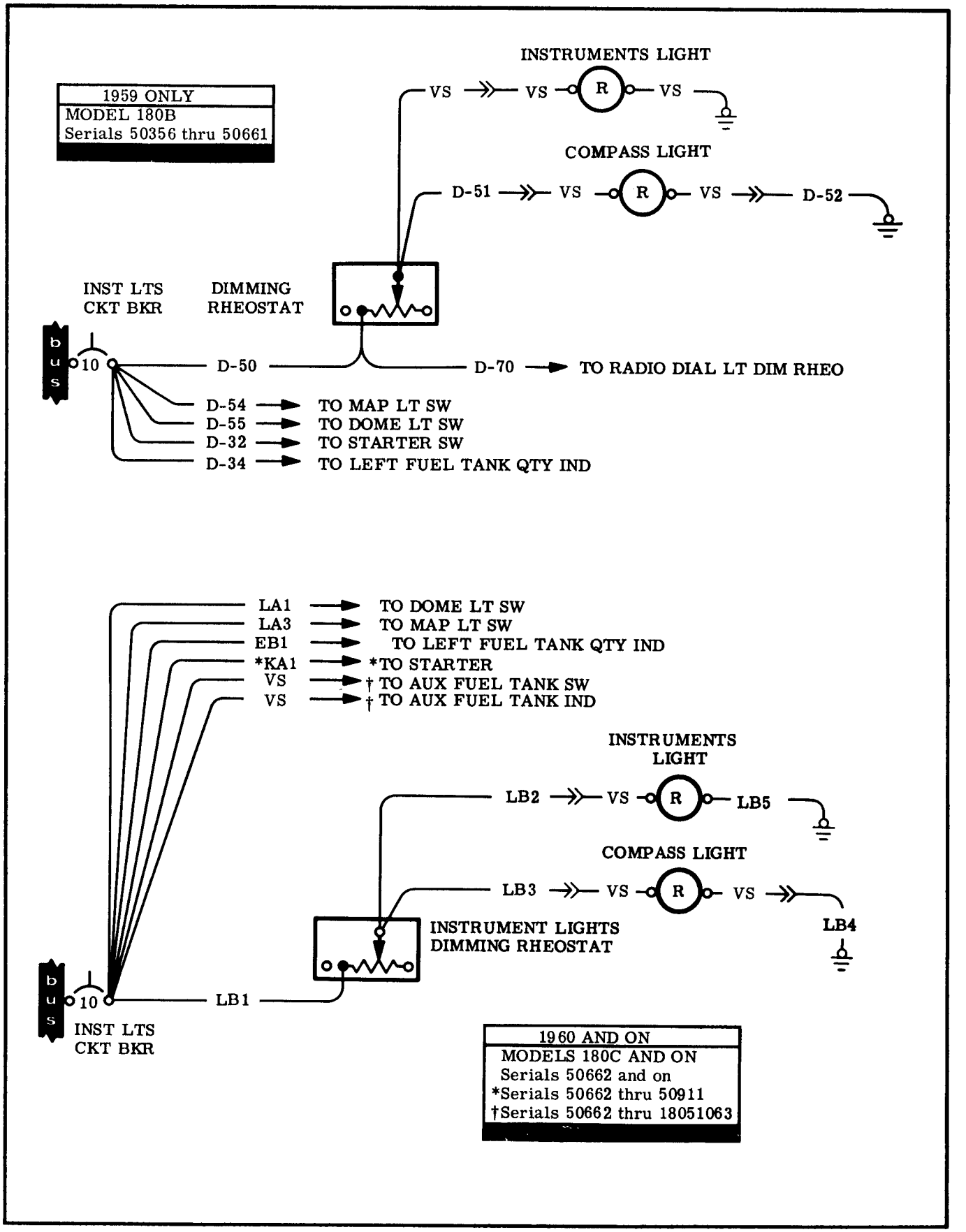

Figure 17-59. Instruments and Compass Lights Circuits - Model 180 (Sheet 2 of 2)

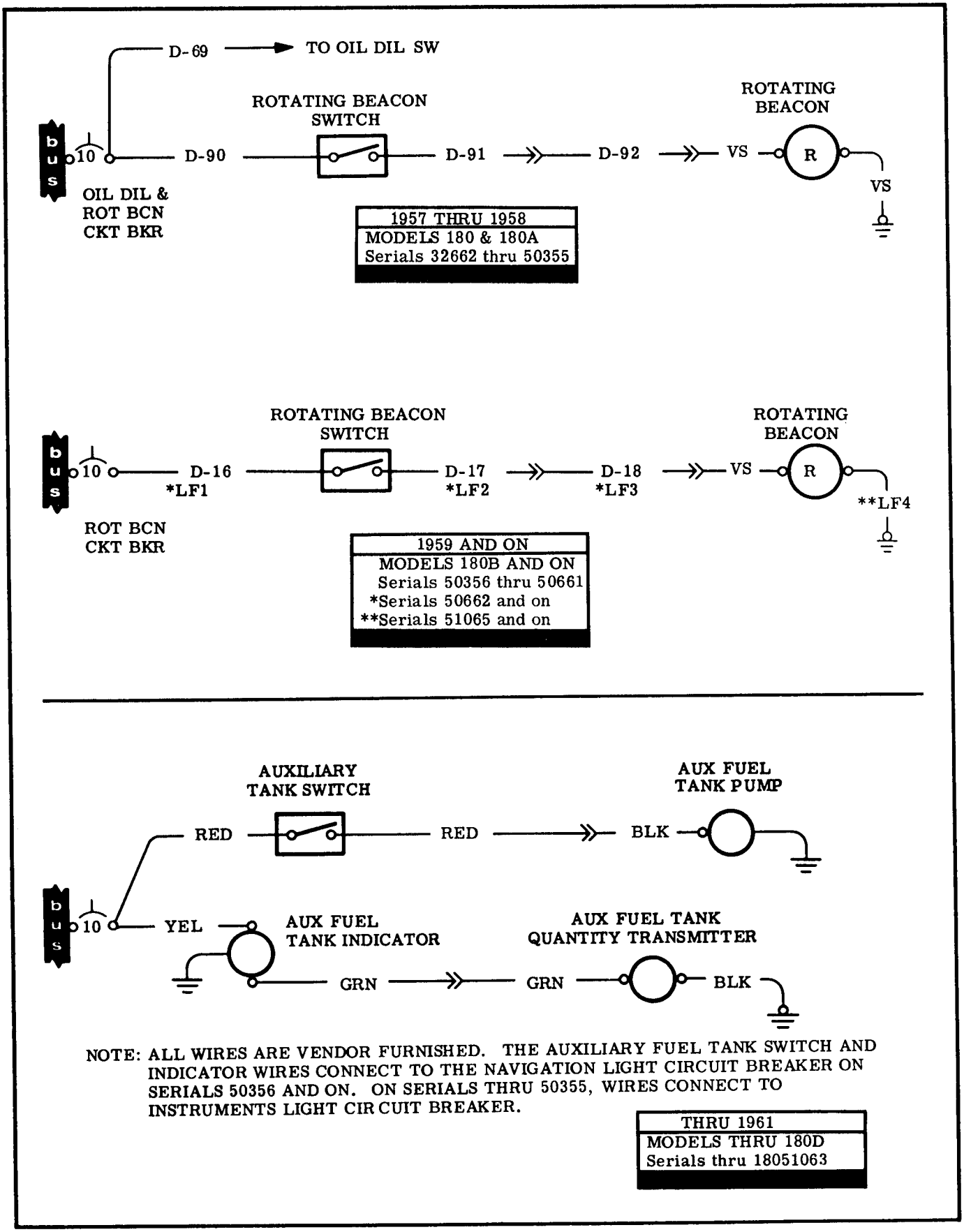

Figure 17-60. Rotating Beacon and Auxiliary Fuel Tank Circuits - Model 180

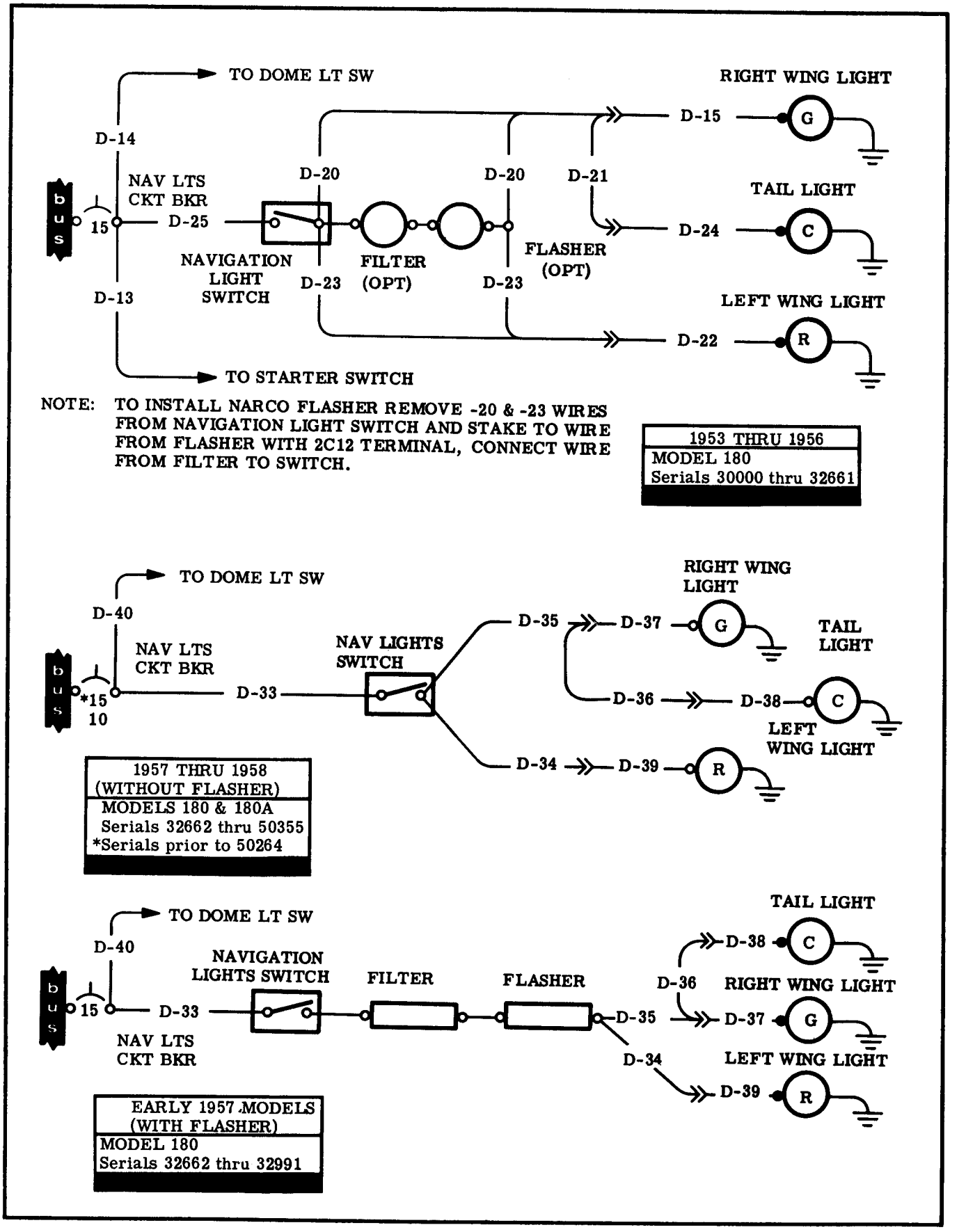

Figure 17-61. Navigation Lights Circuits - Model 180 (Sheet 1 of 3)

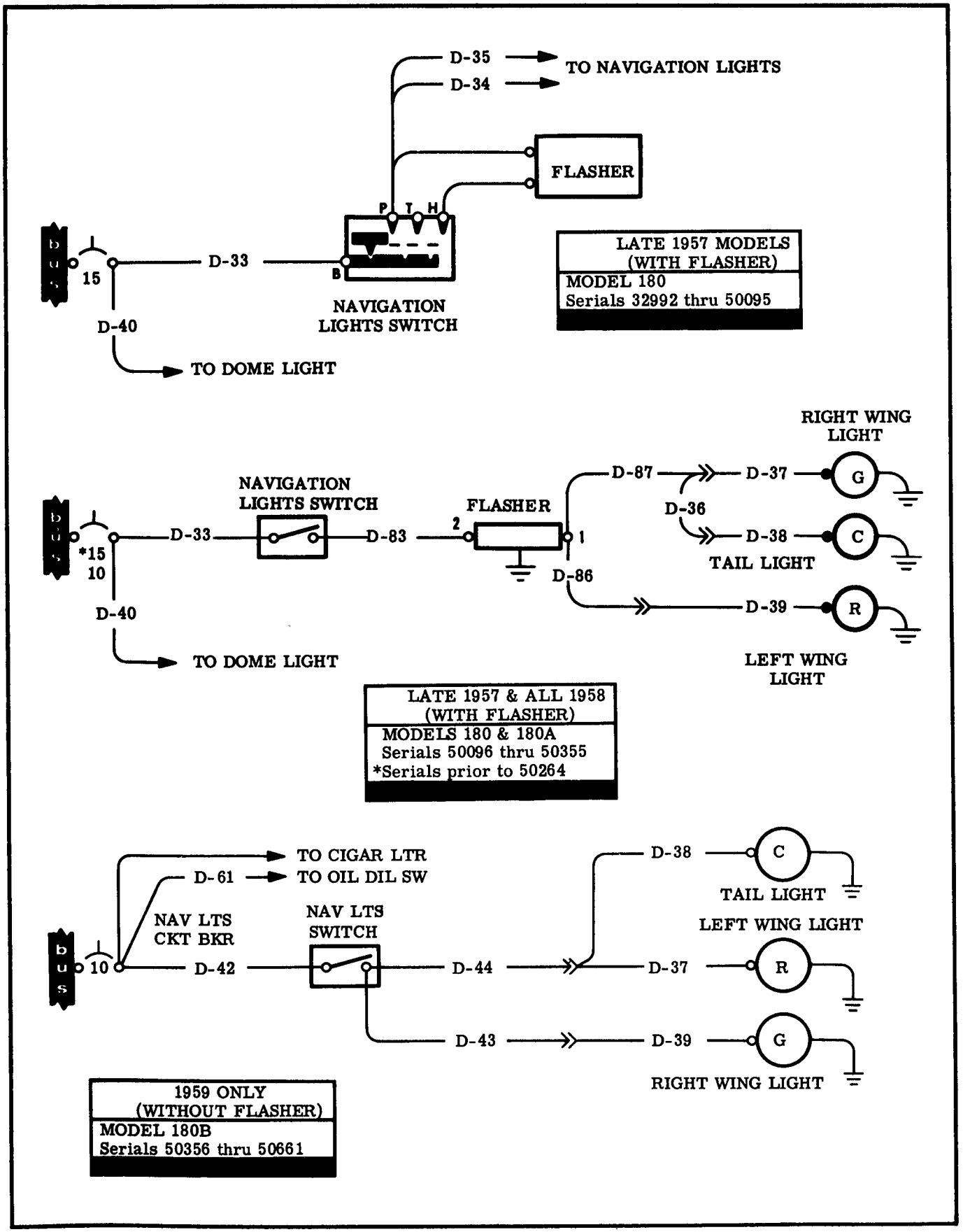

Figure 17-61. Navigation Lights Circuits - Model 180 (Sheet 2 of 3)

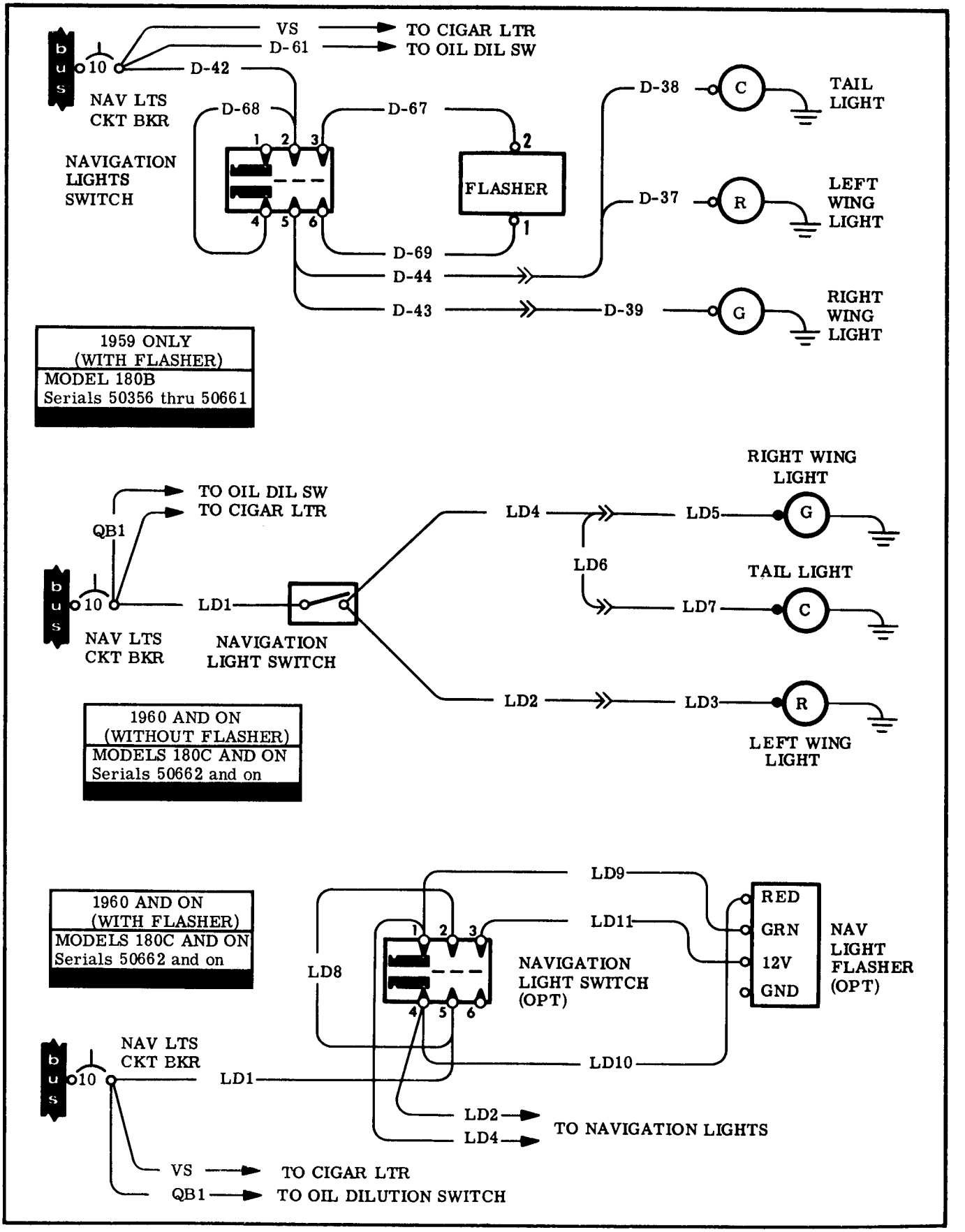

Figure 17-61. Navigation Lights Circuits - Model 180 (Sheet 3 of 3)

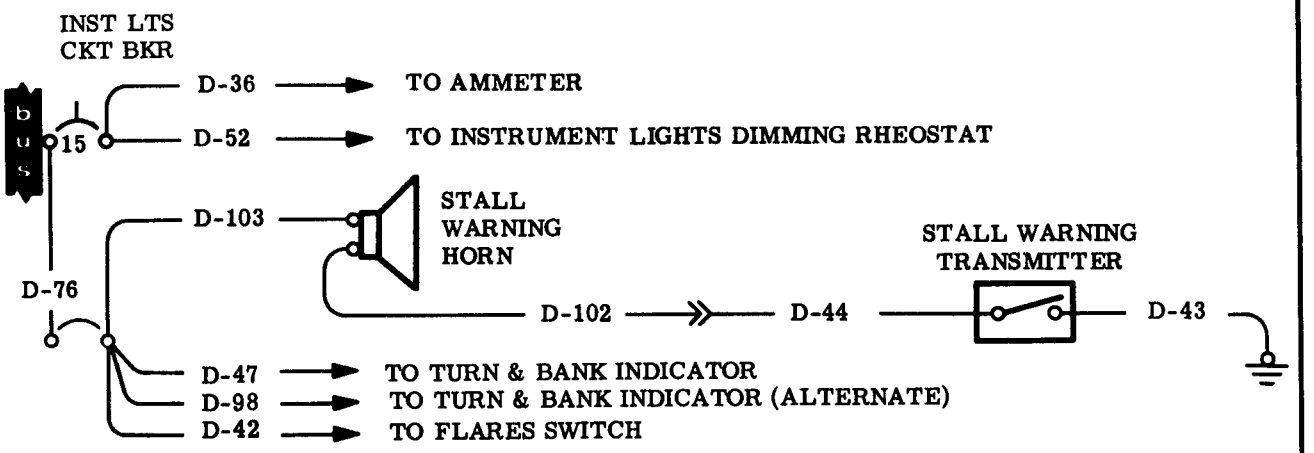

1953 THRU 1956
MODEL 180 Serials 30000 thru 32661

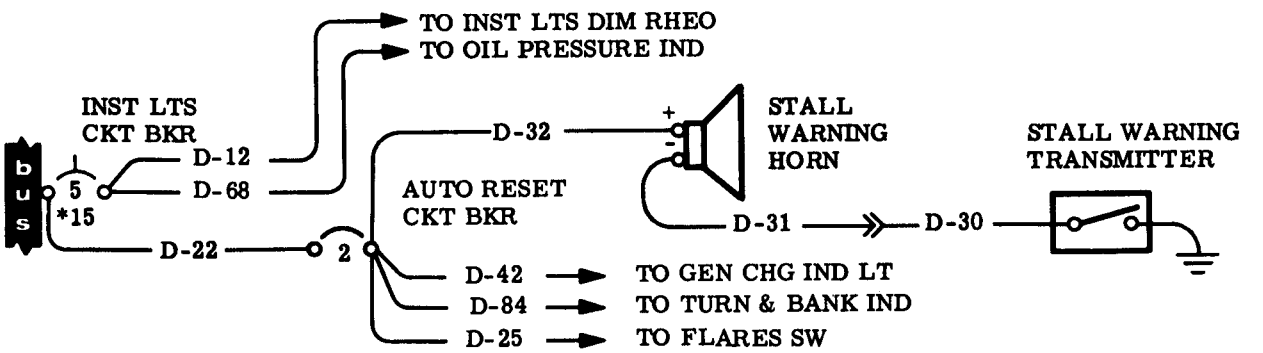

1957 THRU 1958
MODELS 180 & 180A Serials 32662 thru 50355 *Serials prior to 50263

Figure 17-62. Stall Warning Circuits - Model 180 (Sheet 1 of 2)

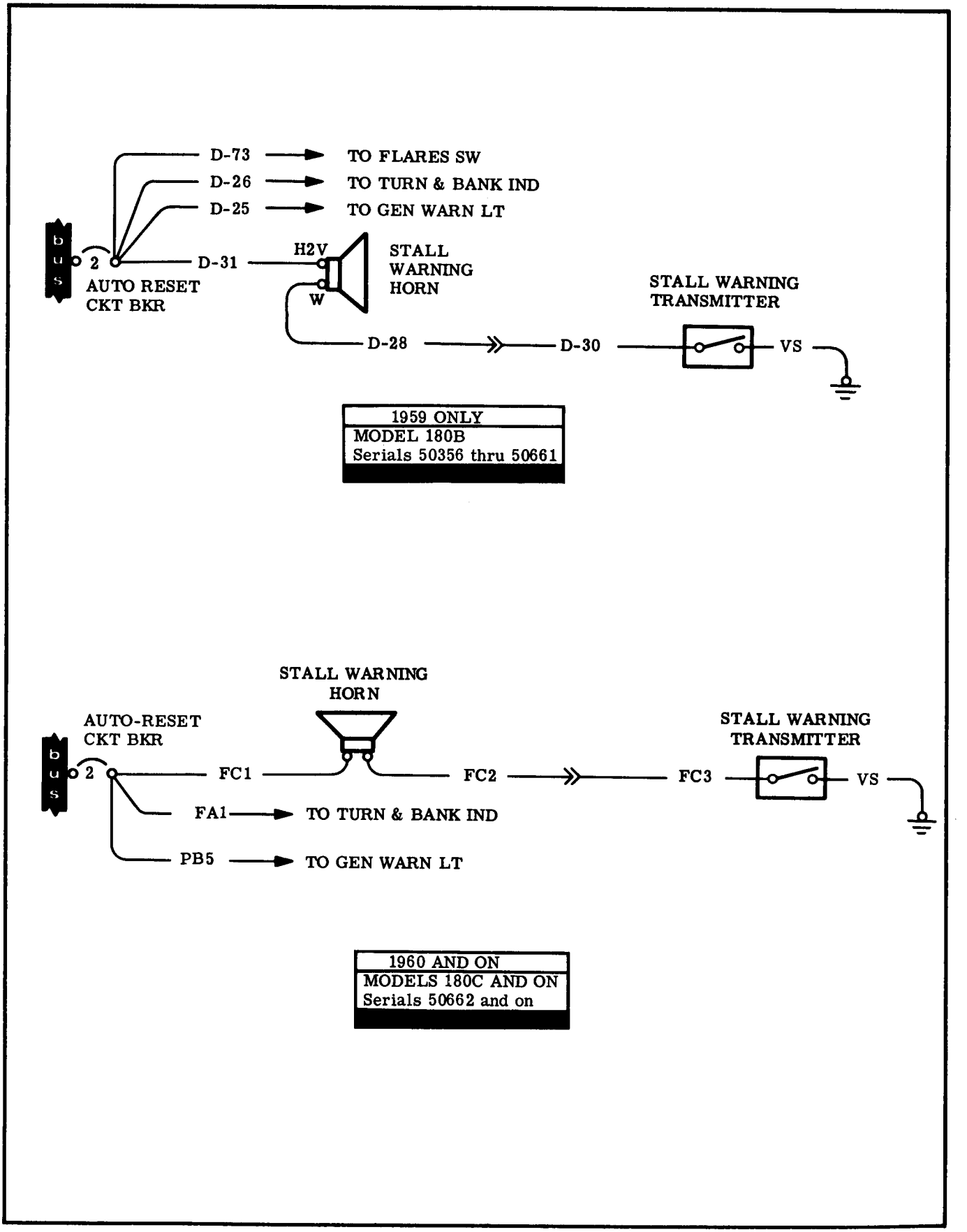

Figure 17-62. Stall Warning Circuits - Model 180 (Sheet 2 of 2)

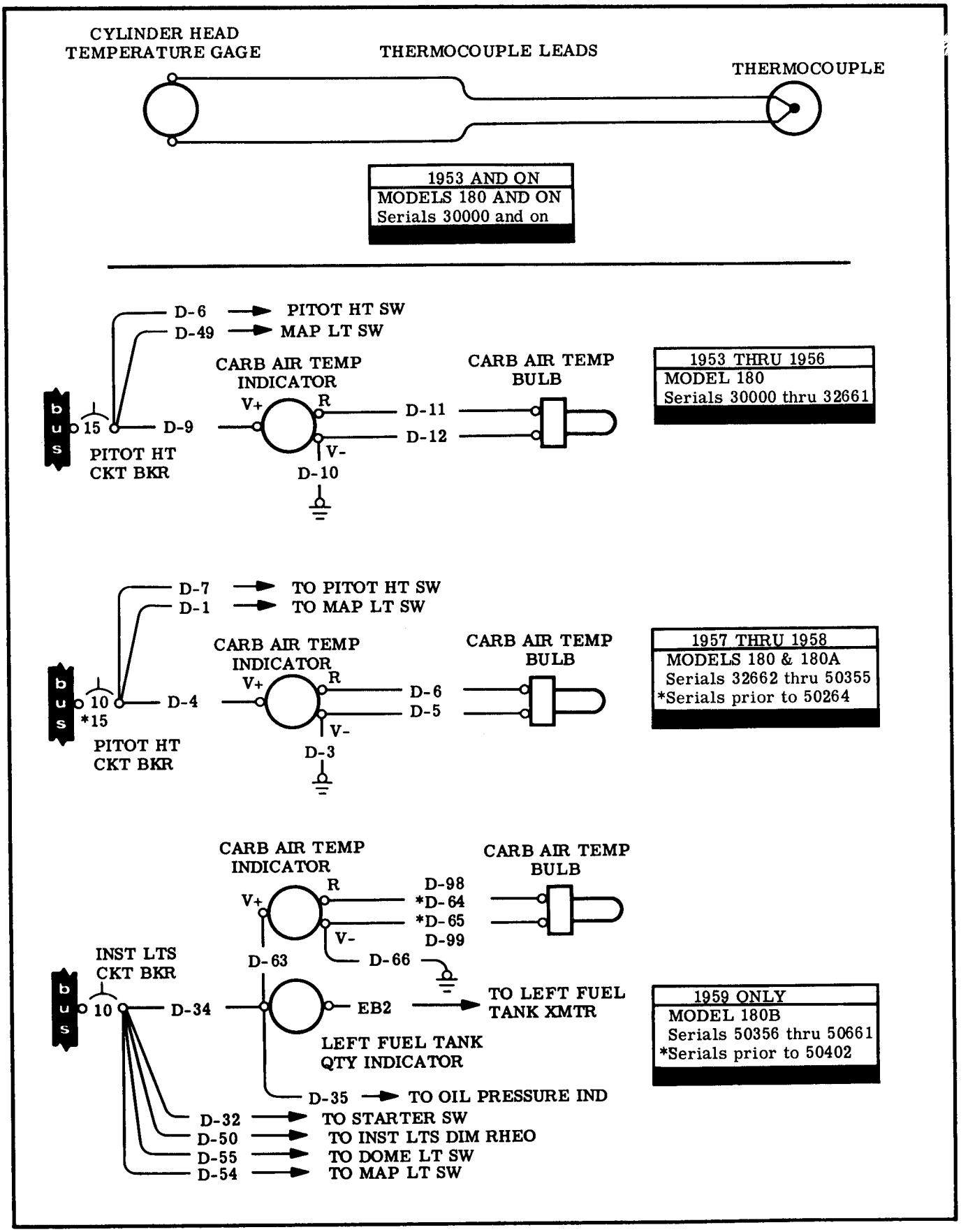

Figure 17-63. Cyl. Head Temp. and Carb. Air Temp. Circuits - Model 180 (Sheet 1 of 2)

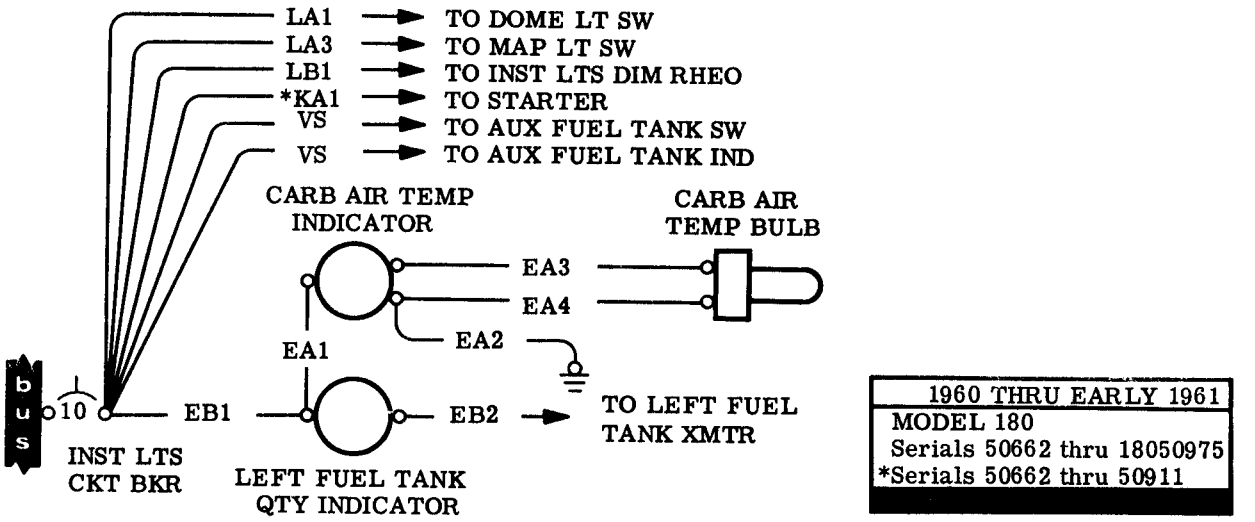

1960 THRU EARLY 1961
MODEL 180
Serials 50662 thru 18050975
*Serials 50662 thru 50911

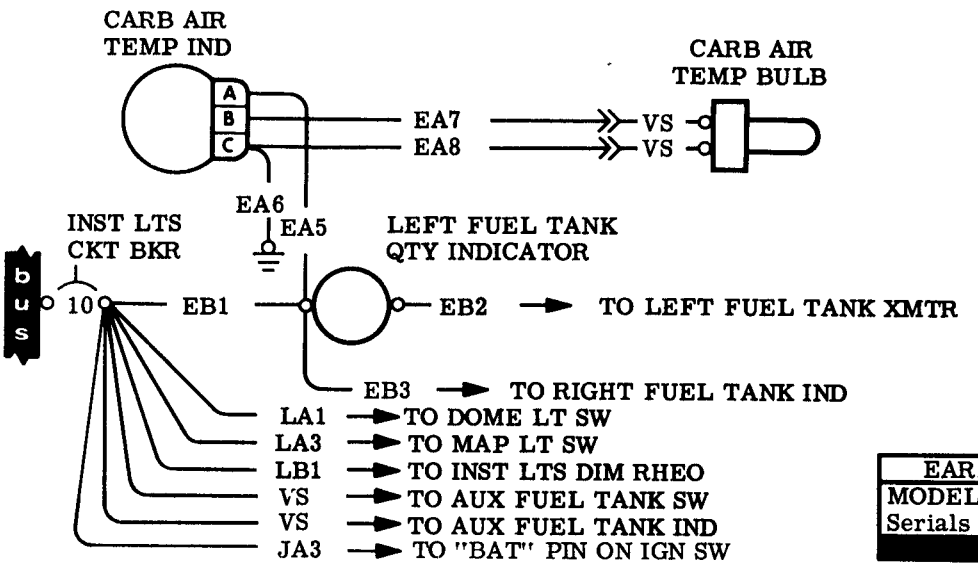

EARLY 1961 AND ON
MODEL 180
Serials 18050976 and on

Figure 17-63. Cyl. Head Temp. and Carb. Air Temp. Circuits - Model 180 (Sheet 2 of 2)

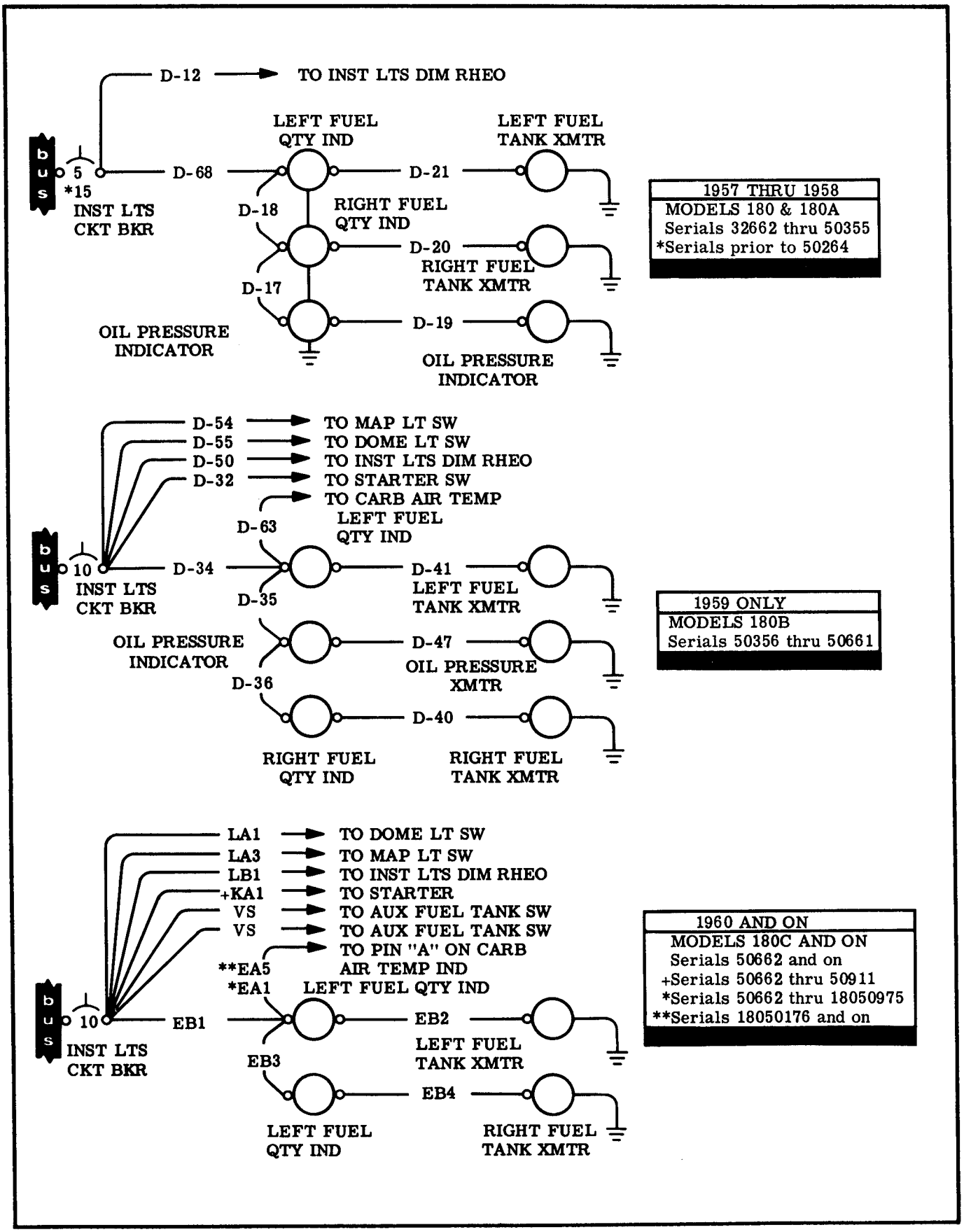

Figure 17-64. Fuel and Oil Pressure Indicator Circuits - Model 180

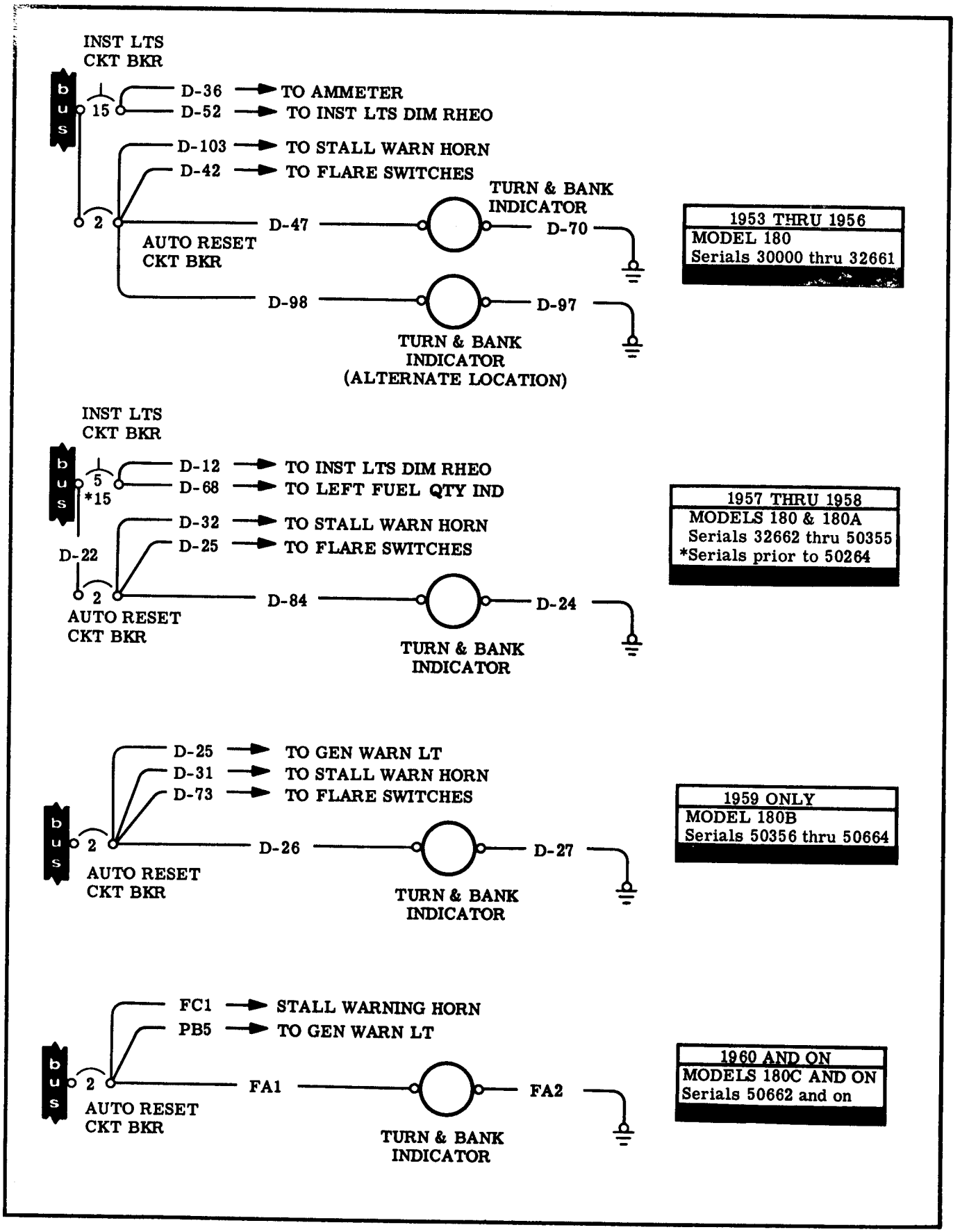

Figure 17-65. Turn-and-Bank Indicator Circuits - Model 180

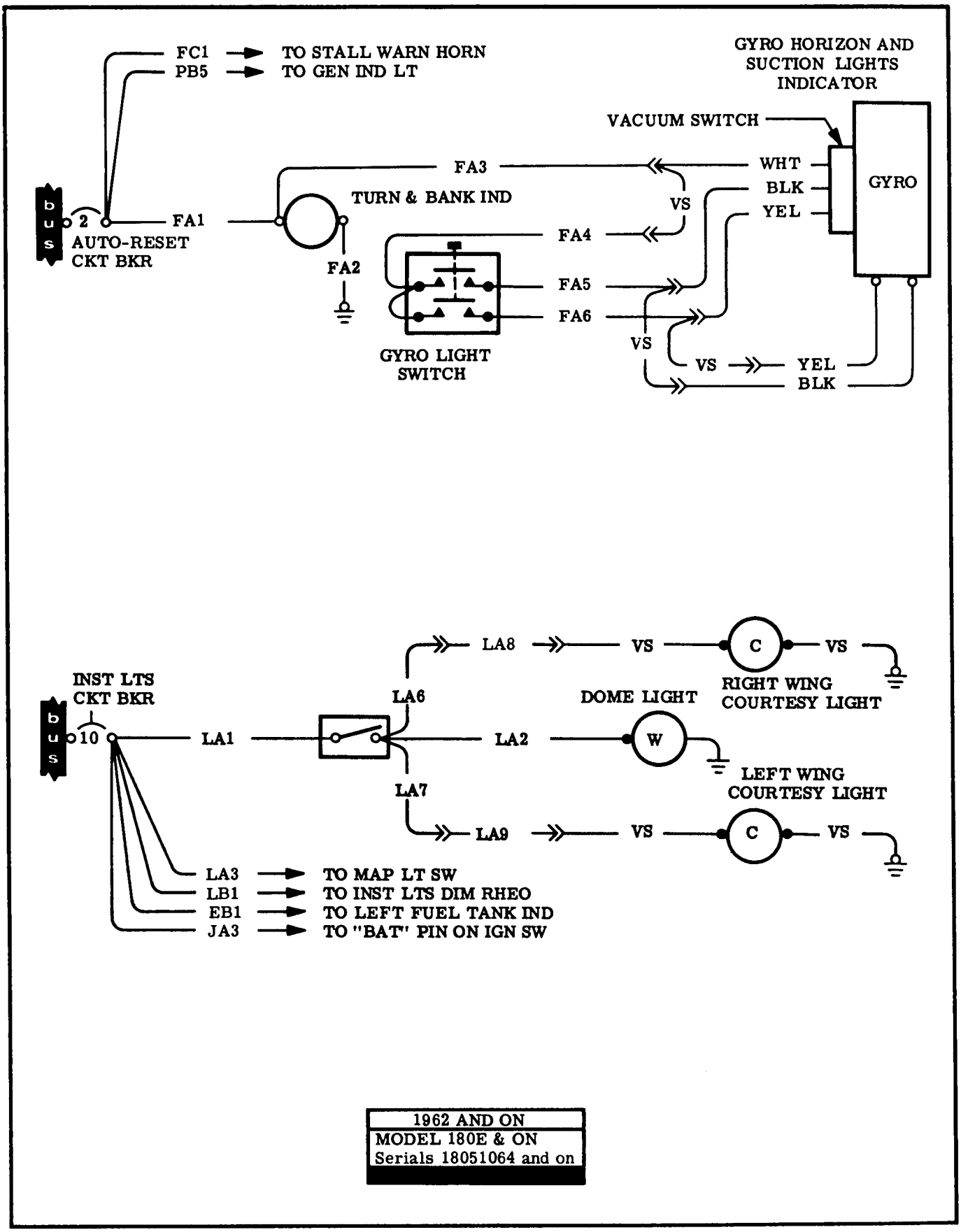

Figure 17-66. Gyro Horizon Indicator and Courtesy Lights Circuits - Model 180

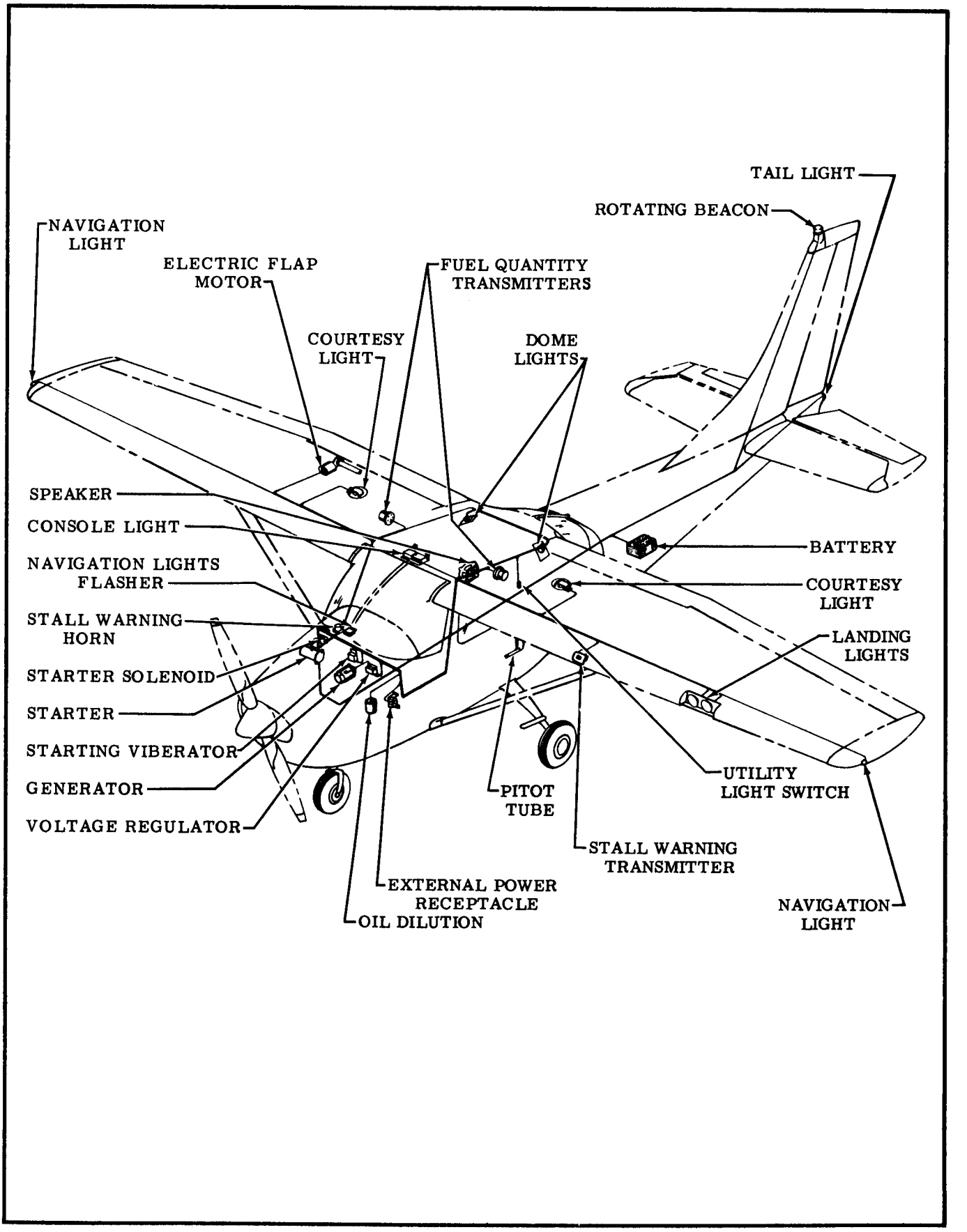

Figure 17-67. Electrical Equipment Installation - Model 182

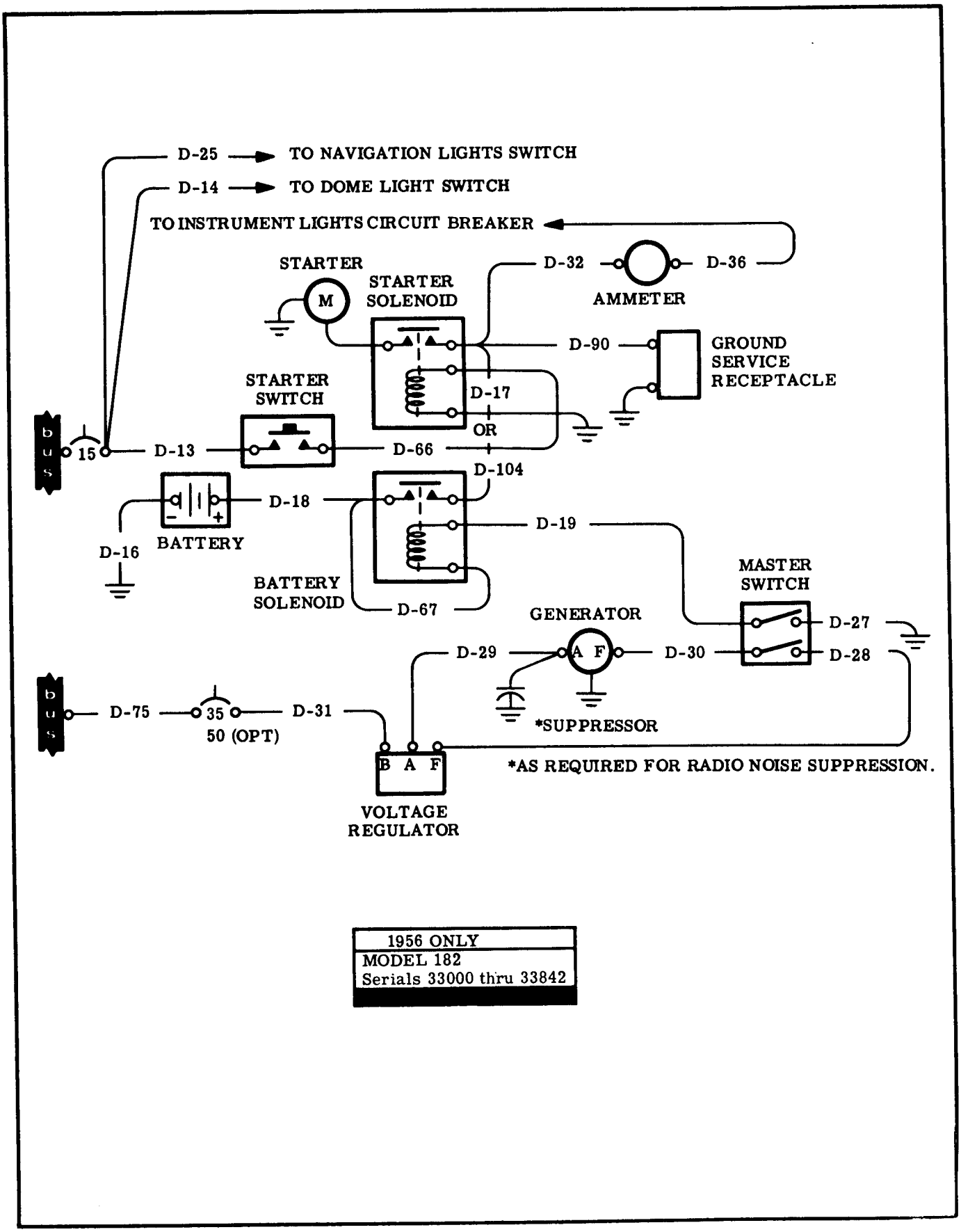

Figure 17-68. Bat., Gnd. Ser., Recpt., Gen., Vol. Reg., Clock & Mag. Circuits - Model 182 (Sheet 1 of 6)

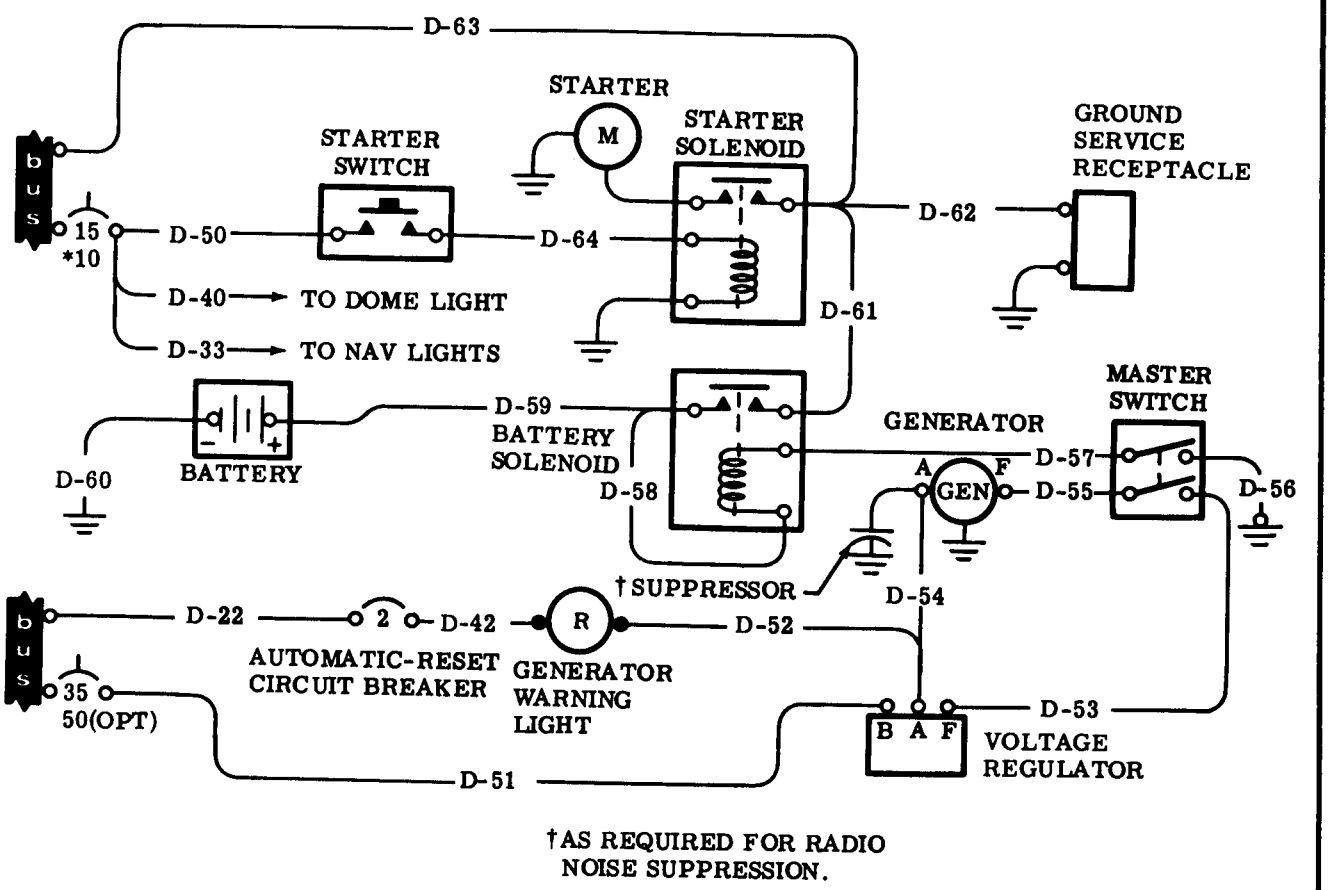

†AS REQUIRED FOR RADIO NOISE SUPPRESSION.

1957 THRU 1958
MODELS 182 & 182A
Serials 33843 thru 51556
*Serials 51224 thru 51556

Figure 17-68. Bat., Gnd. Ser., Recpt., Gen., Vol. Reg., Clock & Mag. Circuits Model 182 (Sheet 2 of 6)

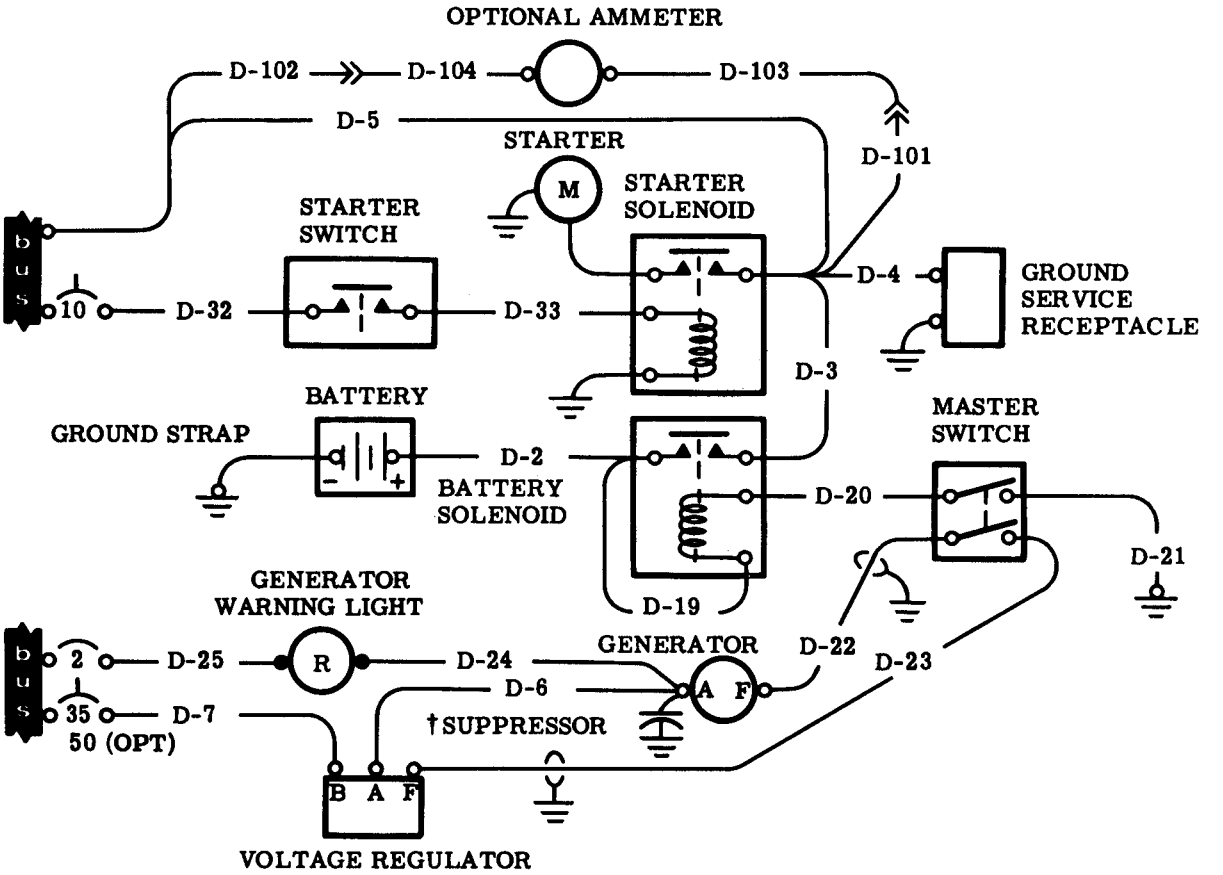

NOTES: 1. WHEN AMMETER IS INSTALLED, WIRE D-5 IS NOT USED.
2. †AS REQUIRED FOR RADIO NOISE SUPPRESSION.

1959 ONLY
MODEL 182B Serials 51557 thru 52358

Figure 17-68. Bat., Gnd. Ser., Recpt., Gen., Vol. Reg., Clock & Mag. Circuits - Model 182 (Sheet 3 of 6)

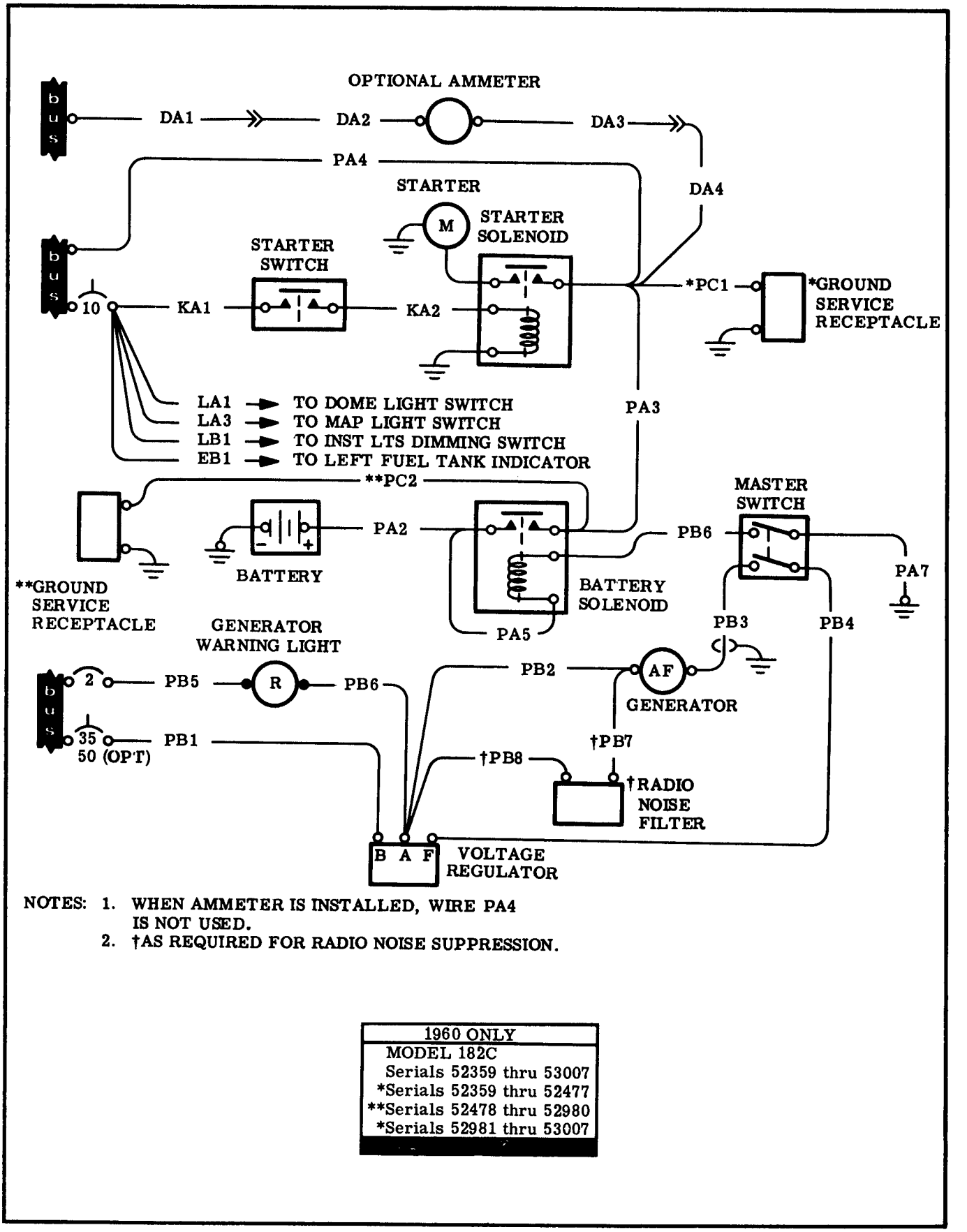

NOTES: 1. WHEN AMMETER IS INSTALLED, WIRE PA4 IS NOT USED.
2. †AS REQUIRED FOR RADIO NOISE SUPPRESSION.

1960 ONLY
MODEL 182C
Serials 52359 thru 53007
*Serials 52359 thru 52477
**Serials 52478 thru 52980
*Serials 52981 thru 53007

Figure 17-68. Bat., Gnd. Ser., Recpt., Gen., Vol. Reg., Clock & Mag. Circuits - Model 182 (Sheet 4 of 6)

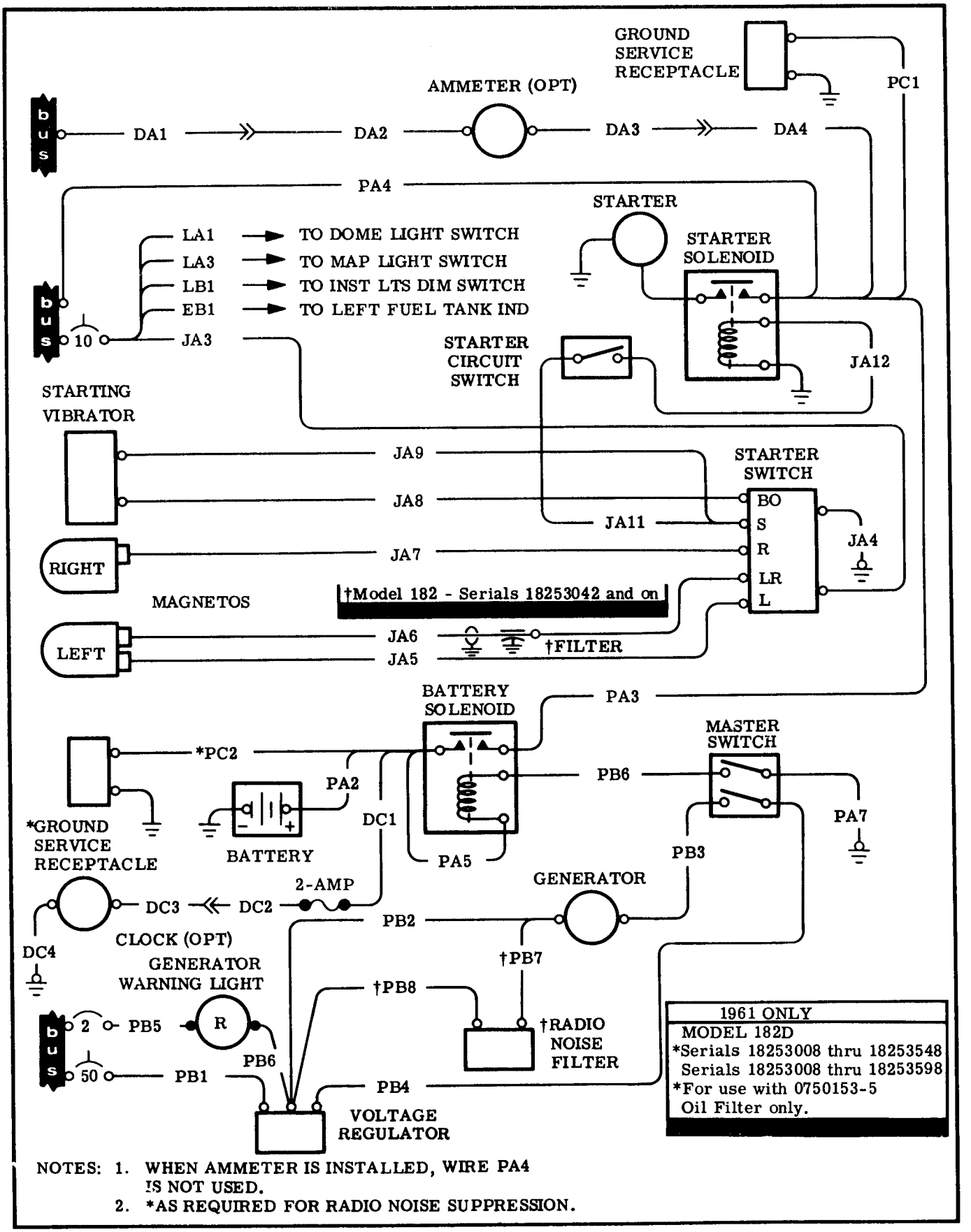

NOTES: 1. WHEN AMMETER IS INSTALLED, WIRE PA4 IS NOT USED.
2. *AS REQUIRED FOR RADIO NOISE SUPPRESSION.

Figure 17-68. Bat., Gnd. Ser., Recpt., Gen., Vol. Reg., Clock & Mag. Circuits - Model 182 (Sheet 5 of 6)

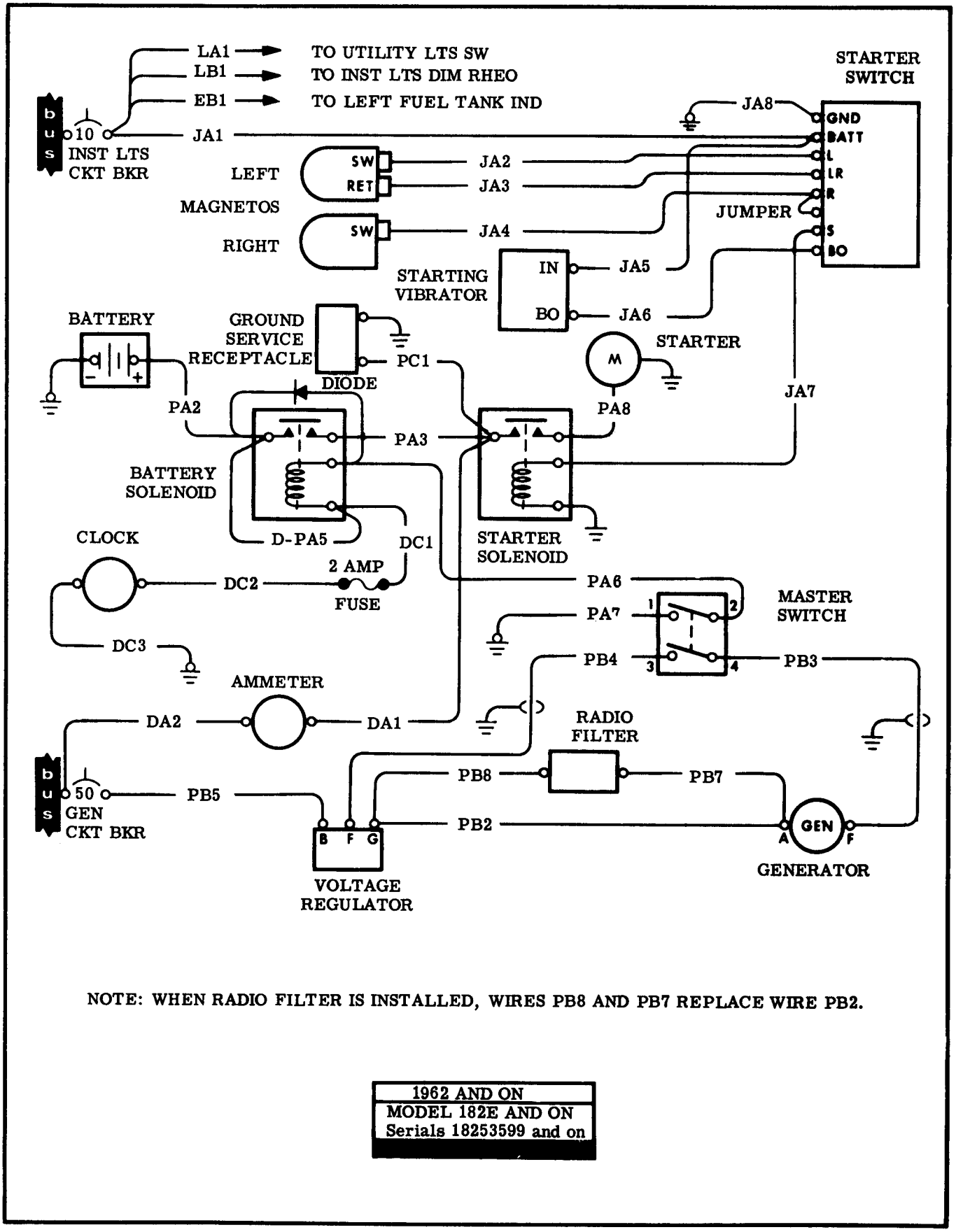

Figure 17-68. Bat., Gnd. Ser., Recpt., Gen., Vol. Reg., Clock & Mag. Circuits - Model 182 (Sheet 6 of 6)

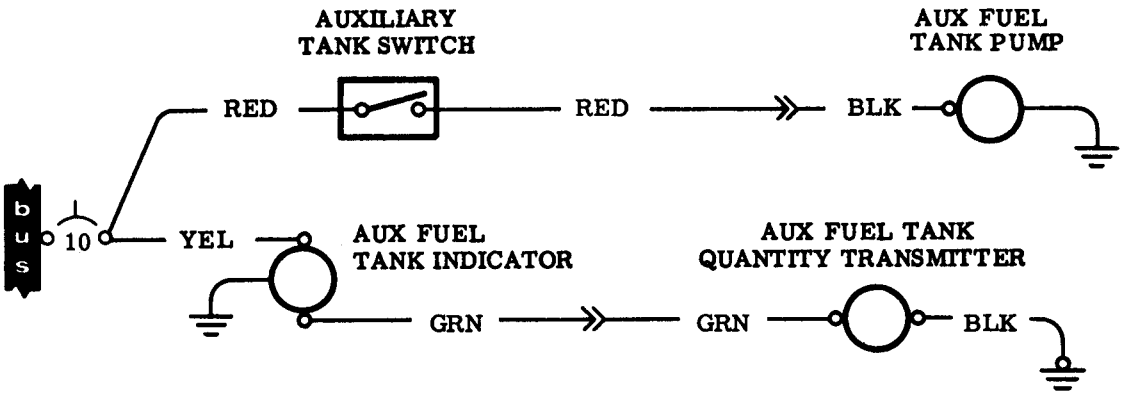

NOTE: ALL WIRES ARE VENDOR FURNISHED. THE AUXILIARY FUEL TANK SWITCH AND INDICATOR WIRES CONNECT TO THE NAVIGATION LIGHT CIRCUIT BREAKER ON SERIAL 51557 AND ON. ON SERIALS THRU 51556, WIRES CONNECT TO INSTRUMENTS LIGHT CIRCUIT BREAKER.

THRU 1961
MODELS THRU 182D
Serials thru 18253598

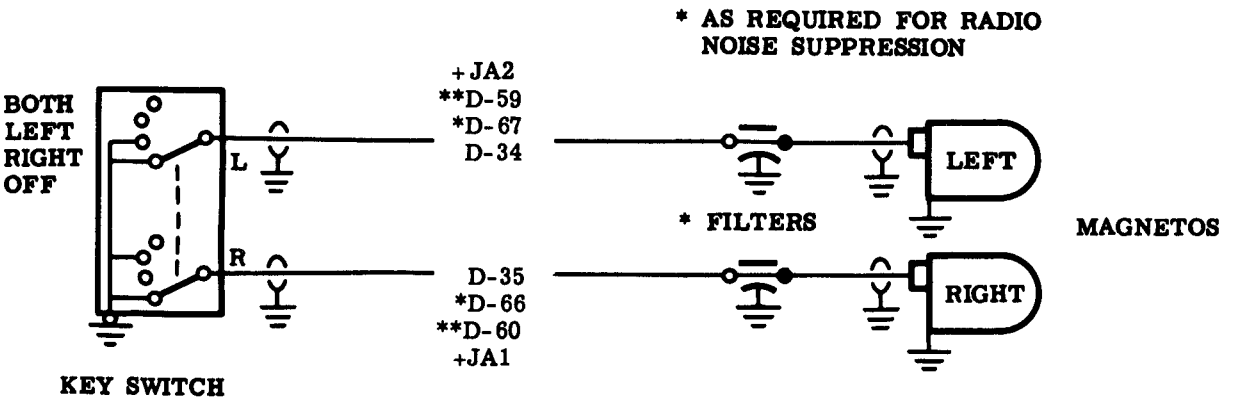

NOTE: FOR 1961 AND ON MAGNETO CIRCUITS, SEE FIGURE 17-68.

1956 THRU 1960
MODELS 182 THRU 182C
Serials 33000 thru 33842
*Serials 33843 thru 51556
**Serials 51557 thru 52358
+Serials 52359 thru 53007

Figure 17-69. Auxiliary Fuel Tank and Magneto Circuits - Model 182

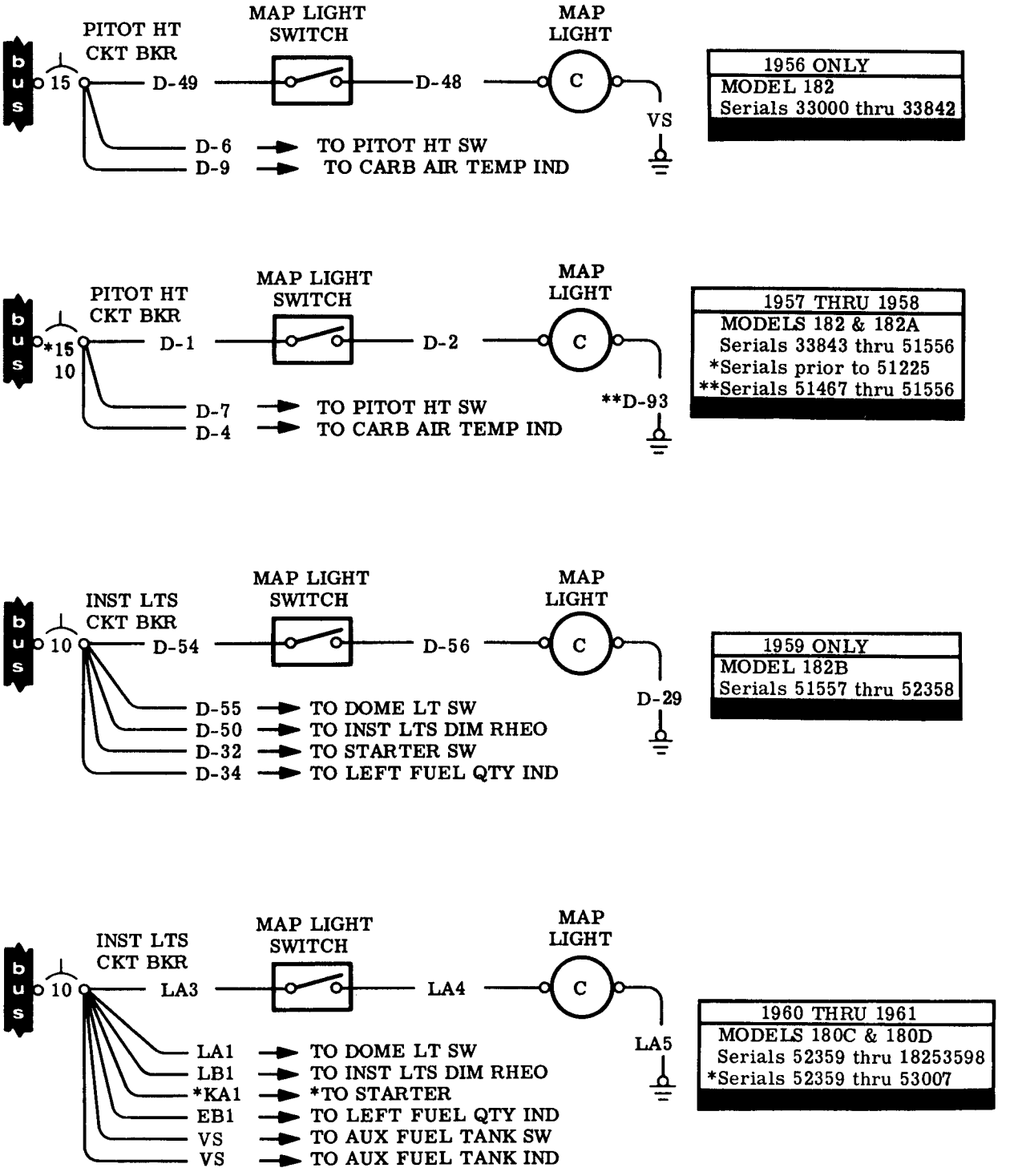

NOTE: FOR 1962 & ON MAP LIGHT, SEE FIGURE 17-77.

Figure 17-70. Map Light Circuits - Model 182

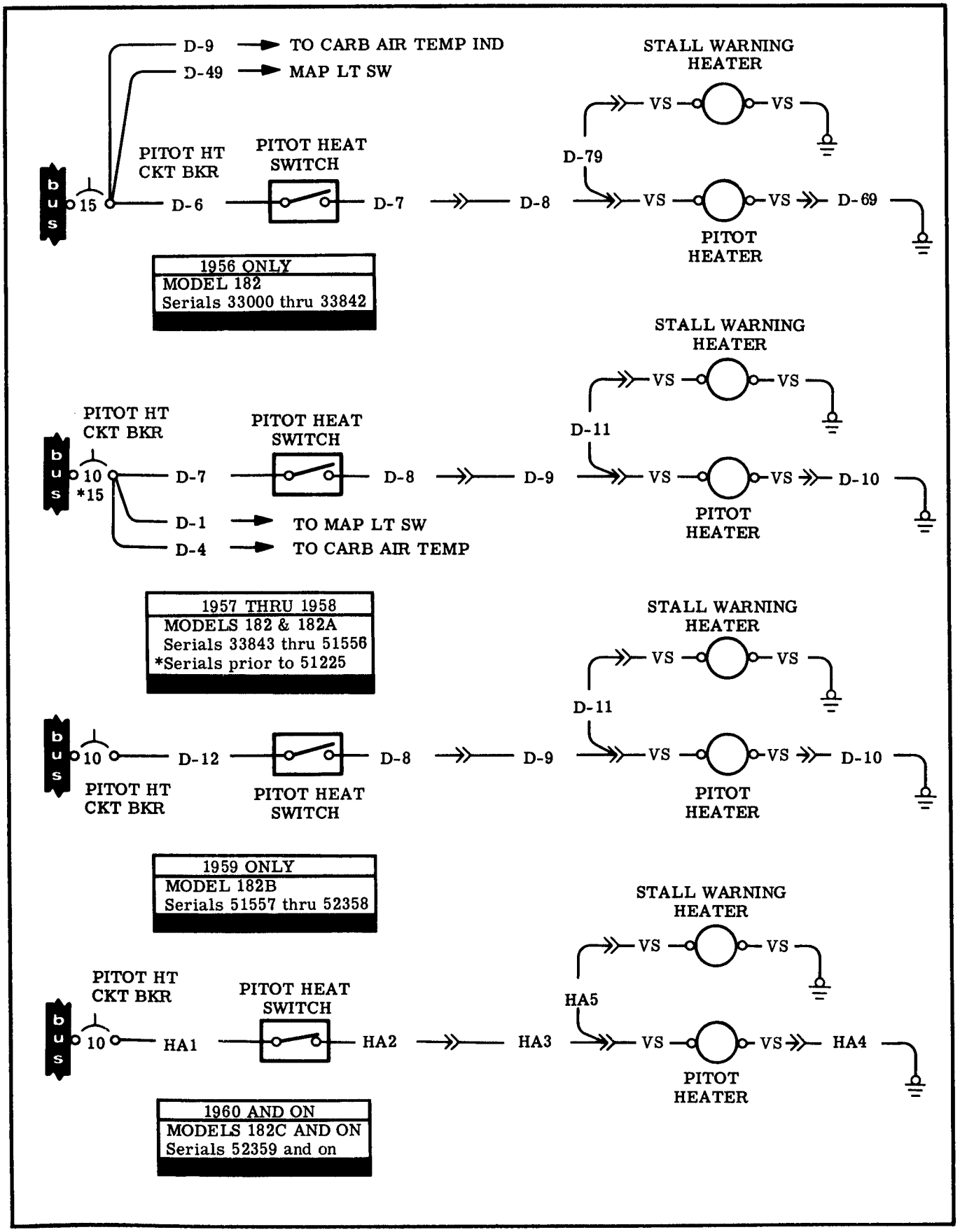

Figure 17-71. Pitot Heater and Stall Warning Heater Circuits - Model 182

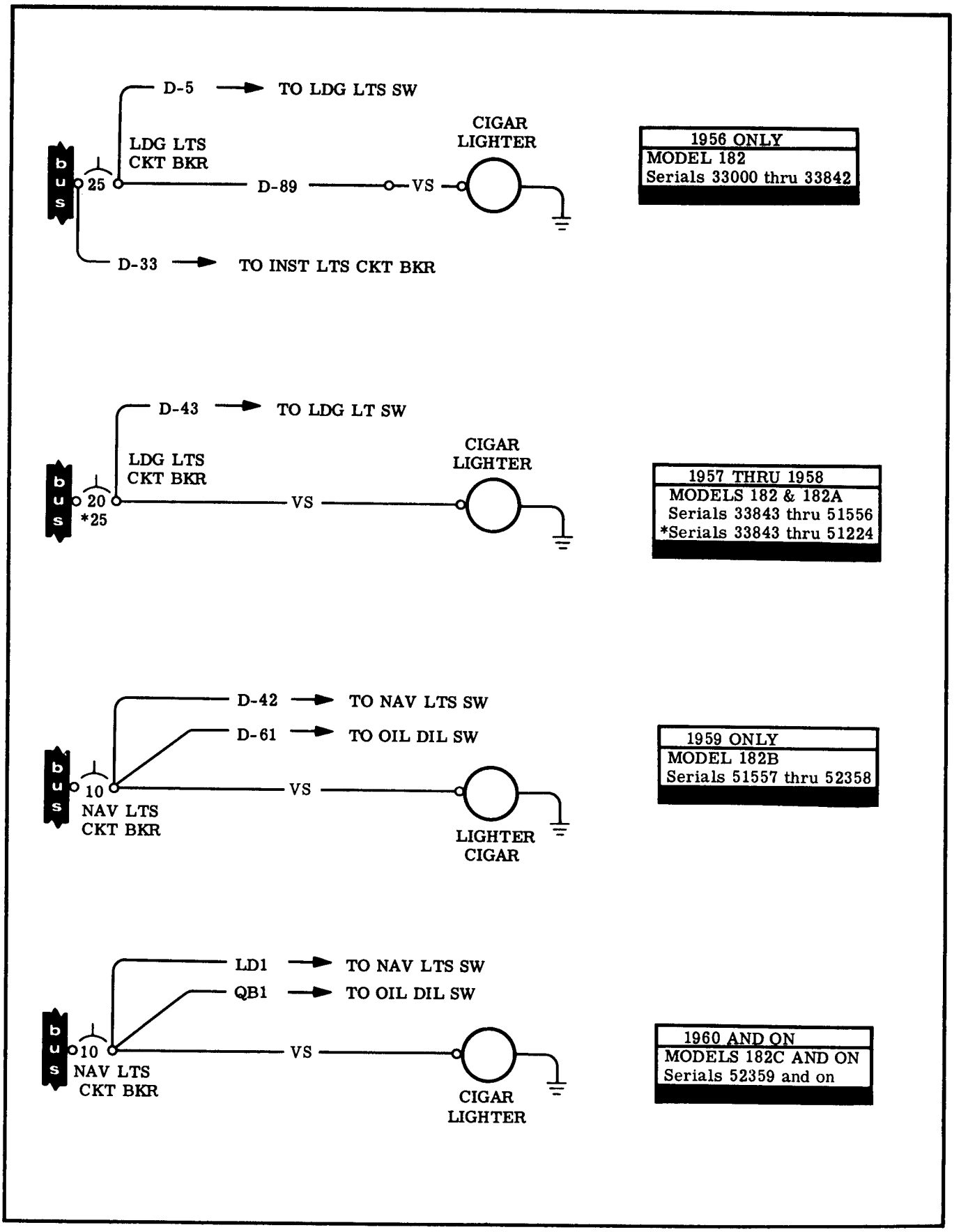

Figure 17-72. Cigar Lighter Circuits - Model 182

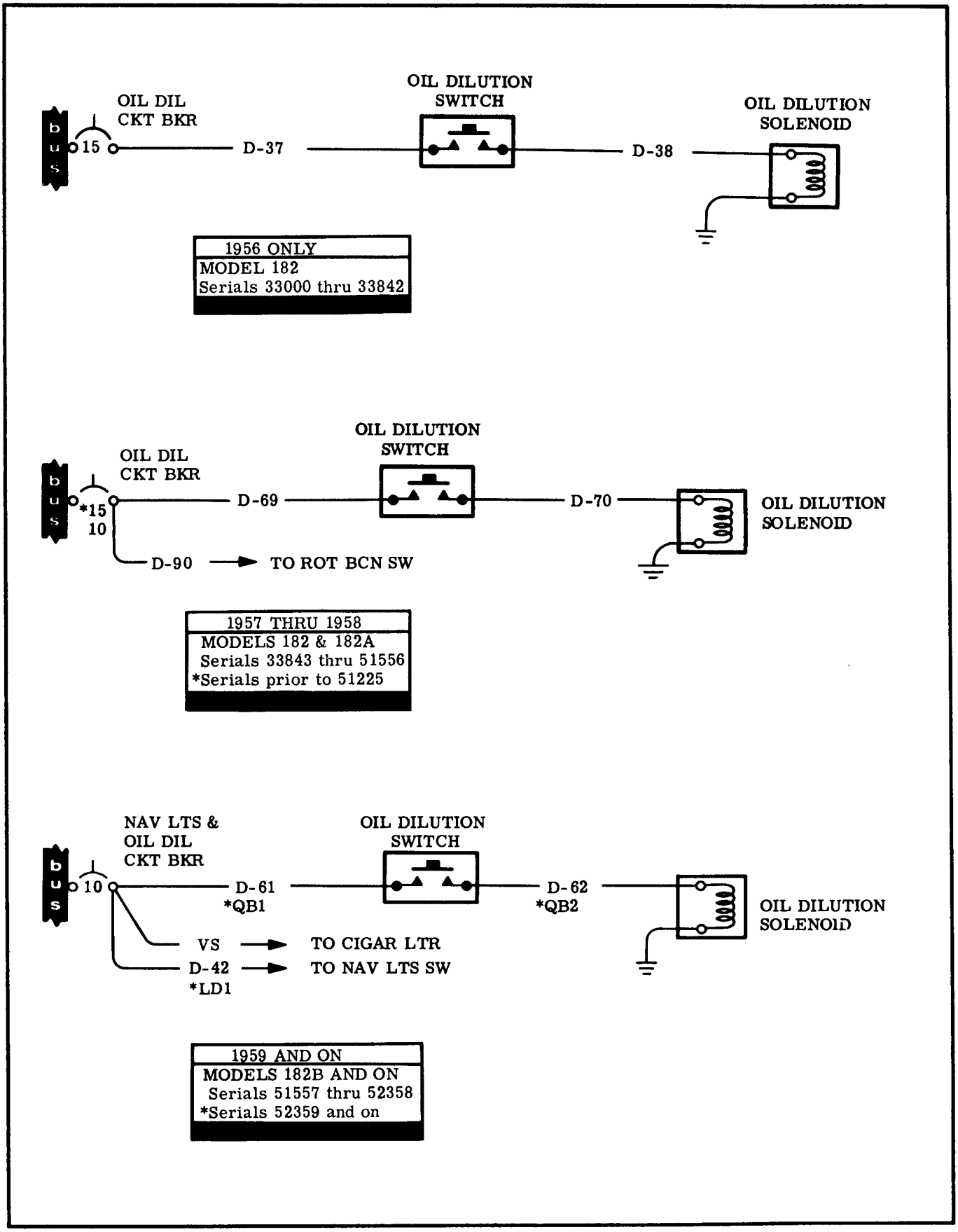

Figure 17-73. Oil Dilution Circuits - Model 182

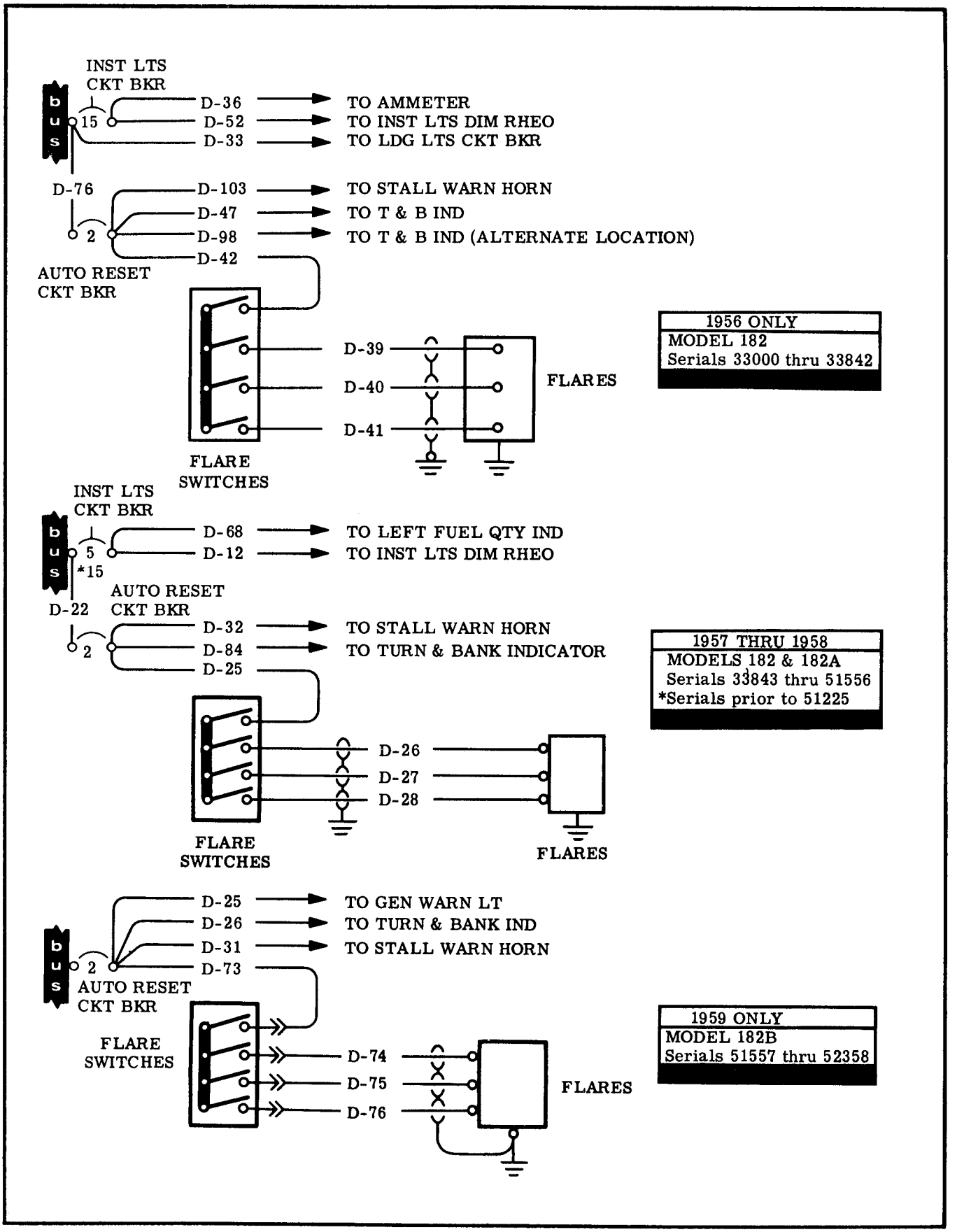

Figure 17-74. Flare Circuits - Model 182

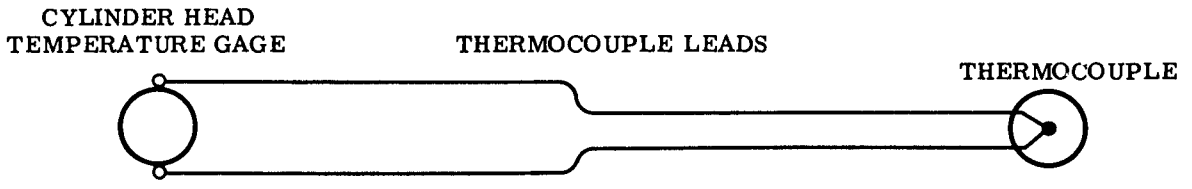

1956 THRU 1961
MODELS 182 THRU 182D Serials 33000 thru 18253598

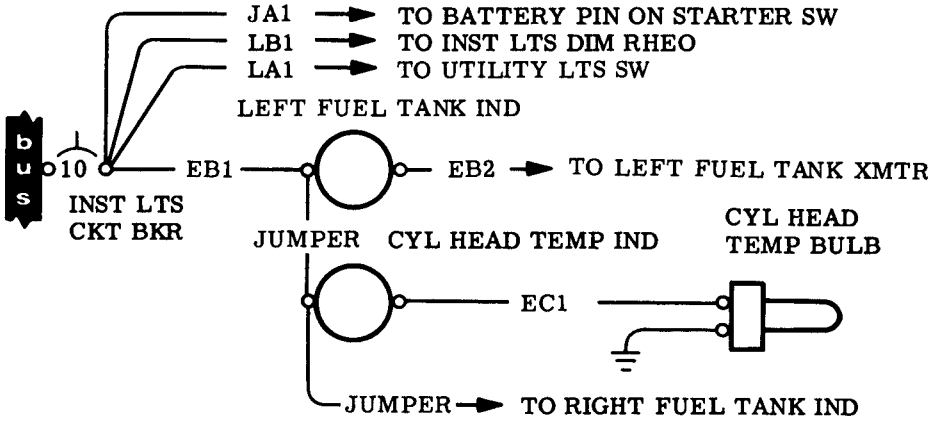

1962 AND ON
MODEL 182E AND ON Serials 18253599 and on

Figure 17-75. Cylinder Head Temperature Circuits - Model 182

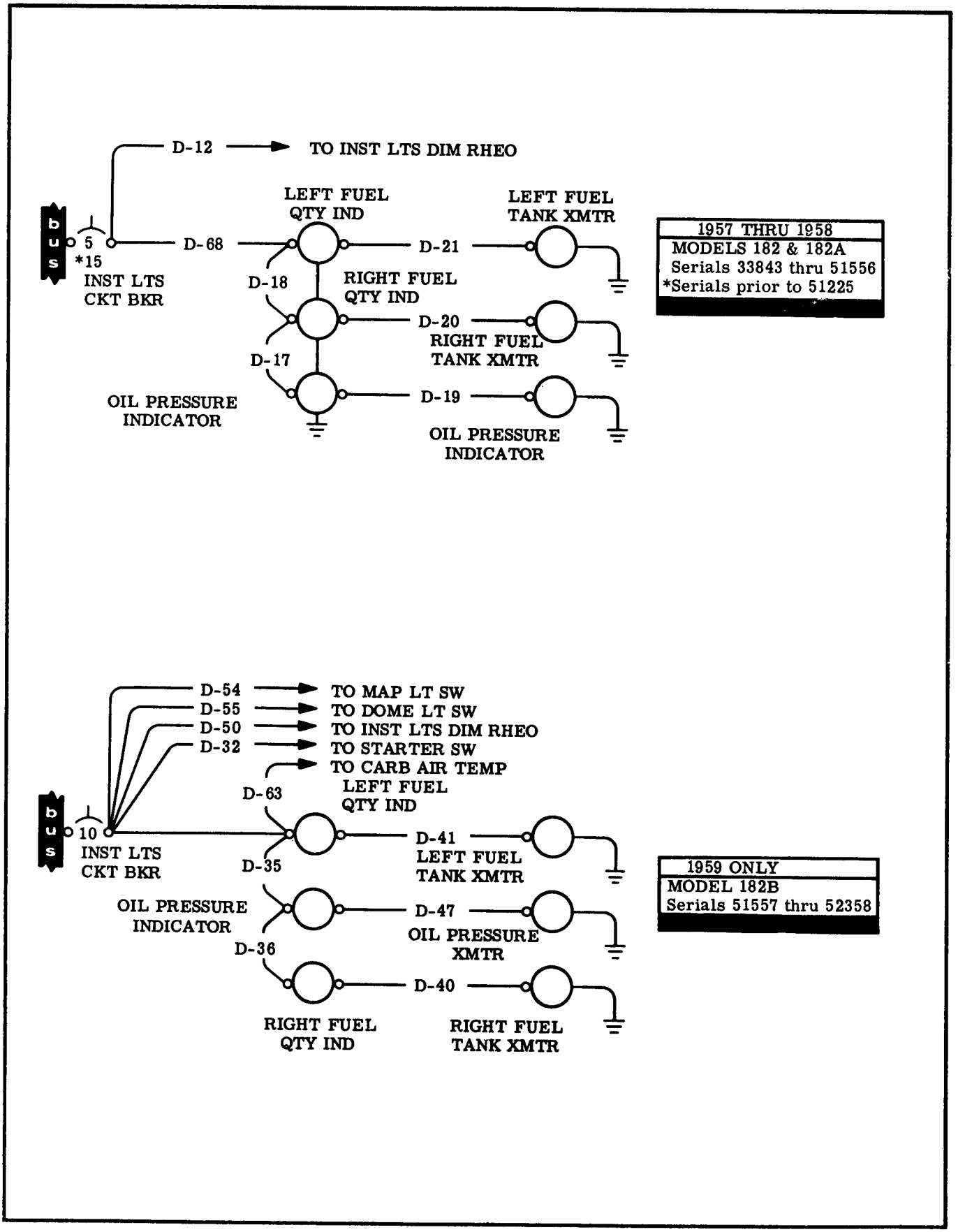

Figure 17-76. Fuel Indicators and Oil Pressure Indicator Circuits - Model 182 (Sheet 1 of 2)

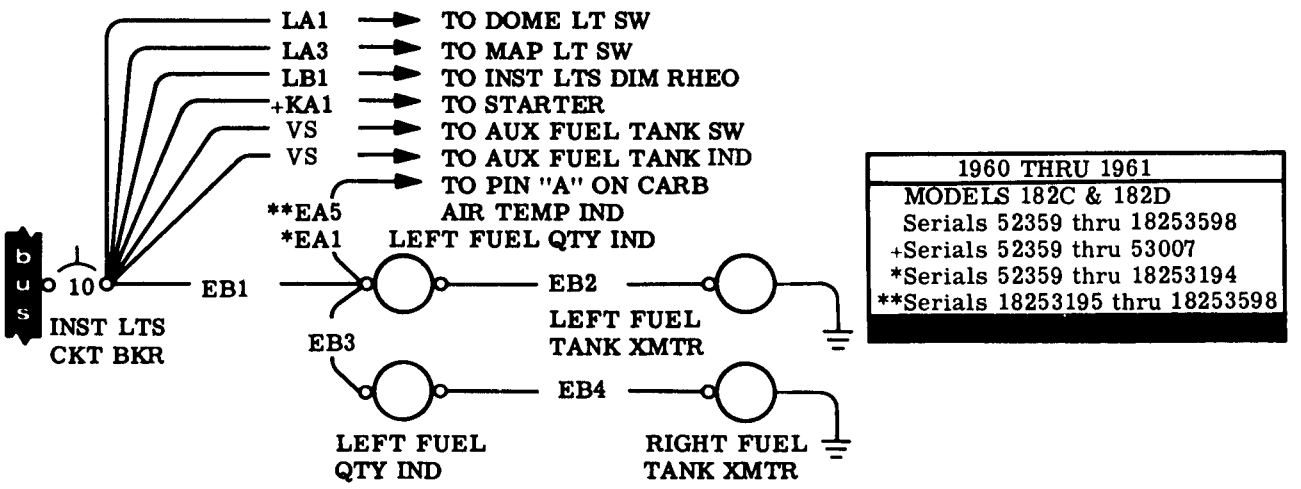

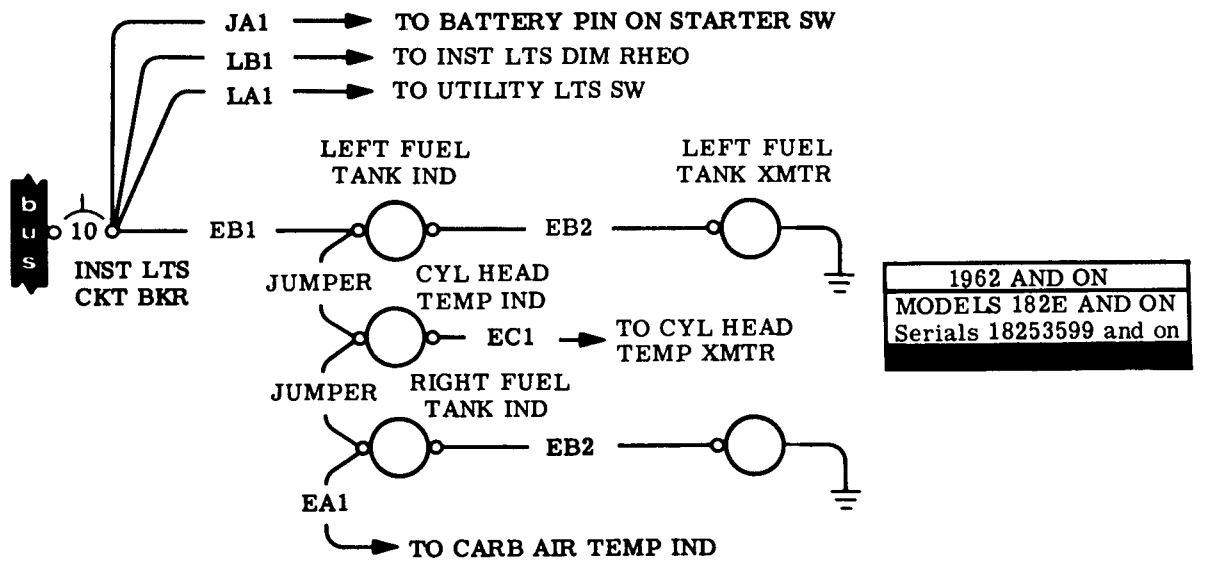

Figure 17-76. Fuel Indicator and Oil Pressure Indicator Circuits - Model 182 (Sheet 2 of 2)

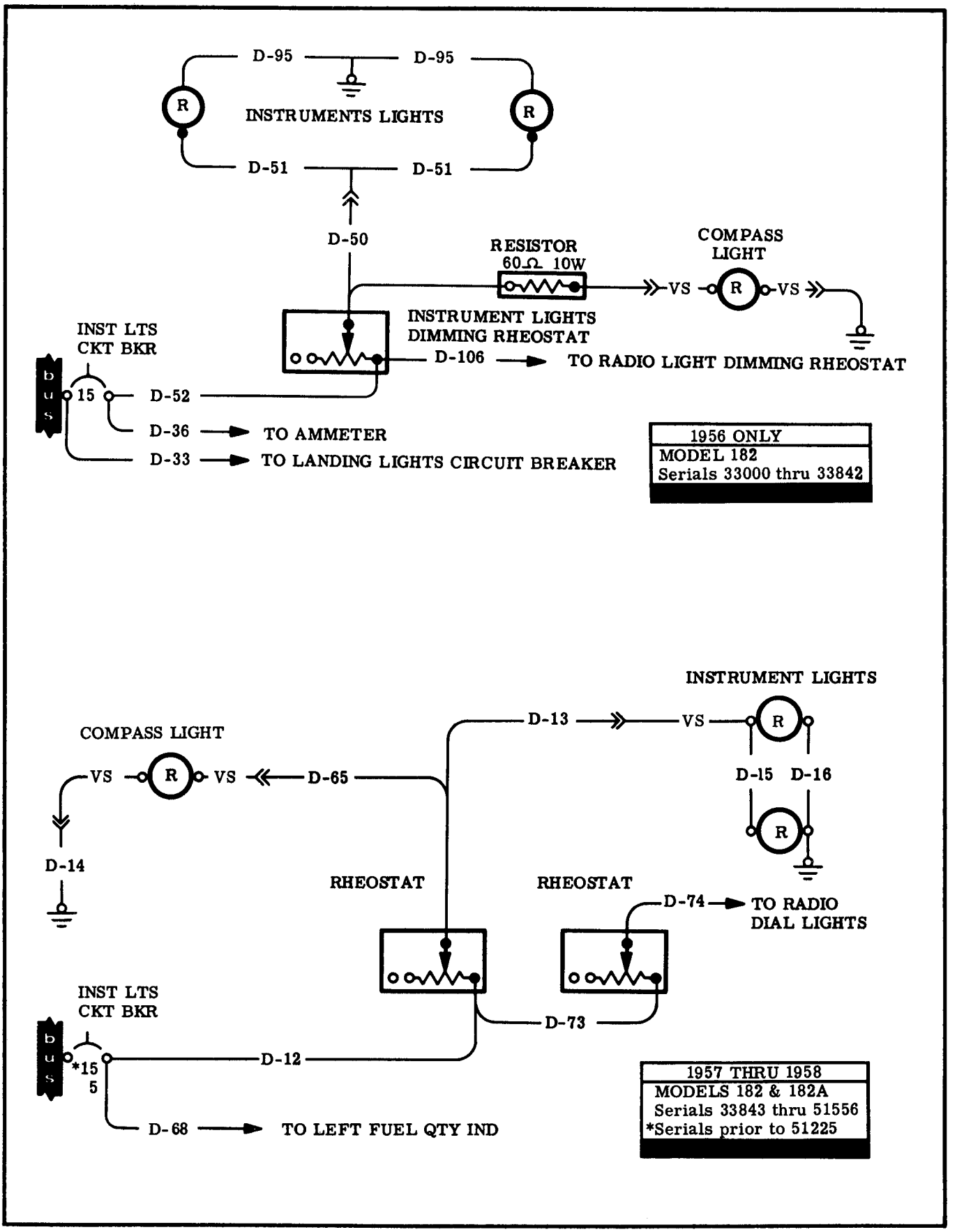

Figure 17-77. Compass and Instrument Lights Circuits - Model 182 (Sheet 1 of 3)

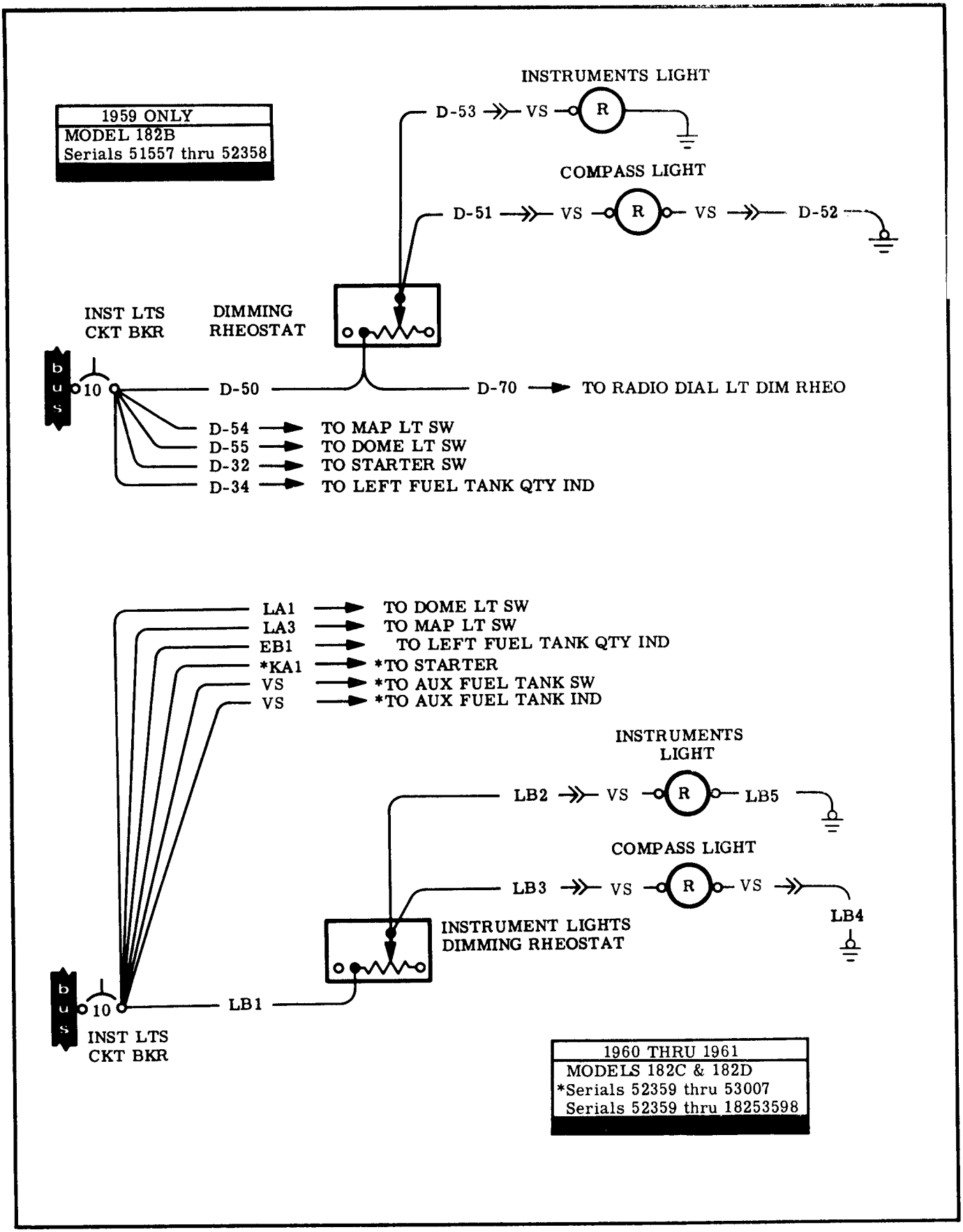

Figure 17-77. Compass and Instrument Lights Circuits - Model 182 (Sheet 2 of 3)

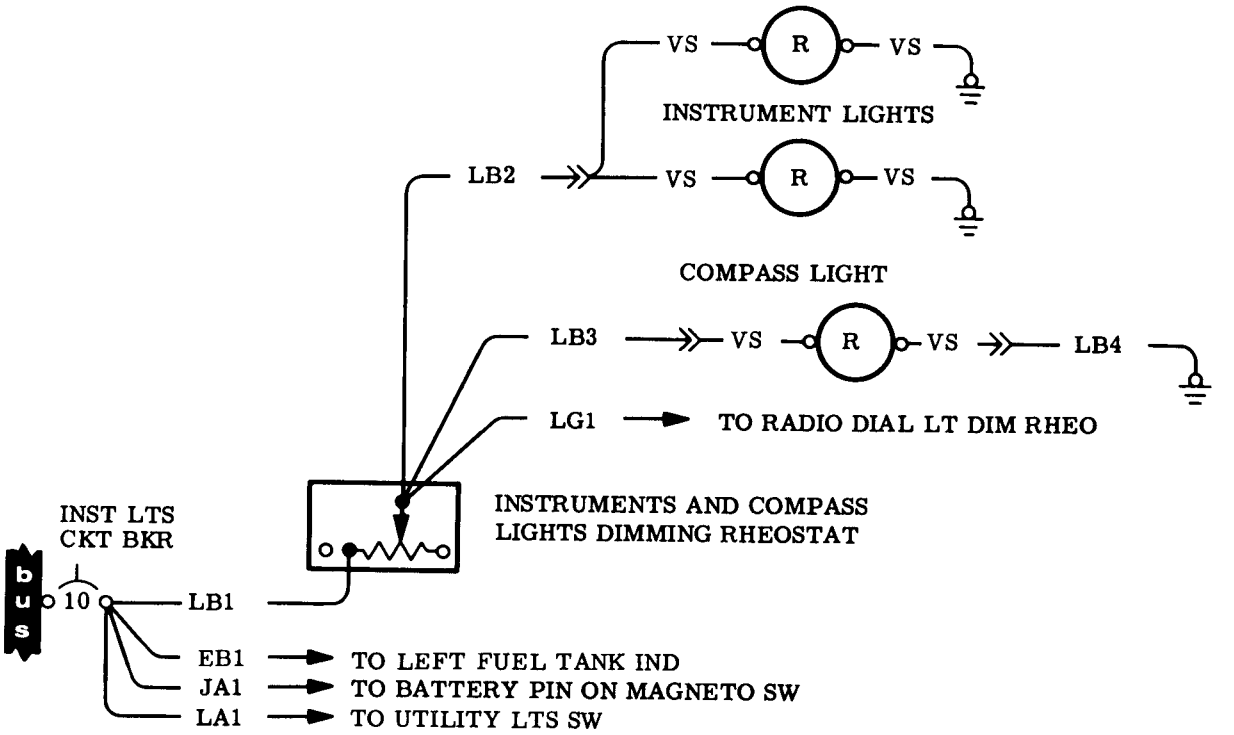

1962 AND ON
MODEL 182E AND ON Serials 18253599 and on

Figure 17-77. Compass and Instrument Lights Circuits - Model 182 (Sheet 3 of 3)

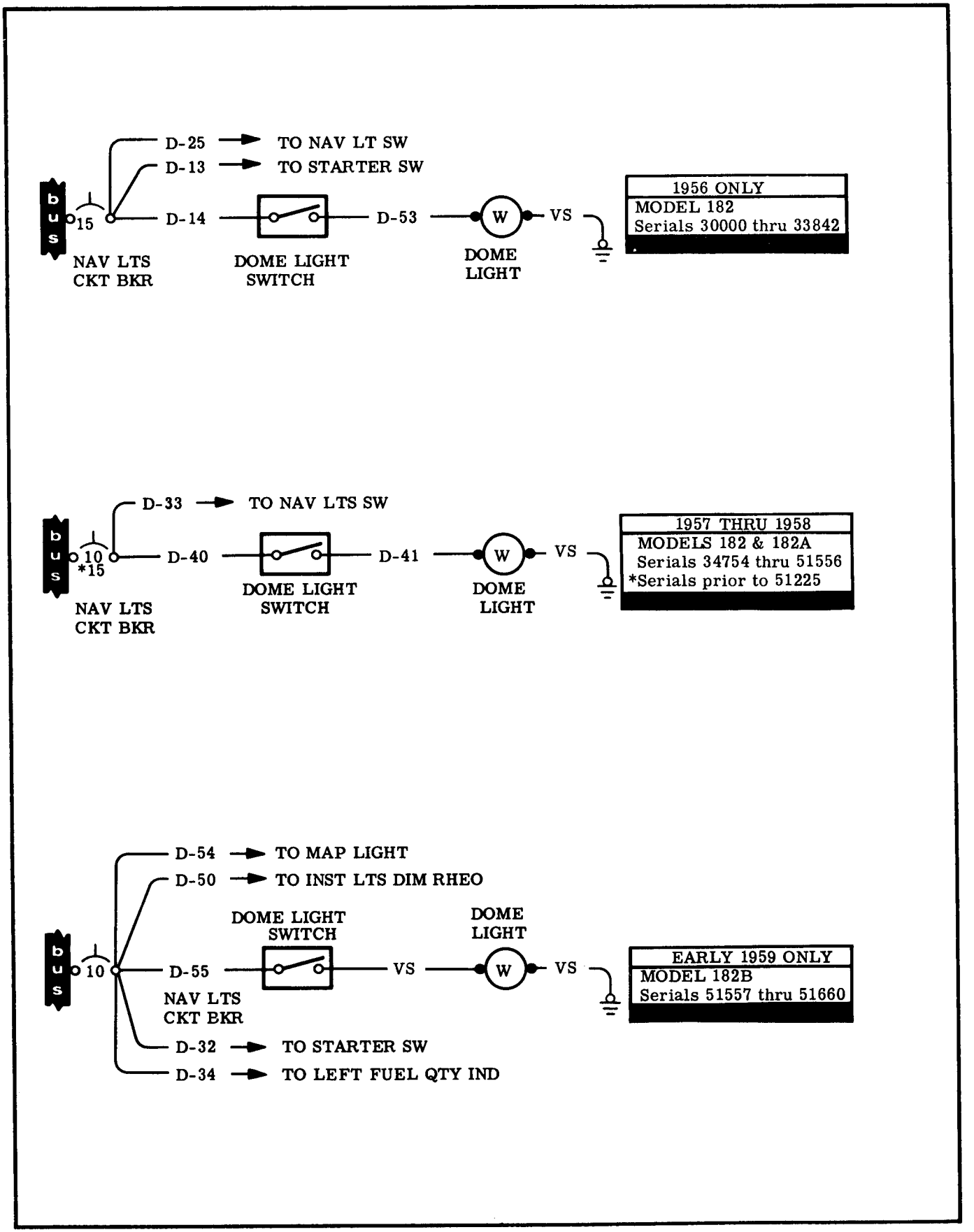

Figure 17-78. Dome Light Circuits - Model 182 (Sheet 1 of 2)

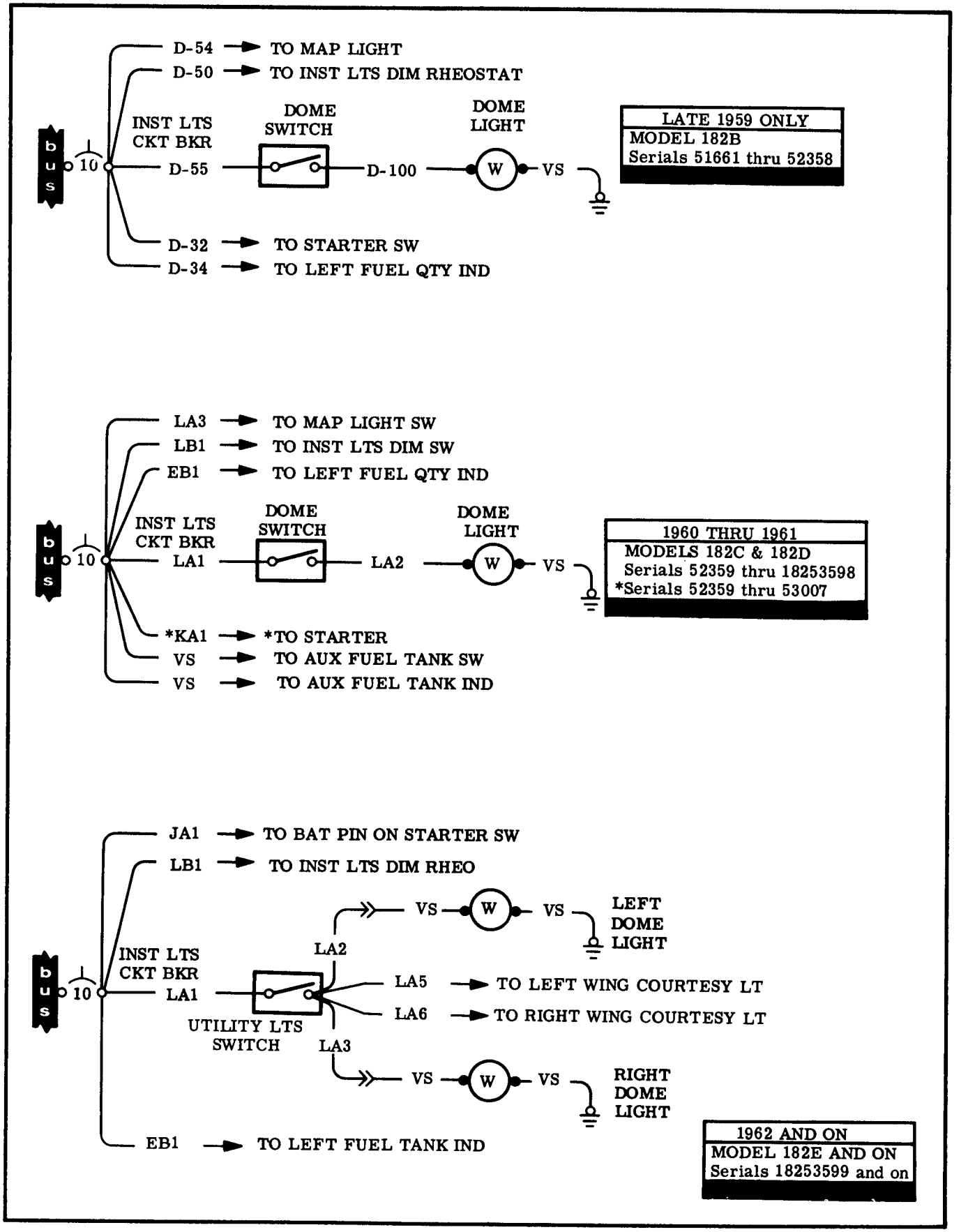

Figure 17-78. Dome Light Circuits - Model 182 (Sheet 2 of 2)

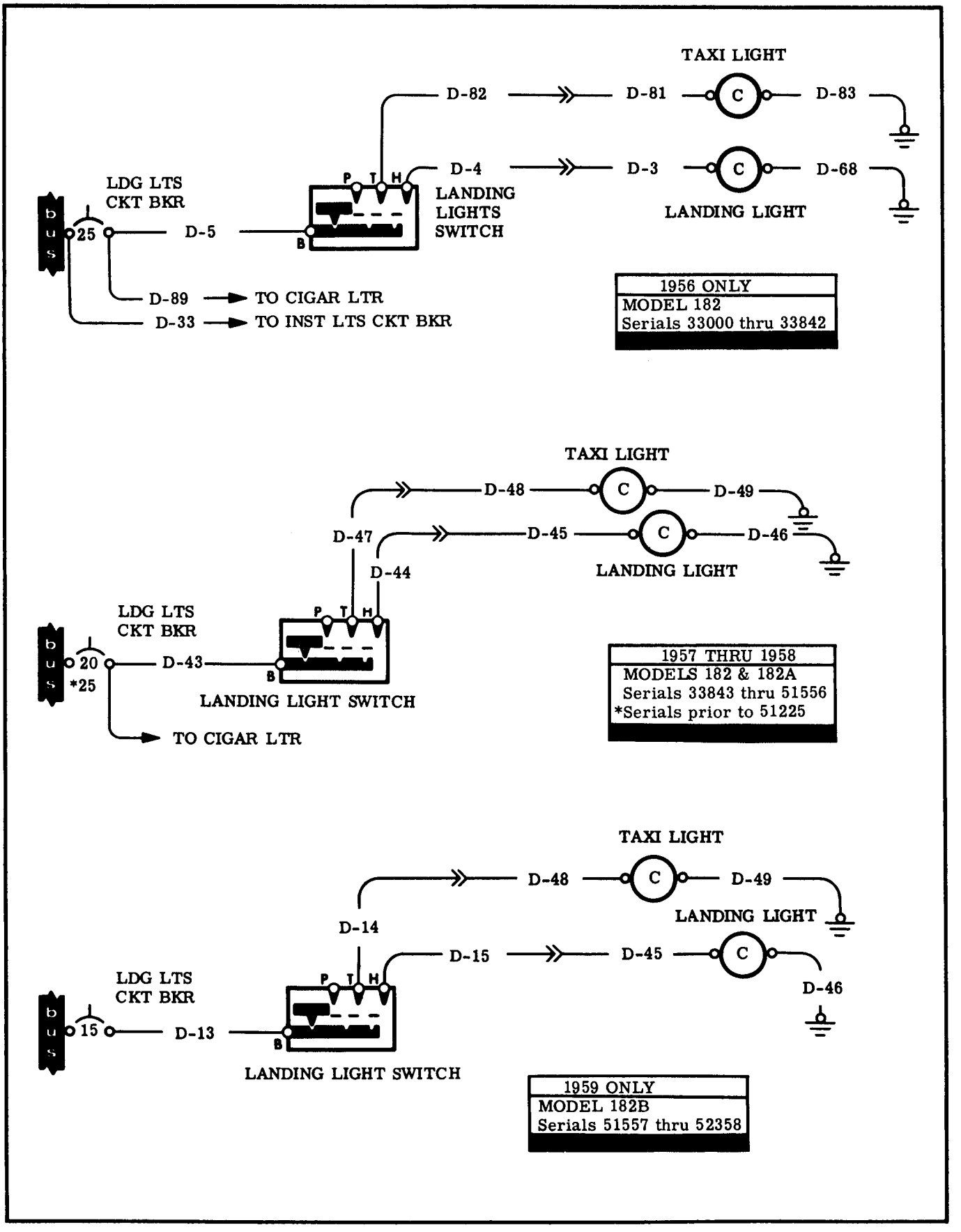

Figure 17-79. Landing and Taxi Light Circuits - Model 182 (Sheet 1 of 2)

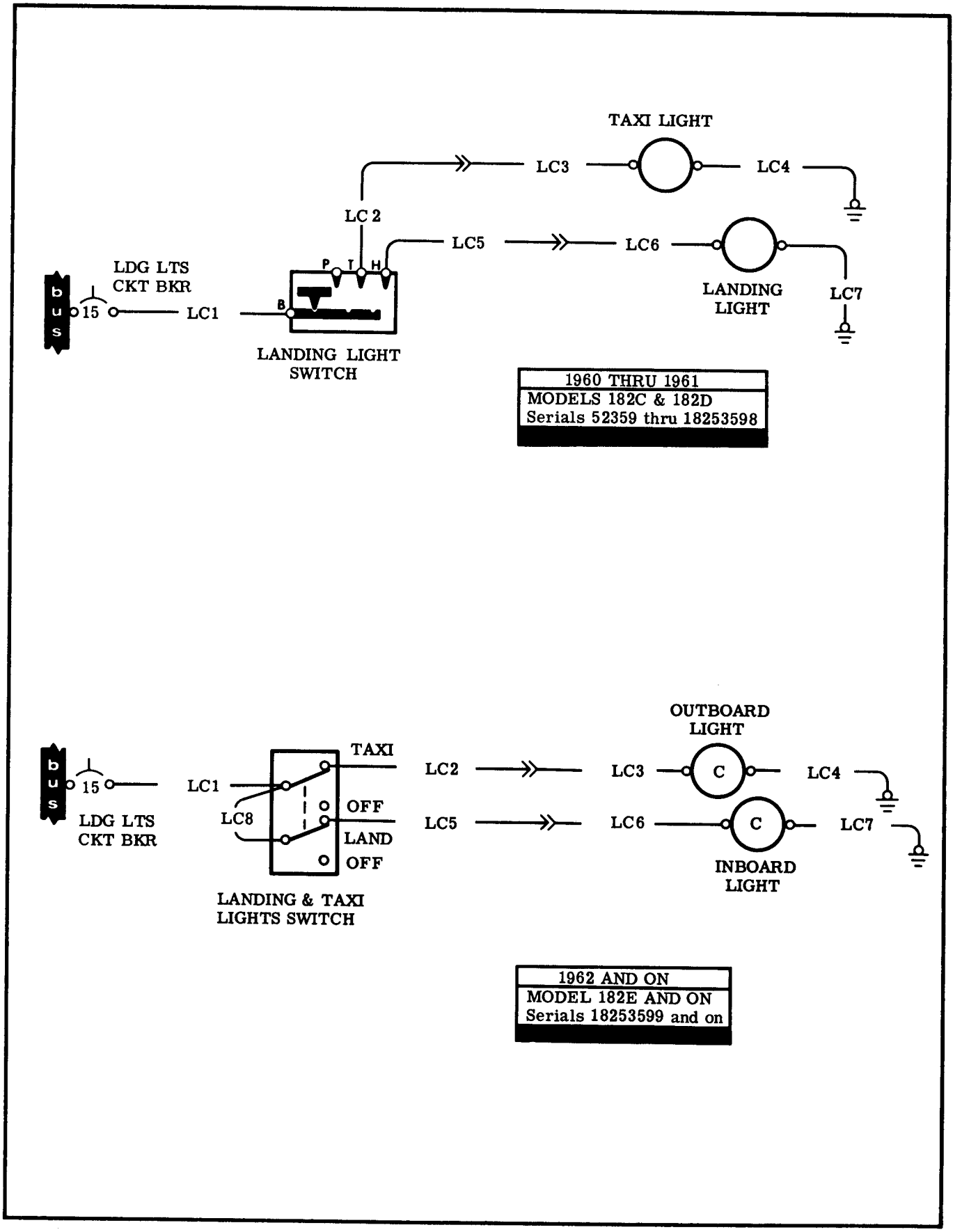

Figure 17-79. Landing and Taxi Light Circuits - Model 182 (Sheet 2 of 2)

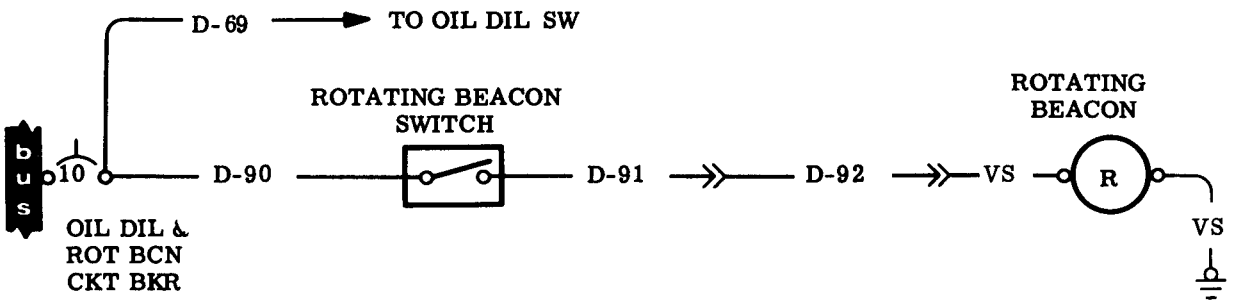

1957 THRU 1958
MODELS 182 & 182A
Serials 33843 thru 51556

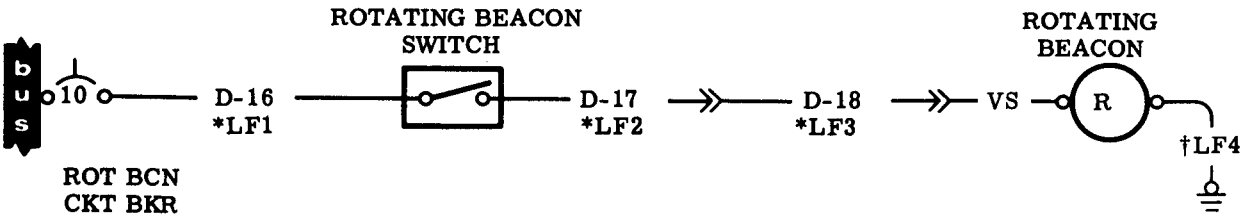

1959 AND ON
MODELS 182A AND ON
Serials 51557 thru 52358
*Serials 52359 and on
†Serials 53596 and on

Figure 17-80. Rotating Beacon Circuits - Model 182

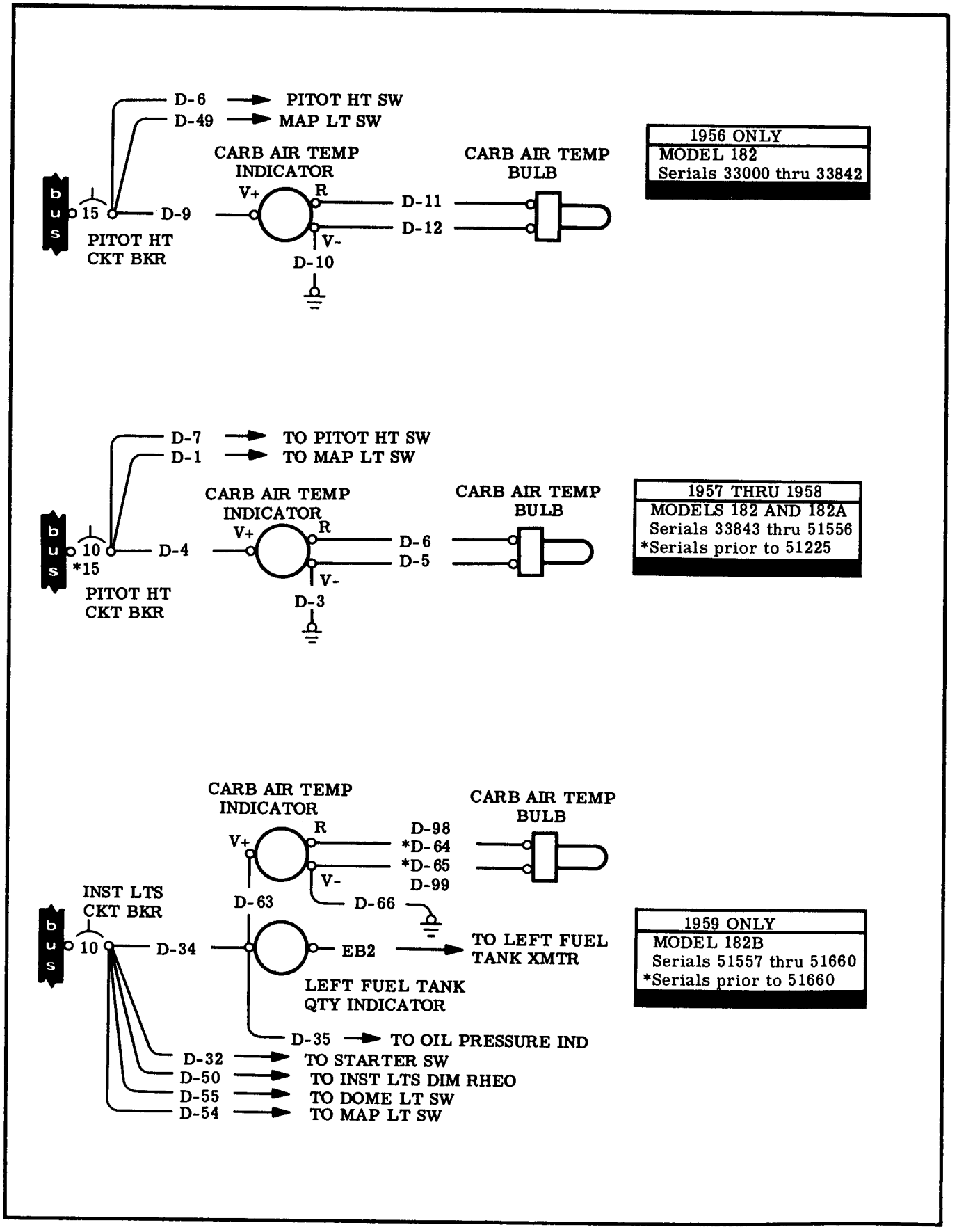

Figure 17-81. Carburetor Air Temperature Indicator Circuits - Model 182 (Sheet 1 of 3)

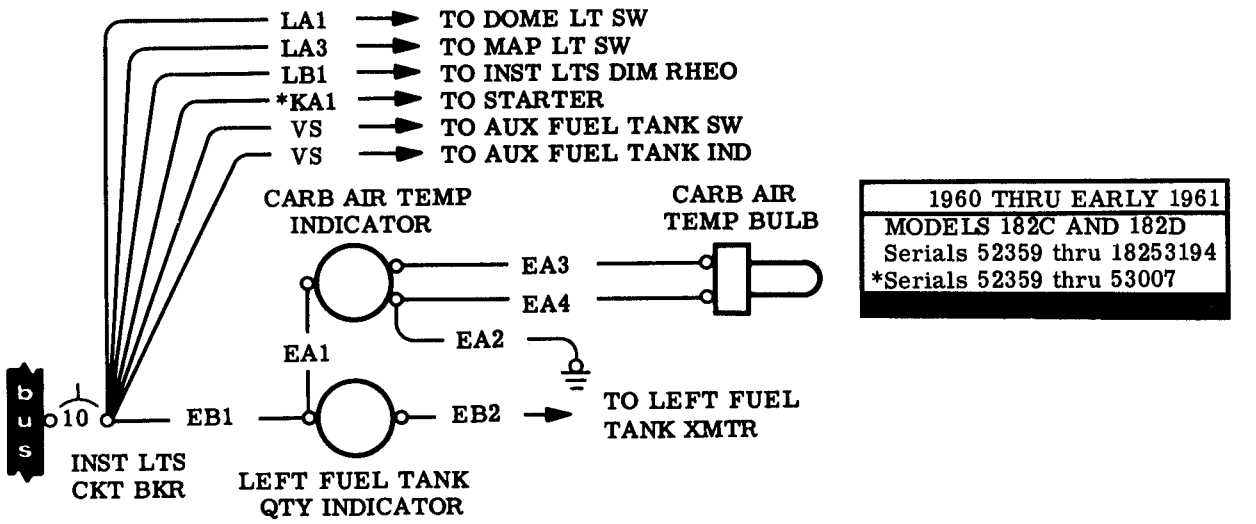

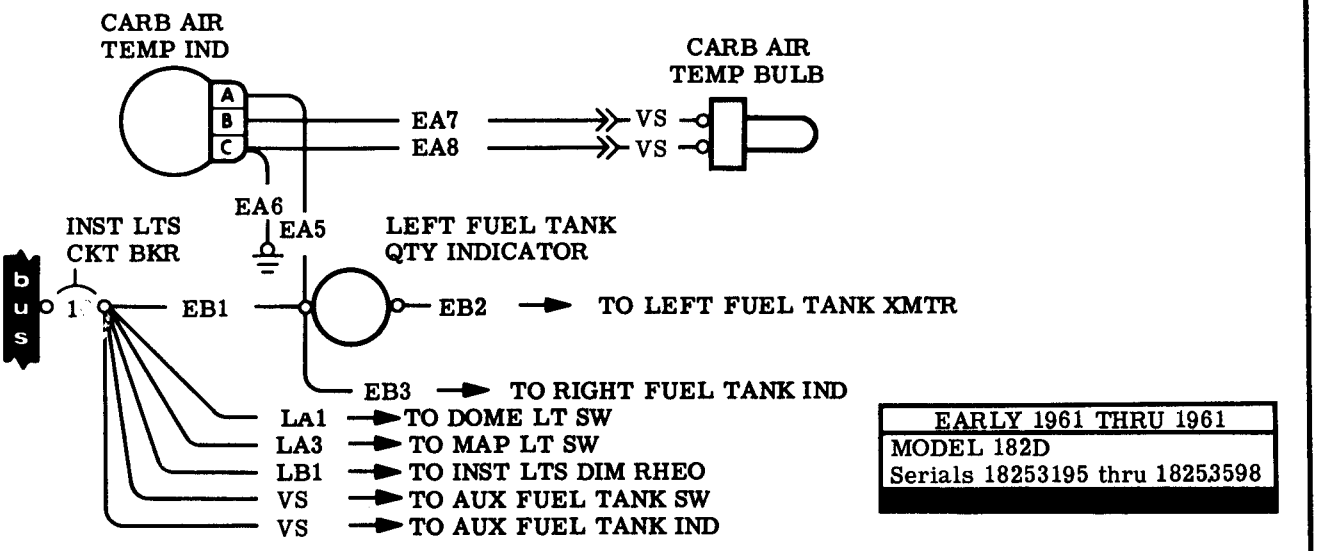

Figure 17-81. Carburetor Air Temperature Indicator Circuits - Model 182 (Sheet 2 of 3)

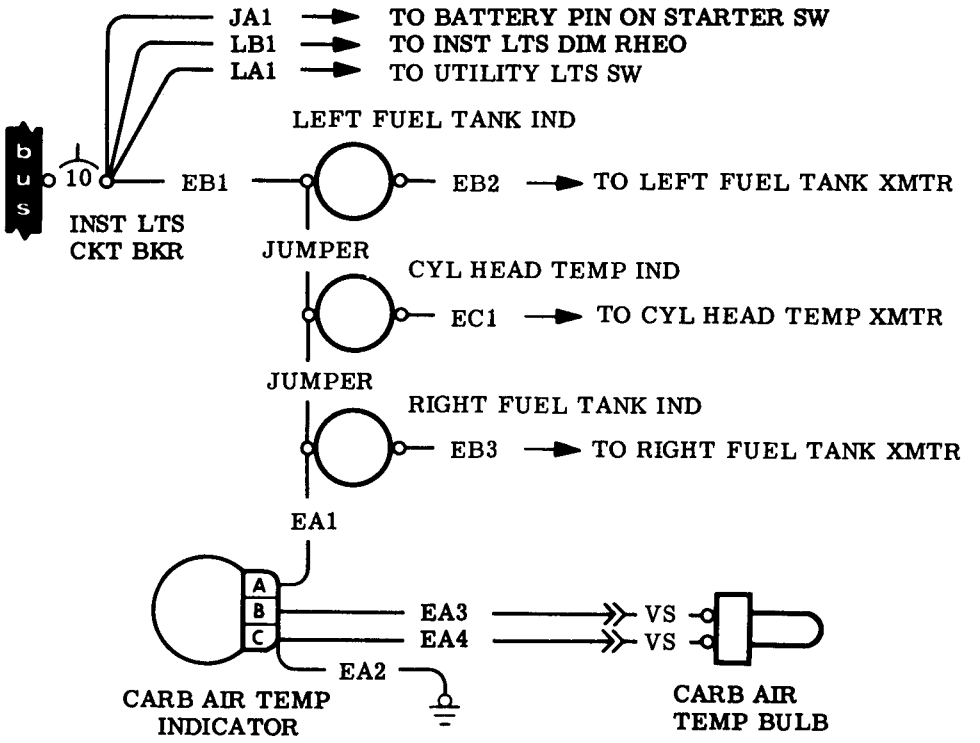

1962 AND ON
MODEL 182E AND ON
Serials 18253599 and on

Figure 17-81. Carburetor Air Temperature Indicator Circuits - Model 182 (Sheet 3 of 3)

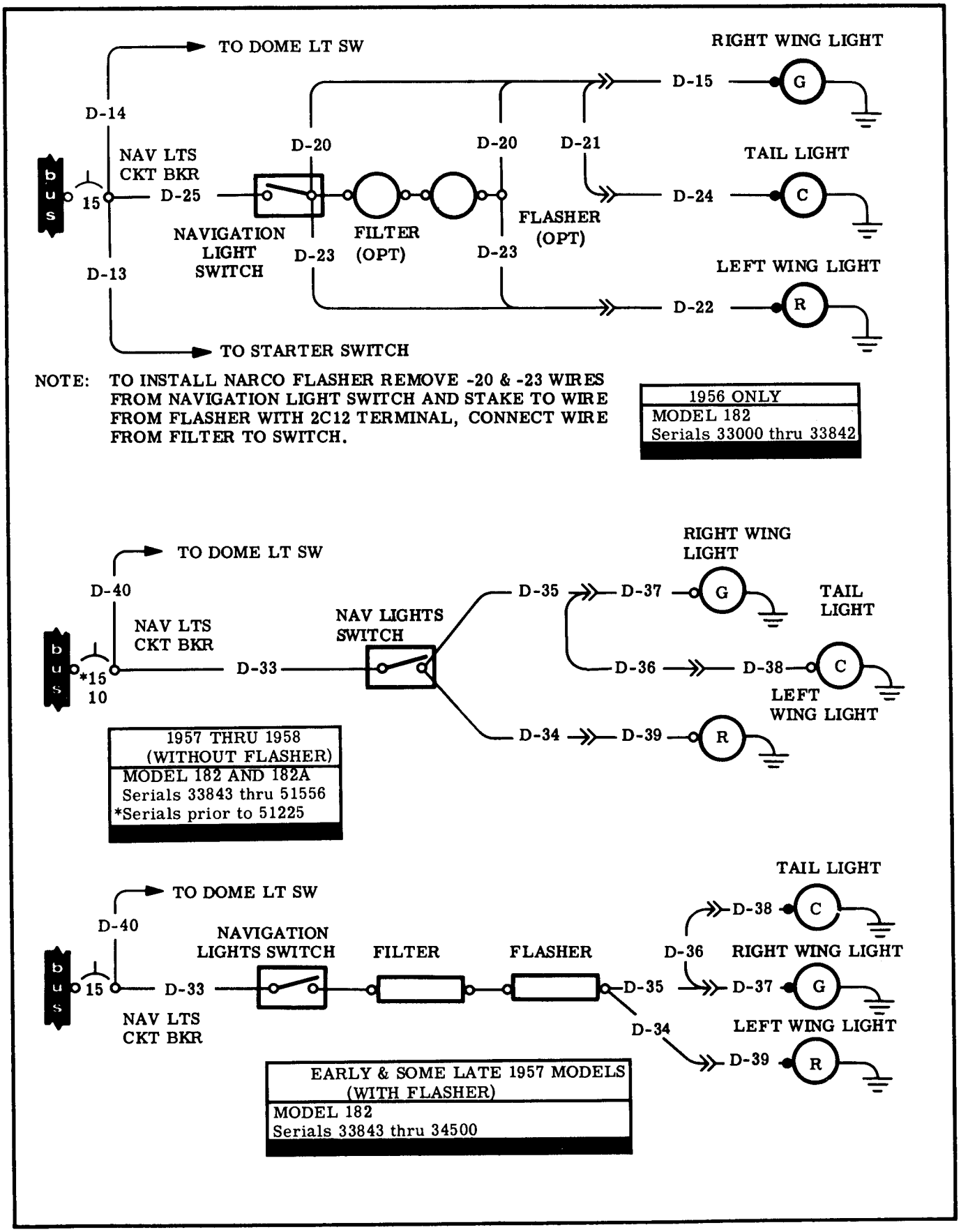

Figure 17-82. Navigation Lights Circuits - Model 182 (Sheet 1 of 4)

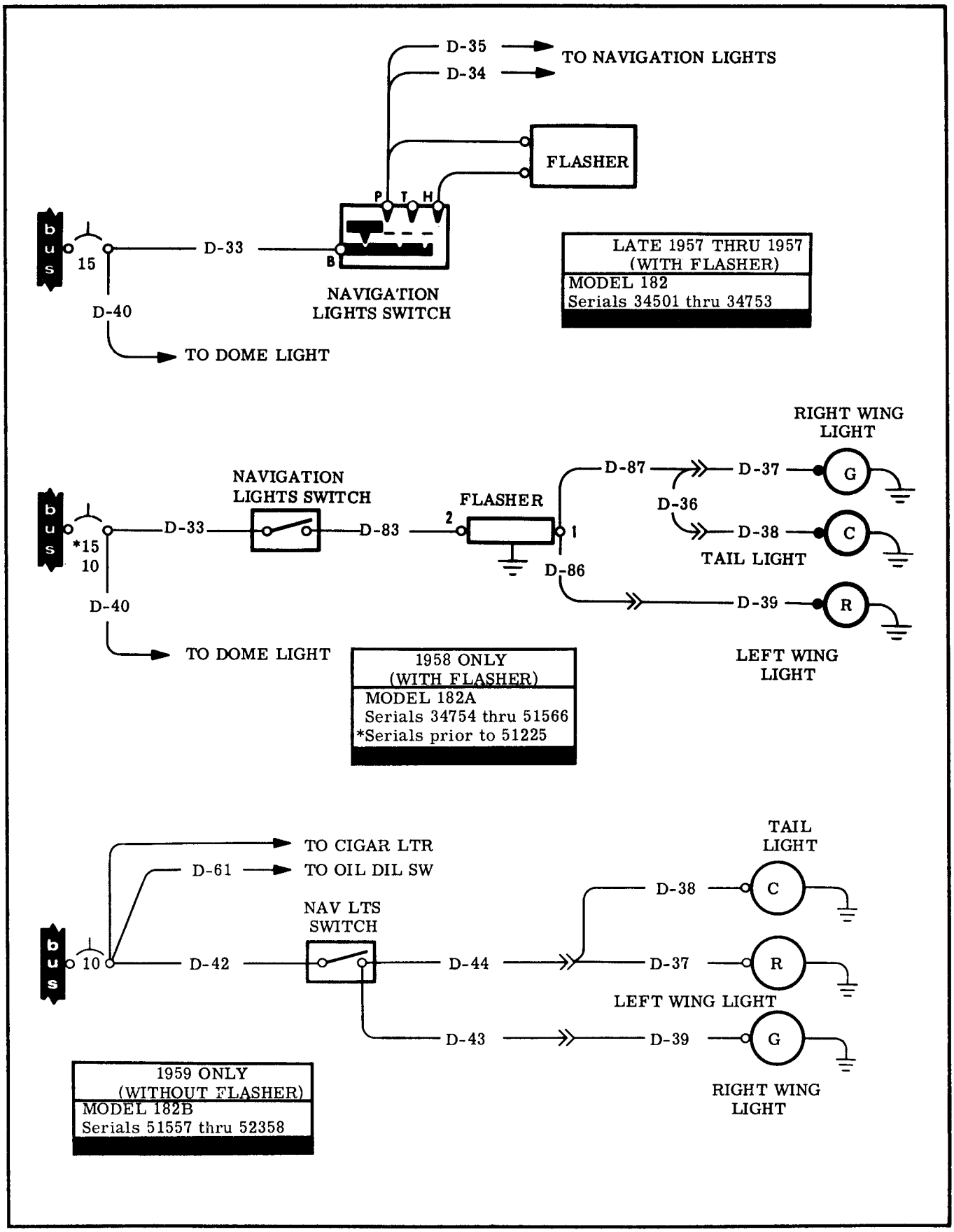

Figure 17-82. Navigation Lights Circuits - Model 182 (Sheet 2 of 4)

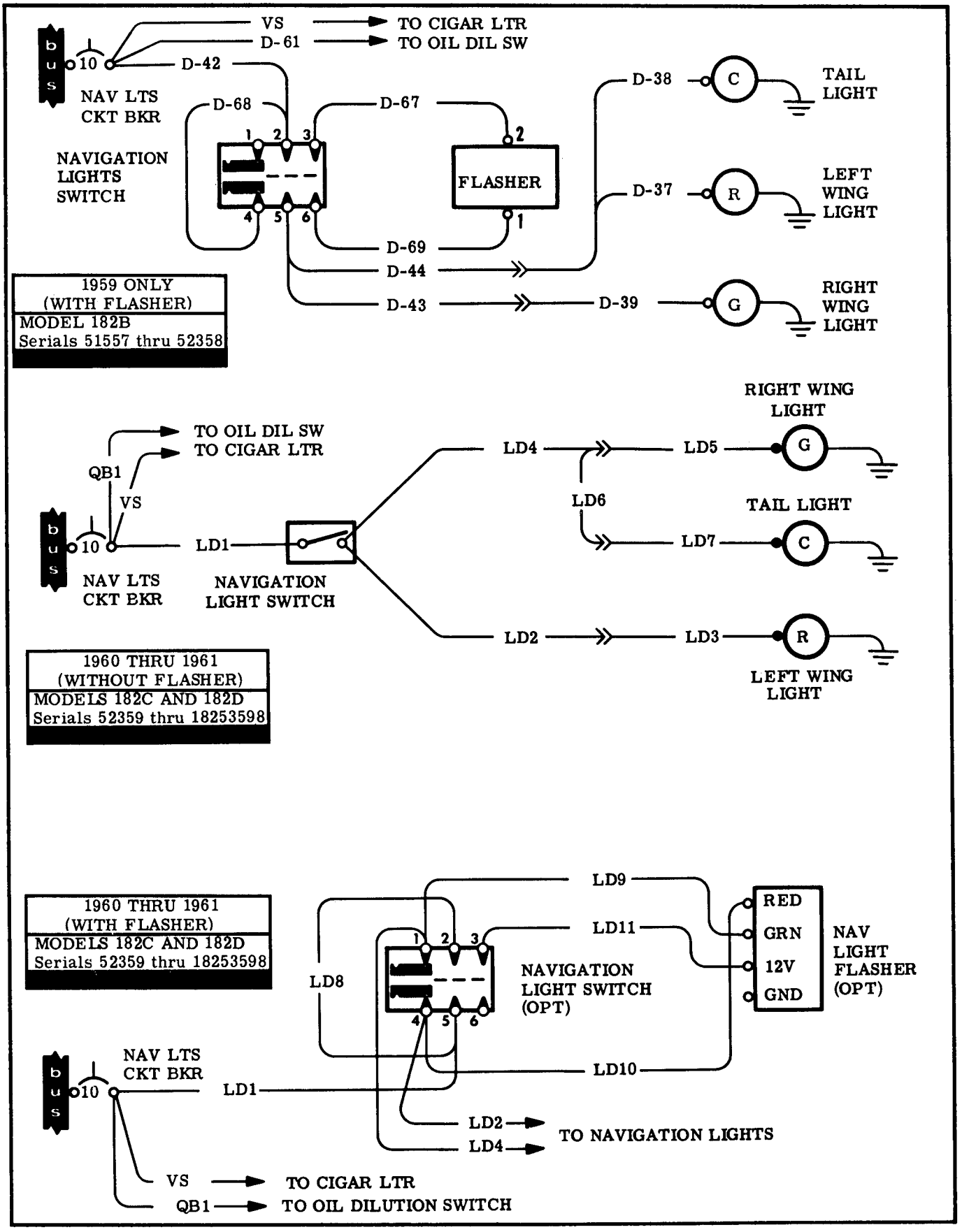

Figure 17-82. Navigation Lights Circuits - Model 182 (Sheet 3 of 4)

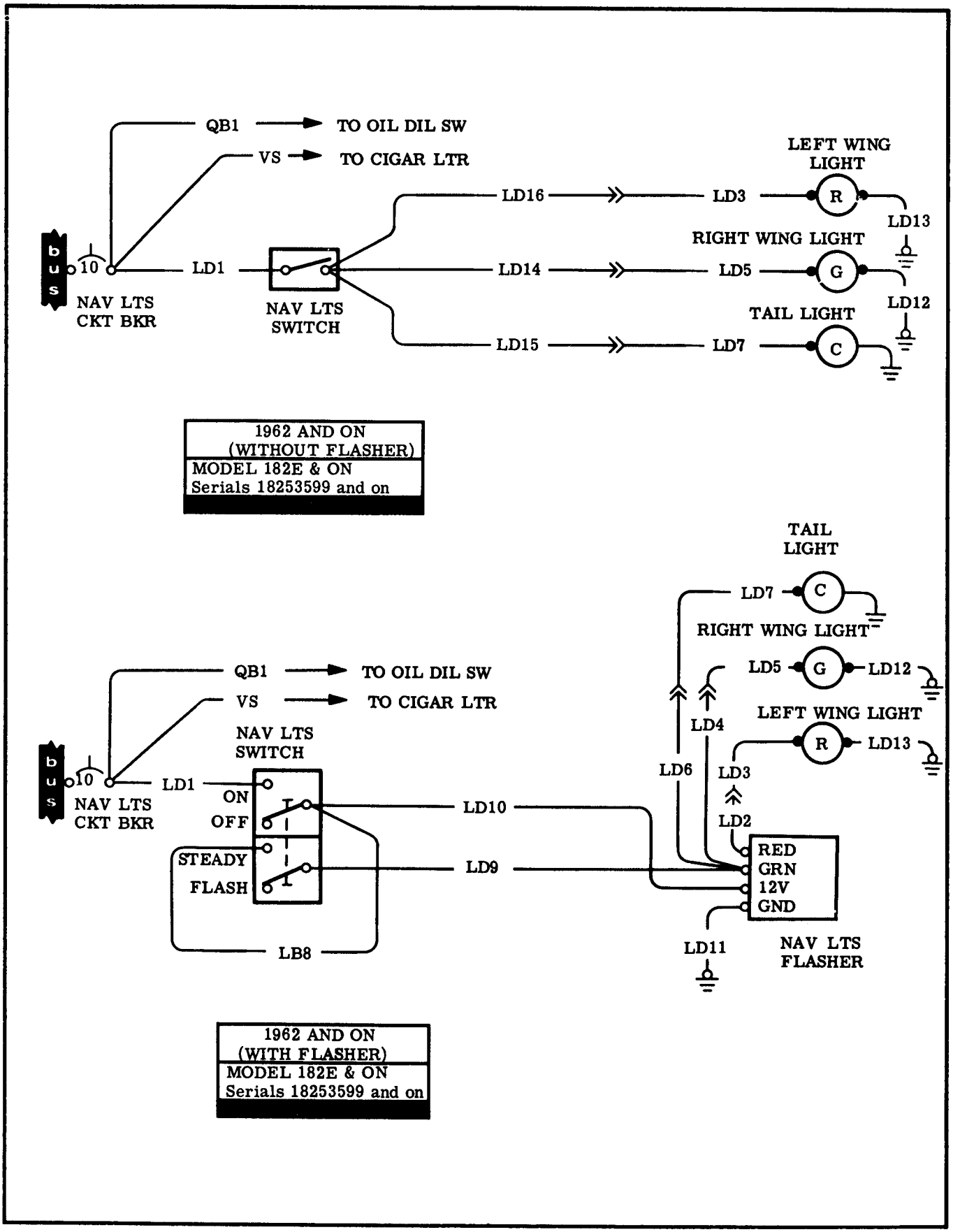

Figure 17-82. Navigation Lights Circuits - Model 182 (Sheet 4 of 4)

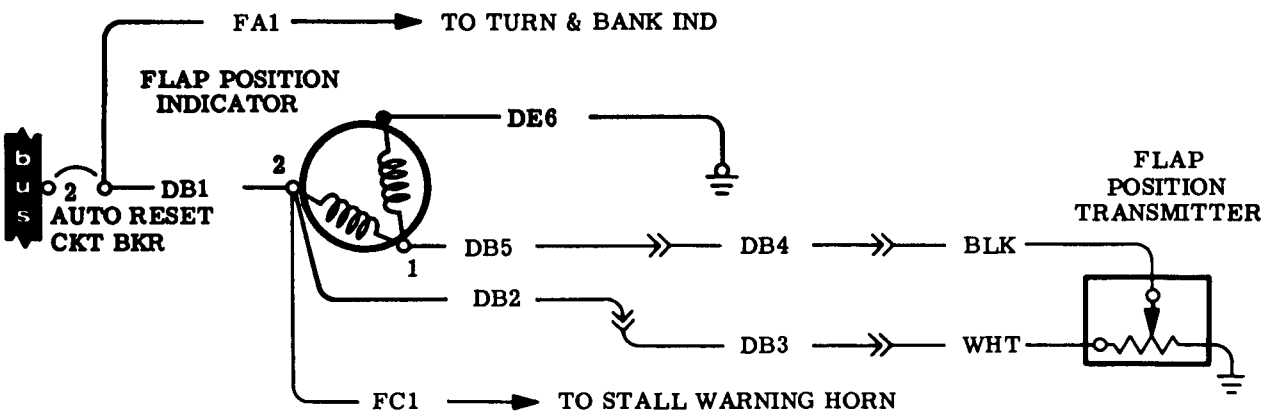

1962 AND ON
MODEL 182E Serials 18253599 and on

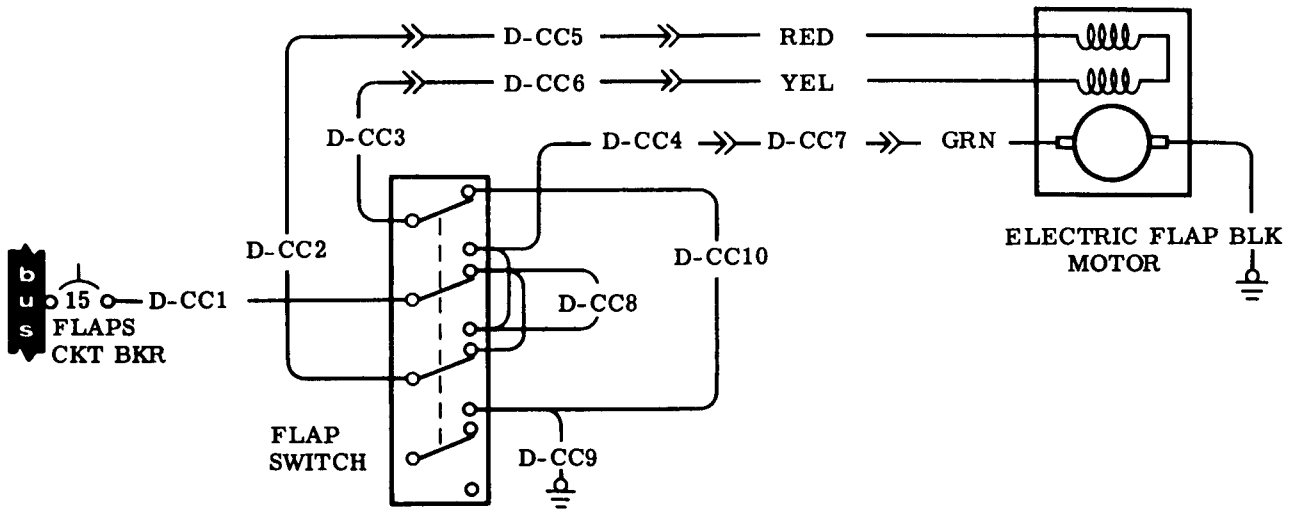

NOTE: FLAP SWITCH WIRING SHOWN IN FLAP "UP" POSITION.
(COUNTER CLOCKWISE MOTOR ROTATION)

1962 AND ON
MODEL 182E Serials 18253599 and on

Figure 17-83. Electric Flaps Circuits - Model 182

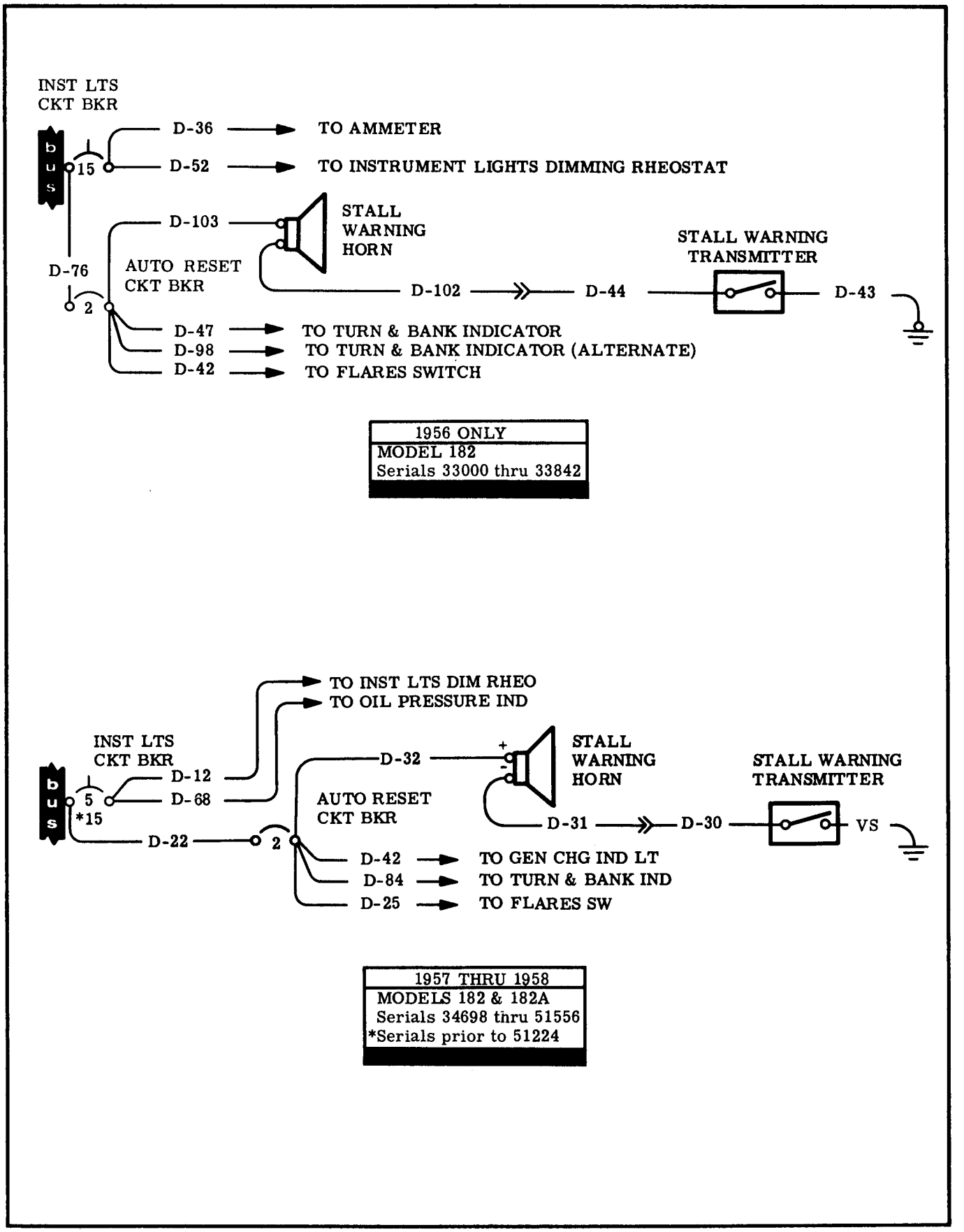

Figure 17-84. Stall Warning Circuits - Model 182 (Sheet 1 of 2)

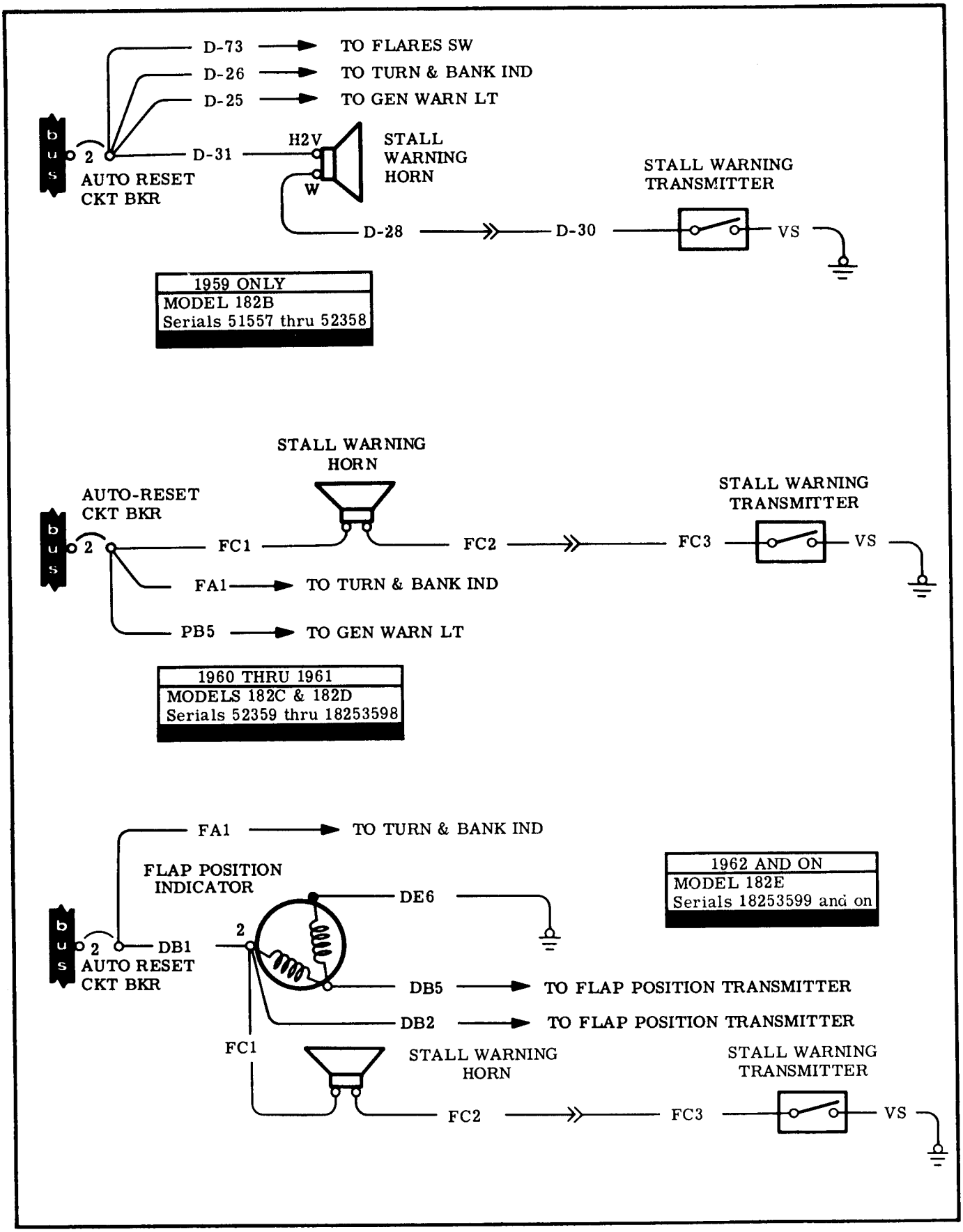

Figure 17-84. Stall Warning Circuits - Model 182 (Sheet 2 of 2)

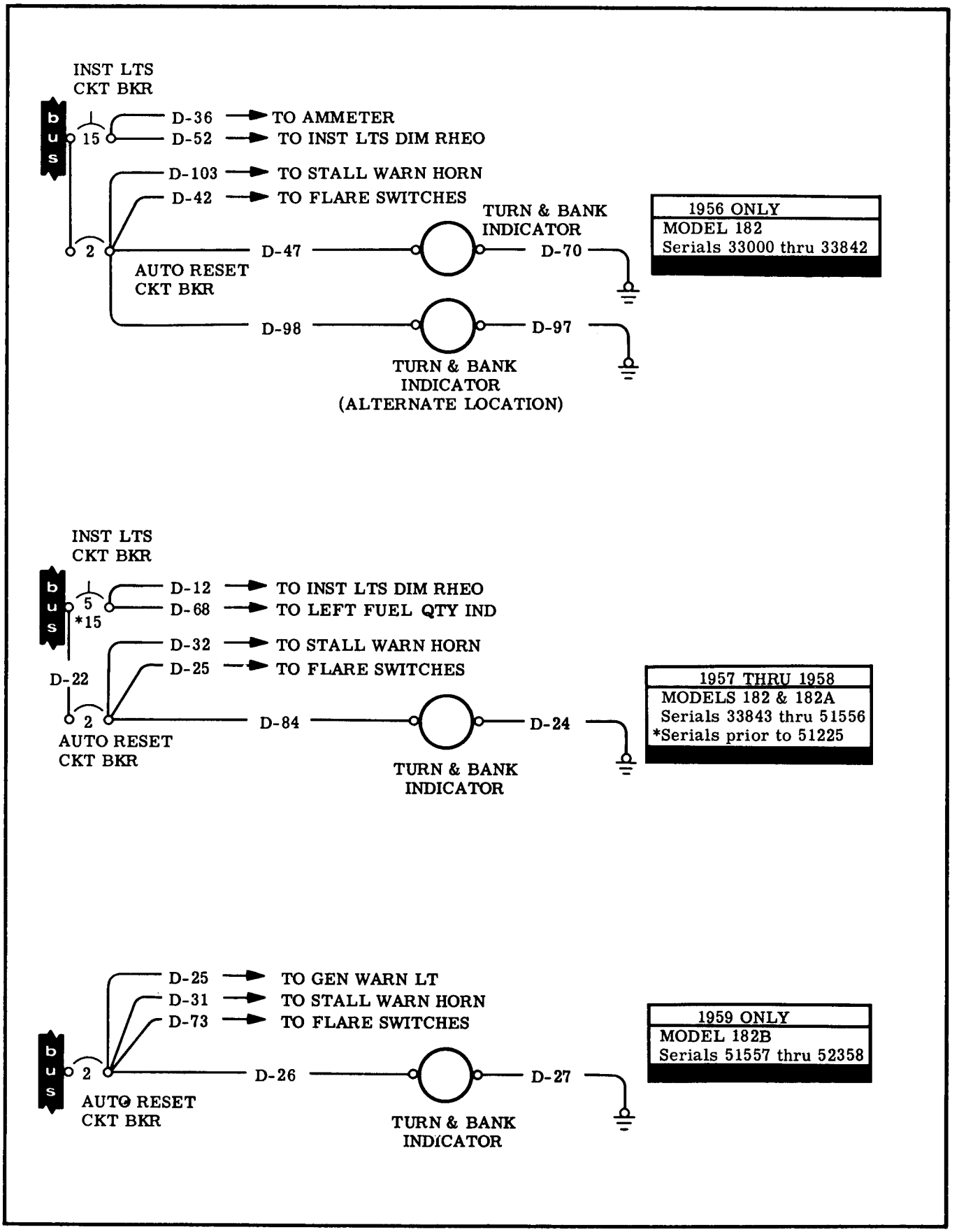

Figure 17-85. Turn and Bank Indicator Circuits - Model 182 (Sheet 1 of 2)

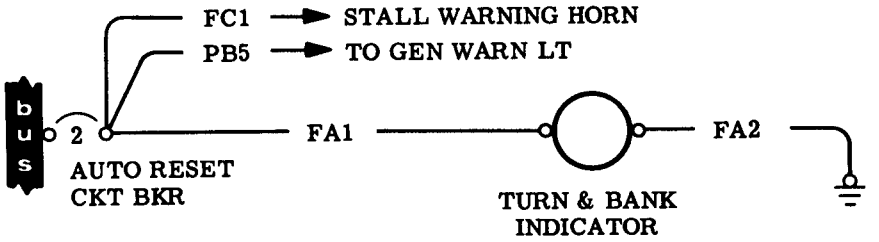

1960 THRU 1961
MODELS 182C & 182D Serials 52359 thru 18253598

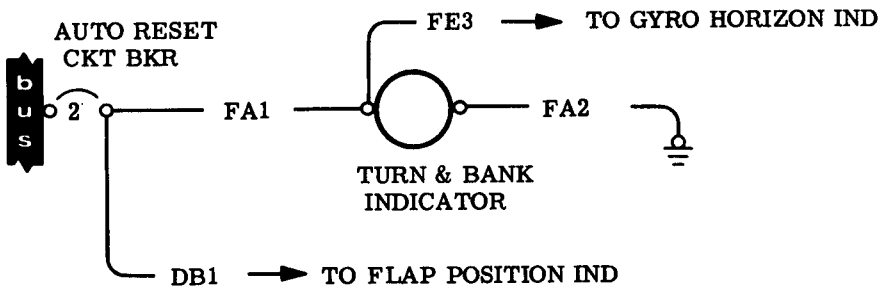

1962 AND ON
MODEL 182E AND ON Serials 18253599 and on

Figure 17-85. Turn and Bank Indicator Circuits - Model 182 (Sheet 2 of 2)

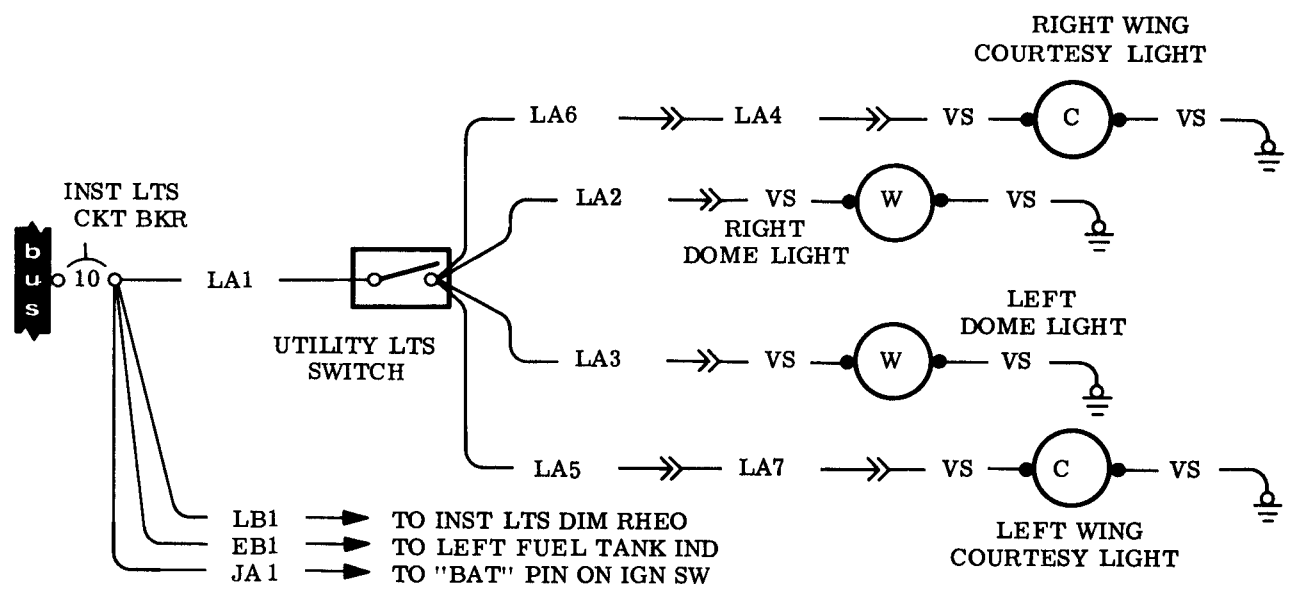

1962 AND ON
MODEL 182E Serials 18253599 and on

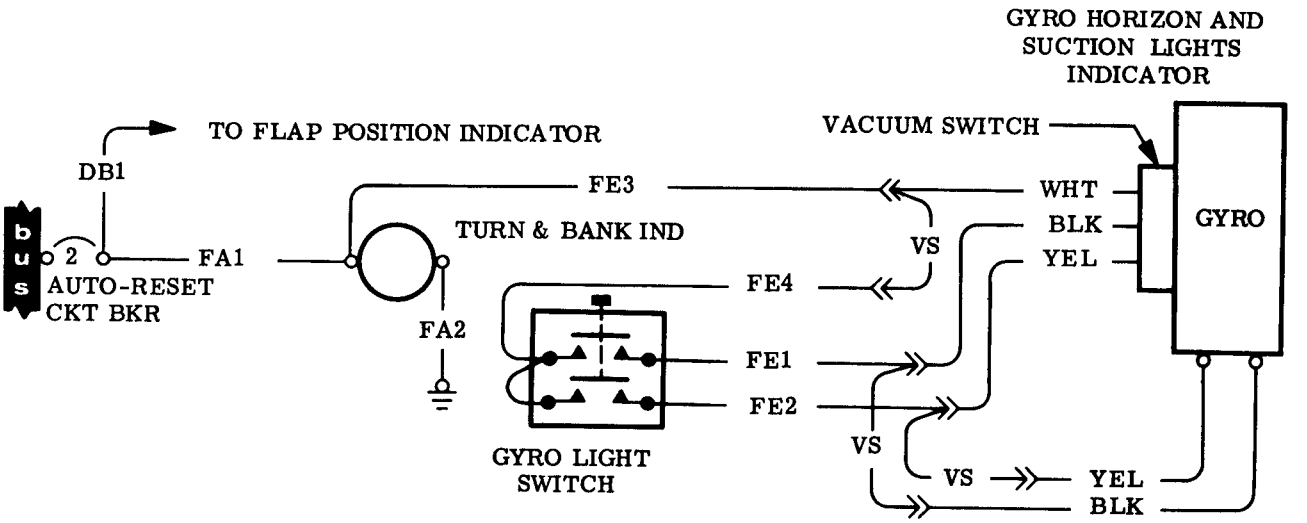

1962 AND ON
MODEL 182E & ON Serials 18253599 and on

Figure 17-86. Courtesy Lights and Gyro Horizon Indicator Circuits - Model 182

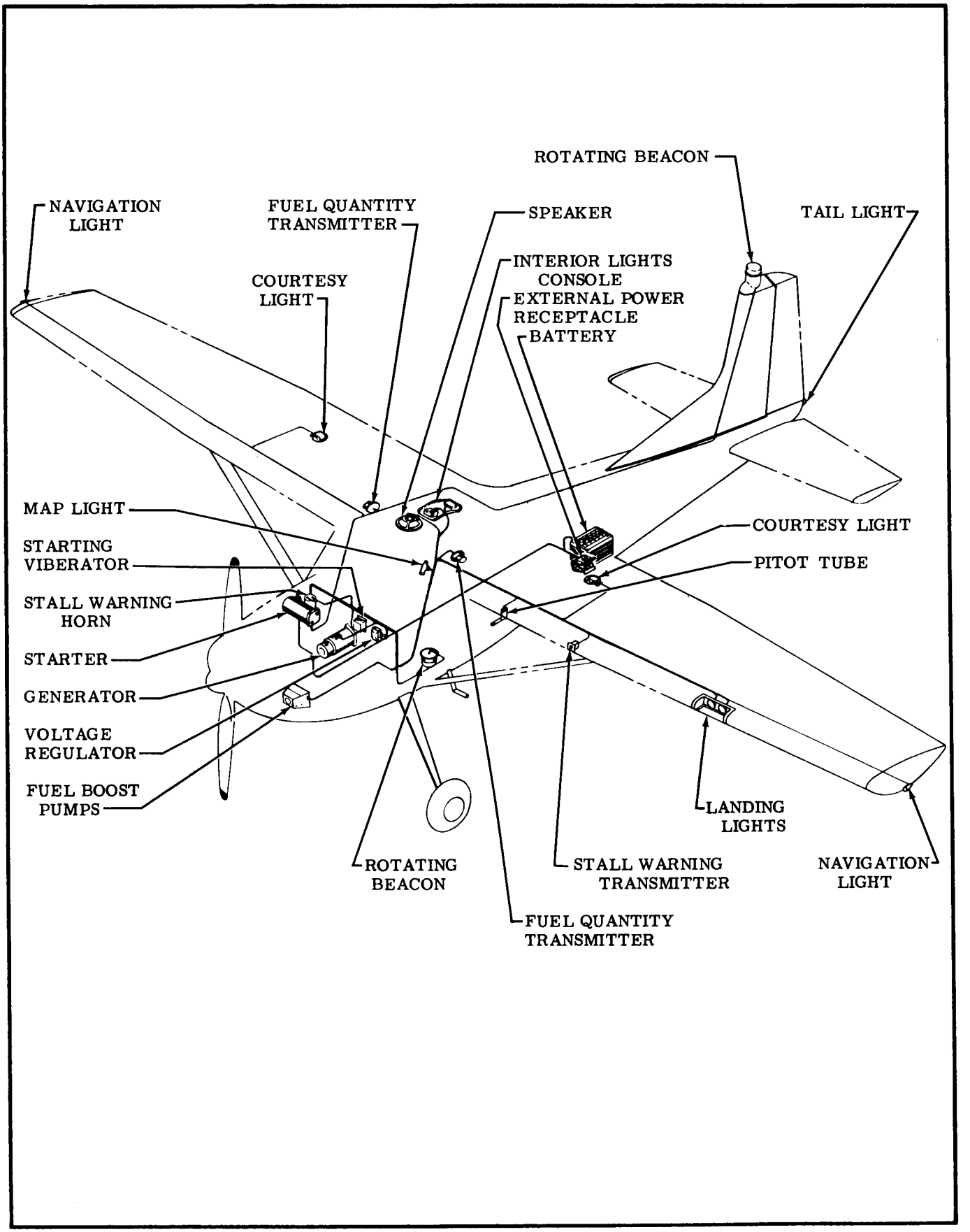

Figure 17-87. Electrical Equipment Installation - Model 185

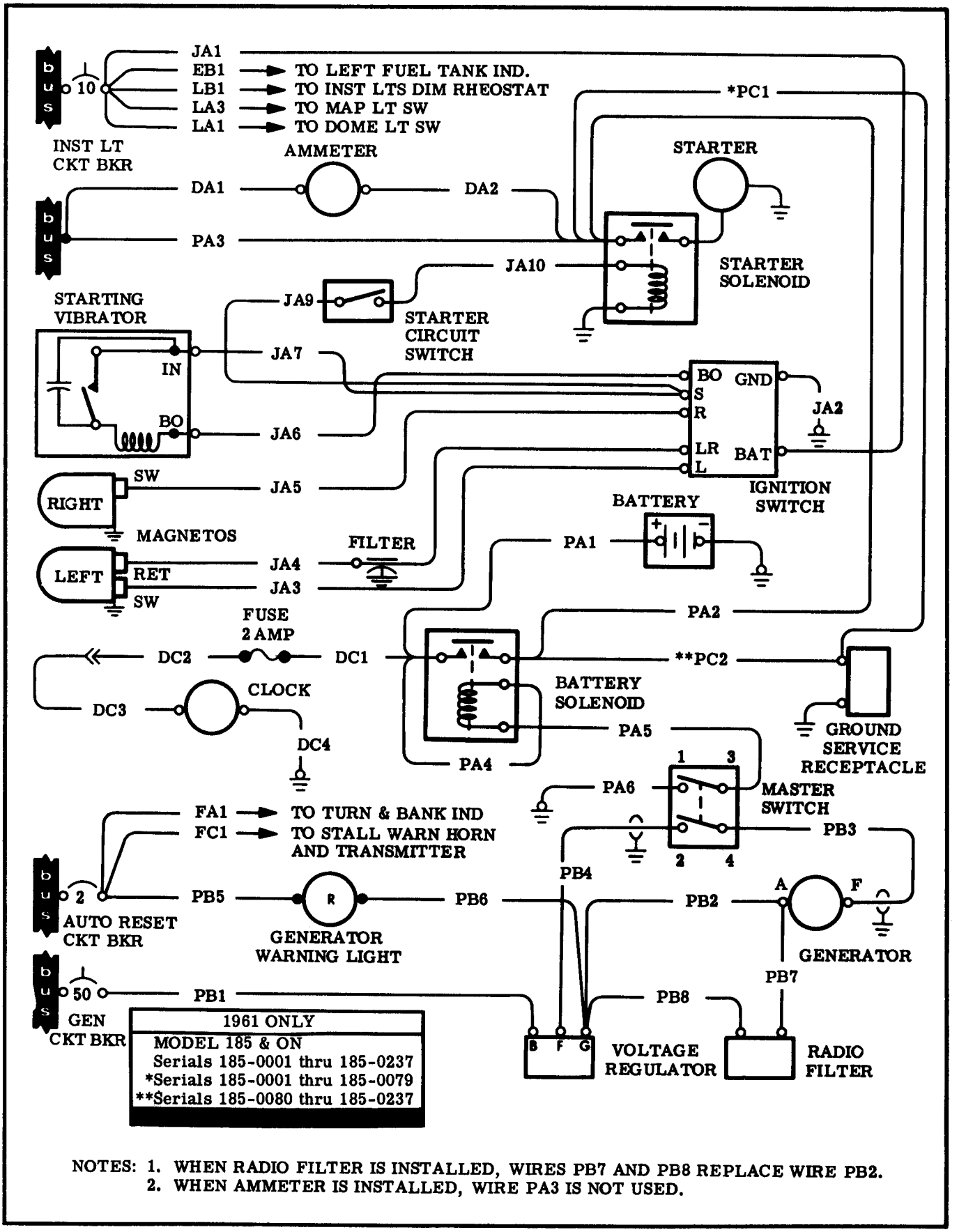

NOTES: 1. WHEN RADIO FILTER IS INSTALLED, WIRES PB7 AND PB8 REPLACE WIRE PB2.
2. WHEN AMMETER IS INSTALLED, WIRE PA3 IS NOT USED.

Figure 17-88. Bat., Gnd. Ser. Recpt., Gen., Vol. Reg., Str., Mag. and Clock Ckts. - Model 185 (Sheet 1 of 2)

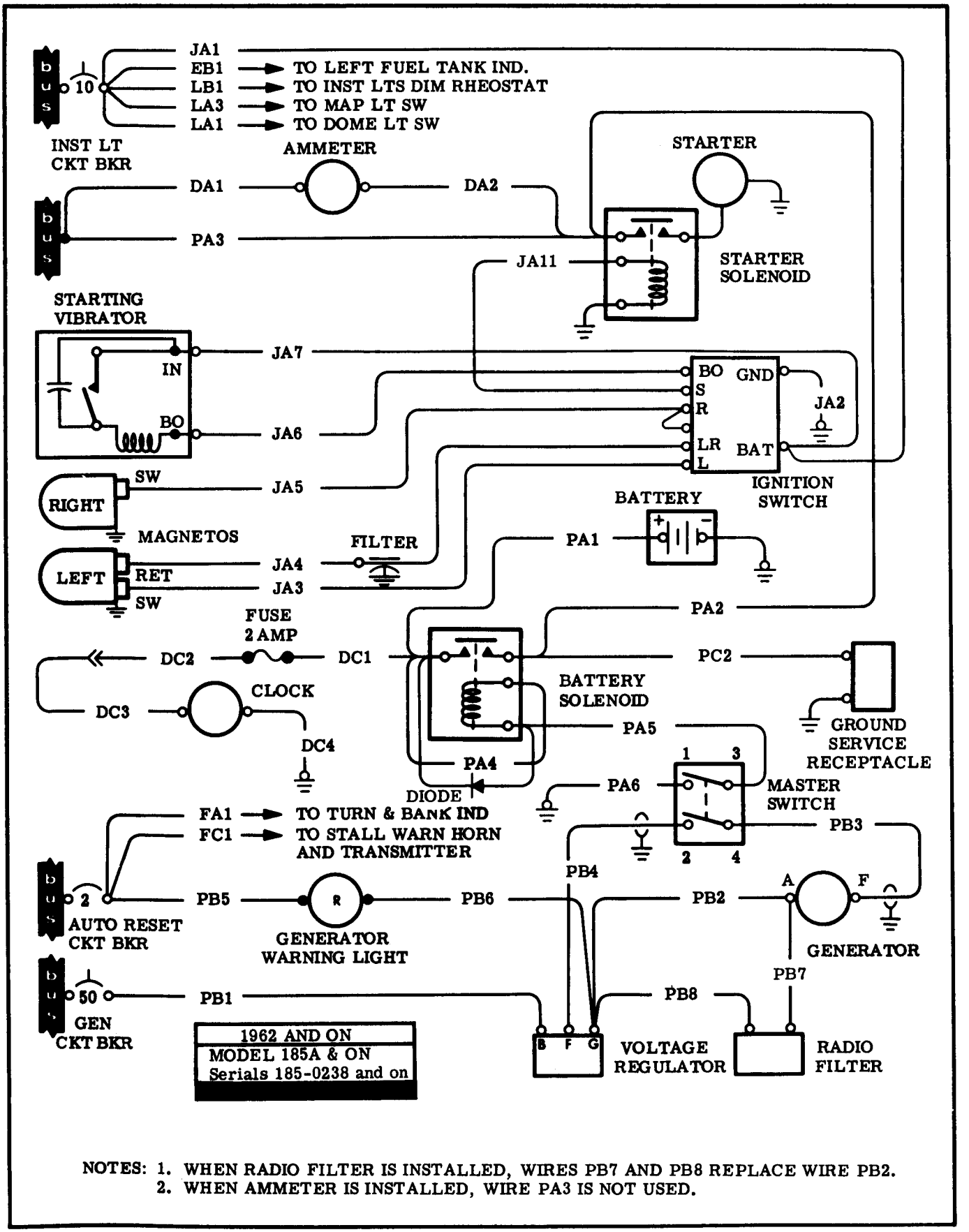

NOTES: 1. WHEN RADIO FILTER IS INSTALLED, WIRES PB7 AND PB8 REPLACE WIRE PB2.
2. WHEN AMMETER IS INSTALLED, WIRE PA3 IS NOT USED.

Figure 17-88. Bat., Gnd. Ser. Recpt., Gen., Vol. Reg., Str., Mag. and Clock Ckts. - Model 185 (Sheet 2 of 2)

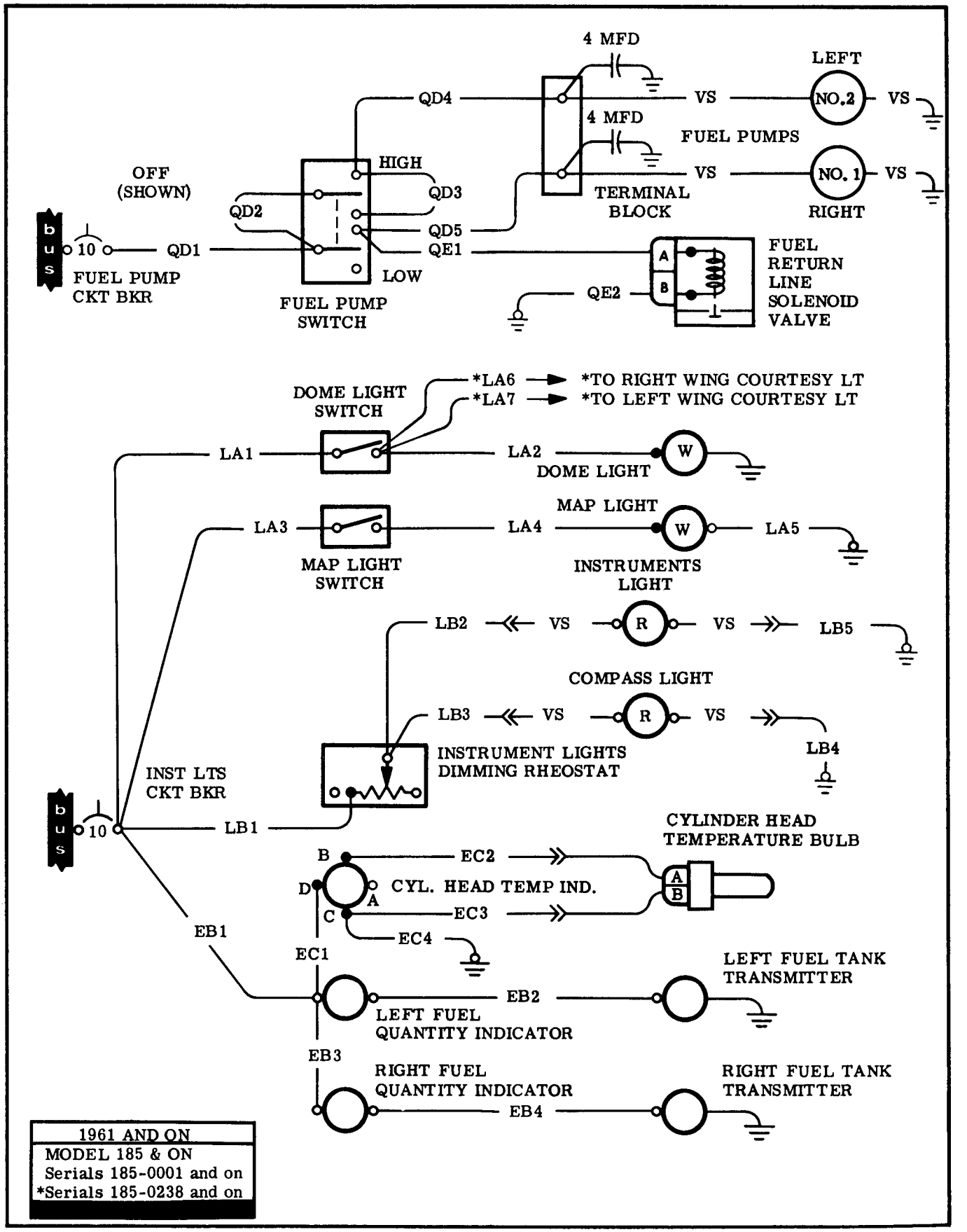

Figure 17-89. Aux. Fuel Pumps, Interior Lts., Cyl. Head Temp and Fuel Ind. Ckts. - Model 185

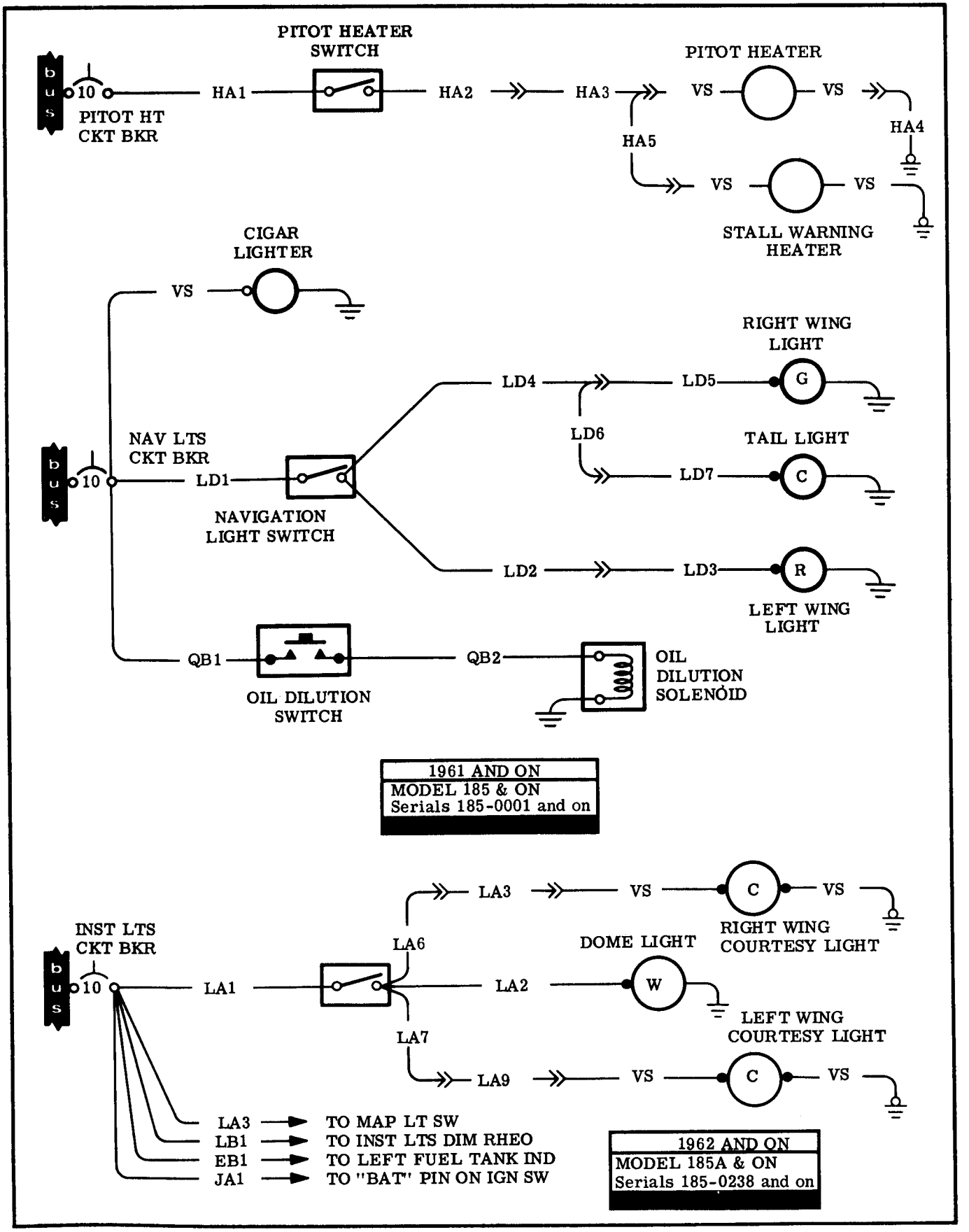

Figure 17-90. Pitot & Stall Warn. Htr., Cigar Ltr., Nav. Lts., Courtesy Lts. & Oil Dil. Ckts. - Model 185

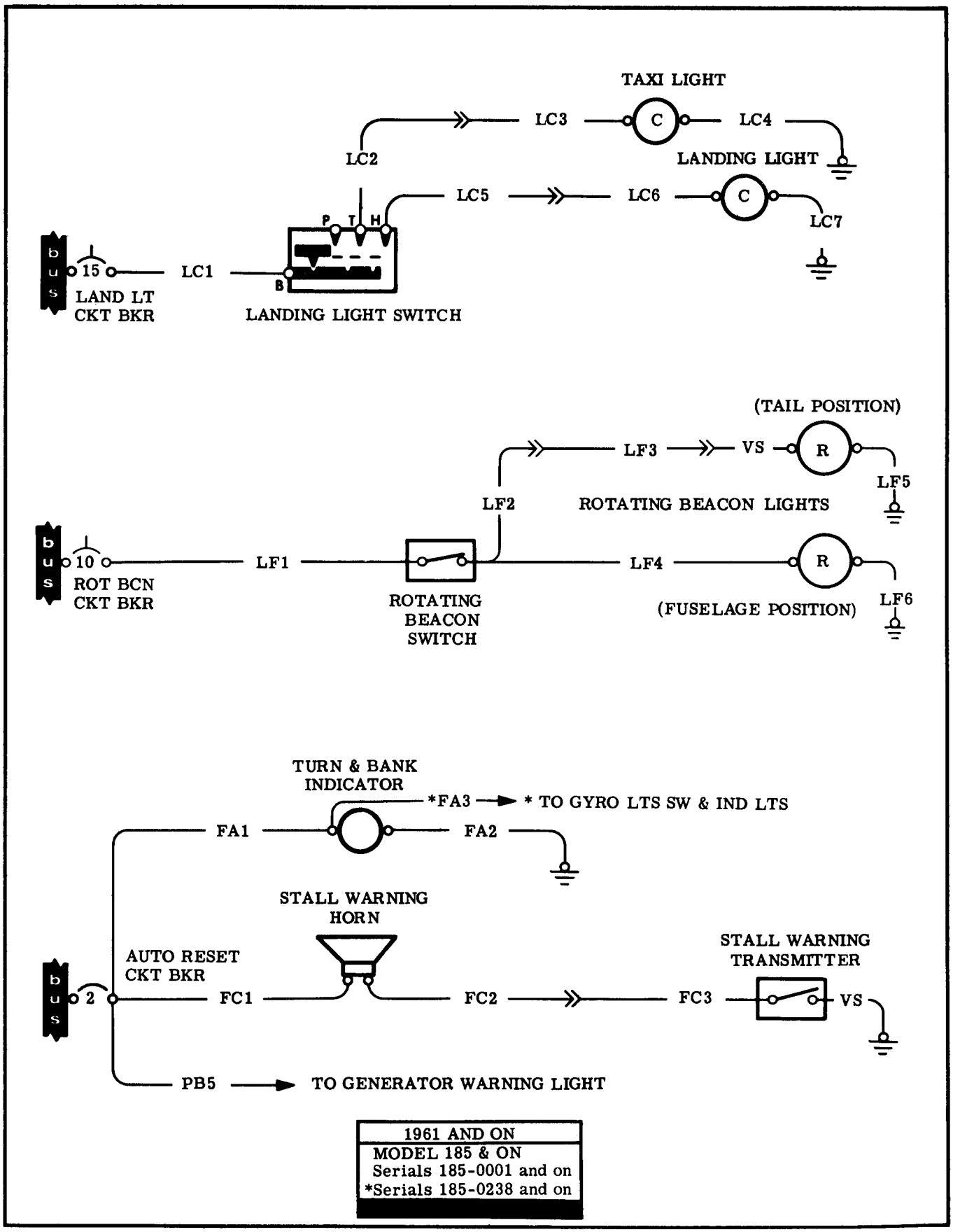

Figure 17-91. Ldg. Lts., Rot. Bcn., Turn & Bank and Stall Warn. Xmtr. Circuits - Model 185

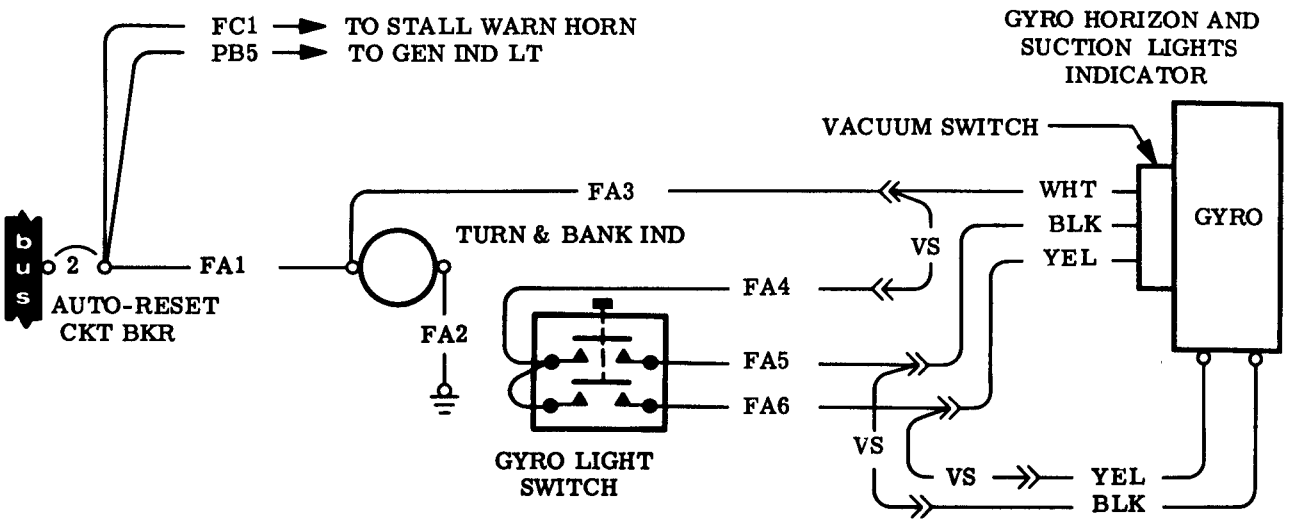

1962 AND ON
MODEL 185A & ON
Serials 185-0238 and on

Figure 17-92. Gyro Horizon Indicator Circuits - Model 185

This page intentionally left blank.

SECTION 18

ELECTRONIC SYSTEMS

This section has been deleted from this book. The information formerly contained in this section may be found in the "Cessna Electronics Manual and Parts Catalog."

This page intentionally left blank.

SECTION 19

STRUCTURAL REPAIR

TABLE OF CONTENTS Page

REPAIR CRITERIA 19-1
EQUIPMENT AND TOOLS 19-1
Control Balancing Fixtures 19-1
Support Stands 19-1
Fuselage Repair Jig 19-1
Wing Jig 19-2
SKIN REPAIR MATERIALS 19-7
WING 19-8
Access Openings 19-8
WING SKIN 19-8
Negligible Damage 19-8
Damage Repairable by Patching 19-8
Damage Repairable by Insertion 19-8
Damage Necessitating Replacement of Parts 19-8
WING RIBS 19-8
Negligible Damage 19-8
Repairable Damage 19-8
Damage Necessitating Replacement of Parts. 19-8
WING SPARS. 19-8
Repair of Wing Spars 19-8
AILERONS. 19-8
Repair 19-8
FLAPS 19-24
Repair 19-24
TAIL GROUP. 19-26
VERTICAL FIN AND DORSAL AREA 19-26
Negligible Damage. 19-26
Repairable Damage 19-26
Damage Necessitating Replacement of Parts. 19-26
STABILIZER. 19-26
Negligible Damage 19-26
Repairable Damage 19-26
ELEVATORS AND RUDDER 19-26
Negligible Damage 19-26
Damage Necessitating Replacement of Parts. 19-26
Repair Considerations 19-27
FUSELAGE 19-27
Negligible Damage 19-27
Repairable Damage 19-27
Damage Repairable by Insertion 19-27
Damage Necessitating Replacement of Parts. 19-27
BULKHEADS. 19-27
Description 19-27
Cracked Bulkhead Webs or Flanges 19-27
Severely Damaged Channels. 19-27
Damaged Fittings 19-27
LANDING GEAR BULKHEADS 19-30
REPLACEMENT OF HI-SHEAR RIVETS. . . .19-30
FIREWALL DAMAGE 19-30
REPLACEMENT OF PORTIONS OF SKIN PANELS 19-30
ENGINE MOUNT 19-36
Description 19-36
General Considerations. 19-36
Support Cradle Damage. 19-36
Mounting Lugs and Fittings 19-36
BAFFLES 19-36
Repair Considerations 19-36
ENGINE COWLING 19-36
Repair of Cowling Skins. 19-36
Repair of Reinforcement Angles 19-36
ROYALITE REPAIRS 19-36
FIBERGLAS REPAIRS. 19-36

19-1. REPAIR CRITERIA.

19-2. Although this section outlines repair permissible on structure of the various aircraft, the decision of whether to repair or replace a major unit of structure will be influenced by such factors as time and labor available, and by a comparison of labor costs with the price of replacement assemblies. Past experience indicates that replacement, in many cases, is less costly than major repair. Certainly, when the aircraft must be restored to its airworthy condition in a limited length of time, replacement is preferable.

19-3. Restoration of a damaged aircraft to its original design strength, shape and alignment involves careful evaluation of the damage, followed by exacting workmanship in performing the repairs. This section suggests the extent of repair practicable on Cessna single-engine aircraft and supplements C.A.M. 18. Consult the factory when in doubt about a repair not specifically mentioned here.

19-4. EQUIPMENT AND TOOLS.

19-5. Equipment and tools for repair of structure may be fabricated locally for all but major repair jobs. For major repair of wings and fuselage, special jigs, available from the factory, are recommended. These jigs are precision equipment designed to ensure accurate alignment of these airframe components.

19-6. CONTROL BALANCING requires the use of a fixture to determine the static balance moment of the control surface assembly. Plans for, and the use of such a fixture are shown in figure 19-2.

19-7. SUPPORT STANDS shown in figure 19-1 are used to hold a fuselage or wing when it is removed. The stands may be manufactured locally of any suitable wood.

19-8. FUSELAGE REPAIR JIG. The fuselage jig which may be obtained from the factory is a

sturdy, versatile fixture used to hold an entire fuselage and locate the firewall, wing and landing gear attachment points. The jig is ideal for assembling new parts in repair of a badly damaged fuselage.

19-9. WING JIG. The wing jig, which may also be obtained from the factory, serves as a holding fixture during extensive repair of a damaged wing. The jig locates the root-rib, leading edge, and tip rib of the wing.

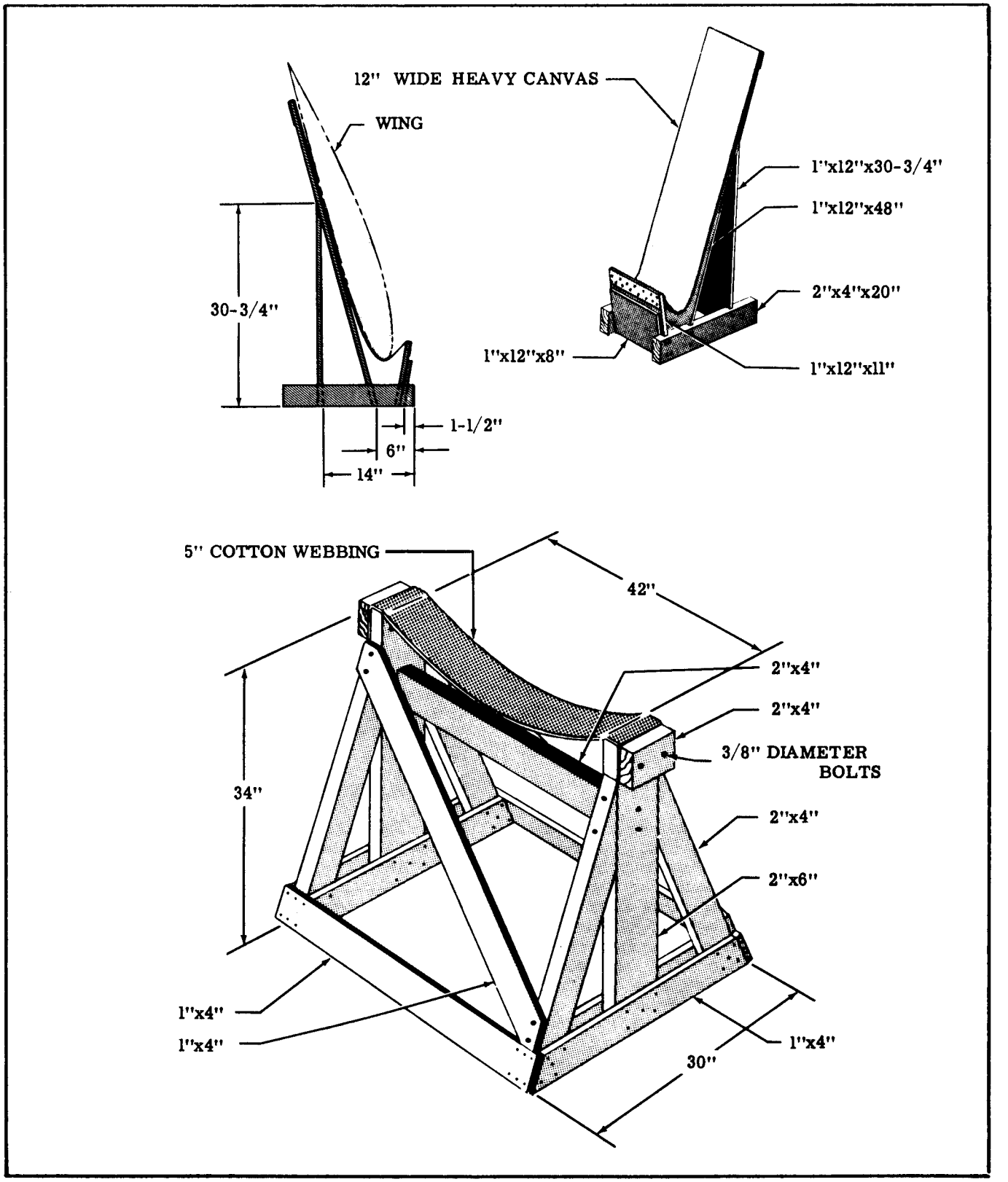

Figure 19-1. Support Stands

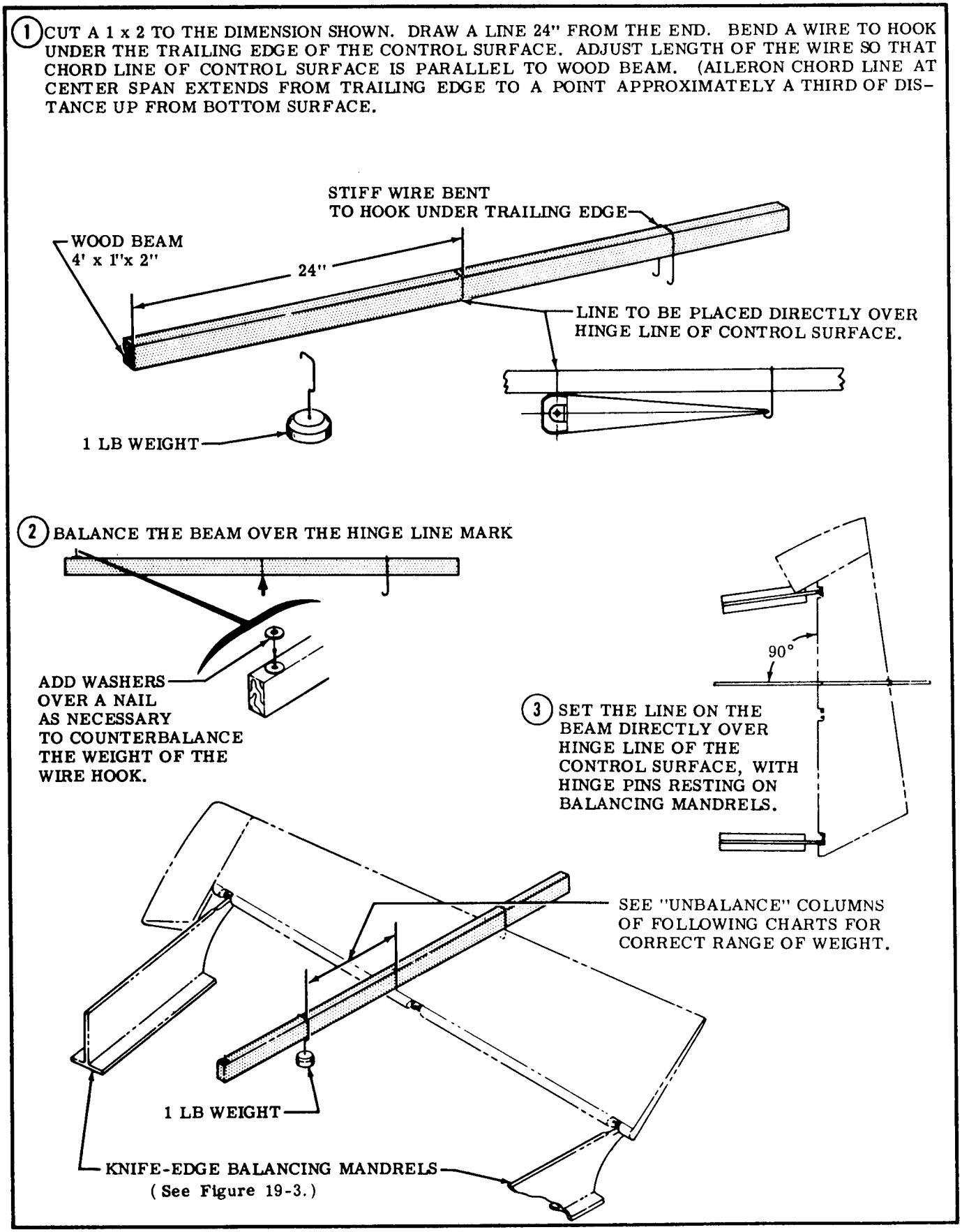

Figure 19-2. Control Surface Balancing (Sheet 1)

		AILERONS		RUDDER		RIGHT ELEVATOR		LEFT ELEVATOR	
Model	Serials	Bal. Weight	Unbalance	Bal. Weight	Unbalance	Bal. Weight	Unbalance	Bal. Weight	Unbalance
150	Prior to 17911	3.54 lbs +1.5 oz -0.0 oz	0.0 to +10.3 in-lbs	0.0 lbs	0.0 to +41.47 in-lbs	0.0 lbs	0.0 to +35.41 in-lbs	0.0 lbs	0.0 to +29.05 in-lbs
150 150A 150B	17911 & on	4.58 lbs +1.5 oz -0.0 oz	0.0 to +8.94 in-lbs	Same as above.		Same as above.		Same as above.	
172	Prior to 46126	3.54 lbs +1.5 oz -0.0 oz	0.0 to +10.3 in-lbs	4.93 lbs +1.0 oz -0.0 oz	0.0 to +2.70 in-lbs	2.38 lbs +1.0 oz -0.0 oz	0.0 to +13.6 in-lbs	2.38 lbs +1.0 oz -0.0 oz	0.0 to +7.80 in-lbs
172	46126 thru 46754	Same as above.		5.12 lbs +1.0 oz -0.0 oz	0.0 to +3.04 in-lbs	Same as above.		Same as above.	
172A	46755 thru 47559	Same as above		4.5 lbs +1.0 oz -0.0 oz	0.0 to +18.71 in-lbs	Same as above.		Same as above.	
172A	47560 thru 47746	4.58 lbs +1.5 oz -0.0 oz	0.0 to +8.94 in-lbs	Same as above.		Same as above.		Same as above.	
172B 172C	17247747 thru 17249085	Same as above.		Same as above.		1.88 lbs ±1.0 oz	0.0 to +24.38 in-lbs	1.88 lbs ±1.0 oz	0.0 to +21.22 in-lbs
172C	17249086 & on	Same as above.		Same as above.		1.53 lbs ±1.0 oz	0.0 to +20.8 in-lbs	1.53 lbs ±1.0 oz	0.0 to +16.0 in-lbs
175	Prior to 55691	3.54 lbs +1.5 oz -0.0 oz	0.0 to +10.3 in-lbs	4.93 lbs +1.0 oz -0.0 oz	0.0 to +2.70 in-lbs	2.38 lbs +1.0 oz -0.0 oz	0.0 to +13.6 in-lbs	2.38 lbs +1.0 oz -0.0 oz	0.0 to +7.80 in-lbs
175	55691 thru 56238	Same as above.		5.12 lbs +1.0 oz -0.0 oz	0.0 to +3.04 in-lbs	Same as above.		Same as above.	

Figure 19-2. Control Surface Balancing (Sheet 2)

Model	Serials	AILERONS Bal. Weight	AILERONS Unbalance	RUDDER Bal. Weight	RUDDER Unbalance	RIGHT ELEVATOR Bal. Weight	RIGHT ELEVATOR Unbalance	LEFT ELEVATOR Bal. Weight	LEFT ELEVATOR Unbalance
175A	56239 thru 56724	Same as above.		4.50 lbs +1.0 oz -0.0 oz	0.0 to +18.71 in-lbs	1.88 lbs ±1.0 oz	0.0 to +24.38 in-lbs	1.88 lbs ±1.0 oz	0.0 to +21.22 in-lbs
175A 175B 175C	56725 thru 17257064	4.58 lbs +1.5 oz -0.0 oz	0.0 to +8.94 in-lbs	Same as above.		Same as above.		Same as above.	
175C	17557065 & on	Same as above.		Same as above.		1.53 lbs ±1.0 oz	0.0 to +20.8 in-lbs	1.53 lbs ±1.0 oz	0.0 to +16.0 in-lbs
180	Prior to 50260	4.72 lbs +2.0 oz -0.0 oz	0.0 to +8.47 in-lbs	3.07 lbs ±1.0 oz	0.0 to +3.8 in-lbs	2.58 lbs ±1.0 oz	0.0 to +9.3 in-lbs	2.58 lbs ±1.0 oz	0.0 to +9.3 in-lbs
180 180B 180C	50260 thru 50747	5.43 lbs +1.5 oz -0.0 oz	0.0 to +9.64 in-lbs	Same as above.		Same as above.		Same as above.	
180C 180D 180E	50748 thru 18051099	Same as above.		Same as above.		1.41 lbs ±1.0 oz	0.0 to +20.8 in-lbs	1.41 lbs ±1.0 oz	0.0 to +20.8 in-lbs
180E	18051100 & on	Same as above.		Same as above.		1.44 lbs ±1.0 oz	0.0 to +17.2 in-lbs	1.44 lbs ±1.0 oz	0.0 to +17.2 in-lbs
182	Prior to 51214	4.72 lbs +2.0 oz -0.0 oz	0.0 to +8.47 in-lbs	3.07 lbs ±1.0 oz	0.0 to +3.8 in-lbs	2.58 lbs ±1.0 oz	0.0 to +9.3 in-lbs	2.58 lbs ±1.0 oz	0.0 to +9.3 in-lbs
182 182B	51214 thru 52358	5.43 lbs +1.5 oz -0.0 oz	0.0 to +9.64 in-lbs	Same as above.		Same as above.		Same as above.	
182C	52359 thru 52611 & 52613	Same as above.		3.00 lbs +2.0 oz -0.0 oz	0.0 to +3.9 in-lbs	Same as above.		Same as above.	

Figure 19-2. Control Surface Balancing (Sheet 3)

		AILERONS		RUDDER		RIGHT ELEVATOR		LEFT ELEVATOR	
Model	Serials	Bal. Weight	Unbalance	Bal. Weight	Unbalance	Bal. Weight	Unbalance	Bal. Weight	Unbalance
182C 182D 182E	52612 & 52614 thru 18253858	Same as above.		2.50 lbs ±1.0 oz	0.0 to +7.6 in-lbs	1.41 lbs ±1.0 oz	0.0 to +20.8 in-lbs	1.41 lbs ±1.0 oz	0.0 to +20.8 in-lbs
182E	18253859 & on	Same as above.		3.00 lbs ±2.0 oz	0.0 to +6.0 in-lbs	1.75 lbs ±1.0 oz	0.0 to +20.2 in-lbs	1.44 lbs ±1.0 oz	0.0 to +17.2 in-lbs
185	Prior to 185-0238	5.44 lbs +1.5 oz -0.0 oz	0.0 to +7.07 in-lbs	4.25 lbs ±1.0 oz	0.0 to +16.18 in-lbs	1.41 lbs ±1.0 oz	0.0 to +20.8 in-lbs	1.41 lbs ±1.0 oz	0.0 to +20.8 in-lbs
185A	185-0238 thru 185-0359	7.63 lbs ±1.0 oz	0.0 to +3.0 in-lbs	Same as above.		Same as above.		Same as above.	
185A	185-0360 & on	Same as above.		Same as above.		1.44 lbs ±1.0 oz	0.0 to +17.2 in-lbs	1.44 lbs ±1.0 oz	0.0 to +17.2 in-lbs

Weights and moments enclosed by a border apply to all spares prior to the serials listed.

NOTE

"Balance Weights" listed above refer to the fixed lead balancing weights mounted in the counter-balance area of the control surface. "Unbalance" columns list the moment tolerances within which the control surface must balance. These tolerances must never be exceeded in the final flight configuration, regardless of whether the control surface is painted or unpainted. Likewise, the balance weight tolerances must never be exceeded to achieve the unbalance specified.

Figure 19-2. Control Surface Balancing (Sheet 4)

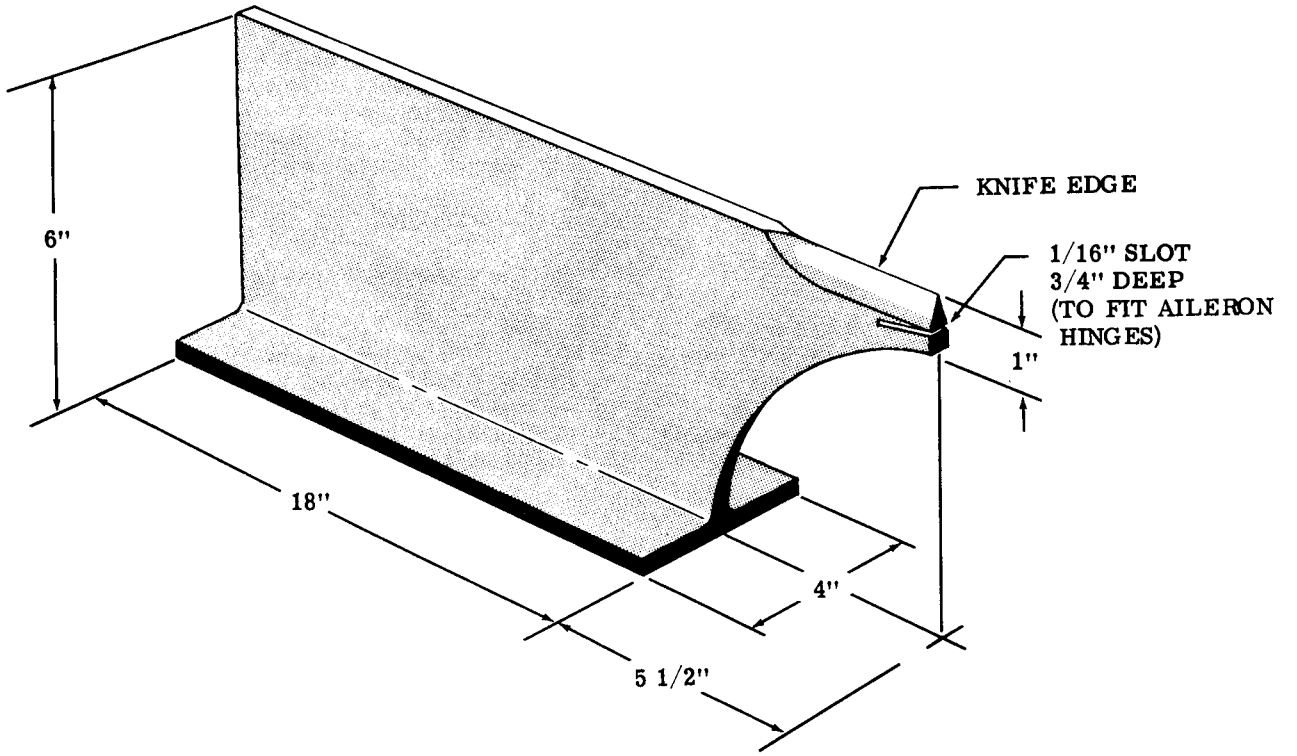

a. Place pins through control surface hinges and position on knife edge of balancing mandrels; secure ailerons by inserting hinges into the slots in the mandrels.
b. Balance in still air.
c. Hinge lines must be horizontal.
d. All control surfaces are neutral to underbalanced. This means the control surfaces should be horizontal or hang down from the hinge line; they should never swing up from horizontal.

Figure 19-3. Balancing Mandrel

19-9A. SKIN REPAIR MATERIALS.

19-9B. Thickness of a skin on which a repair is to be made can easily be determined by measuring with a micrometer. In general, skins used on Cessna aircraft covered in this manual are made from 2024 aluminum alloy, heat treated to a -T3, -T4, or -T42 condition.

If the material of a skin cannot be readily determined, 2024-T3 may be used in making repairs, since the strength of -T3 is greater than -T4 or -T42 (-T4 and -T42 may be used interchangeably, but they may not be substituted for -T3).

A few components (some empennage tips, for example) have been fabricated from an easily formed and/or readily weldable material, such as 5052-O and 6061-O. These can be recognized by their relative softness. Royalite or Fiberglas is also used for some of these components.

SHOP NOTES:

19-10. WING.

19-11. The wing assemblies are of the semi-cantilever type employing semi-monocoque type of structure. Basically, the internal structure consists of built-up front and rear spar assemblies, a formed auxiliary spar assembly and formed sheet metal nose, intermediate, and trailing edge ribs. Stressed skin, riveted to the rib and spar structures, completes the rigid structure. Fiberglas wing tips have replaced the metal ones formerly used.

19-12. ACCESS openings (hand holes with removable cover plates) are located in the underside of the wing between the wing root and tip section. These openings afford access to the aileron bellcranks, flap bellcranks, electrical wiring, strut attaching fittings, aileron control cable pulley and control cable-disconnect points.

19-13. WING SKIN.

19-14. NEGLIGIBLE DAMAGE. Any smooth dents in the wing skin that are free from cracks, abrasions and sharp corners, which are not stress wrinkles and do not interfere with any internal structure or mechanism, may be considered as negligible damage. In areas of low stress intensity, cracks, deep scratches or deep, sharp dents, which after trimming or stop drilling can be enclosed by a two-inch circle, can be considered negligible if the damaged area is at least one diameter of the enclosing circle away from all existing rivet lines. Stop drilling is considered a temporary repair.

19-15. DAMAGE REPAIRABLE BY PATCHING. Skin damage aft of the front spar which exceeds the negligible damage limit but is not extensive enough to necessitate replacement of a skin panel can be repaired by patching. Figures 19-9 thru 19-12 outline typical repairs that can be used for patching the wing skin. Self-plugging blind skin patches may be used in any area where it is not possible to buck rivets from the inside. Before installing any large patch, trim the damaged area to a rectangular pattern, leaving at least one-half inch radius at each corner. Trim the damaged area burr-free so the sides of the hole lie spanwise or chord-wise.

19-16. DAMAGE REPAIRABLE BY INSERTION. (See figure 19-12.) Skin damage ahead of the front spar and also where the optimum in appearance is desired should be repaired by the insertion method. The damaged portion of the skin should be removed, leaving a rectangular burr-free hole with minimum corner radii of one-half inch. A doubler of appropriate size must be employed along the edges that do not lie along existing panel splices. The gage and material of the doubler is normally the same as that used for the insertion material, that is, the original strength material and thickness as that of the surrounding skin.

19-17. DAMAGE NECESSITATING REPLACEMENT OF PARTS. If the skin is badly damaged, repairs should be made by replacing an entire skin panel from one structural member to the next. The repair seams should be made to lie along stiffening members, or bulkheads, and each seam should be made exactly the same in regard to rivet size, spacing and rivet pattern as the manufactured seam at the edges of the original sheet. If the two manufactured seams are different, the stronger one should be copied.

19-18. WING RIBS.

19-19. NEGLIGIBLE DAMAGE. Refer to paragraph 19-14.

19-20. REPAIRABLE DAMAGE. Repairs for wing rib webs and flanges are shown in figure 19-8. Before repairing is attempted, all cracks or deep scratches must be stop drilled with a 3/32-inch drill and all other types of damage must be trimmed.

NOTE

Do not leave any sharp corners or ragged edges in the damaged area.

19-21. DAMAGE NECESSITATING REPLACEMENT OF PARTS. Parts such as stiffeners, small ribs, clips and brackets should be replaced if their damage exceeds that specified as negligible. These parts, due to their size, are usually impractical to repair. In many instances, time required to replace the damaged part may be considerably less than time required to repair it. This should be considered carefully prior to making a repair.

19-22. WING SPARS.

19-23. REPAIR OF WING SPARS is shown in figure 19-6. Service Kits are available for certain types of repairs. It is often practical to cut repair pieces from spare parts listed in Parts Catalogs.

19-24. AILERONS.

19-25. REPAIR of a flight control surface should be accomplished with great care, and the feasibility of repair should be weighed against the obvious advantages of replacement of the entire assembly. Damaged ribs, spars and skins should, if possible, be replaced rather than patched. When skin patches must be made, the insert-type patch is generally superior, since this type of patch retains the "clean" surface of the original skin. After repair and repainting, the surface should be restored to its proper static balance.

Figure 19-4 has been deleted. See paragraph 19-9A.

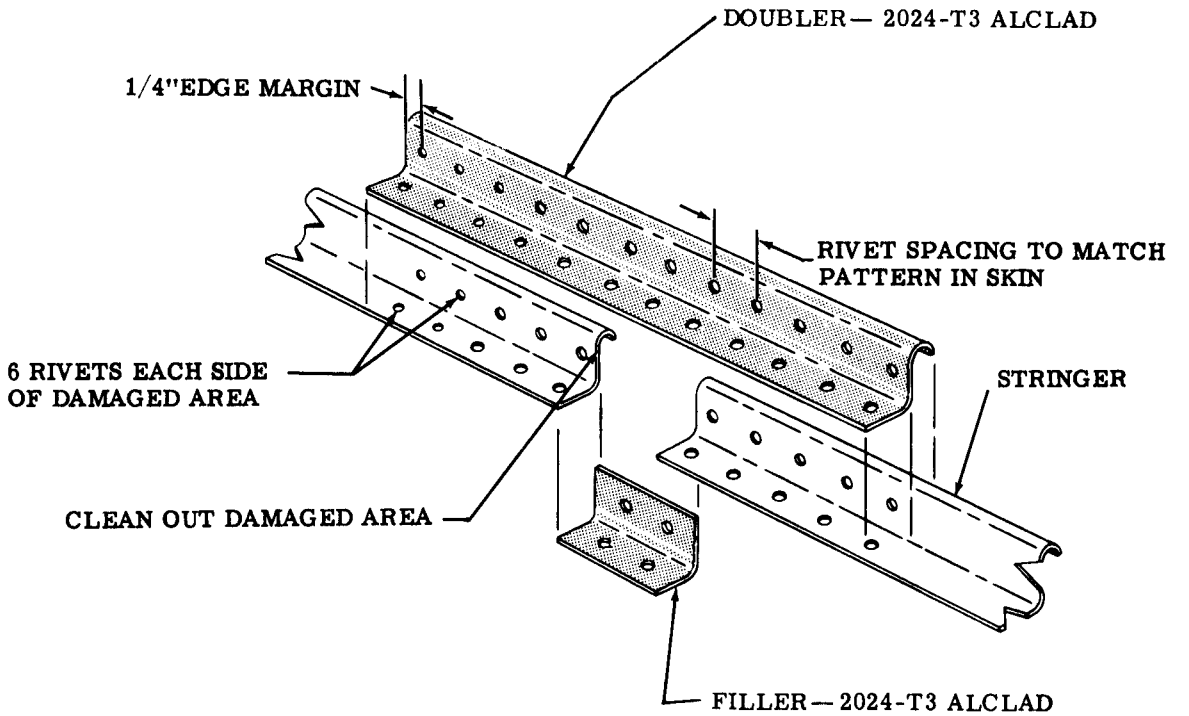

A—A

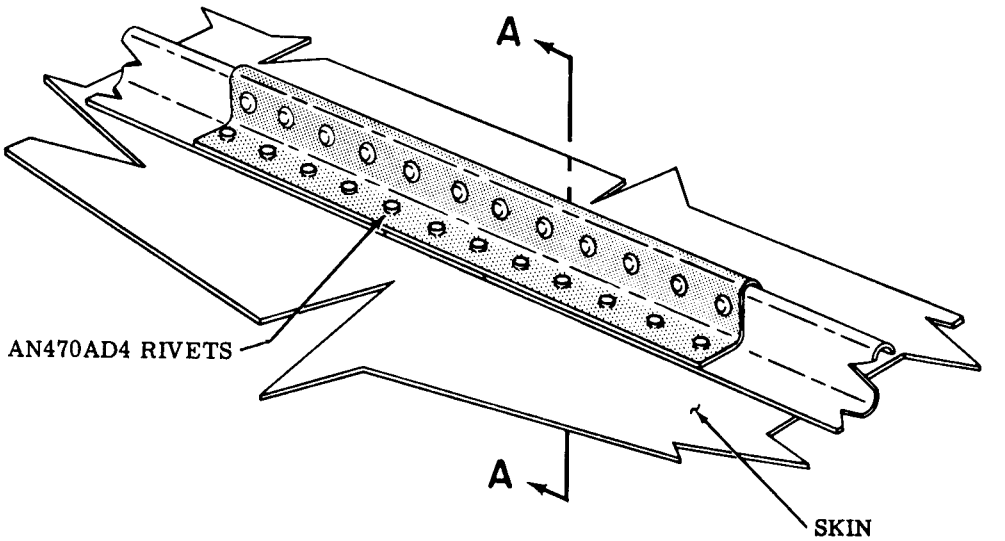

ORIGINAL PARTS

REPAIR PARTS

REPAIR PARTS IN CROSS SECTION

NOTE

Repair doublers must equal repaired material in gage. It is often practical to cut repair pieces from spare parts listed in Parts Catalogs.

Figure 19-5. Wing Stringer Repair

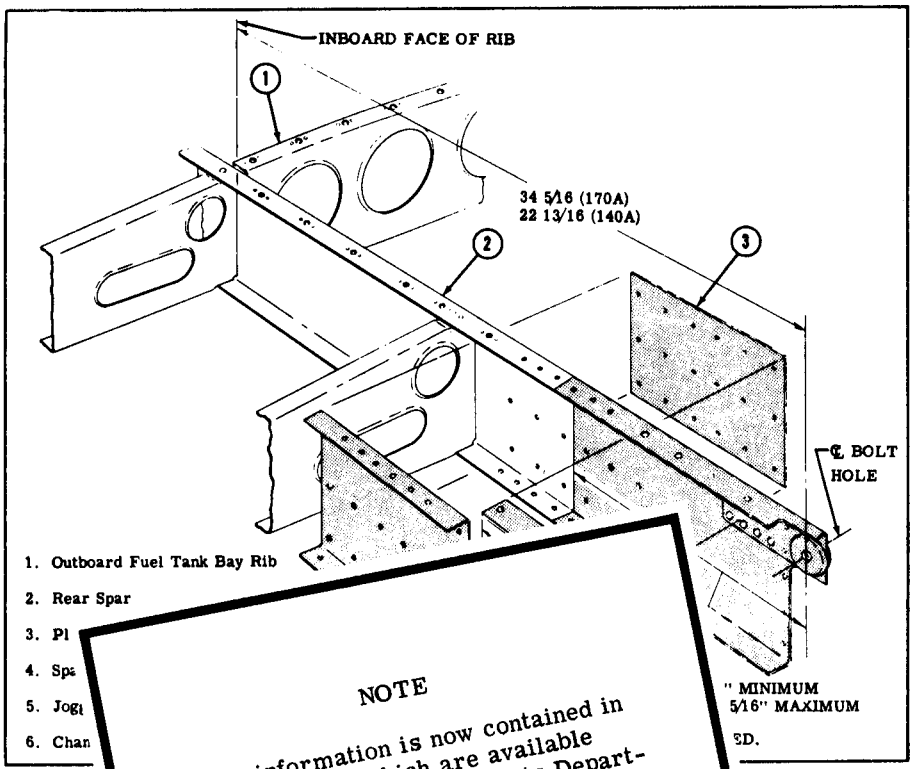

1. Outboard Fuel Tank Bay Rib
2. Rear Spar
3. Pl
4. Sp
5. Jog
6. Chan

NOTE

This information is now contained in Service Kits, which are available from the Cessna Spare Parts Department. These Kits supply parts and instructions for repairing the inboard end of rear wing spars.

1. This re ... removal is optional.
2. Remove
3. Remove ... opening. This will prov.
4. Cut off da ... " and a maximum of 25 5/16'
5. Attach chan
6. Cut the spar ... between outboard fuel ta
7. Slide the spar ... ...mp in place with "C" clamps and check dimensi
8. Rivet spar seg ... ...n shown.
9. Trim and install the joggled angle (5) so that the outboard end of the angle butts against the inboard end of of the channel.
10. Rivet skins in place as necessary. Replace tank and tank cover.

NOTE

In case of any slight damage in area 4, plate #3, channel #6 and angle #5 may be used as reinforcements without the replacement of section 4.

Figure 19-6. Wing Spar Repair - Sheet 1

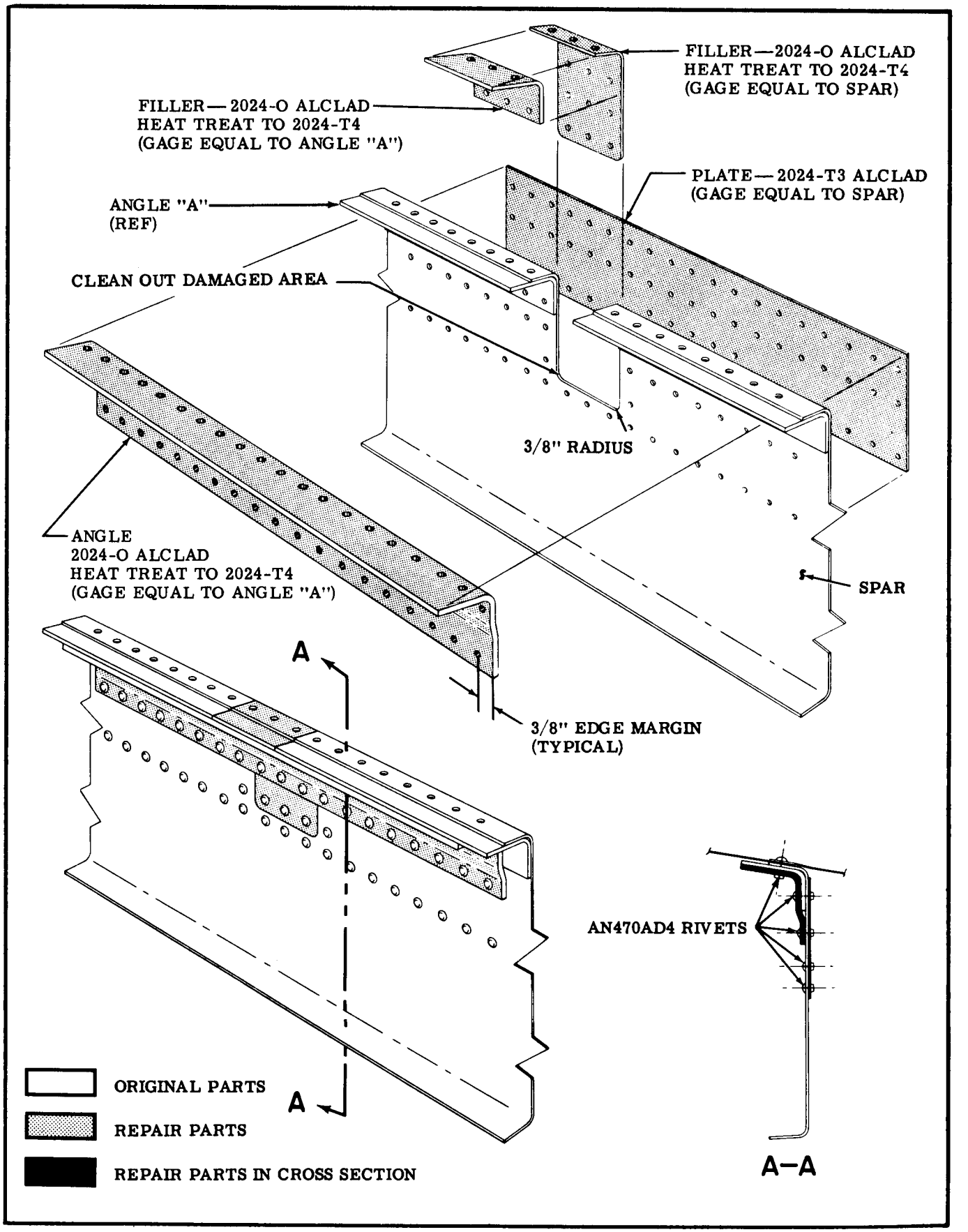

Figure 19-6. Wing Spar Repair - Sheet 2

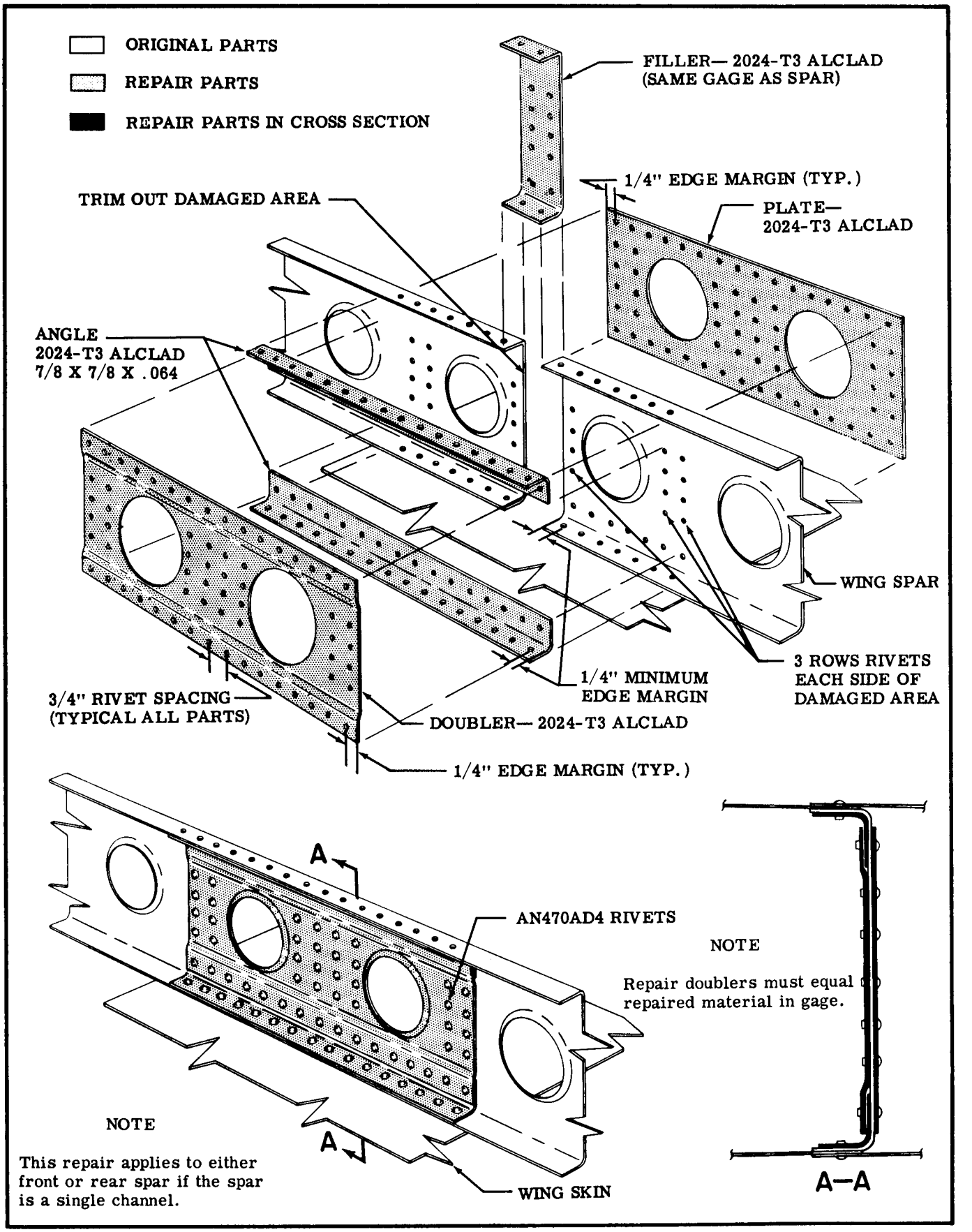

Figure 19-6. Wing Spar Repair - Sheet 3

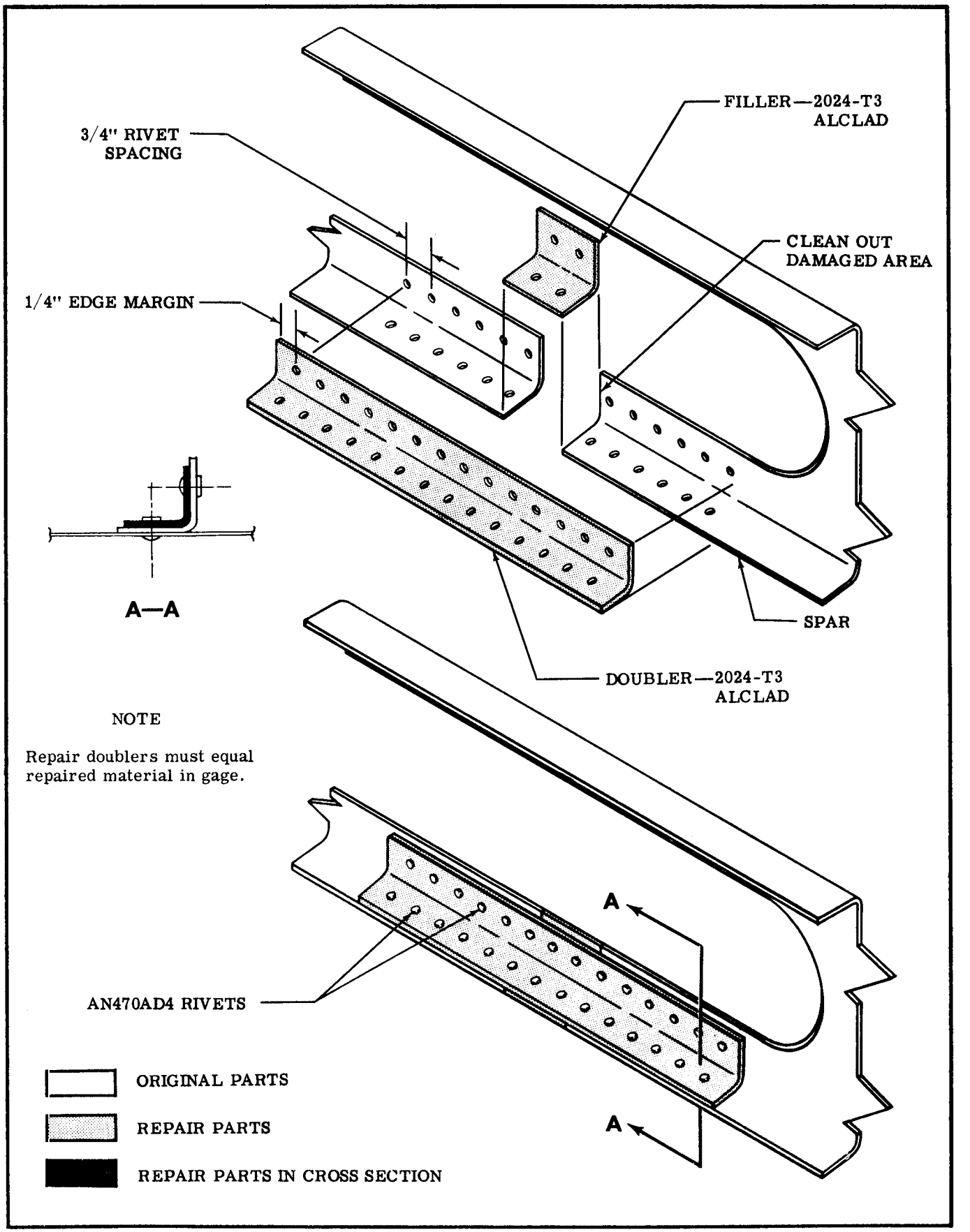

Figure 19-6. Wing Spar Repair - Sheet 4

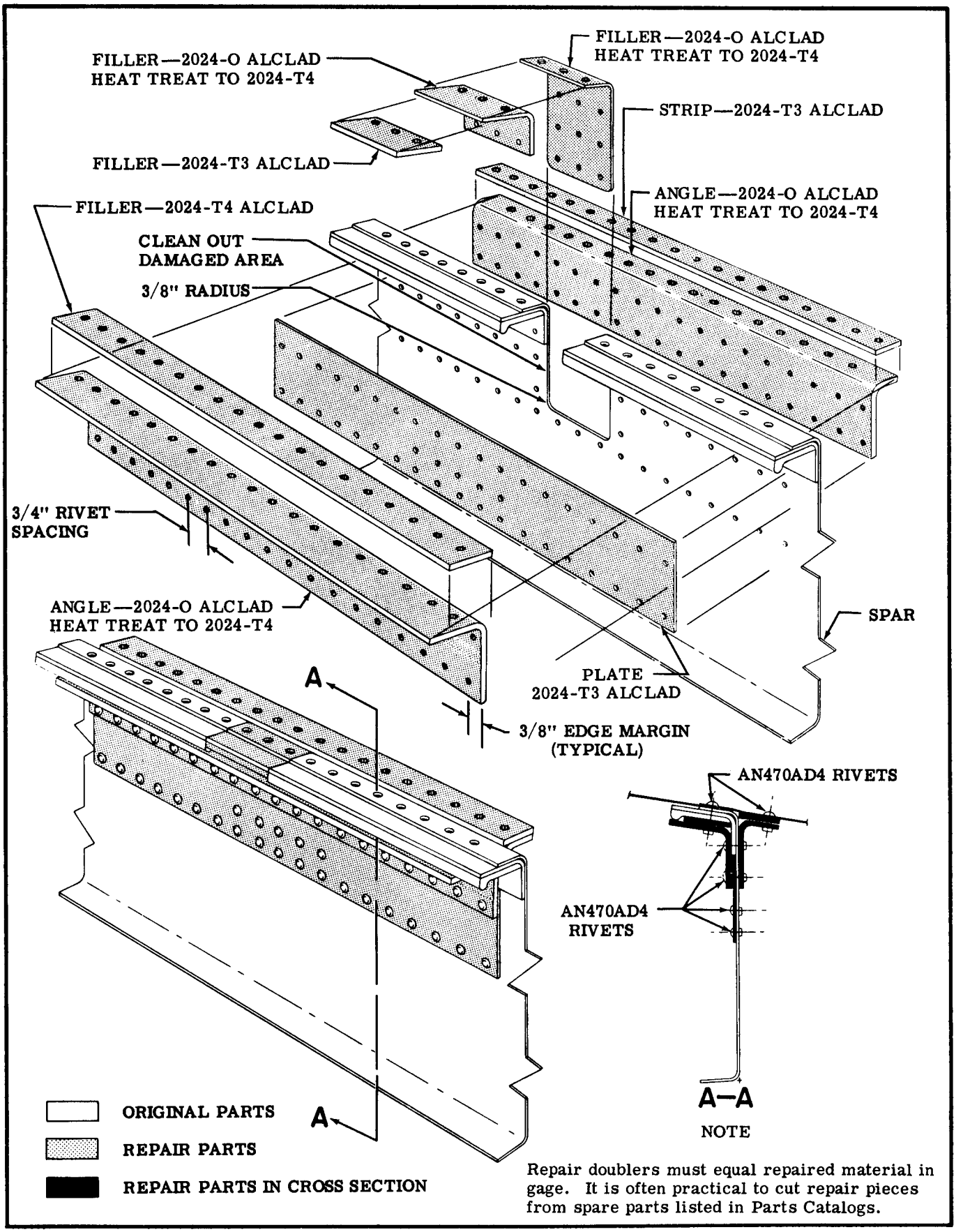

Figure 19-6. Wing Spar Repair - Sheet 5

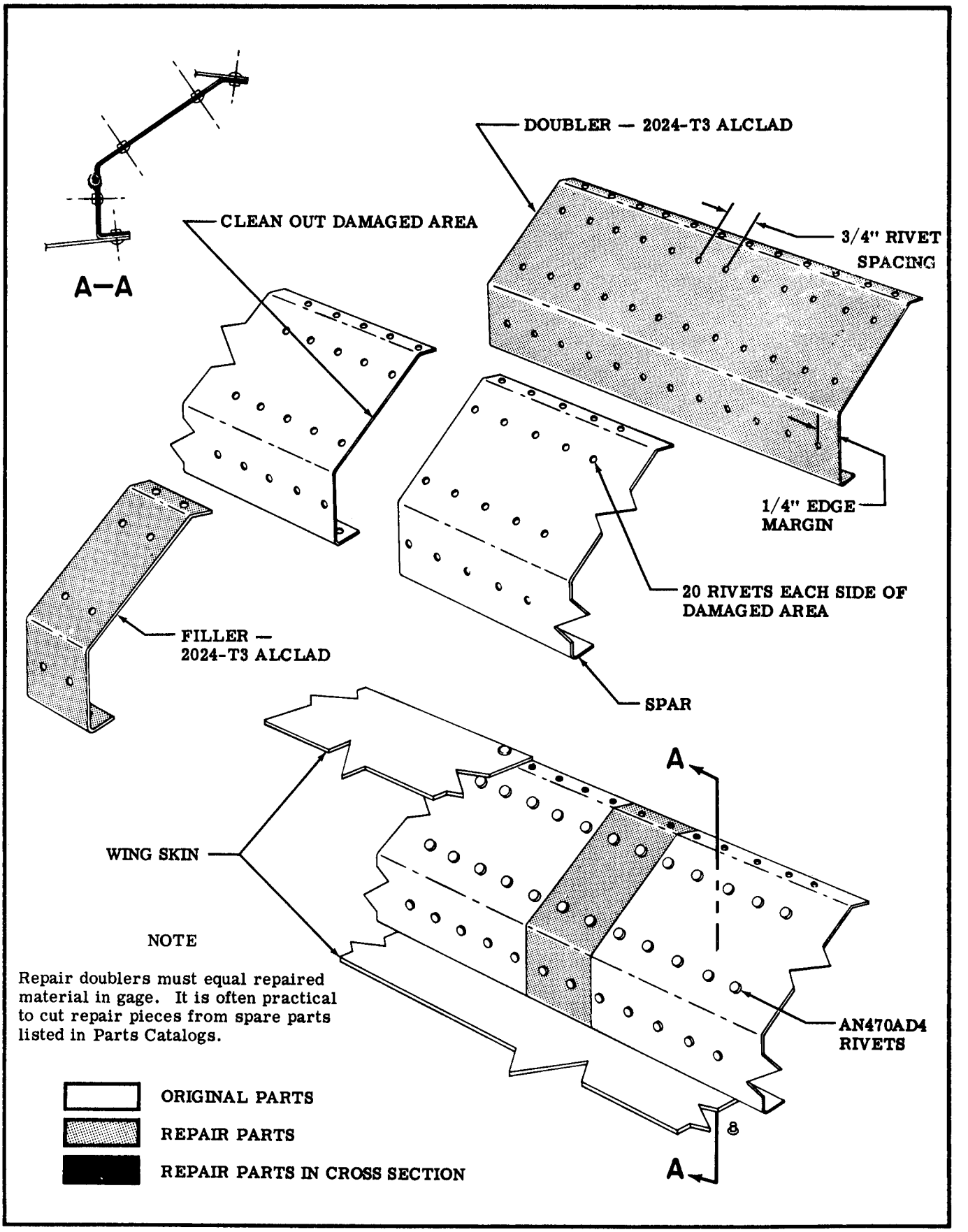

NOTE

Repair doublers must equal repaired material in gage. It is often practical to cut repair pieces from spare parts listed in Parts Catalogs.

Figure 19-7. Auxiliary Spar Repair

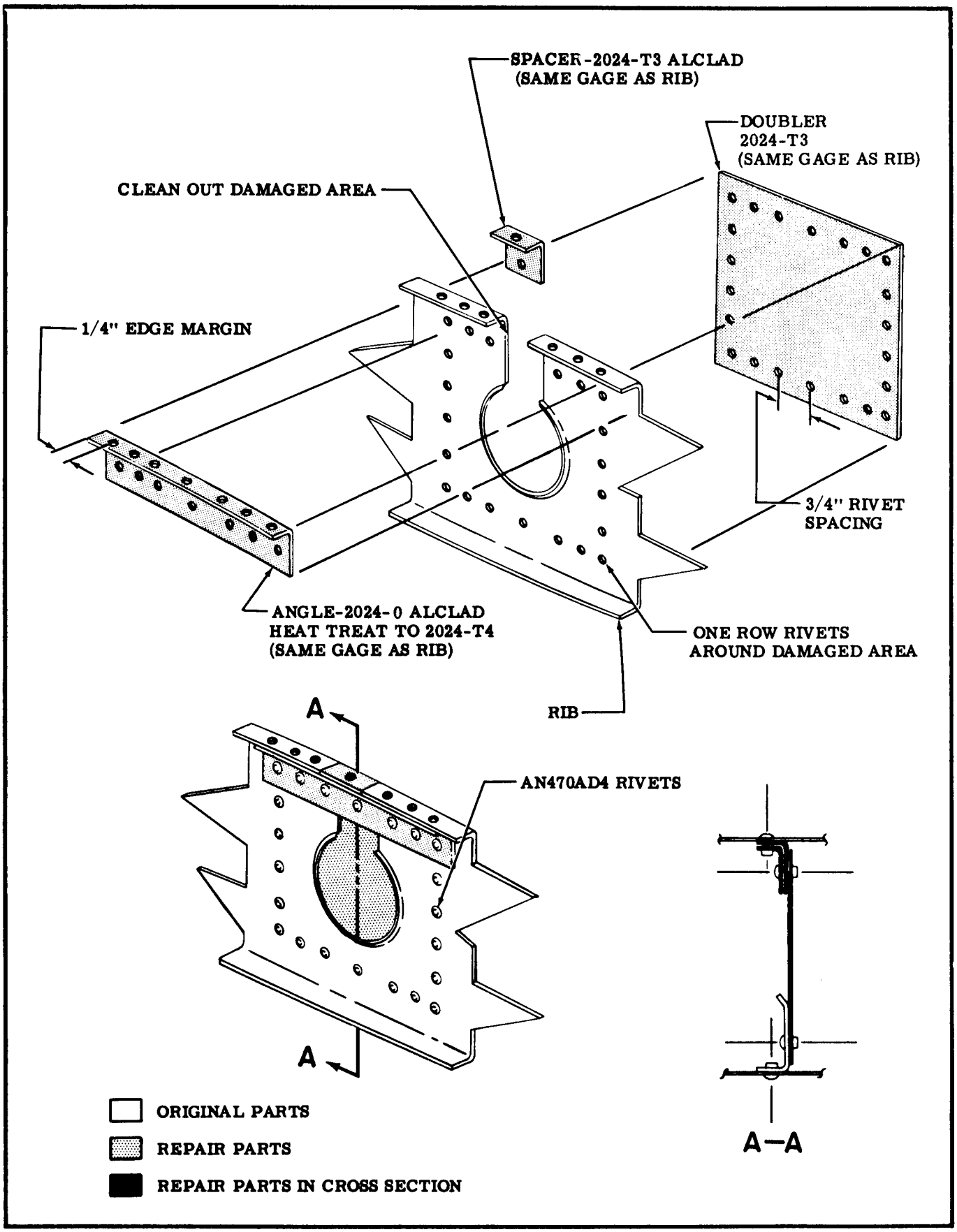

Figure 19-8. Wing Rib Repairs - Sheet 1

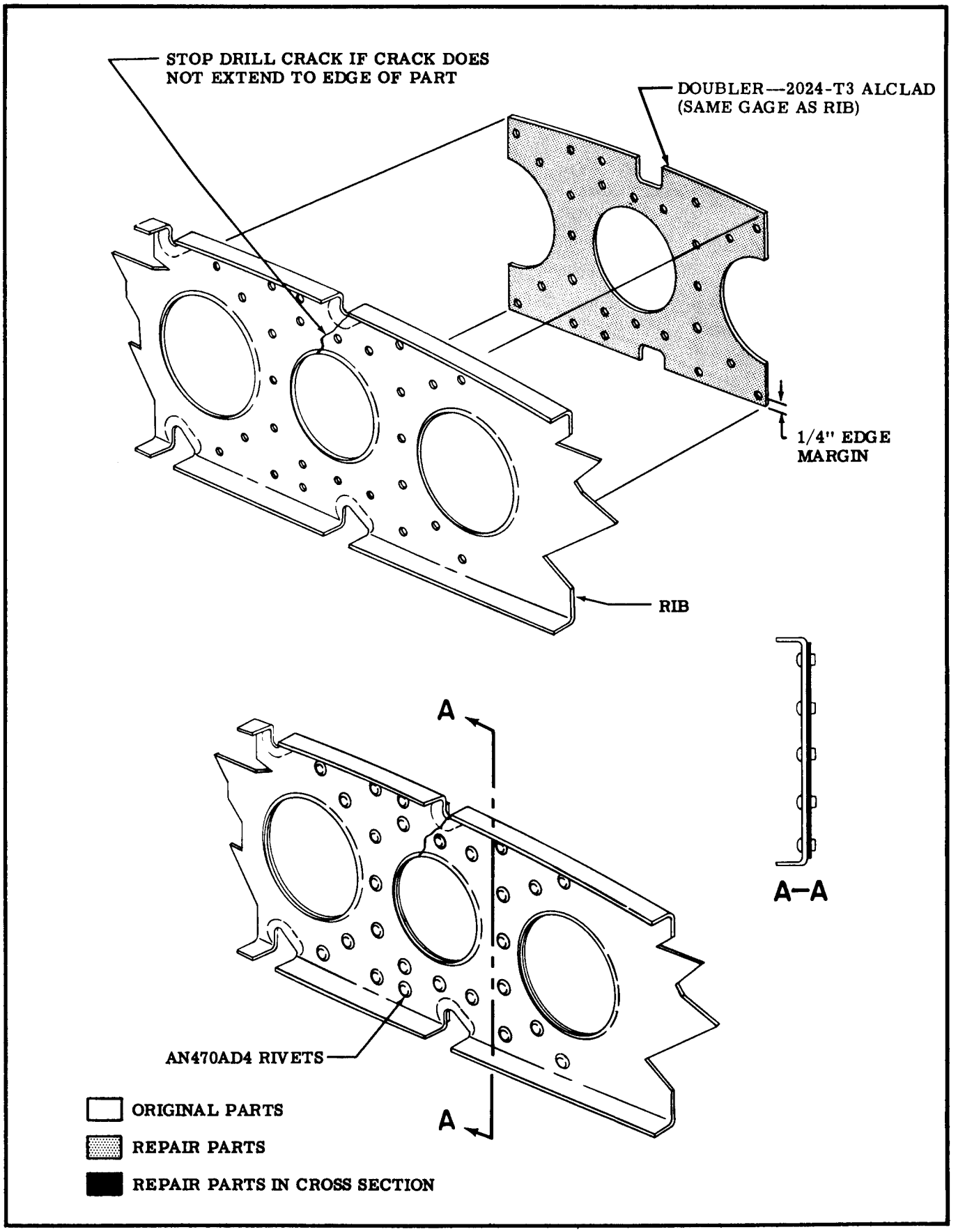

Figure 19-8. Wing Rib Repairs - Sheet 2

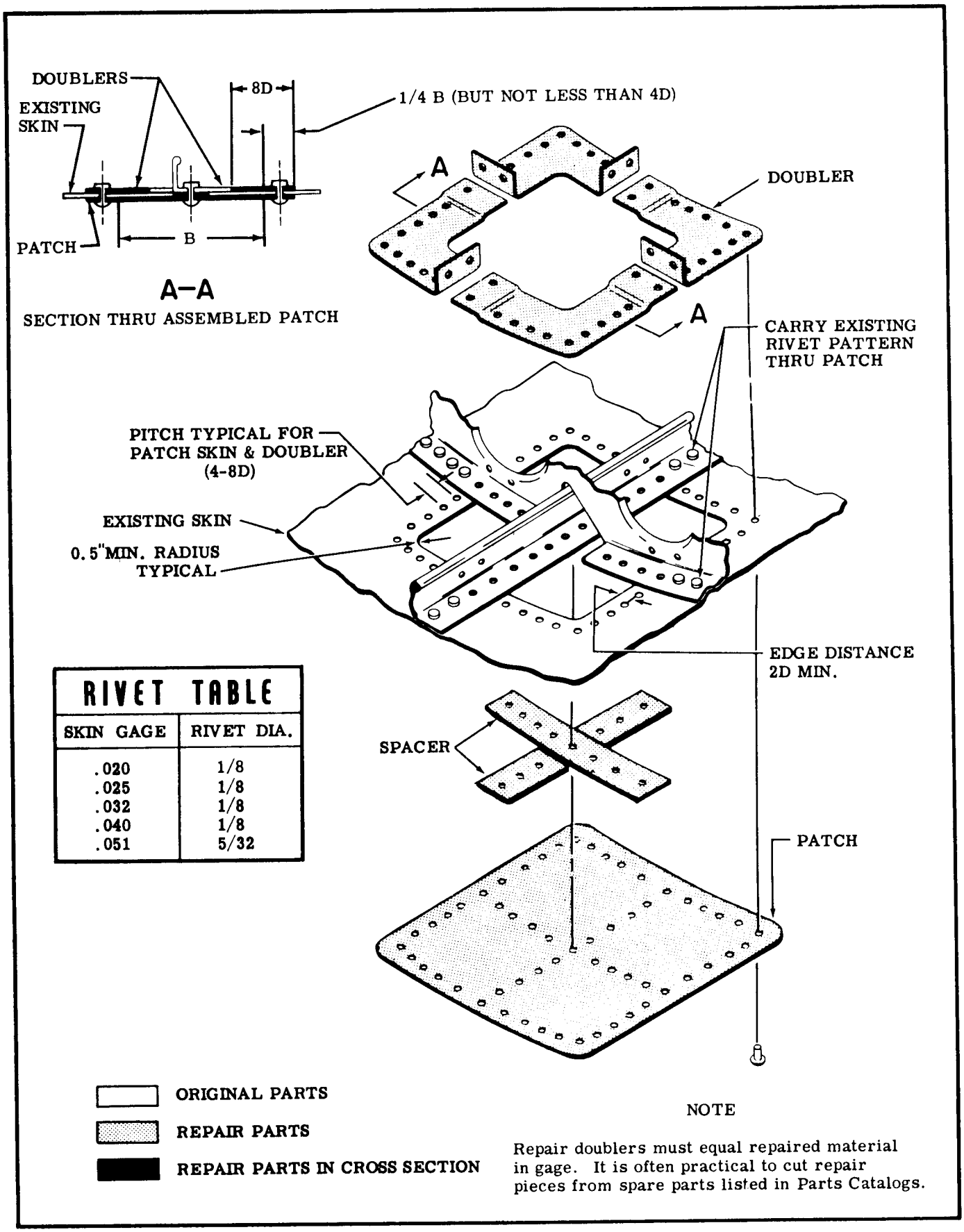

RIVET TABLE	
SKIN GAGE	RIVET DIA.
.020	1/8
.025	1/8
.032	1/8
.040	1/8
.051	5/32

NOTE

Repair doublers must equal repaired material in gage. It is often practical to cut repair pieces from spare parts listed in Parts Catalogs.

Figure 19-9. Over-Structure Skin Repair — Sheet 1

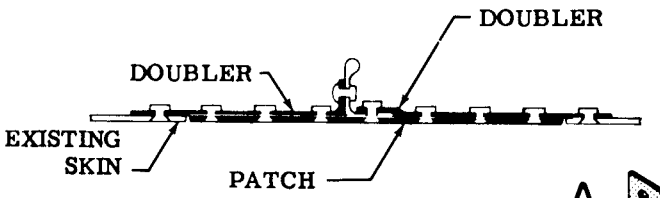

A–A

SECTION THRU ASSEMBLED PATCH

NOTE

THIS IS NOT RECOMMENDED IN AREAS WHERE INTERCOSTAL STRINGERS JOIN BULKHEADS.

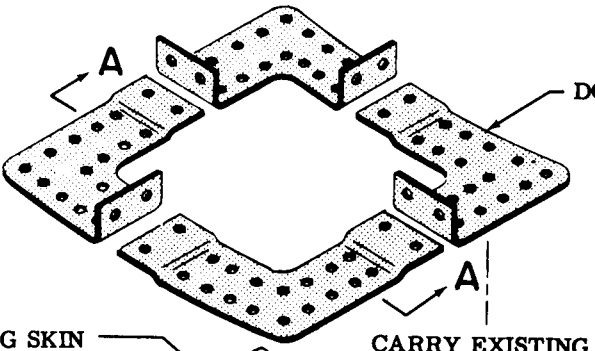

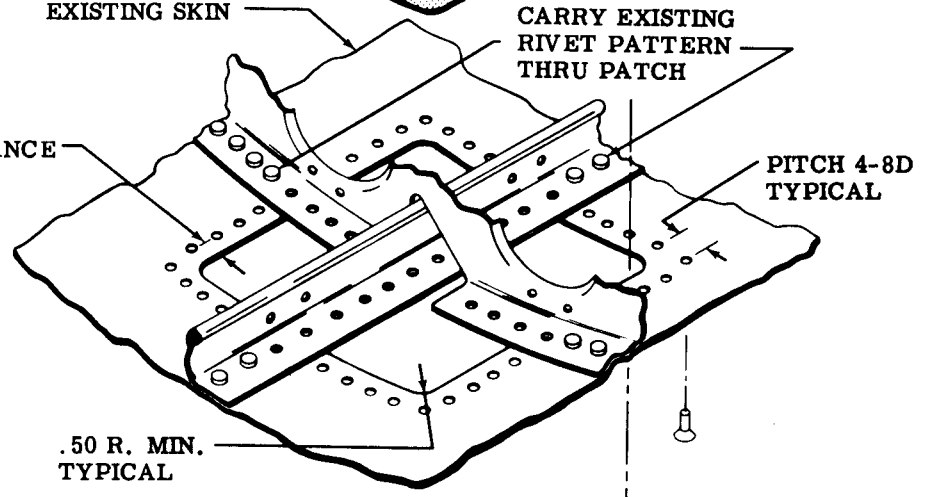

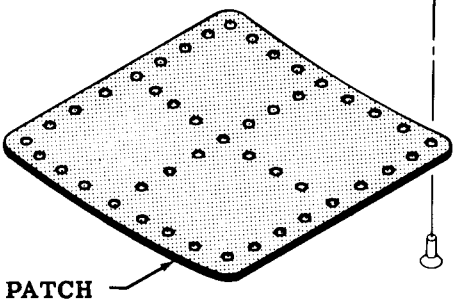

RIVET TABLE	
SKIN GAGE	RIVET DIA.
.020	1/8
.025	1/8
.032	1/8
.040	1/8
.051	5/32

ORIGINAL PARTS

REPAIR PARTS

REPAIR PARTS IN CROSS SECTION

NOTE

Repair doublers must equal repaired material in gage. It is often practical to cut repair pieces from spare parts listed in Parts Catalogs.

Figure 19-9. Over-Structure Skin Repair — Sheet 2

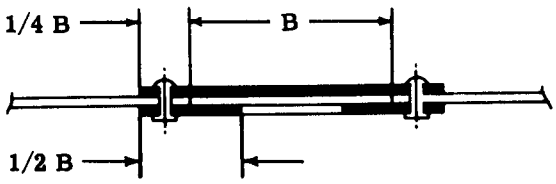

SECTION THRU ASSEMBLED PATCH

A–A

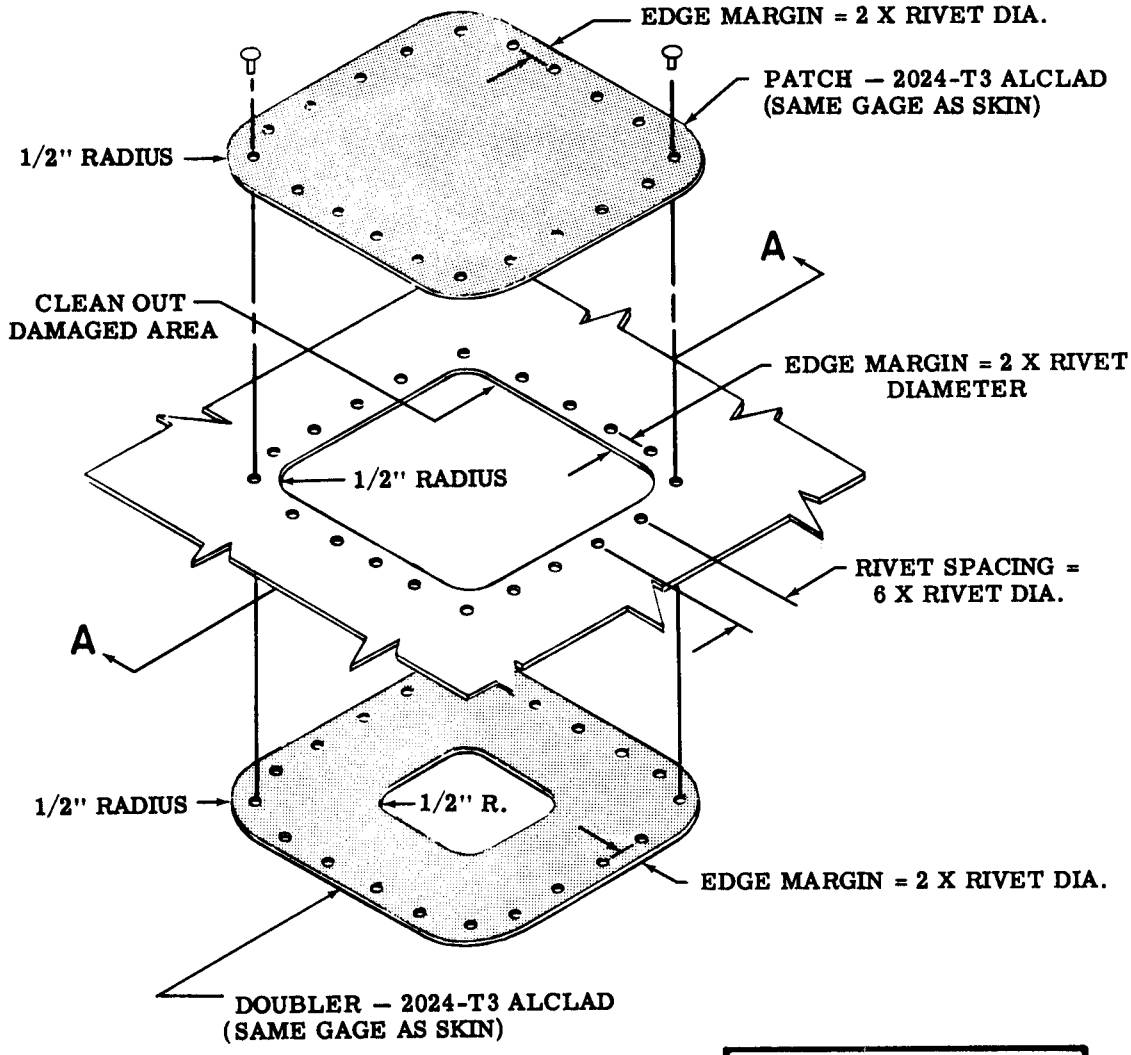

ORIGINAL PARTS

REPAIR PARTS

REPAIR PARTS IN CROSS SECTION

RIVET TABLE	
SKIN GAGE	RIVET DIA.
.020	1/8
.025	1/8
.032	1/8
.040	1/8
.051	5/32

Figure 19-10. Clear-of-Structure Skin Repair

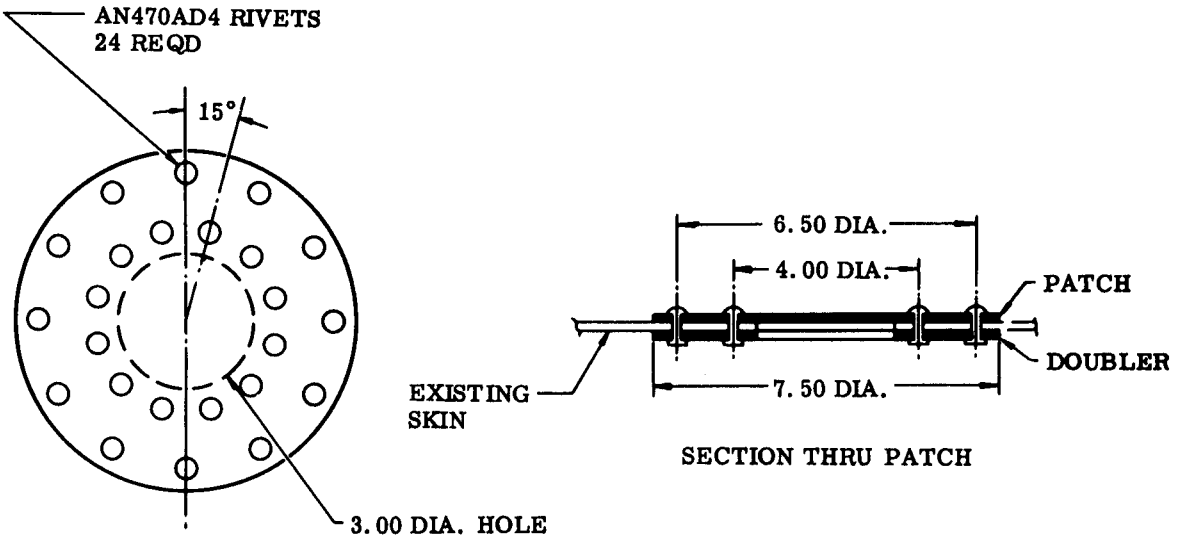

PATCH REPAIR FOR 3 INCH DIAMETER HOLE

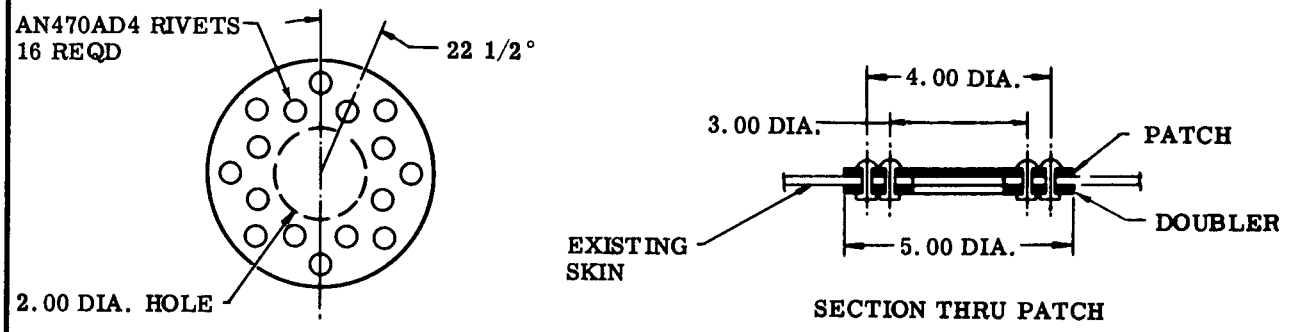

PATCH REPAIR FOR 2 INCH DIAMETER HOLE

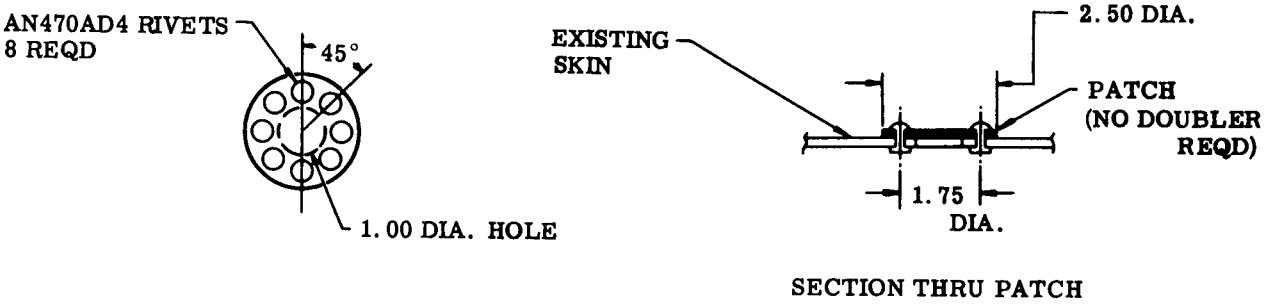

PATCH REPAIR FOR 1 INCH DIAMETER HOLE

Figure 19-11. Patch Repair of Circular Holes

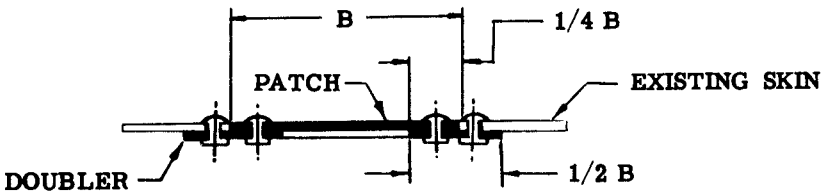

SECTION THRU ASSEMBLED PATCH

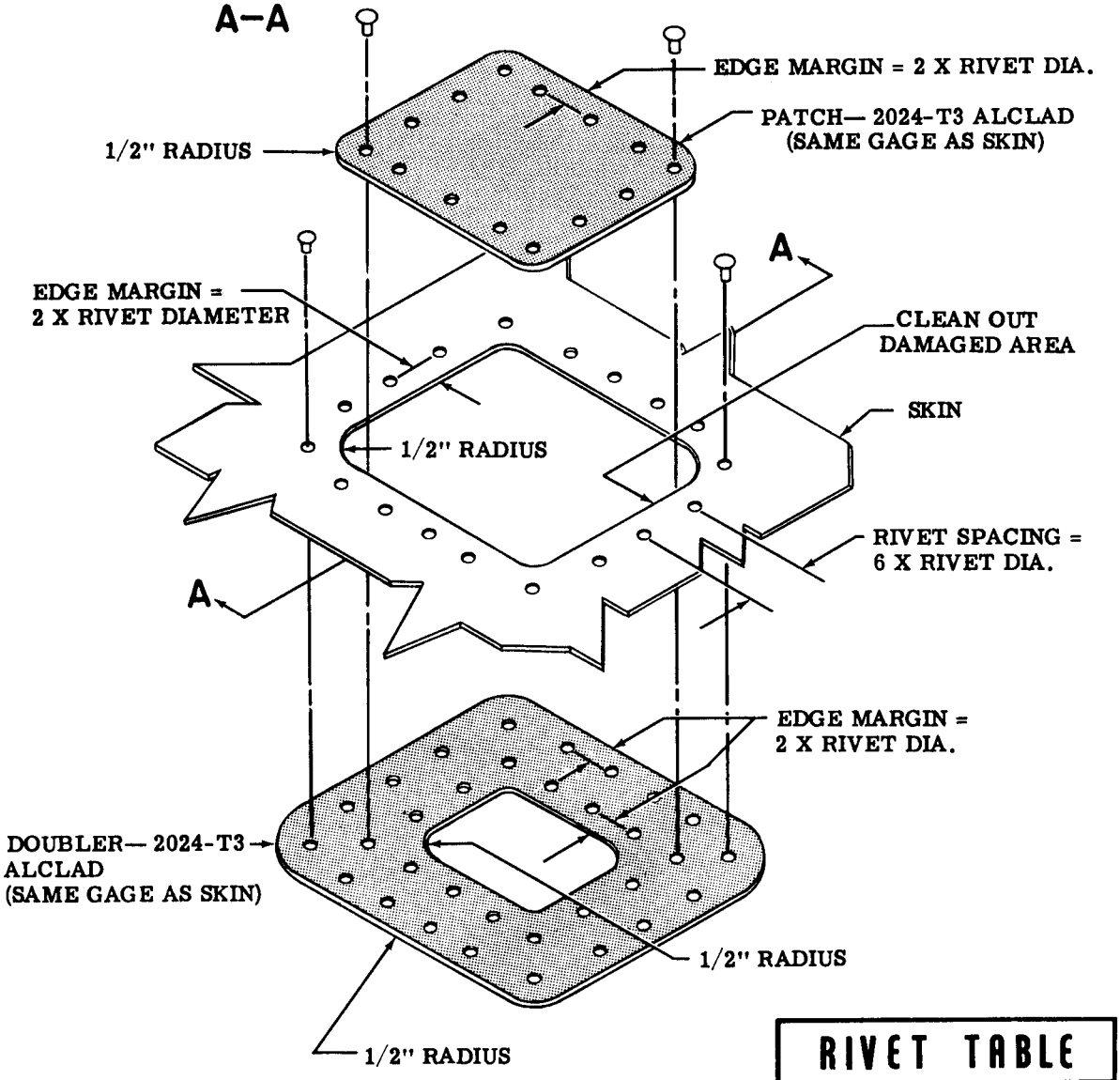

ORIGINAL PARTS

REPAIR PARTS

REPAIR PARTS IN CROSS SECTION

RIVET TABLE

SKIN GAGE	RIVET DIA.
.020	1/8
.025	1/8
.032	1/8
.040	1/8
.051	5/32

Figure 19-12. Insert Patch

19-26. FLAPS.

19-27. REPAIR of the flaps, as with all flight control surfaces, should be accomplished with great care. Damaged ribs, spars and skins should be replaced, if possible, rather than repaired. Insert-type patches may be used to retain a "clean" surface or to maintain proper clearance.

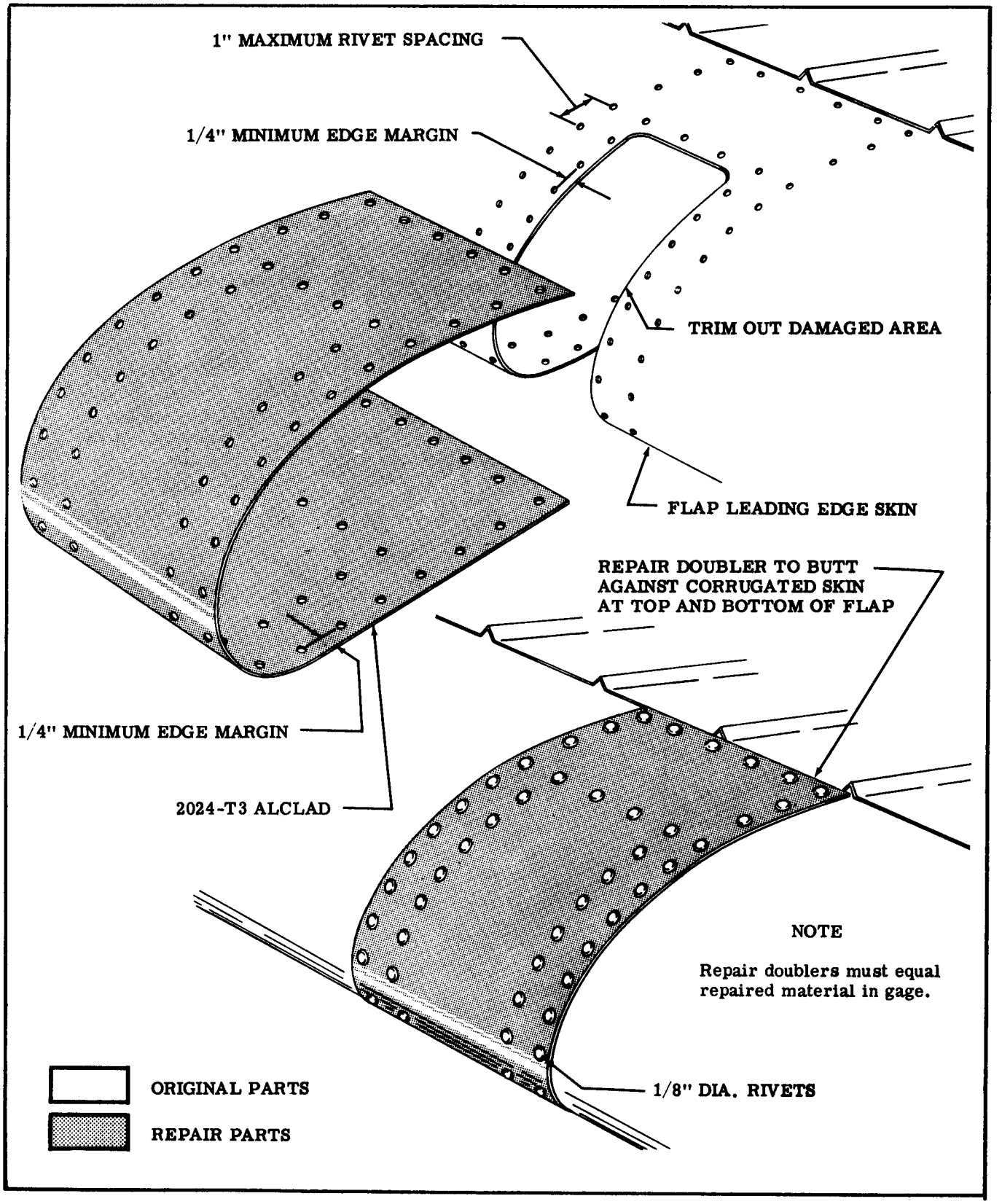

Figure 19-13. Flap Leading Edge Repair

Figure 19-14 has been deleted. See paragraph 19-9A.

19-28. TAIL GROUP.

19-29. The tail group is of full cantilever design, consisting of the conventional arrangement of vertical fin and rudder, horizontal stabilizer, and elevators. The tail group is constructed of metal spars and ribs covered with metal skin. Some tips are Royalite or Fiberglas.

19-30. VERTICAL FIN AND DORSAL AREA.

19-31. NEGLIGIBLE DAMAGE. Refer to paragraph 19-14.

19-32. REPAIRABLE DAMAGE. Repair of skins can be accomplished in accordance with figures 19-9 through 19-12. Ribs and spars can be repaired as shown in figures 19-6 and 19-8. Access to internal structure can be gained by removing skin attaching rivets and flexing the skin. Royalite and Fiberglas repairs are discussed in paragraphs 19-64 through 19-67.

19-33. DAMAGE NECESSITATING REPLACEMENT OF PARTS. Extrusions, hinge brackets, and small ribs should be replaced rather than repaired. In general, where parts are available, the easiest and most satisfactory repairs can be accomplished by replacing the damaged parts.

19-34. STABILIZER.

19-35. NEGLIGIBLE DAMAGE. Refer to paragraph 19-14.

19-36. REPAIRABLE DAMAGE. Skin damage, exceeding that considered negligible damage, can be repaired by patching. Repairs to spars should consist of channels formed of the same material and bend radius as the spar and extending at least three inches each side of the stop-drilled crack. Access to stabilizer structure may be gained by removing a portion of the rivets along the rear spar and ribs and bending back the skin. Closure can be affected with a minimum of blind rivets, using proper bucking bars and working through the holes provided in the spar web.

19-37. ELEVATORS AND RUDDER.

19-38. NEGLIGIBLE DAMAGE. For a description of negligible damage, refer to paragraph 19-14. The exception to negligible damage on the elevator surfaces is the front spar, where a crack appearing in the web at the hinge fittings or in the tip rib which supports the overhanging balance weight is not considered negligible. Cracks in the overhanging tip rib, in the area at the front spar intersection with the web of the rib, also cannot be considered negligible.

19-39. DAMAGE NECESSITATING REPLACEMENT OF PARTS. Extrusions, hinge brackets, elevator tab, spar and ribs should be replaced rather than repaired. In general, where parts are available, the easiest and most satisfactory repairs can be accomplished by replacing the damaged parts.

19-40. REPAIR of a flight control surface should be accomplished with great care, and the feasibility of repair should be weighed against the obvious advantages of replacement of the entire assembly. Damaged ribs, spars and skins should, if possible, be replaced rather than patched. When skin patches must be made, the insert-type patch is generally superior, since this type of patch retains the "clean" surface of the original skin. After repair and repainting, the surface should be restored to its proper static balance.

19-41. FUSELAGE.

19-42. The fuselage is of semi-monocoque construction consisting of formed bulkheads, longitudinal stringers, reinforcing channels and skin platings.

19-43. NEGLIGIBLE DAMAGE. Refer to paragraph 19-14. Mild corrosion appearing upon alclad surfaces does not necessarily indicate incipient failure of the base metal. However, corrosion of all types should be carefully considered, and approved remedial action taken. Small cans appear in the skin structure of all-metal airplanes. It is strongly recommended however, that wrinkles which appear to have originated from other sources, or which do not follow the general appearance of the remainder of the skin panels, be thoroughly investigated. Wrinkles occurring on open areas which would disappear when the rivet pattern at the edge of the sheet is removed may often be repaired by the addition of a 1/2 x 1/2 x .060-inch 2024-T4 extruded angle, if riveted over the wrinkle and extended to within 1/16 to 1/8-inch of the nearest structural members. Rivet pattern should be identical to the existing manufactured seam at the edge of the sheet. Wrinkles occurring over stringers which disappear when the rivet pattern is removed may be considered negligible. However, the stringer rivet holes may not align themselves perfectly with the skin holes because of a permanent "set" in the stringer. If this is apparent, replacement of the stringer will usually restore the original strength characteristics to the area.

NOTE

Wrinkles occurring in the lower skin of the main landing gear bulkhead areas should not be considered negligible. The skin panel should be opened sufficiently to permit a thorough examination of the lower portion of the landing gear bulkhead and its tie-in structure.

19-44. REPAIRABLE DAMAGE. Mild wrinkles occurring in the upper or lower skin panels in the bay forward of the horizontal stabilizer and which extend through the corners (shoulder areas) may be repaired by the addition of a stringer. A wrinkle, which is hand removable, should be reinforced by a 1/2 x 1/2 x .050-inch 2024-T4 extruded angle. The angle should be inserted fore and aft across the center of the wrinkle and should extend to within 1/16 to 1/8-inch of the fuselage bulkheads comprising the ends of the bay. If wrinkles cannot be removed by hand, the damaged area should be repaired.

19-45. DAMAGE REPAIRABLE BY INSERTION. Where the optimum in appearance is desired, insertion type repairs may be accomplished.

19-46. DAMAGE NECESSITATING REPLACEMENT OF PARTS. Damaged fittings should not be repaired. Seat rails serve as structural parts of the fuselage and should be replaced if damaged beyond the limits of negligible damage. Major skin damage should be repaired by replacing the entire damaged sheet.

NOTE

When replacing entire skin panels, duplication of the formed edge on the original sheet is required. In effect, this flange is a structural member, carrying specific loads across the open areas.

19-47. BULKHEADS.

19-48. DESCRIPTION. Bulkheads are composed of formed "U" channel sections. Aluminum alloy material is formed in the soft condition, then heat treated. Reinforcements of formed sheet metal are used for additional strength requirements on some bulkheads, and a back-to-back double bulkhead arrangement is used on others.

19-49. CRACKED BULKHEAD WEBS OR FLANGES. Acceptable methods of repairing various types of cracks occurring in service are shown in figure 19-8. Small holes (3/32-inch) should be drilled at the extreme ends of the cracks to prevent further spreading. Reinforcement should be added to carry the stresses across the damaged portion and stiffen the joints. The condition causing such cracks to develop at a particular point may be stress concentration at that point, in conjunction with repetition of stress (such as produced by vibration of the structure). The stress concentration may be due to defects such as nicks, scratches, tool marks and initial stresses or cracks from forming or heat treating operations.

NOTE

An increase in sheet thickness alone is usually beneficial but does not necessarily remedy the conditions leading to cracking. Patch type repairs are generally employed and are usually satisfactory in restoring the original material strength characteristics.

19-50. SEVERELY BENT, KINKED OR TORN CHANNELS. If practical, severely bent, kinked or torn portions of bulkheads should be removed and a replacement section installed and joined at the original splice joint. If this is not justified, cutting away the damaged portion and inserting a trimmed portion of the original section, adequately reinforced by splice plates or doublers, will prove satisfactory. This is known as an insertion type repair.

19-51. DAMAGED FITTINGS. Damaged fittings should not be repaired but should be replaced in their entirety. In some instances, in certain fittings where low stress intensity is encountered, it may prove satisfactory to manufacture a replacement unit, provided the new parts are of the same material thickness and characteristics and direction of grain and bend radii is duplicated.

Figure 19-15 has been deleted. See paragraph 19-9A.

SHOP NOTES:

19-52. LANDING GEAR BULKHEAD ASSEMBLIES. Standard sheet metal repair practices may be used to repair damage to landing gear bulkhead assemblies. In making such repairs, however, good workmanship is of particular importance since the landing gear bulkheads may be heavily loaded in a hard landing. Elongated holes, double holes, and insufficient edge distances must be avoided. Nicks and scratches on the forgings concentrate stresses and therefore should be dressed out, and the dressed area primed with zinc chromate primer to prevent corrosion. Cracked or damaged forgings must be replaced.

19-52A. REPLACEMENT OF HI-SHEAR RIVETS with close-tolerance bolts or other commercial fasteners of equivalent strength properties is permissible. Holes should not be elongated and the Hi-shear substitute should be a smooth push fit. Forgings may be spot-faced the least amount necessary for proper seating of the fasteners.

19-52B. FIREWALL DAMAGE may be repaired by removing the damaged material and splicing in a new section of the material. The new portion should be lapped over the old material, sealed with EC-539 compound or equivalent, and secured with stainless steel rivets. Damaged or deformed angles and stiffeners should be replaced. A severely damaged firewall should be replaced as a unit.

19-53. REPLACEMENT OF PORTIONS OF SKIN PANELS. In case metal skin is damaged extensively, repairs should be made by replacing an entire sheet panel from one structural member to the next. The repair seams should be made to lie along stiffening members, bulkheads, stringers, and the like. Each seam should be made exactly the same in regard to rivet size, spacing, and rivet pattern as the parallel manufactured seams at the edges of the original sheet.

SHOP NOTES:

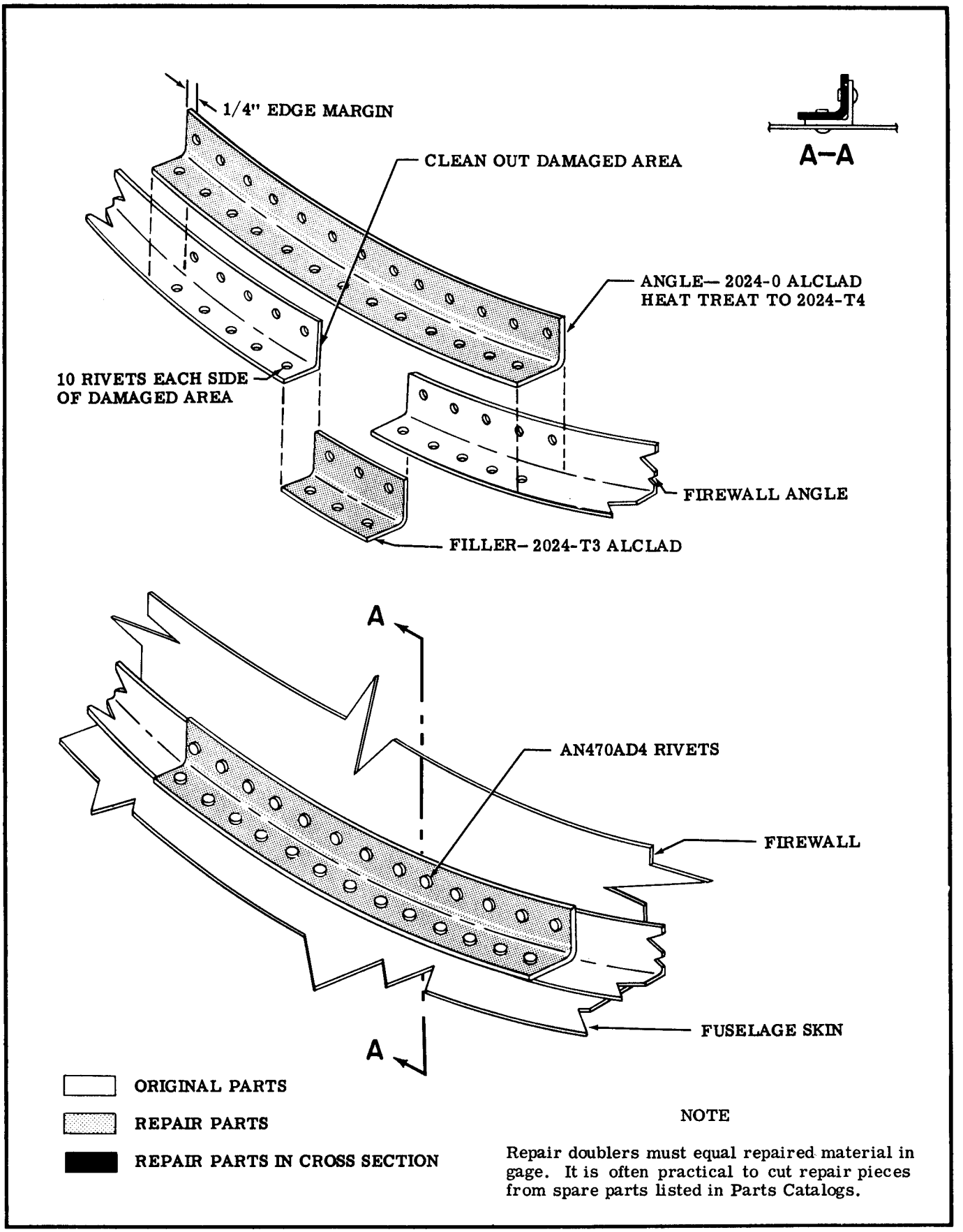

Figure 19-16. Firewall Angle Repair

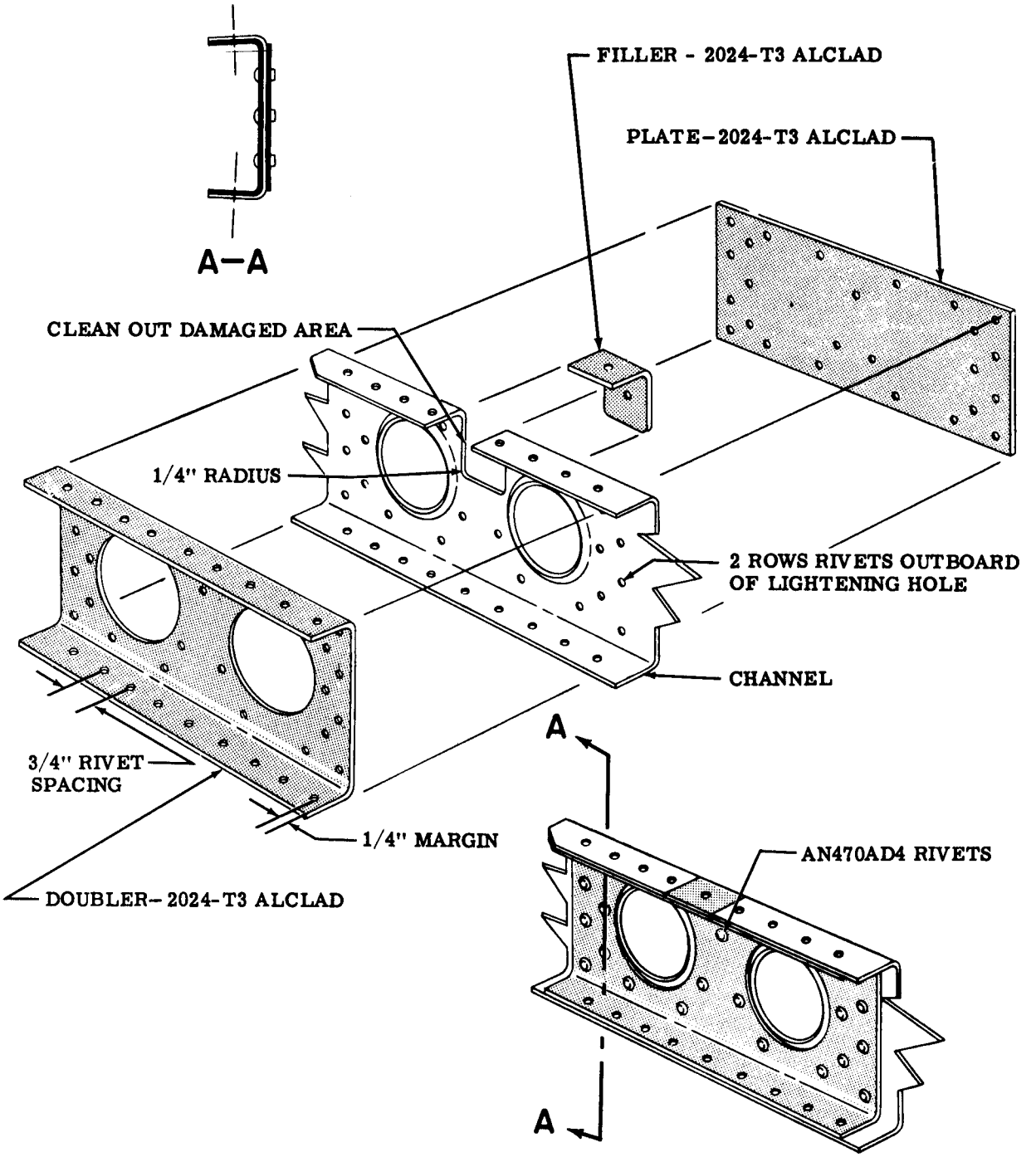

ORIGINAL PARTS

REPAIR PARTS

REPAIR IN CROSS SECTION

NOTE

Repair doublers must equal repaired material in gage. It is often practical to cut repair pieces from spare parts listed in Parts Catalogs.

Figure 19-17. Channel Flange Repair

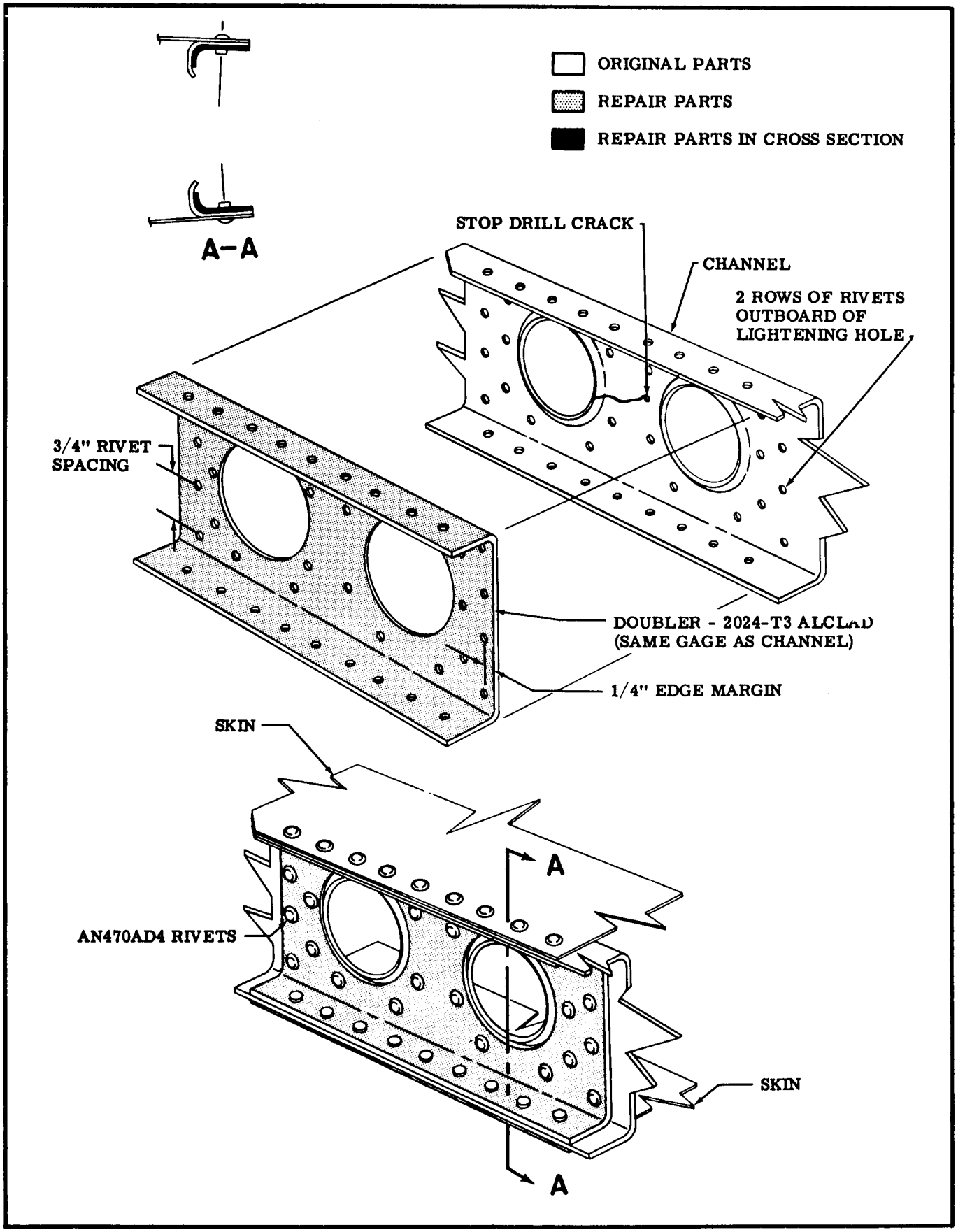

Figure 19-18. Channel Repair

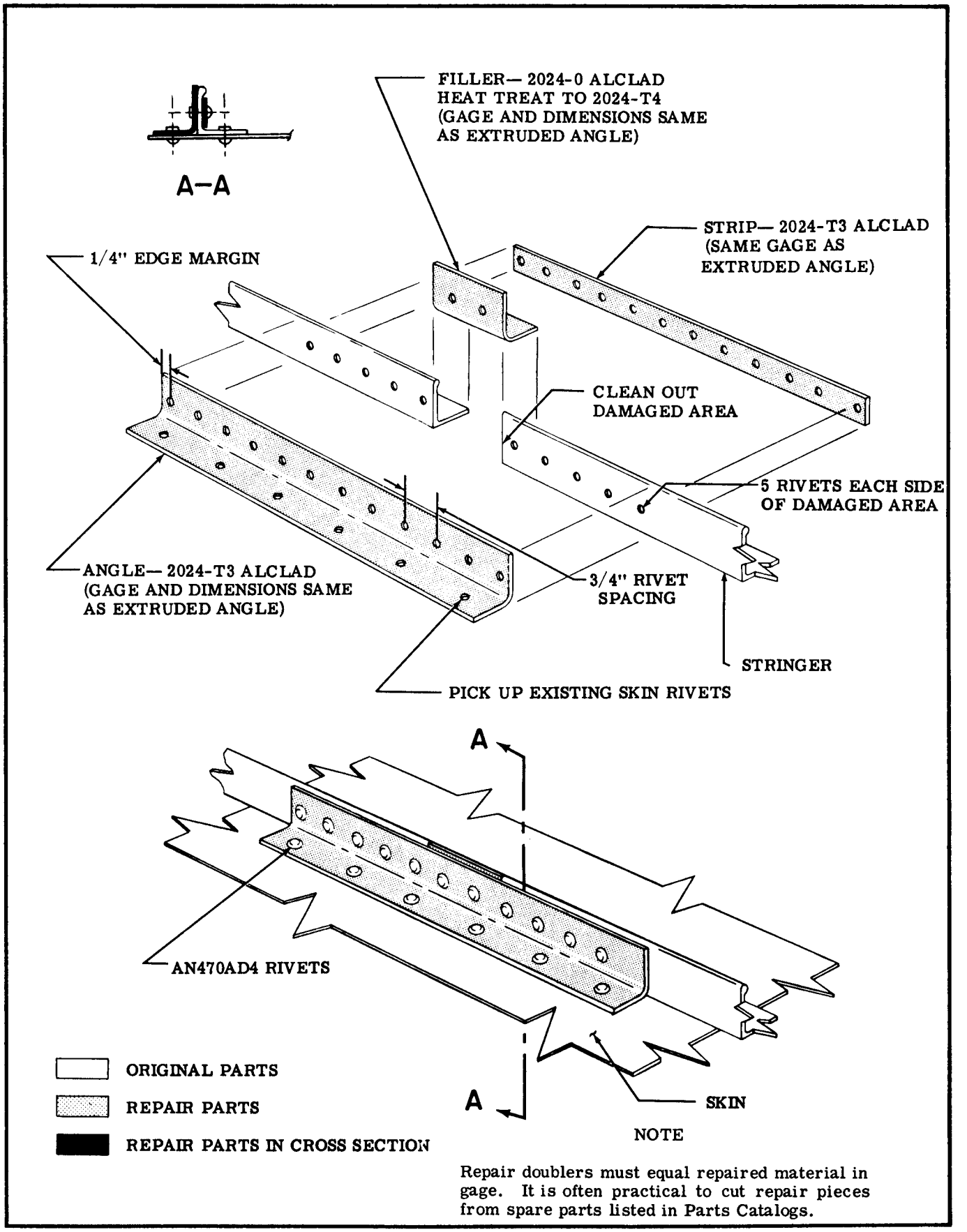

Figure 19-19. Stringer Repair

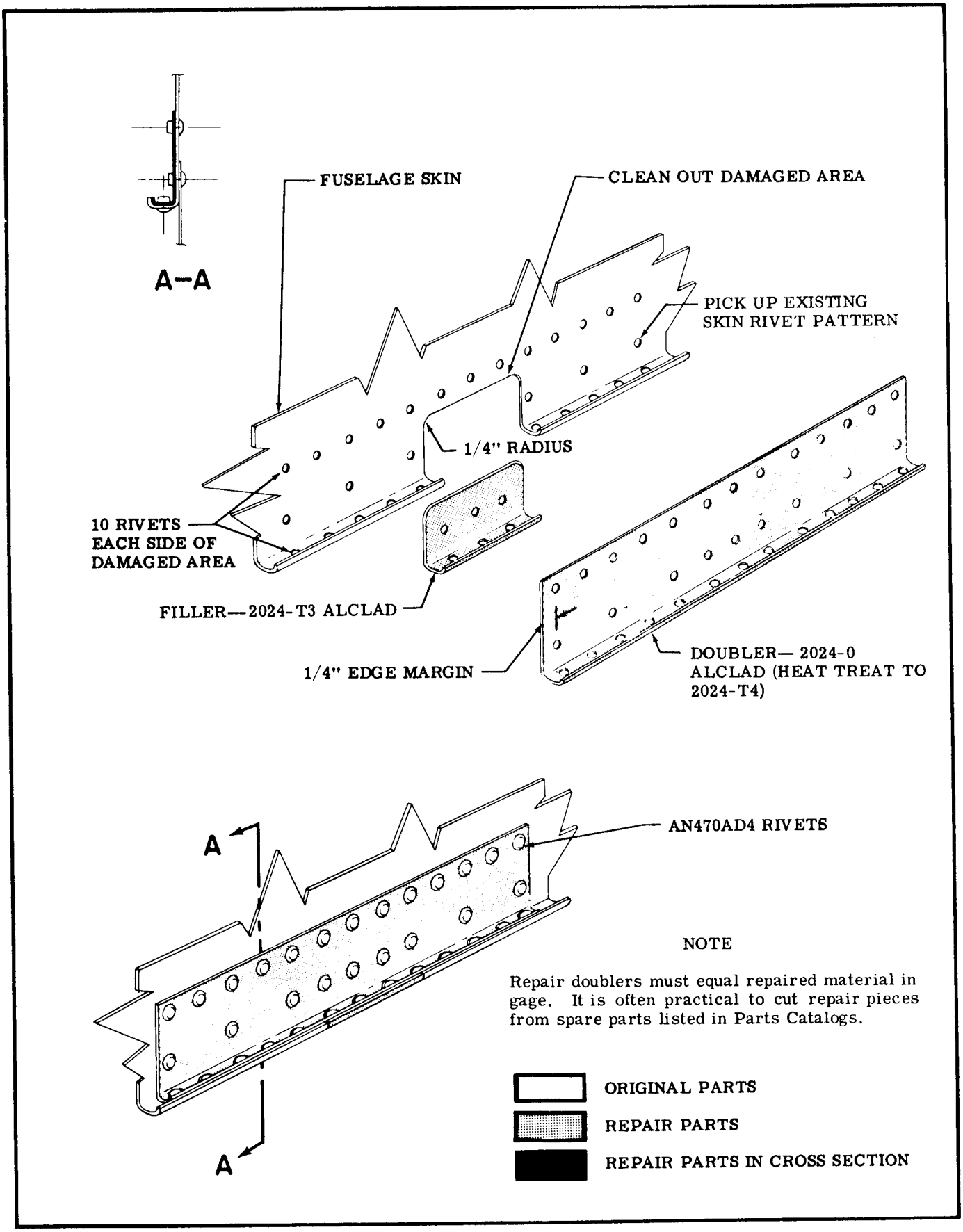

Figure 19-20. Fuselage Skin Flange Repair

19-54. ENGINE MOUNT.

19-55. DESCRIPTION. The mount for the aircraft engine is constructed of 4130 chrome-molybdenum steel tubing. A truss structure, fastened to the firewall at four points, supports a cradle arrangement. This cradle arrangement, with its supporting lugs, forms the base for rubber shock mounted engine supports.

19-56. GENERAL CONSIDERATIONS. All welding on the engine mount should be of the highest quality since the tendency of vibration is to accentuate any minor defect present and cause fatigue cracks. Engine mount members are preferably repaired by using a large diameter replacement tube, telescoped over the stub of the original member using fishmouth and rosette type welds. However, reinforced 30-degree scarf welds in place of the fishmouth welds are considered satisfactory for engine mount repair work.

19-57. ENGINE MOUNT SUPPORT CRADLE DAMAGE. Minor damage such as a crack adjacent to an engine attaching lug may be repaired by rewelding the cradle tube and extending a gusset past the damaged area. Extensively damaged parts should not be repaired but should be replaced.

19-58. DAMAGE INVOLVING ENGINE MOUNTING LUGS AND ENGINE MOUNT TO FUSELAGE ATTACHING FITTINGS. Engine mounting lugs and engine mount to fuselage attaching fittings should not be repaired but should be replaced.

19-59. BAFFLES.

19-60. CONSIDERATIONS. Baffles ordinarily should be replaced if damaged or cracked. However, small plate reinforcements riveted to the baffle will often prove satisfactory both to the strength and cylinder cooling requirements of the unit.

19-61. ENGINE COWLING.

19-62. REPAIR OF COWLING SKINS. If extensively damaged, complete sections of cowling should be replaced. Standard insert-type skin patches, however, may be used if repair parts are formed to fit. Small cracks may be stop-drilled and dents straightened, if they are reinforced on the inner side with a doubler of the same material.

19-63. REPAIR OF REINFORCEMENT ANGLES. Cowl reinforcement angles, if damaged, should be replaced. Due to their small size they are easier to replace than to repair.

19-64. ROYALITE REPAIRS.

19-65. Repair of puncture or holes in Royalite can be made by trimming out the damaged area and installing an overlapping, beveled, or flush Royalite patch. Doublers may be installed behind the patch where additional strength is desired. Acetone, or any commercially available cohesive for Royalite, may be used as the bonding agent. Moderate pressure is recommended for best results. Curing time will vary with the agent used, but repairs should not be stressed until fully cured. Cracks can be repaired by saturating the crack itself with the cohesive, then filling with an epoxy filler or a paste made of Royalite shavings and the cohesive. Again, the crack may be reinforced with a doubler on the back side for additional strength. After the repair has been made, the area may be sanded smooth and painted if desired.

19-66. FIBERGLAS REPAIRS.

19-67. Fiberglas items on the aircraft may be repaired as stipulated in instructions furnished in SK182-12. Observe the resin manufacturer's recommendations concerning mixing and application of the resin. Epoxy resins are preferable for making repairs, since epoxy compounds are usually more stable and predictable than polyester, and in addition give better adhesion.

SECTION 20

PAINTING

TABLE OF CONTENTS

	Page
PAINTING	20-1
ENMAR 27H SERIES LACQUER	20-1
Preparation	20-1
Mixture and Application of Primer	20-1
Preparation of Lacquer Colors	20-1
Application of Lacquer Colors	20-1
ENMAR 82A SERIES VINYL	20-1
Initial Preparation	20-1
Mixture and Application of Primer	20-2
Preparation of Vinyl Colors	20-2
Application of Vinyl Colors	20-2
HI-VISIBILITY PAINT	20-3
Materials	20-3
Mixing	20-3
Surface Preparation	20-3
Application	20-3
FIBERGLAS SPEED FAIRINGS	20-3

20-1. PAINTING an airplane requires little special equipment. The average shop will have the compressor, spray gun and clean place to work required for a good paint job. Ordinarily, painting involves three basic steps. They are:

1. Cleaning - Washing down the aircraft thoroughly to remove all oil, grease, and dirt.
2. Priming - Applying one priming coat before painting with vinyl and an extra intermediate priming coat before painting with lacquer.
3. Painting - Applying three or more coats of final paint, then adding decorative stripes.

20-2. PROCEDURE FOR PAINTING WITH ENMAR 27H SERIES LACQUER.

20-3. PREPARATION. Thoroughly clean all surfaces, beyond area to be painted, with 3094 thinner. Extreme care should be taken to remove all letters, grease, bugs, etc. Mask off stripe areas to be painted carefully - see that all tapes are firmly adhered to metal to prevent ragged edges. Class "A" wrapping paper and thinner proof masking tape should be used to cover the Plexiglas area. This will prevent damage from solvent and thinner vapors. (Newspapers will not provide adequate protection.)

20-4. MIXTURE AND APPLICATION OF PRIMER.

NOTE

Mix EX2016 primer only in quantities required for use within six hours and then only in stainless steel bucket provided.

a. Mix EX2016 primer and EX2016C reducer in a 1:1 ratio and stir thoroughly.
b. Apply EX2016 primer in a well broken up, wet, even coat.
c. Mix EX2414 yellow lacquer primer and MIL-T-6094A thinner in equal parts.
d. Apply two well broken up, wet, even coats of lacquer primer over the EX2016 as an intermediate coat.

20-5. PREPARATION OF 27H LACQUER COLORS.
a. Thoroughly stir and mix in original container to make sure all pigments are in solution.
b. Thin required amount of lacquer color with T-1866 thinner in a 1:1 ratio. Mix thoroughly and strain into cups before using.

NOTE

T-1866A is faster drying than T-1866B. The former is primarily for lacquer, although the "B" may be mixed with the "A" to slow down the drying time if desired.

20-6. APPLICATION OF 27H LACQUER COLORS. Apply three well broken, wet, even coats of lacquer color. Air pressure at the gun should not exceed 40 pounds. At all times, keep gun from 6 to 8 inches from the work and perpendicular to surfaces being painted. DO NOT PAINT WITH ARCING MOTION. Keep paint room around 75 to 80°F. Burn down with T-1411 thinner to give smooth, even surfaces free from overspray.

20-7. PROCEDURE FOR PAINTING WITH ENMAR 82 SERIES VINYL.

NOTE

82A and 82 are interchangeable, although 82A has better flow characteristics.

20-8. INITIAL PREPARATION. Thoroughly clean all surfaces and seams with 3094 lacquer thinner. Extreme care should be taken to assure that no oil seepage occurs from seams, splices or rivet heads. All bugs and foreign matter should be removed from

airplane before painting. Thoroughly inspect after cleaning to be sure all surfaces are ready for priming. Class "A" wrapping paper and thinner proof masking tape should be used to cover the Plexiglas area. This will prevent damage from solvent and thinner vapors. (Newspapers will not provide adequate protection.)

20-9. PRIMER - MIXTURE AND APPLICATION.

NOTE

Mix EX2016 primer only in quantities required for use within six hours and then only in stainless steel bucket provided.

a. Mix equal parts of EX2016 primer and EX2016C reducer and stir thoroughly.
b. Apply EX2016 primer in a well broken up, wet, even coat. If primer has to be sanded, sand and reprime. Sanding breaks film, resulting in poor adhesion.

NOTE

On all leading edge surfaces, apply cross coat, wet and even, of EX2016 primer.

c. Clean equipment immediately after use and under no consideration use EX2016 that has been mixed longer than six hours.

20-10. PREPARATION OF 82 SERIES VINYL ENAMEL COLORS. Thoroughly mix and stir in original container and make sure all pigments are in solution. Thin required amount of vinyl color with T-1866 vinyl thinner in a 1:1 ratio. Mix thoroughly and strain into either a cup or pressure pot.

20-11. APPLICATION OF 82 SERIES VINYL COLORS.

NOTE

If vinyl is to be applied from pressure pot, do so under following conditions: Pressure of 10 pounds. Regulate gun pressure at gun with test gauge to 25 pounds, using gun with FX needle and fluid tip, with fan set wide open and yield two turns open. If cups are used, set gun at 30 pounds with EX needle and fluid, tip, fan set one turn open and yield wide open.

a. Apply first coat even and wet; second and third coats in same manner.
b. Check carefully before second and third coats for defects and correct before final coats.
c. On second and third colors, mask off and lightly sand with 400 paper the painted surfaces of previous color that is in area to be painted.

NOTE

On all leading edges apply a fourth coat. After finishing each color coat, burn down with T-1411 burn down thinner. Remove all masking from painted surfaces after each color application. If you have a Heat Room, turn up the heat and dry paint at temperatures of 125 to 145°F., for at least three hours. Heat will give a very good reflow on vinyl paint.

SHOP NOTES:

20-12. PROCEDURE FOR APPLICATION OF HI-VISIBILITY PAINT.

20-13. MATERIALS REQUIRED are:

3 qts Switzer Orange Day-Glo

2 qts Toluene Thinner

2 qts Switzer Filteray, Type B Top Coat

2 qts Xylene Thinner

2 qts White Base Coat, Enmar 82A or 27H

2 qts Thinner, T-1866

20-14. MIXING PROCEDURE: All paint shall be thinned to spraying consistency as follows:
a. Hi-Visibility paint shall be thinned with two parts Toluene thinner to three parts paint.
b. Clear top coat shall be thinned with one part Xylene thinner to one part paint.
c. White base coat shall be thinned with one part thinner to one part paint. This formula applies to either lacquer or vinyl.

NOTE

Either Toluene or Xylene may be used as the thinner for Hi-Visibility paint and the top coat. Toluene is recommended for the Hi-Visibility paint and Xylene for the top coat.

20-15. SURFACE PREPARATION. Hi-Visibility paint must be applied over a good white undercoat. The preferred white undercoat is white lacquer. If, however, the airplane is already painted with vinyl base paint, the white undercoat may consist of white vinyl. A white primer may also be used as the undercoat.

20-16. APPLICATION.
a. Apply three well broken even coats of white undercoat. Allow sufficient drying time. Wipe with tack rag.
b. Apply one heavy wet coat of Hi-Visibility paint. This coat should consist of three wet passes over the entire area. Allow two or three minutes drying time between passes. Dry coat should be 2.5 to 3.5 mils thick. Allow one to two hours drying time.
c. Wipe surface with tack rag to remove overspray.
d. Apply two wet coats of clear top coat, consisting of two passes per coat. Dry coat should be 1.5 to 2.5 mils thick.

20-17. REFINISHING OF FIBERGLAS SPEED FAIRINGS. Main wheel speed fairings are painted with a lacquer base coat with lacquer stripes on all models except the Skylane and Skylark which have a vinyl base coat with lacquer stripes. Beginning in 1961, however, all main wheel speed fairings have a lacquer base coat and lacquer stripes.

Nose wheel speed fairings prior to 1959 had a base coat of lacquer or vinyl, the same as the base coat on the main speed fairings. Beginning with 1959 models, a base coat of white epoxy was used on all except the Model 150 nose fairing, which has a lacquer base coat and lacquer stripes for all serials. Beginning in 1961, all nose wheel speed fairings, except the 150, are epoxy. During 1958, a top coat of clear epoxy was applied for protection against fuel, hydraulic fluid, and lubricants. A few early 1959 Model 172 nose fairings had a base coat of white lacquer instead of white epoxy; where repainting is required, use the white epoxy.

NOTE

In most cases refinishing or retouching of fiberglas speed fairings will require the removal of all the finish down to the primer surfacer. However, if the damage is local and the work is carefully done, the "spotting in" method may be used.

a. To remove fuel stains or damage, the finish must be removed as deep as the fuel has penetrated. Do not attempt to finish over fuel damaged area, as the fuel will bleed through. In case of yellowed finish, all finish must be removed. If the fiberglas has been repaired, the repair shall be sanded smooth.
b. Nose wheel speed fairings should be finished with colored epoxy. The epoxy finishes are very difficult to remove with thinner or solvent and must be sanded or a paint remover, such as Turco Paint-Gon, must be used. If the finish has been removed until the bare fiberglas has been exposed, it must be refinished with an automotive type primer surfacer or special fiberglas primer surfacer and sanded smooth.
c. After the area being spotted or the whole speed fairing has been sanded and edges of the old finish feathered, it should be finished in the usual manner with lacquer, vinyl or epoxy colors as required. The nose wheel fairing should be painted with colored epoxy after the other materials have dried. An epoxy coat is impervious to gasoline softening or discoloration after 36 to 48 hours.

NOTE

Repair of speed fairings is covered in SK182-12.