Sheet: LMS8001 Power Supply

File: LMS8001_PowerSupply.sch

Sheet: USB_microcontroller

File: USBcontr.sch

Sheet: Power Supply

File: PowerSupply.sch

Sheet: Clocks

File: Clocks.sch

Sheet: RF

File: RF.sch

Lime Microsystems

Sheet: /

File: LMS8001_Companion.sch

Title: LMS8001_AppPCB

Size: A4	Date: 11 oct 2017	**Rev: 1v0**
KiCad E.D.A. kicad 4.0.7-e2-637658ubuntu16.04.1		Id: 1/6

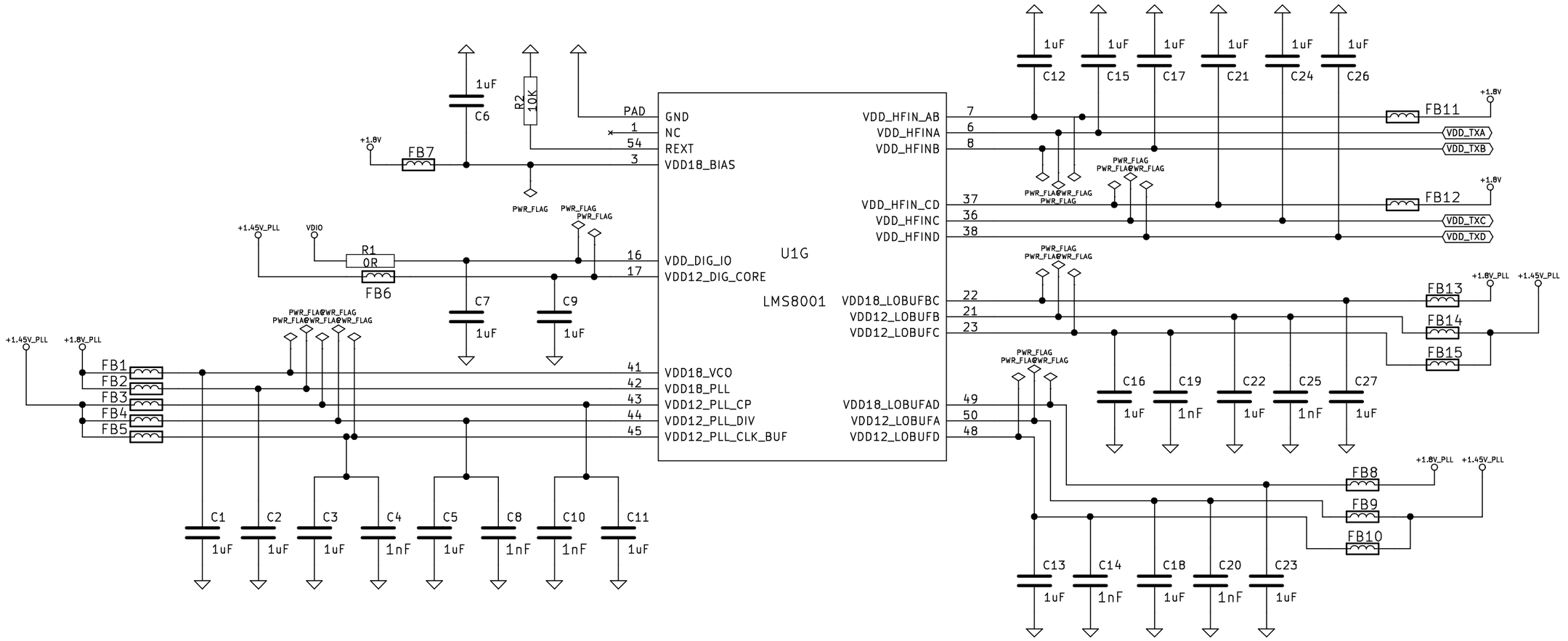

Lime Microsystems	
Sheet: /LMS8001 Power Supply/ File: LMS8001_PowerSupply.sch	
Title: LMS8001_AppPCB	
Size: A4 | Date: 11 oct 2017	**Rev: 1v0**
KiCad E.D.A. kicad 4.0.7-e2-637658ubuntu16.04.1	Id: 2/6

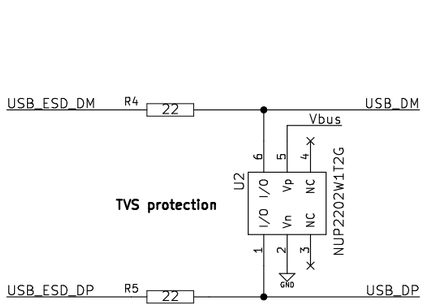

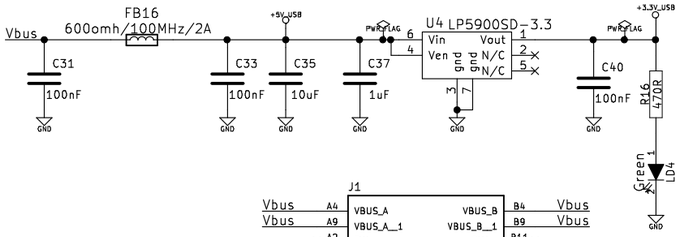

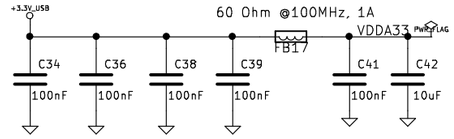

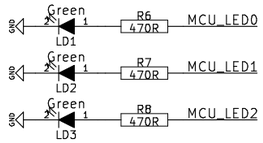

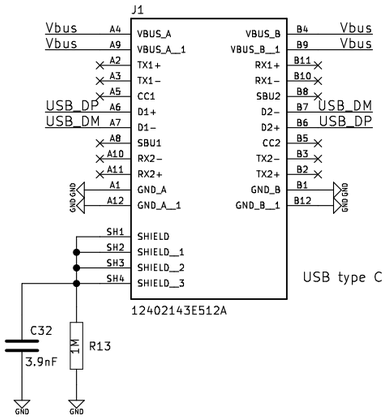

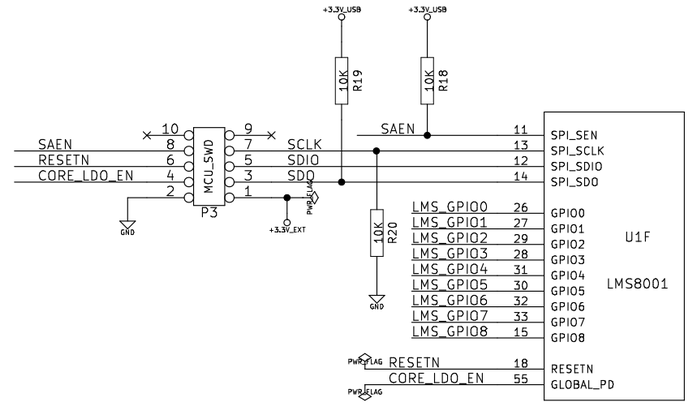

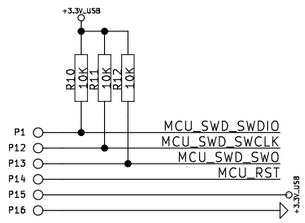

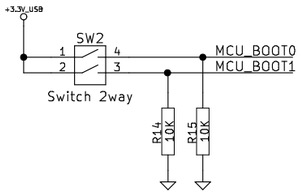

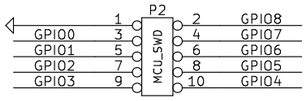

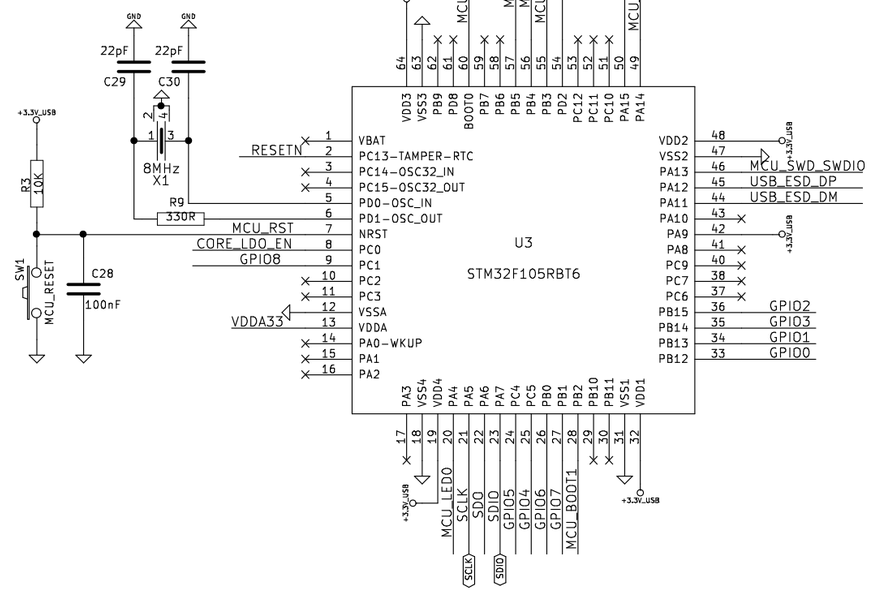

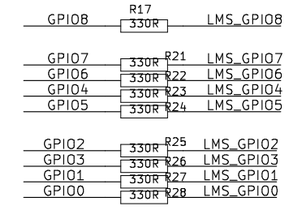

Lime Microsystems

Sheet: /USB_microcontroller/
File: USBcontr.sch

Title: LMS8001_AppPCB

Size: A3	Date: 11 oct 2017	**Rev: 1v0**
KiCad E.D.A. kicad 4.0.7-e2-637658ubuntu16.04.1		Id: 3/6

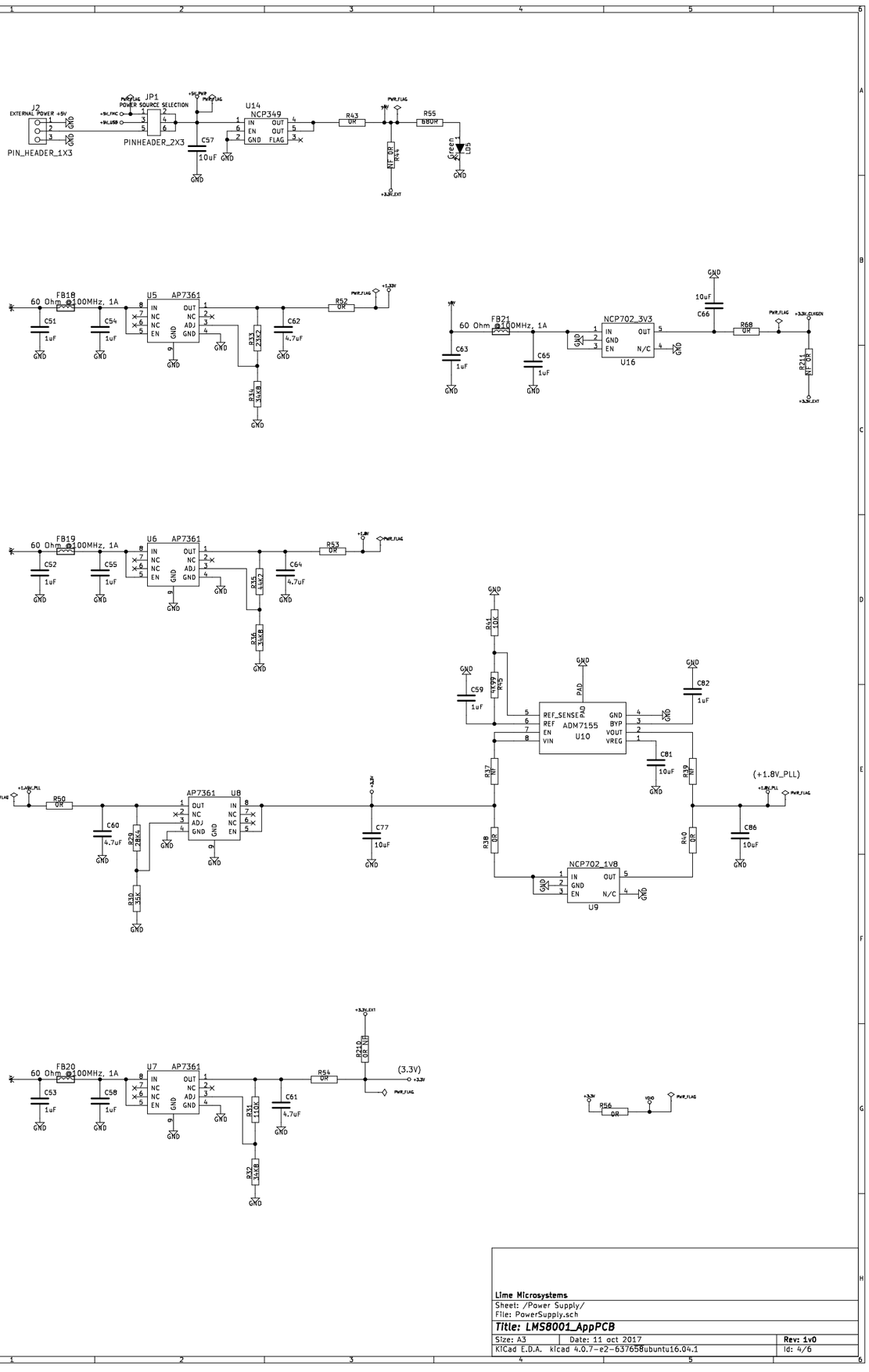

Lime Microsystems

Sheet: /Power Supply/

File: PowerSupply.sch

Title: LMS8001_AppPCB

Size: A3	Date: 11 oct 2017	**Rev: 1v0**
KiCad E.D.A. kicad 4.0.7-e2-637658ubuntu16.04.1		Id: 4/6

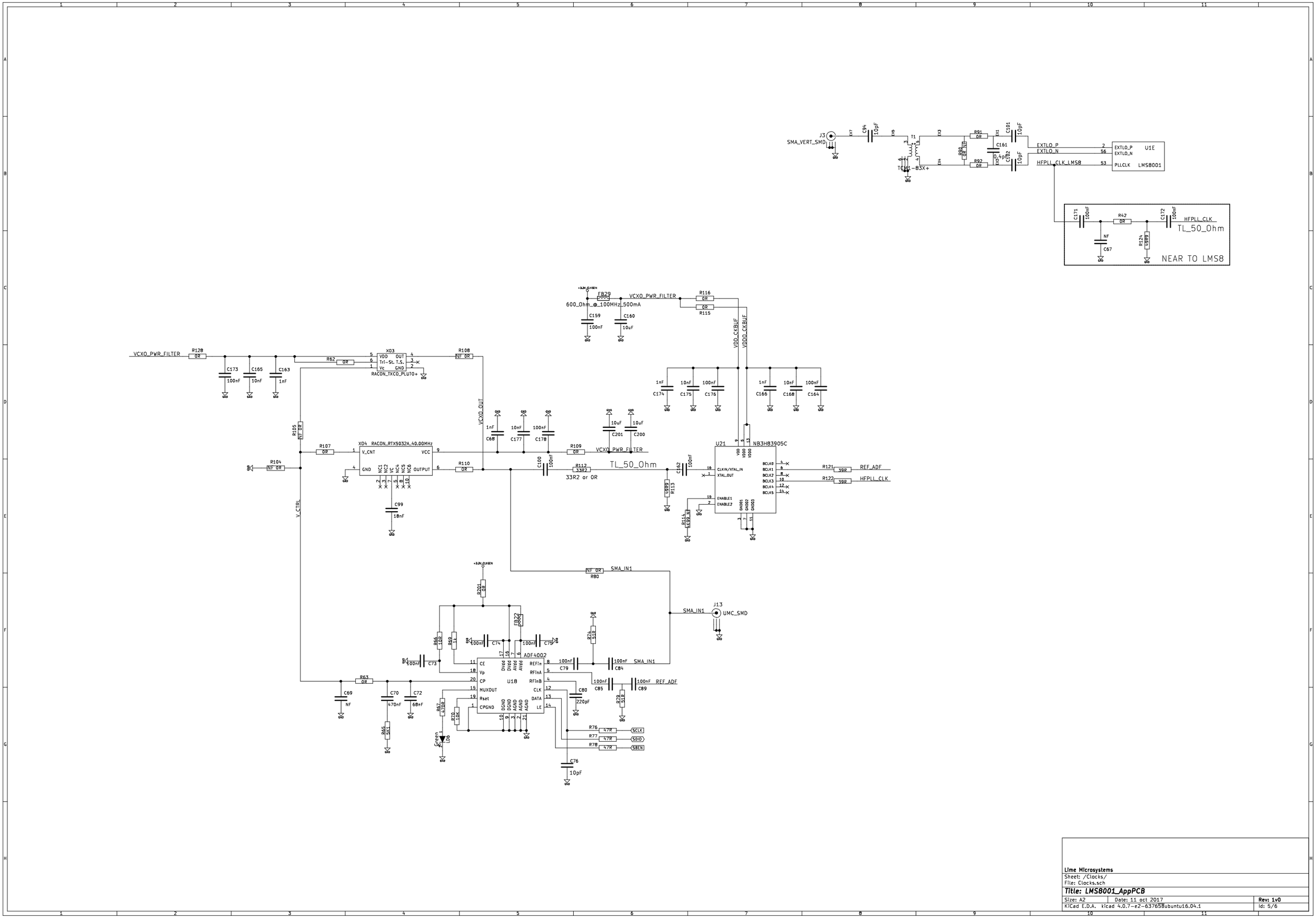

J3
SMA_VERT_SMD
C94
10pF
T1
TCM1-83X+
R91
0R
R90
0R
R92
0R
C161
0.4p
C101
10pF
C102
10pF
EXTLO_P
EXTLO_N
HFPLL_CLK_LMS8
EXTLO_P
EXTLO_N
PLLCLK
U1E
LMS8001
C171
100nF
R42
0R
C172
100nF
HFPLL_CLK
TL_50_Ohm
NF
C67
R124
49R9
NEAR TO LMS8
FB29
600_Ohm_@_100MHz_500mA
C159
100nF
C160
10uF
VCXO_PWR_FILTER
R116
0R
R115
VDD_CKBUF
VDDO_CKBUF
R128
0R
C173
100nF
C165
10nF
C163
1nF
R62
0R
X03
VDD
OUT
Tri-St. T.S.
Vc
GND
RACON_TXCO_PLUTO+
R108
NF 0R
C174
1nF
C175
10nF
C176
100nF
C166
1nF
C168
10nF
C164
100nF
VCXO_OUT
C68
1nF
C177
10nF
C178
100nF
C201
10uF
C200
10uF
R105
NF 0R
R107
0R
X04
RACON_RTX5032A_40.00MHz
V_CNT
VCC
GND
OUTPUT
R109
0R
VCXO_PWR_FILTER
R104
NF 0R
R110
0R
C100
100nF
R112
33R2
33R2 or 0R
TL_50_Ohm
C162
100nF
U21
NB3HB3905C
CLKIN/XTAL_IN
XTAL_OUT
ENABLE1
ENABLE2
BCLK0
BCLK1
BCLK2
BCLK3
BCLK4
BCLK5
R121
39R
REF_ADF
R122
39R
HFPLL_CLK
R113
49R9
R114
8K99_NF
C99
18nF
V_CTRL
SMA_IN1
NF 0R
R80
J13
UMC_SMD
R201
0R
FB22
R66
10R
R69
1k
C74
100nF
C75
100nF
C73
100nF
R74
51R
ADF4002
U18
CE
Vp
CP
MUXOUT
Rset
CPGND
REFin
RFinA
RFinB
CLK
DATA
LE
C79
100nF
C84
100nF
SMA_IN1
C85
100nF
C89
100nF
REF_ADF
C80
220pF
R79
51R
R63
0R
C69
NF
C70
470nF
C72
68nF
R67
470R
R70
10K
R65
5K1
Green
LD6
R76
47R
SCLK
R77
47R
SDIO
R78
47R
SBEN
C76
10pF
Lime Microsystems
Sheet: /Clocks/
File: Clocks.sch
Title: LMS8001_AppPCB
Size: A2
Date: 11 oct 2017
Rev: 1v0
KiCad E.D.A. kicad 4.0.7-e2-637658ubuntu16.04.1
Id: 5/6

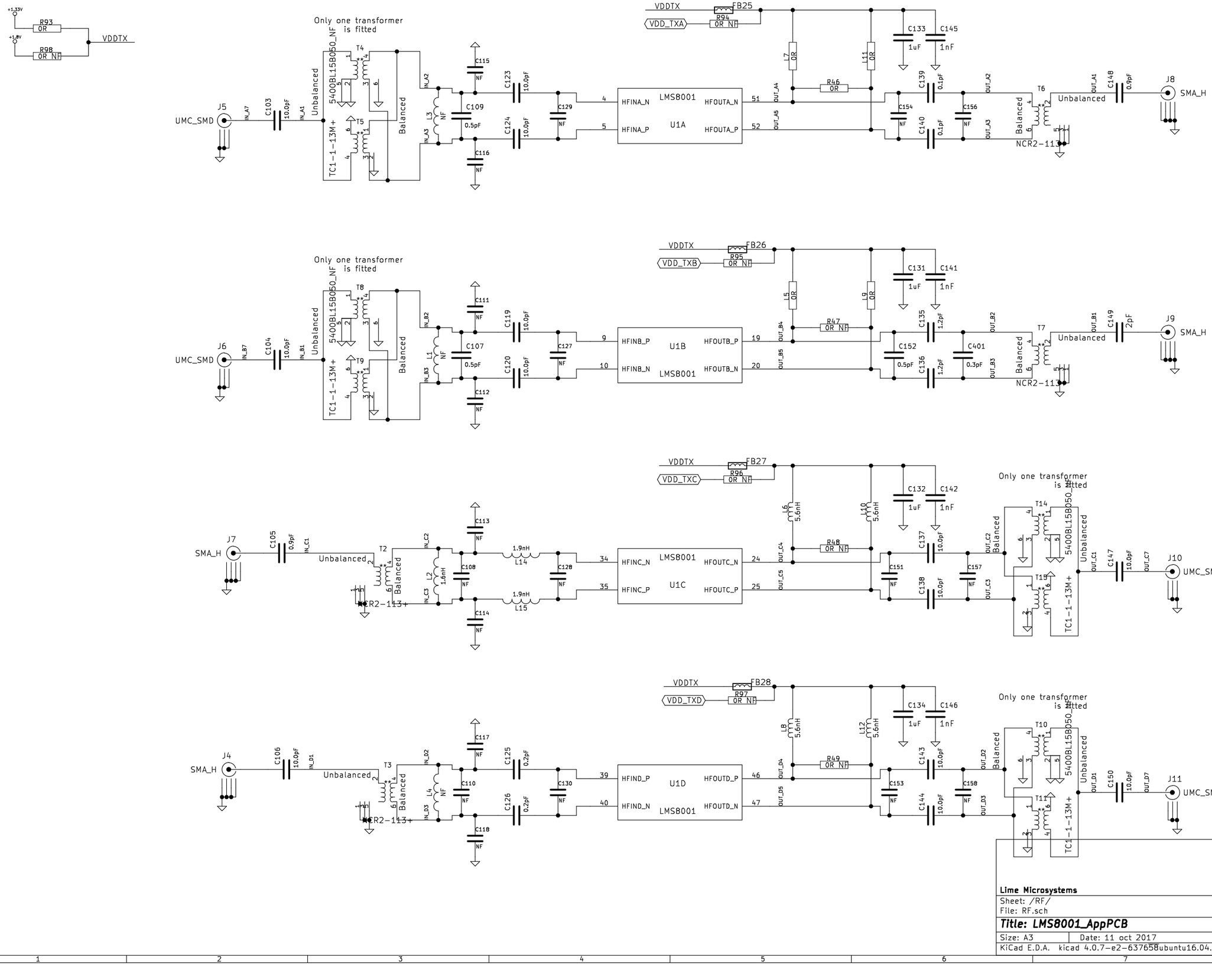

Lime Microsystems

Sheet: /RF/
File: RF.sch

Title: LMS8001_AppPCB

Size: A3	Date: 11 oct 2017	**Rev: 1v0**
KiCad E.D.A. kicad 4.0.7-e2-637658ubuntu16.04.1		Id: 6/6