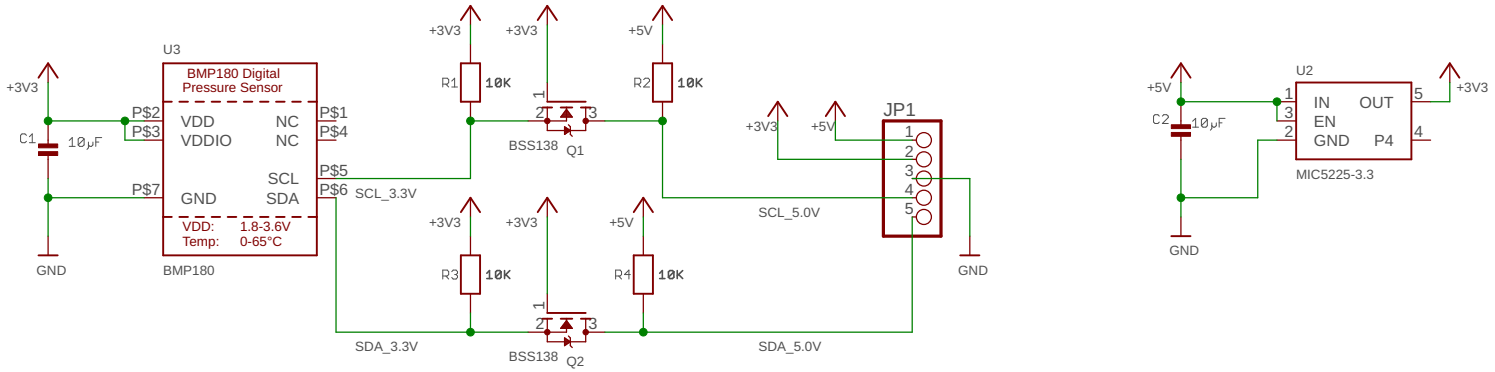

Changes: Added 5.0V translation