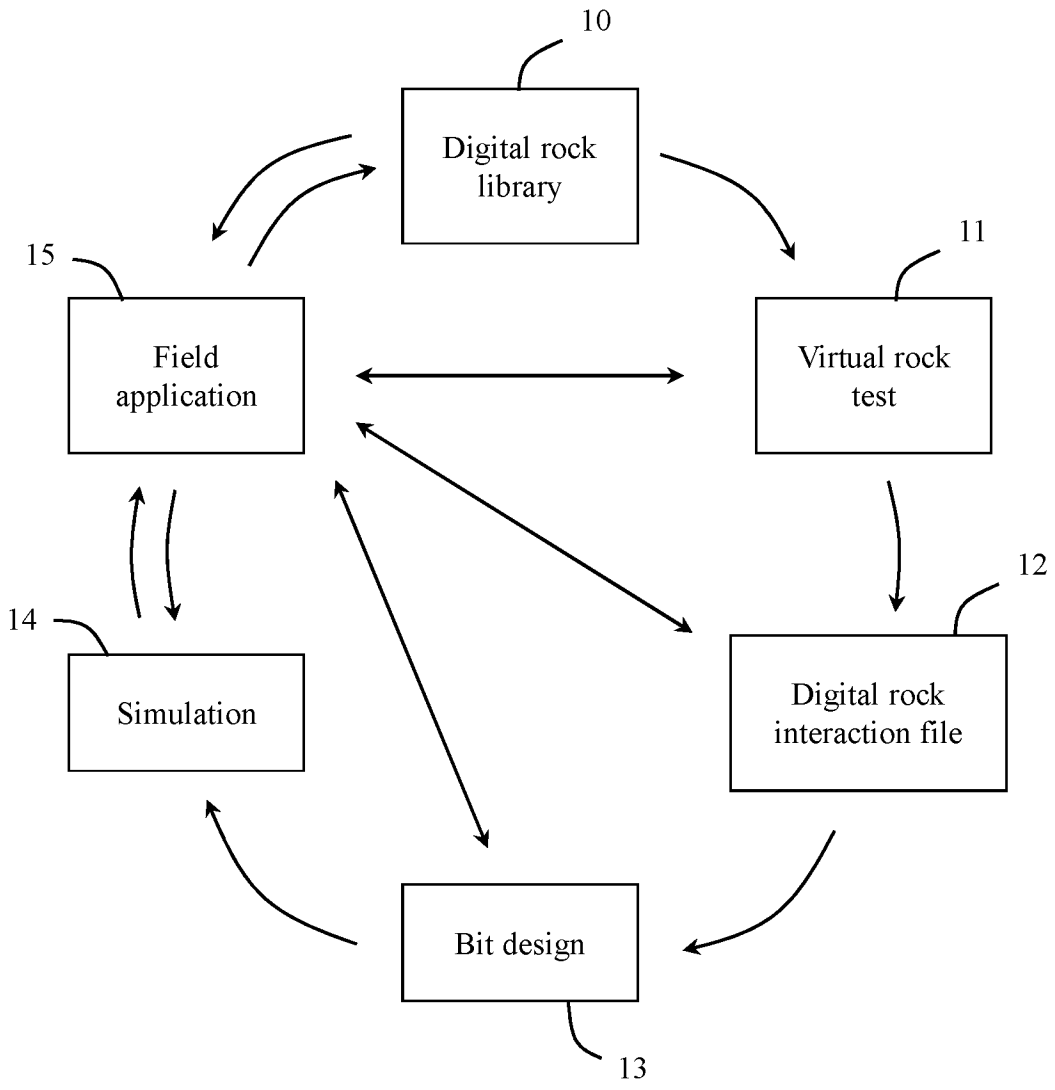
10
Digital rock library
11
Virtual rock test
12
Digital rock interaction file
13
Bit design
14
Simulation
15
Field application

FIG. 1

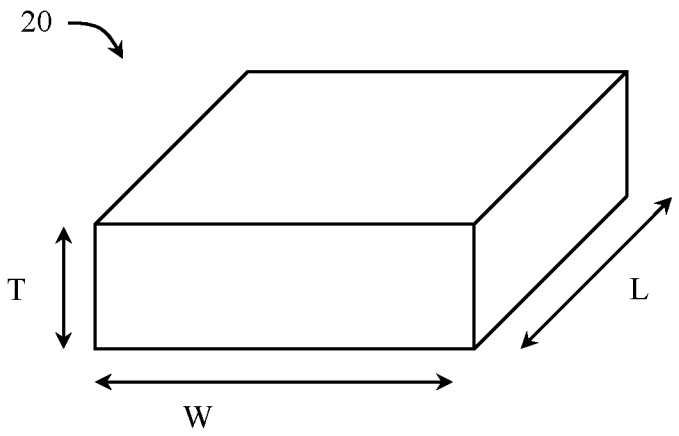

FIG. 2

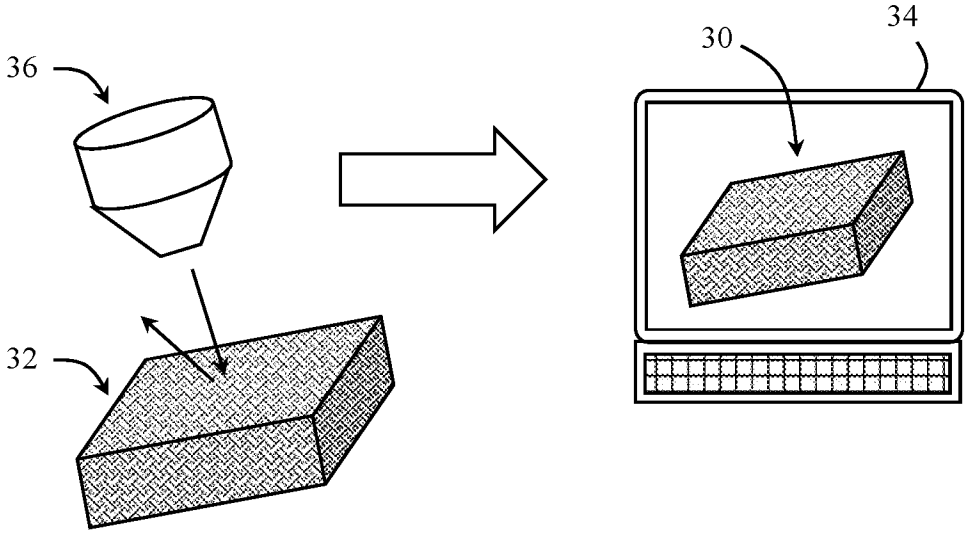

FIG. 3

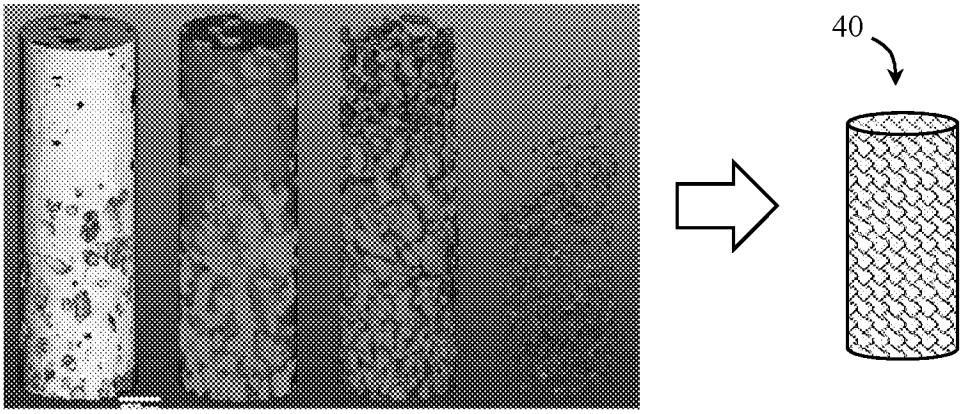

FIG. 4

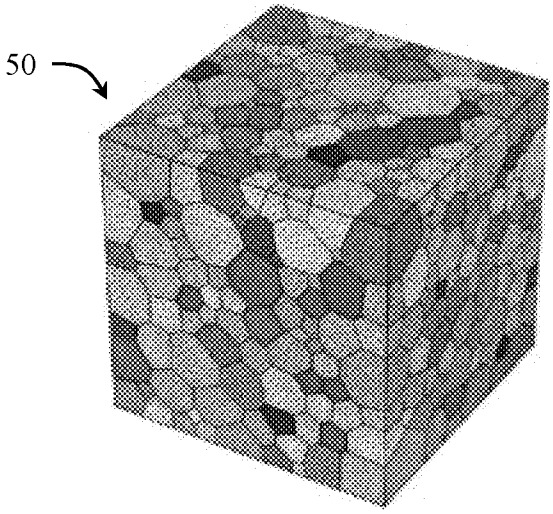

FIG. 5

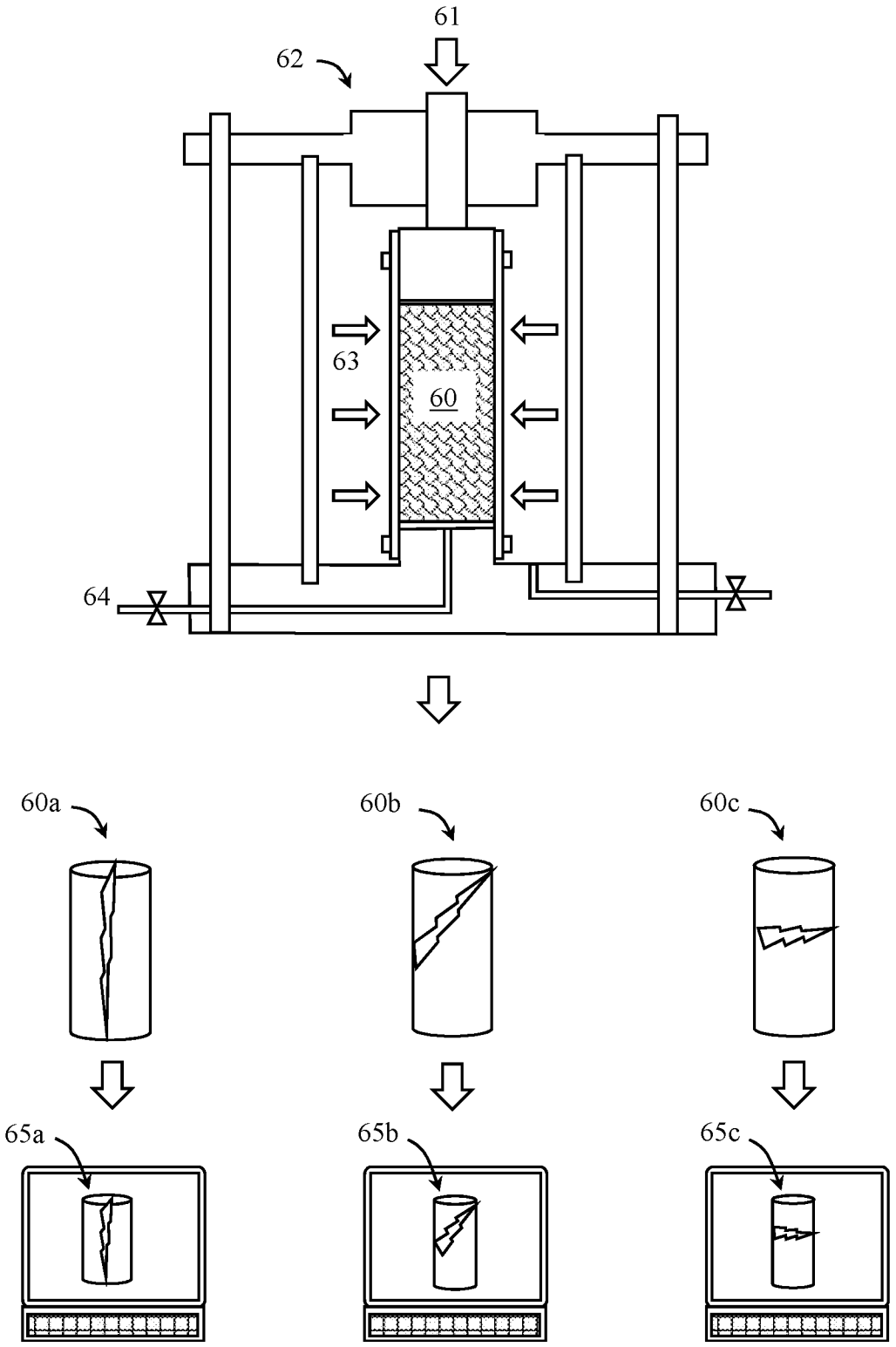

FIG. 6

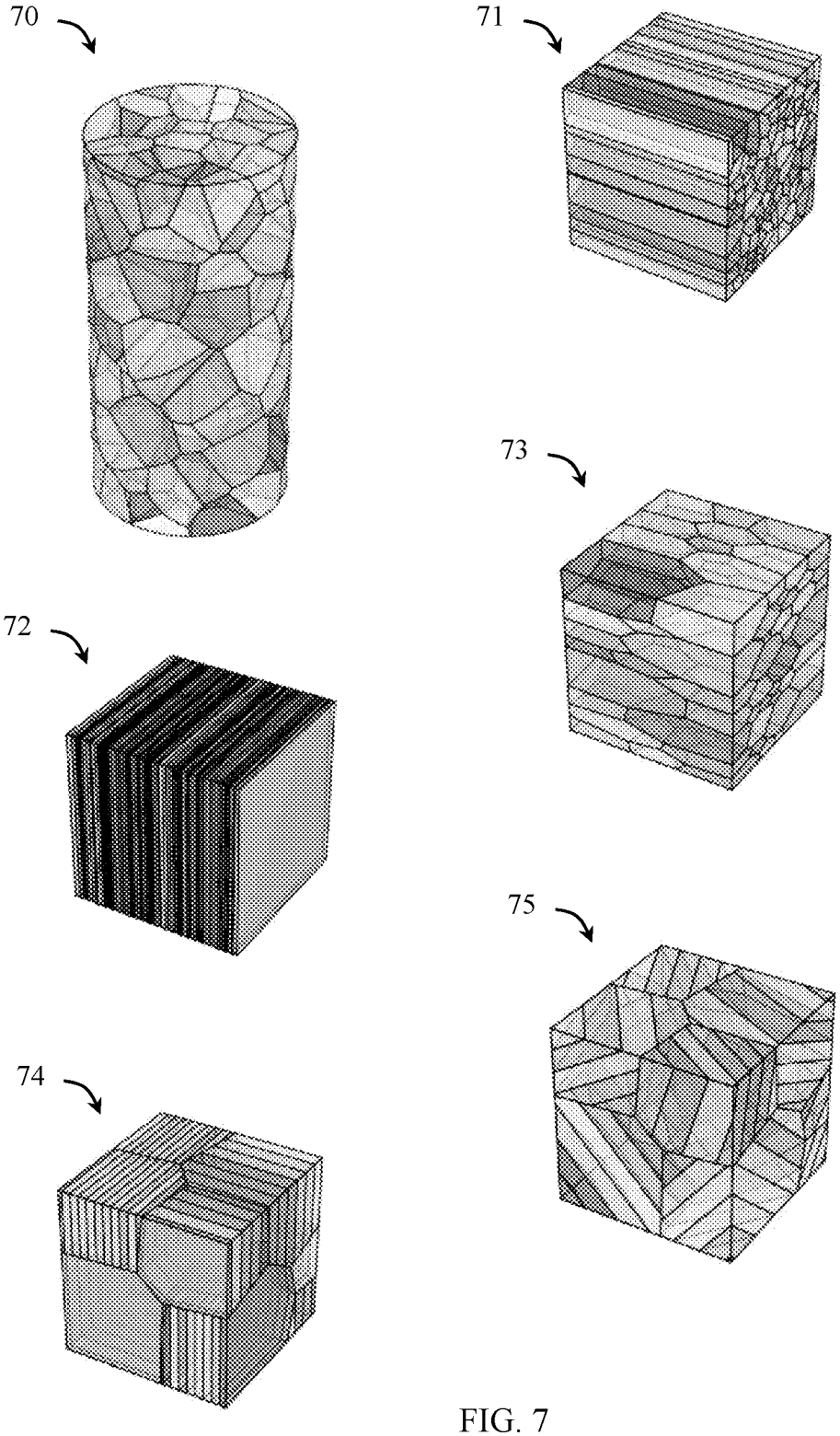

FIG. 7

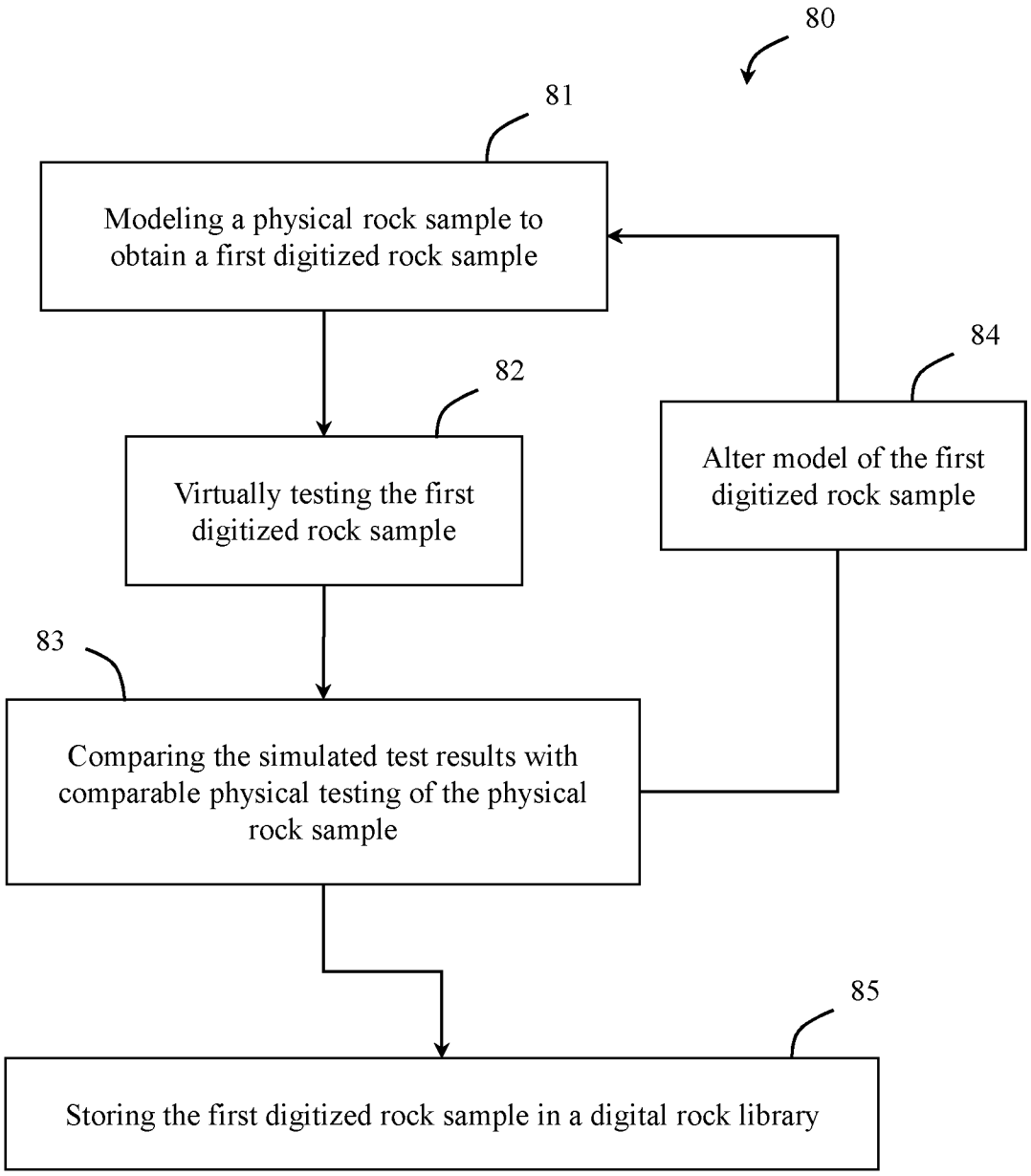
80
81
Modeling a physical rock sample to obtain a first digitized rock sample
82
Virtually testing the first digitized rock sample
84
Alter model of the first digitized rock sample
83
Comparing the simulated test results with comparable physical testing of the physical rock sample
85
Storing the first digitized rock sample in a digital rock library

FIG. 8

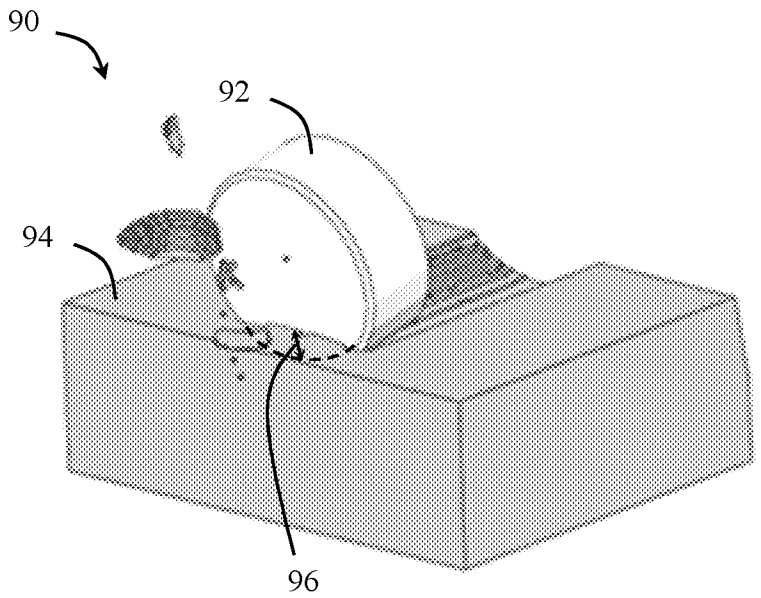

FIG. 9

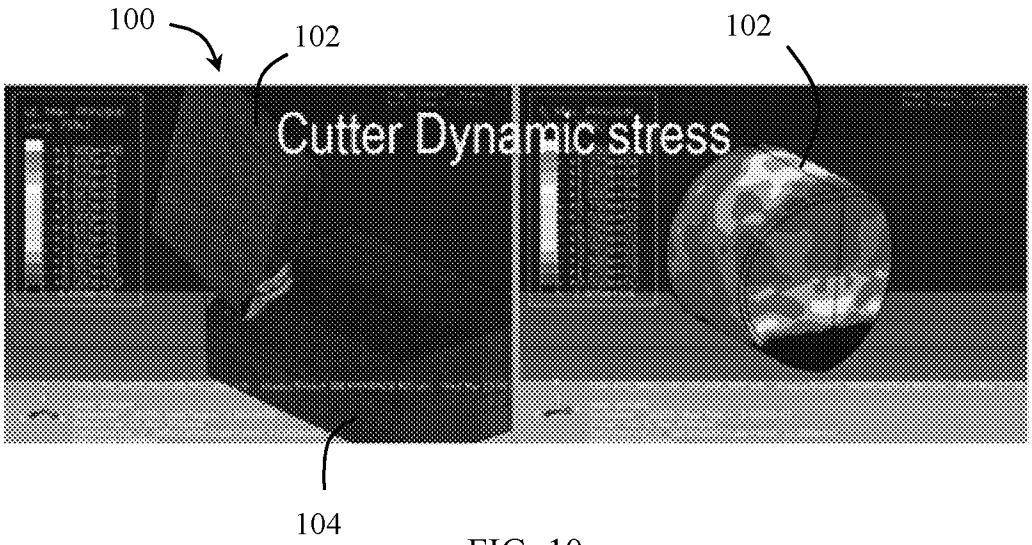

FIG. 10

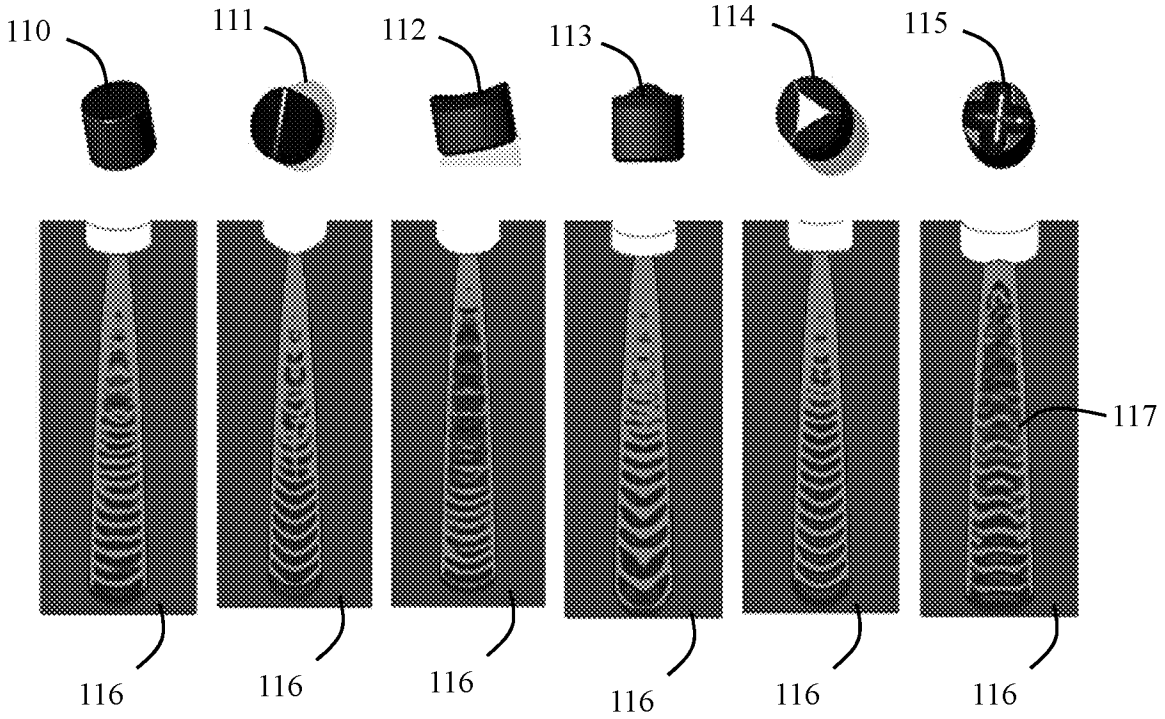

FIG. 11

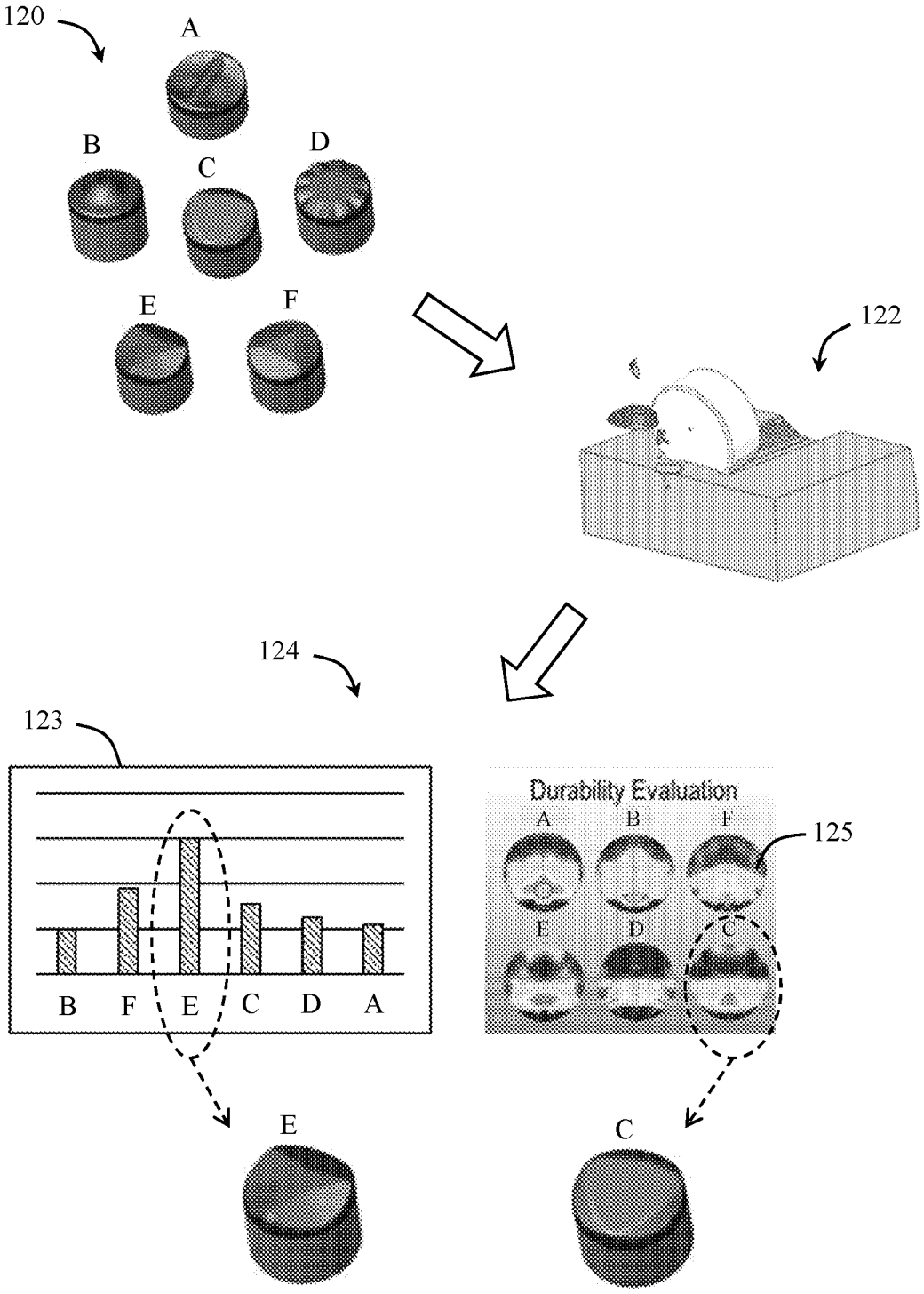
120
A
B
C
D
E
F
122
124
123
B
F
E
C
D
A
Durability Evaluation
A
B
F
E
D
C
125
E
C

FIG. 12

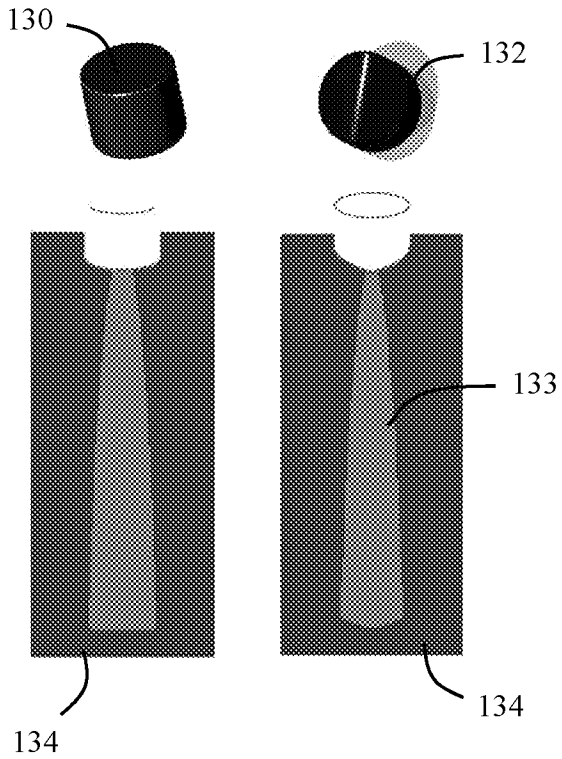

FIG. 13

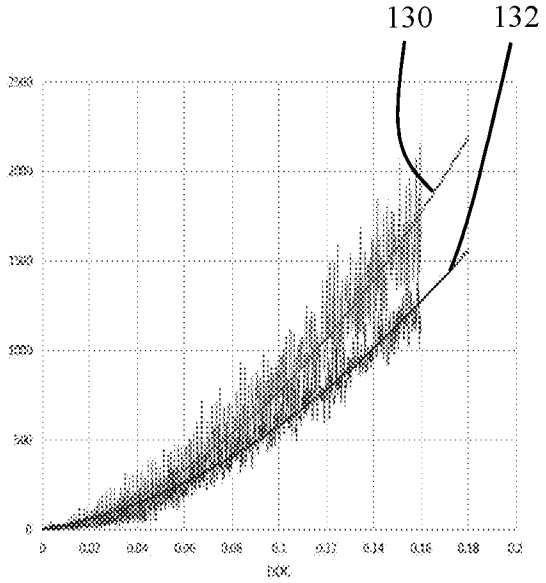

FIG. 14

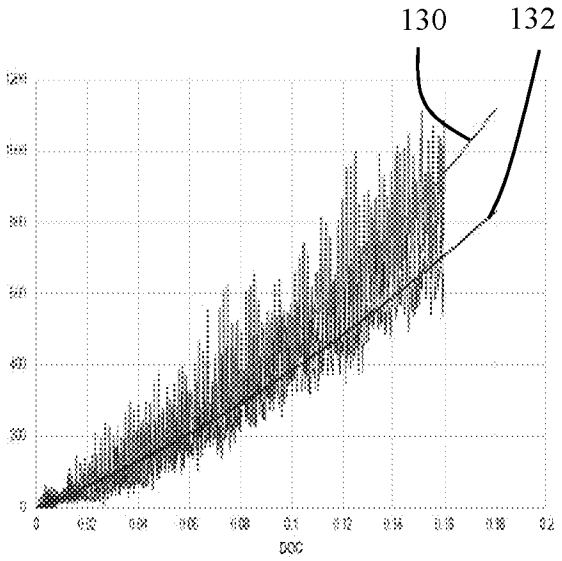

FIG. 15

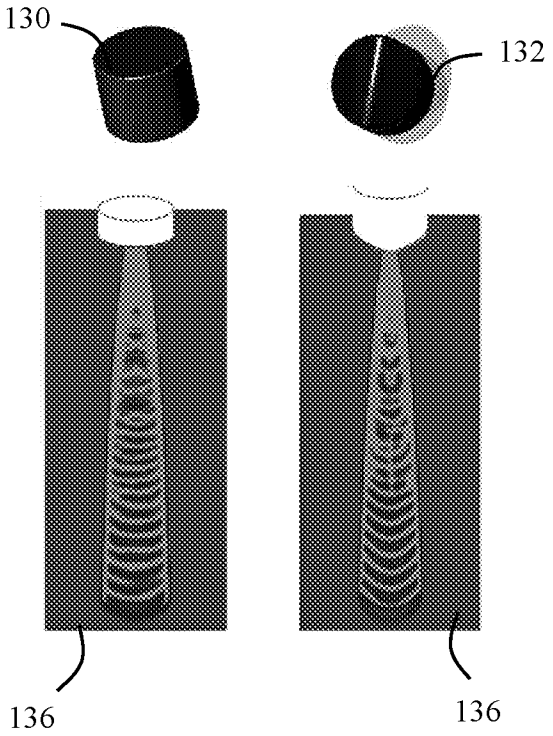

FIG. 16

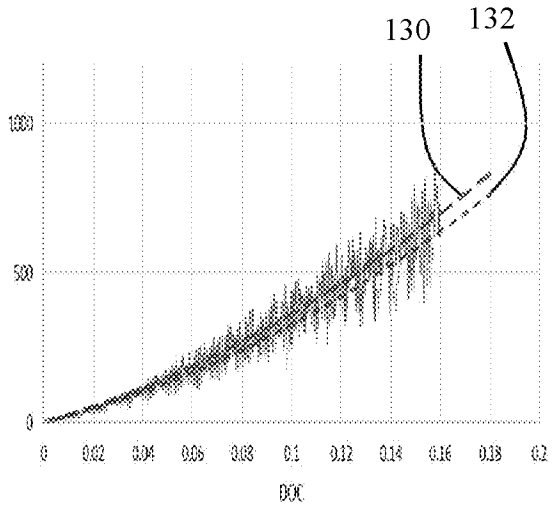

FIG. 17

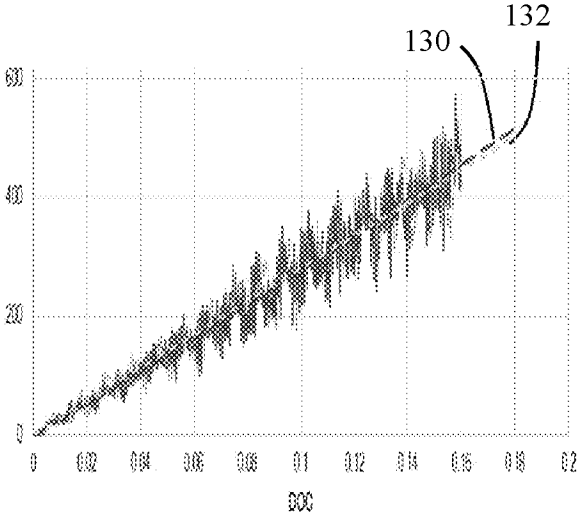

FIG. 18

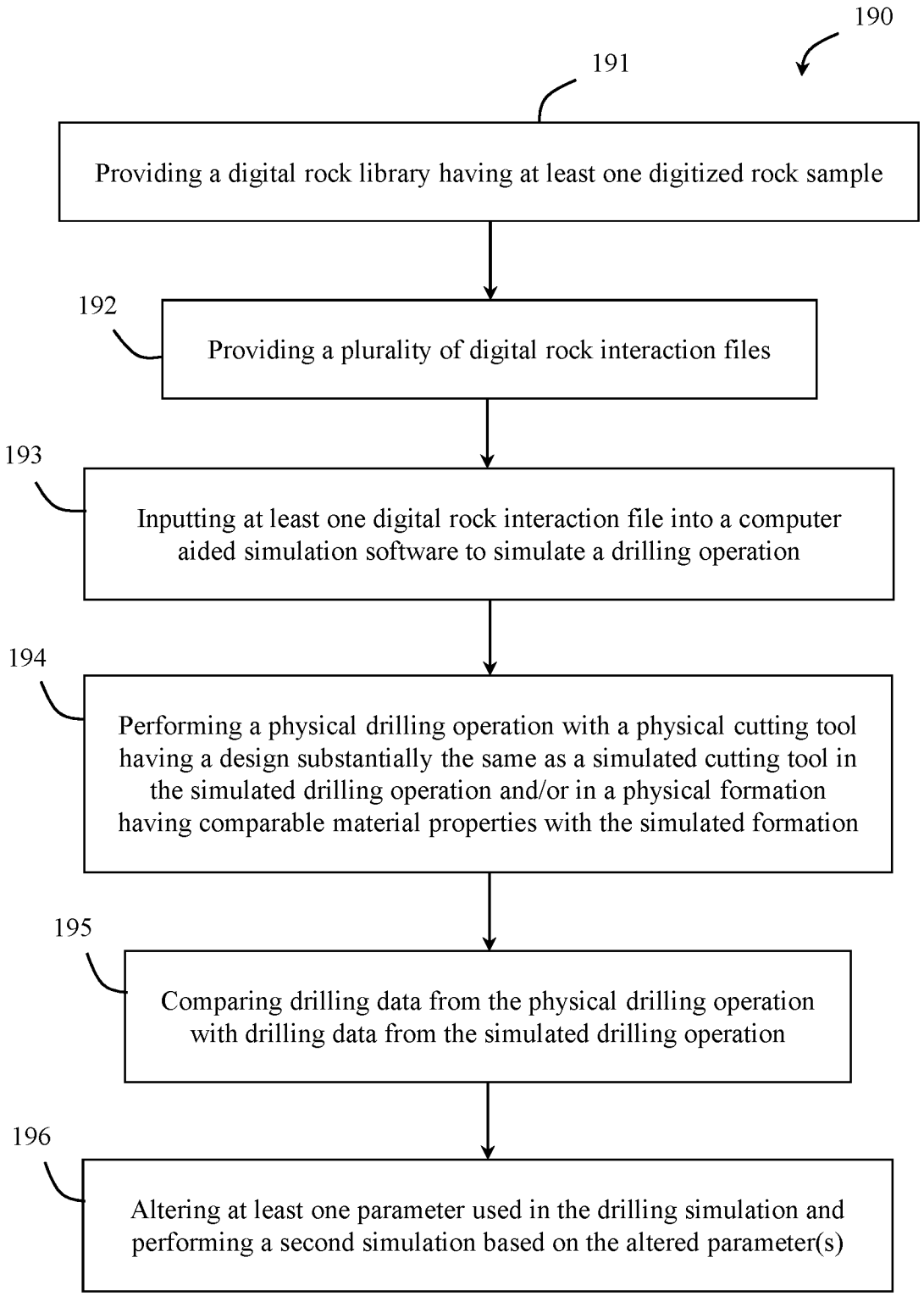
190
191
Providing a digital rock library having at least one digitized rock sample
192
Providing a plurality of digital rock interaction files
193
Inputting at least one digital rock interaction file into a computer aided simulation software to simulate a drilling operation
194
Performing a physical drilling operation with a physical cutting tool having a design substantially the same as a simulated cutting tool in the simulated drilling operation and/or in a physical formation having comparable material properties with the simulated formation
195
Comparing drilling data from the physical drilling operation with drilling data from the simulated drilling operation
196
Altering at least one parameter used in the drilling simulation and performing a second simulation based on the altered parameter(s)

FIG. 19

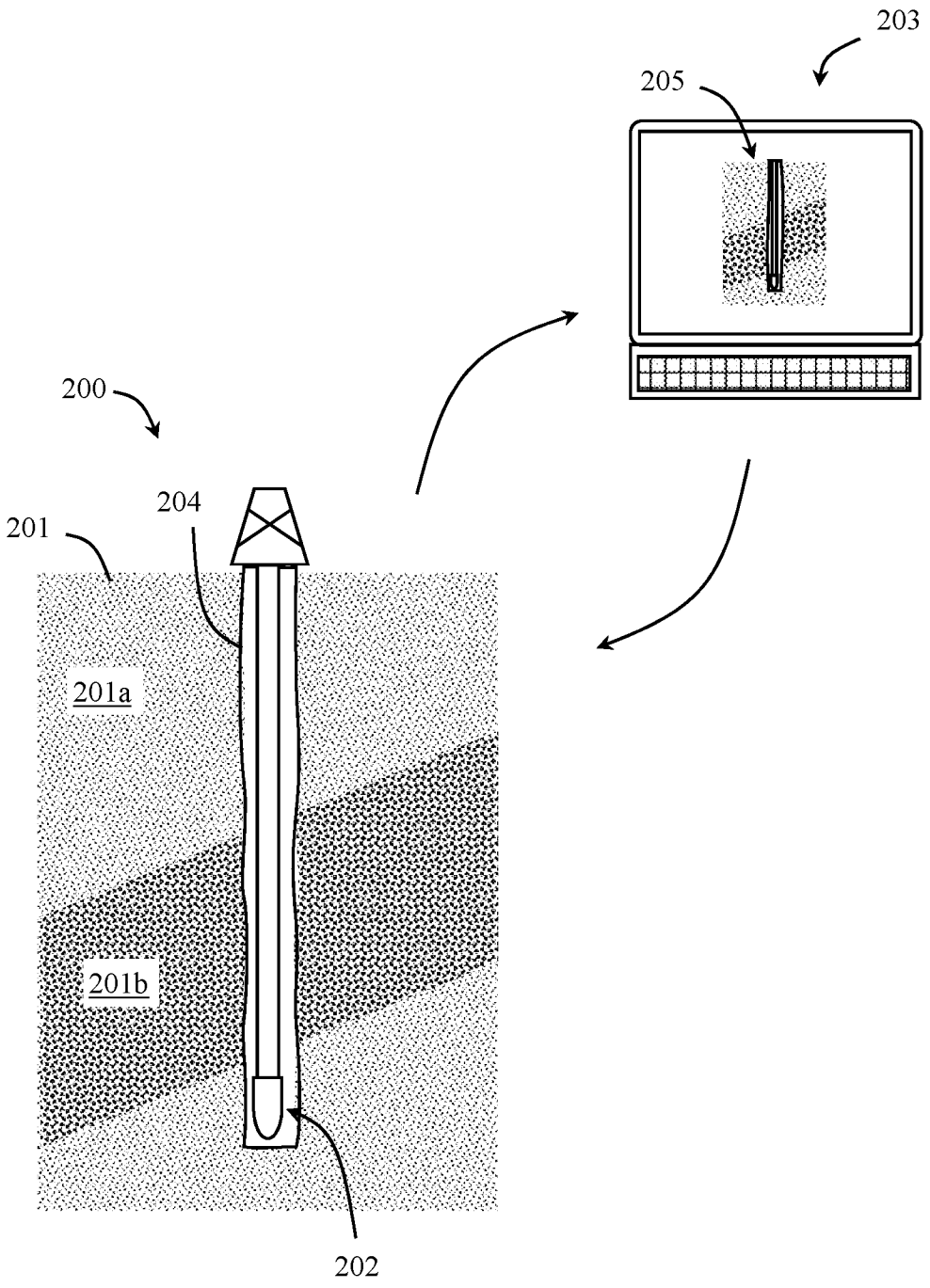

FIG. 20

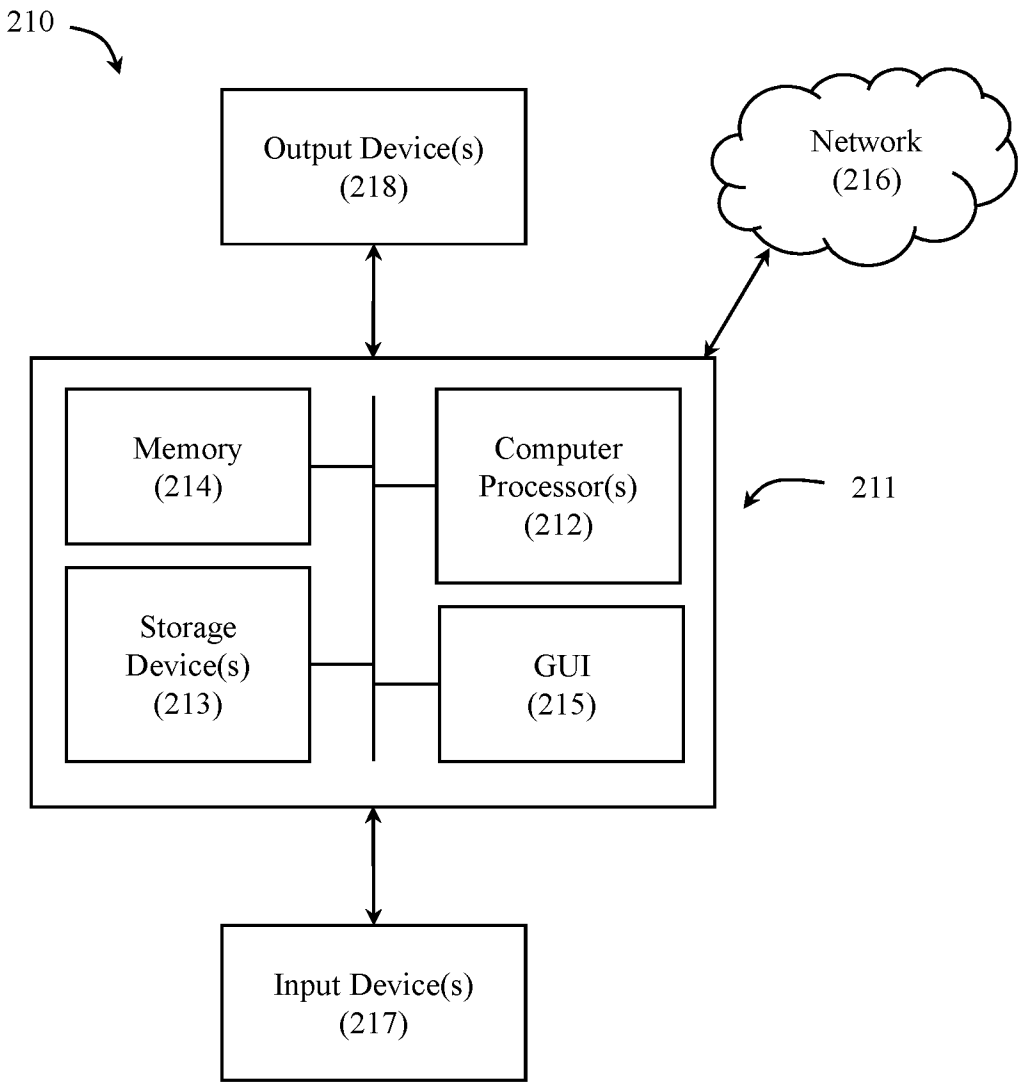
210
Output Device(s)
(218)
Network
(216)
Memory
(214)
Computer
Processor(s)
(212)
211
Storage
Device(s)
(213)
GUI
(215)
Input Device(s)
(217)

FIG. 21

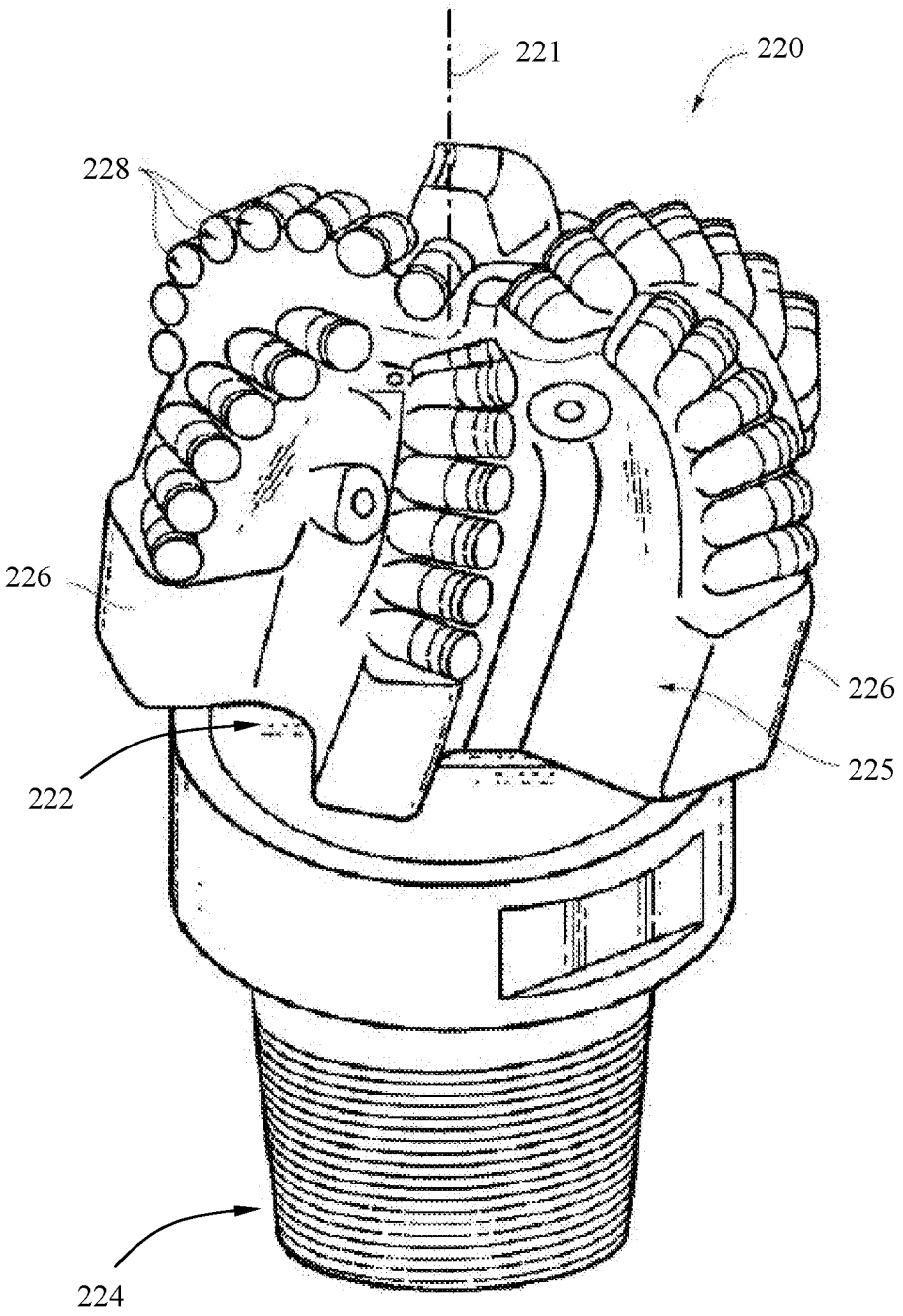

FIG. 22
(Prior Art)