Week 1

1. By what factor does the volume of an idea gas change if the pressure changes by a factor of 3 and the temperature by a factor of 5?

$$pV = Nk_BT$$

$$V = Nk_BT\,p^{-1}$$

$$V \propto T\,p^{-1}$$

$$\frac{V_2}{V_1} = \left(\frac{T_2}{T_1}\right)^1 \cdot \left(\frac{p_2}{p_1}\right)^{-1}$$

$$\frac{V_2}{V_1} = (5)^1(3)^{-1}$$

$$\frac{V_2}{V_1} = \frac{5}{3} = 1.\overline{6}$$

2. By what factor does the temperature change if the number of particles doubles and the volume changes by 1/4?

$$\frac{T_2}{T_1} = \frac{1}{8}$$

3. By what factor does the number of particles change if the temperature doubles and the pressure changes by 1/4?

$$\frac{N_2}{N_1} = \frac{1}{8}$$

If the ice is even colder... (−150°)

$Q = mc\Delta T$

$= 1\,kg \cdot 2.1 \cdot (150°)$

$= 315\,kJ$

Week 2

4. 1 kg of ice. initially -40C and added to 0.5 kg of water that is 5C. What is the equilibrium temp? If equilibrium is 0 C, then how much ice melts? → none ice melts, So how much ice is there?

$$\underbrace{1 \cdot 2.1 \cdot (T_f - -150°C)}_{\text{warming up the very cold ice}} \underbrace{-10.46\,kJ}_{\text{cooling the water}} \underbrace{-167\,kJ}_{\text{freezing the water}} + \underbrace{0.5 \cdot 2.1 \cdot (T_f - 0)}_{\text{cooling the ice that was water}} = 0$$

$T_f = -43.7°C$

Energy to melt all the ice:

- $Q = mc\Delta T$
  $= 1\,kg \cdot 2.1\,\frac{kJ}{kgK}(0 - (-40))$
  $= 84\,kJ$
- $Q = mL$
  $= 1\,kg \cdot 333.7\,kJ/kg$
  $= 333.7\,kJ/kg$

Energy to cool/freeze the water:

- $Q = mc\Delta T = 0.5\,kg(4.184)(0 - 5)$
  $= -10.46\,kJ$
- Q to freeze all the water
  $Q = -mL$ ← freezing
  $Q = -0.5\,kg(333.7\,kJ/kg)$
  $Q = -167\,kJ$

$84\,kJ$
$-10.46\,kJ$
$73.54\,kJ$

↳ energy that is given by the water as it freezes

$Q = mL$

$73.54\,kJ = m \cdot 333.7\,kJ/kg$

$m = 0.2\,kg$

$+ 1.0\,kg$ ← already had

$m = 1.2\,kg$ ← total

Week 3

5. What is the difference between a heat pump and an air conditioner?

6. The definition of efficiency from the notes is:

$$e = \frac{W_{out}}{Q_{in}}$$

Also from the first law of thermo, we had:

$$Q_{in} = W_{out} + Q_{out}$$

Combine these two equations to get an expression for efficiency only in terms of heat in and out (*Hint: substitute for Work.*)

7. Follow up on the previous problem. Heat engines can operate at many different efficiencies depending on the cycles and how much heat goes in and out, but there is a cycle that represents an ideal heat engine that is the best efficiency possible. It is called the *Carnot Cycle*. The details of this cycle are not important but the fundamental take away is that the heat that comes in (Q_{in}) comes from a source that is at temperature T_H, and the heat that goes out (Q_{out}) goes to a temperature of the surroundings at T_C. For a heat engine that operates between these temperatures (like the Carnot cycle) the ratio of the Heat out and in is equal to the ratio of the temperatures:

$$\frac{Q_{out}}{Q_{in}} = \frac{T_C}{T_H}$$

This is a long lead up to the task of use this proportion to find an expression for the efficiency of an ideal heat engine in terms of the temperatures between which the engine operates. (*Hint: Make a substitution in the equation from the answer to the previous problem.*)

8. In the engine of a car, suppose the combustion of gasoline and air that takes place produces temperatures that are around 3000 °C while the exhaust gas exits the engine at a temperature of around 1000 °C. Forget about the actual cycle that a gasoline engine undergoes, if this were an ideal process what is the efficiency that this engine can achieve. If you would improve the design to the extent that the exhaust gasses left the engine at room temperature and it still operated as an ideal heat engine, then what would the efficiency be?

Week 4

9. What is the electric field 1 m away from a 1 C charge? What force is on 0.2 C that is sitting at this point?

10. What is the electric field 1 m away from a uniformly charged sheet that is 9 m^2 in area and has 1 C of charge? What is σ in this case? What force would be on a 0.2 C charge that was sitting there?

11. A $+20\,\mu C$ charge is 2 m away from a $-5\,\mu C$ charge. What is the electric field halfway between the two charges? What is it 1 m away from the $+20\,\mu C$ charge on the side opposite the $-5\,\mu C$ charge. What is the electric field 1 m away from the $-5\,\mu C$ charge on the opposite side as the $+20\,\mu C$ charge? Draw a picture of all of this to keep the locations straight.

12. What is the electric field between two sheets of a capacitor with area $0.01\,\mathrm{m}^2$ that each have a charge of $1\,\mathrm{C}$ (one positive and the other negative)? What is the voltage change per centimeter between them? What is the voltage change across $10\,\mathrm{cm}$?

13. Suppose that the capacitor in the above problem was $2\,\mathrm{cm}$ across between the plates. What is the electric field between these two plates?

Week 5

14. What is the voltage 1 meter away from a $1\,\mathrm{C}$ charge? What is it $10\,\mathrm{m}$ away?

15. What is the voltage 1 meter away from a $1\,\mathrm{C}$ charge that is distributed across a plate of charge that is $9\,\mathrm{m}^2$?

16. What is the voltage 0.5 m between a 1 C charge across a 9 m^2 plate and 0.5 m away from a -1 C charge distributed across a similar plate? What is the electric field at this point? Does it change? Does voltage change?

Week 6

17. ~~If you stretch a wire to three times its original length, then the wire will get thinner, since it is the volume that remains the same. So by what factor does the cross sectional area change (assume as with all wires that it is a cylinder)? By what factor does the resistance change?~~

18. Household wiring is done so that each outlet is in parallel to the others. A group of several outlets are all connected to a circuit breaker, which will typically break the circuit when more than 20 A flow down the wire to that group of outlets. The voltage provided to the circuit is 120 volts (although unlike the constant voltage provided by a battery, the voltage out of the wall is alternating and looks like a sine wave, but this is not important for us in this problem). Most appliances are rated by the power that they do work, so for example a vacuum cleaner may operate at 700 W and a coffee maker at 900 W and a toaster might be 1000 W. If these are all plugged in to outlets on the same circuit, how much current would be supplied through the breaker? Will it trip and stop the current?

$P = IV$

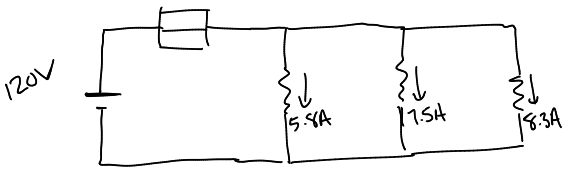

$\frac{P_{VC}}{V} = I_{VC} = \frac{700W}{120V} = 5.8A$ $I_{CM} = \frac{900W}{120V} = 7.5A$ $I_{TO} = \frac{1000W}{120\Omega} = 8.3A$

$I_{total} = 5.8 + 7.5 + 8.3 = 21.7A$ breaker breaks!

19. When you pay your power bill, you pay for each kiloWatt · hour of energy that you use. How much energy in Joules is one kW · h?

20. Assume each atom of copper in a wire contributes one electron to be able to move freely in a current. The mass density of copper is $\rho_m = 8.92\,\mathrm{g/cm^3}$ and the atomic mass of copper is $63.5\,\mathrm{g/mole}$. What is the number density of conduction electrons in copper (electrons per $\mathrm{m^3}$)? If 5 A of current are flowing through a copper wire that has a diameter of 0.1 mm, then what is the drift velocity of electrons in the wire?

Week 7

21. Derive an expression for the energy density of a capacitor. Start with one of the expressions above for the energy of the capacitor and divide it by the volume of the capacitor. Use some clever substitution to get an expression for the energy density of the capacitor in terms of the electric field inside the capacitor. Design you're own capacitor and then determine its energy density. Compare the energy density of your capacitor to that of an Li-ion battery as well as gasoline (use google).

22. In the above problem, suppose the equivalent capacitance was known (make up a number here) but the capacitance on the far right side was unknown. Using the made up number, what is the unknown capacitor?

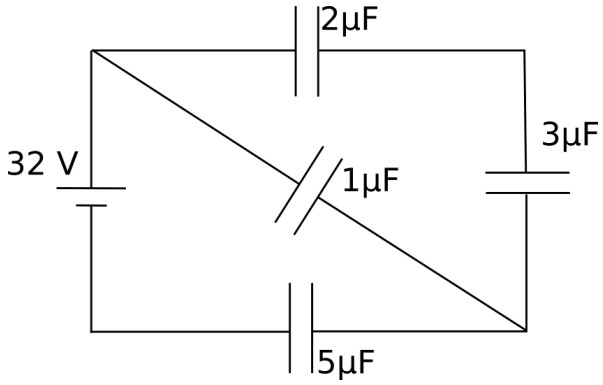

23. A 6.0 μF capacitor is needed to construct a circuit, but all that is available from the capacitor store is 9.0 μF capacitors. How could you use these to construct a 6.0 μF circuit?

24. In the circuit below, the current in the 10 kΩ resistor has a value of 10 mA after 10 s have passed since the switch was closed. What is the time constant of this circuit? What is the equivalent capacitance? What is the value of the unknown capacitor?

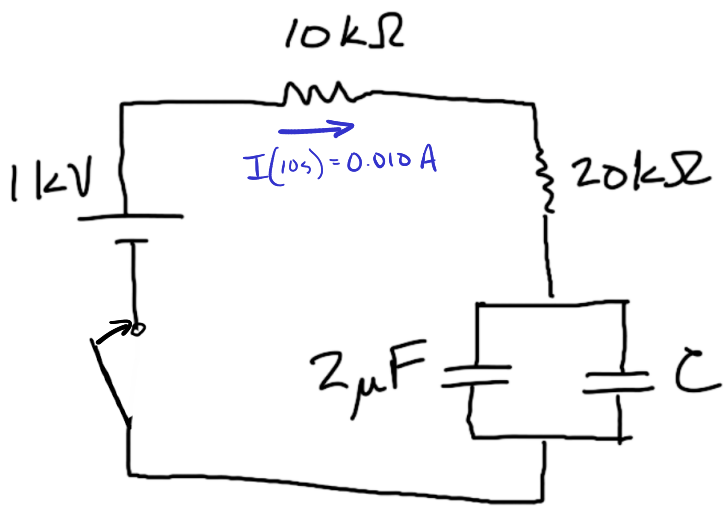

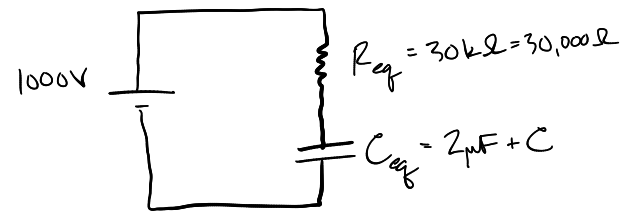

$$I(10s) = 0.010A = I_{max} \cdot e^{-t/\tau}$$

$$\frac{V_B}{R} = \frac{1000V}{30{,}000\Omega} = 0.0333\,A$$

$$0.010A = 0.033A \cdot e^{-10/\tau}$$

$$0.303 = e^{-10/\tau}$$

$$\ln(0.303) = \frac{-10}{\tau}$$

$$\tau = \frac{-10}{\ln(0.303)} = 8.3s$$

$$\tau = RC$$

$$8.3s = 30{,}000\Omega \cdot C_E$$

$$C_E = 2.8 \cdot 10^{-4} F$$

$$C_E = C_1 + C_2$$

$$2.8 \cdot 10^{-4} F = 2 \cdot 10^{-6} F + C_2$$

$$C_2 = 2.78 \cdot 10^{-4} F$$

M_{ice} at $0°$

1kg of water $20°C$

so that $T_{eq} = 5°C$

$$\underbrace{M_{ice} \cdot L_f}_{\text{ice melts}} + \underbrace{M_{ice} C_w \cdot 5K}_{\text{same mass of ice now water warms up}} + \underbrace{1kg \cdot C_w \cdot (-15K)}_{\text{original water cools}} = 0$$

98kJ = U 114 = Q

$\Delta U = Q + W$

$W = -16J = -p\Delta V$

$W = -p\Delta V$ ← specifically work done on the gas
only constant pressure
(isobaric)

$U = \frac{(0.0186C)^2}{2 \cdot 2 \cdot 10^{-3} F}$

$U = 0.086$

12V 2mF 1000Ω

3s → U

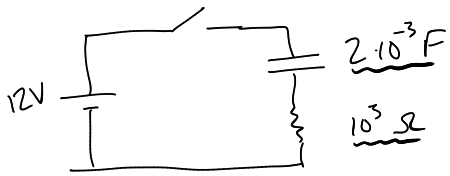

$U = \frac{1}{2} Q \Delta V = \frac{1}{2} C \Delta V^2 = \boxed{\frac{Q^2}{2C}}$

$I_R(t)$

$Q_c(t) = Q_{max}(1 - e^{-t/\tau})$

$\tau = RC$

$\tau = 2s$

$Q = CV$

$= 2 \cdot 10^{-3} \cdot 12$

$= 24 \cdot 10^{-3} = 0.024 C$

$Q(3s) = 0.024(1 - e^{-3/2})$

$= 0.0186 C$