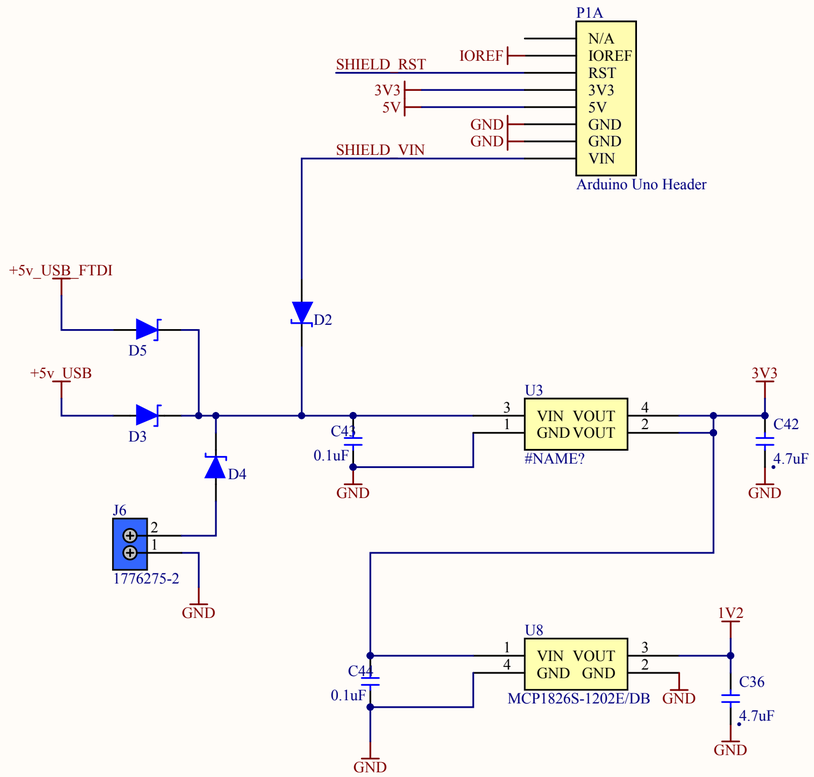

Wavenumber Technologies

Rev:

Sheet 2 of 6

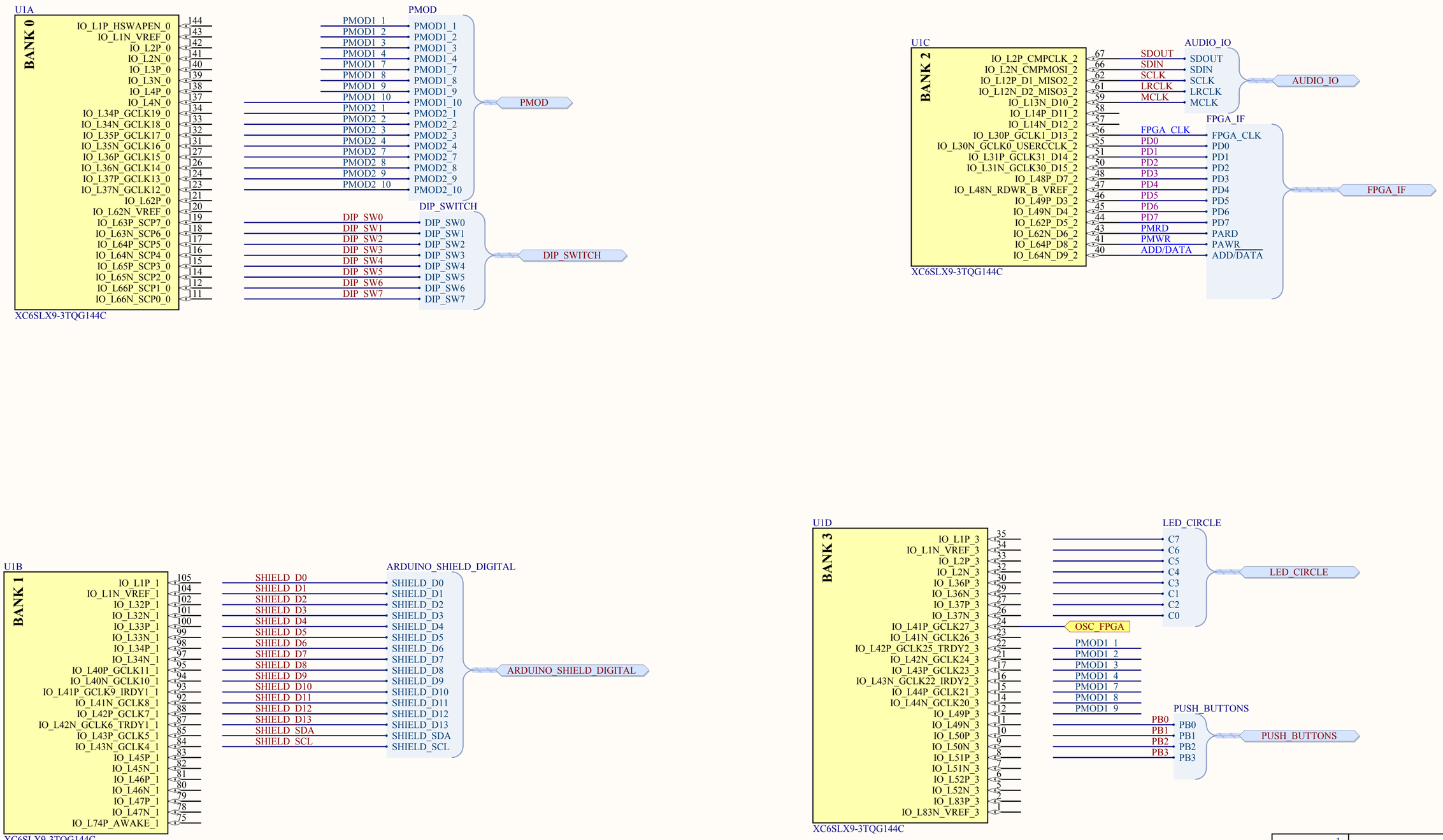

Wavenumber Technologies

Rev:

Sheet 3 of 6

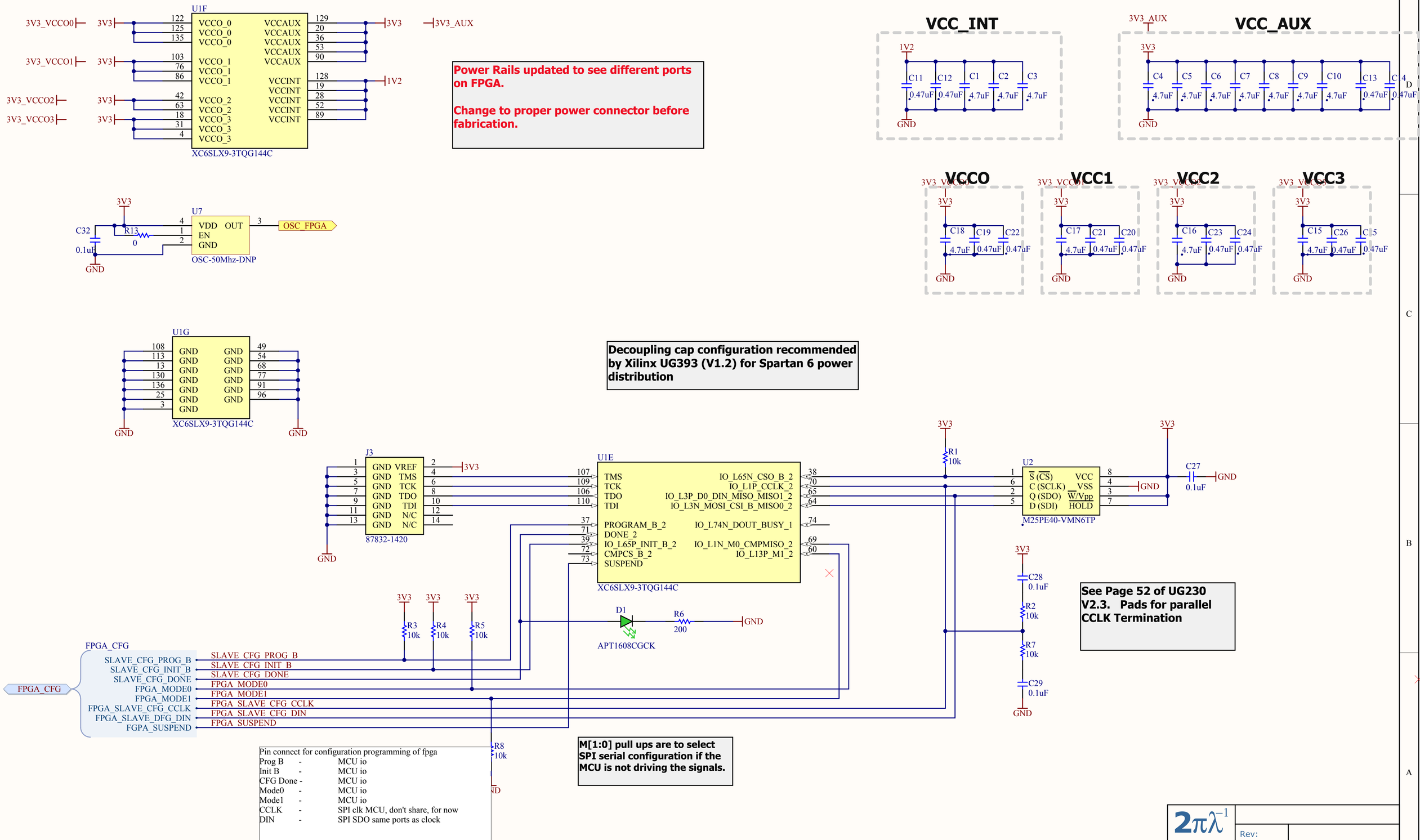
U1F
XC6SLX9-3TQG144C
3V3_VCCO0
3V3_VCCO1
3V3_VCCO2
3V3_VCCO3
3V3
3V3_AUX
1V2
Power Rails updated to see different ports on FPGA.
Change to proper power connector before fabrication.
VCC_INT
VCC_AUX
VCCO
VCC1
VCC2
VCC3
U7
OSC-50Mhz-DNP
OSC_FPGA
C32
0.1uF
R13
0
GND
U1G
XC6SLX9-3TQG144C
Decoupling cap configuration recommended by Xilinx UG393 (V1.2) for Spartan 6 power distribution
J3
87832-1420
U1E
XC6SLX9-3TQG144C
U2
M25PE40-VMN6TP
C27
0.1uF
R1
10k
C28
0.1uF
R2
10k
R7
10k
C29
0.1uF
See Page 52 of UG230 V2.3. Pads for parallel CCLK Termination
R3
10k
R4
10k
R5
10k
D1
APT1608CGCK
R6
200
FPGA_CFG
SLAVE_CFG_PROG_B
SLAVE_CFG_INIT_B
SLAVE_CFG_DONE
FPGA_MODE0
FPGA_MODE1
FPGA_SLAVE_CFG_CCLK
FPGA_SLAVE_DFG_DIN
FGPA_SUSPEND
R8
10k
M[1:0] pull ups are to select SPI serial configuration if the MCU is not driving the signals.
Pin connect for configuration programming of fpga
Prog B - MCU io
Init B - MCU io
CFG Done - MCU io
Mode0 - MCU io
Mode1 - MCU io
CCLK - SPI clk MCU, don't share, for now
DIN - SPI SDO same ports as clock
Wavenumber Technologies
Rev:
Sheet 4 of 6

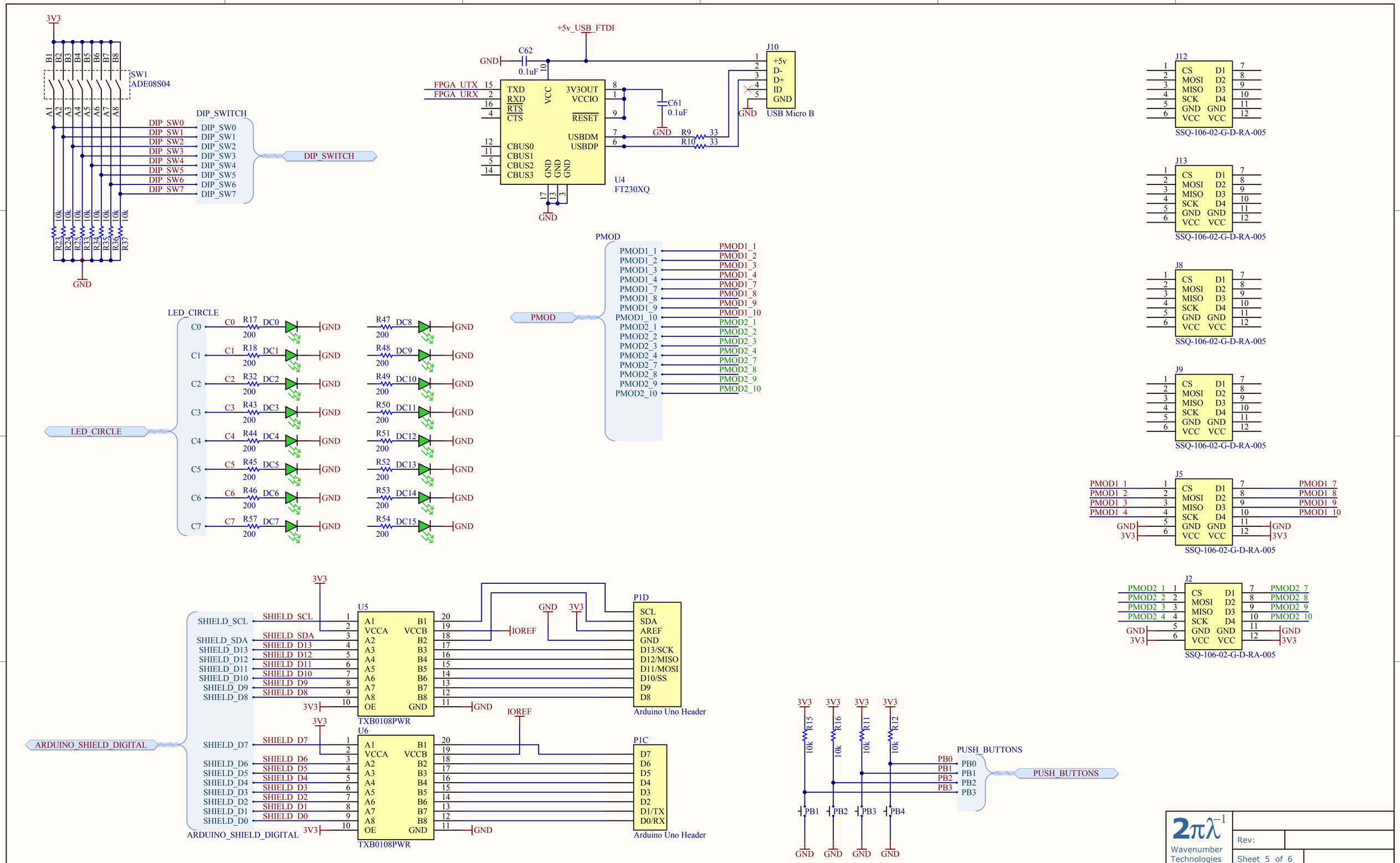
3V3
SW1
ADE08S04
DIP_SWITCH
DIP_SW0
DIP_SW1
DIP_SW2
DIP_SW3
DIP_SW4
DIP_SW5
DIP_SW6
DIP_SW7
R23 R24 R25 R33 R34 R35 R36 R37
10k
GND
+5v_USB_FTDI
C62
0.1uF
FPGA_UTX
FPGA_URX
TXD
RXD
RTS
CTS
VCC
3V3OUT
VCCIO
RESET
USBDM
USBDP
CBUS0
CBUS1
CBUS2
CBUS3
U4
FT230XQ
C61
0.1uF
R9 33
R10 33
J10
+5v
D-
D+
ID
GND
USB Micro B
J12
J13
J8
J9
J5
J2
CS
MOSI
MISO
SCK
GND
VCC
D1
D2
D3
D4
SSQ-106-02-G-D-RA-005
PMOD
PMOD1_1
PMOD1_2
PMOD1_3
PMOD1_4
PMOD1_7
PMOD1_8
PMOD1_9
PMOD1_10
PMOD2_1
PMOD2_2
PMOD2_3
PMOD2_4
PMOD2_7
PMOD2_8
PMOD2_9
PMOD2_10
LED_CIRCLE
C0 C1 C2 C3 C4 C5 C6 C7
R17 R18 R32 R43 R44 R45 R46 R57
R47 R48 R49 R50 R51 R52 R53 R54
200
DC0 DC1 DC2 DC3 DC4 DC5 DC6 DC7
DC8 DC9 DC10 DC11 DC12 DC13 DC14 DC15
ARDUINO_SHIELD_DIGITAL
SHIELD_SCL
SHIELD_SDA
SHIELD_D13
SHIELD_D12
SHIELD_D11
SHIELD_D10
SHIELD_D9
SHIELD_D8
SHIELD_D7
SHIELD_D6
SHIELD_D5
SHIELD_D4
SHIELD_D3
SHIELD_D2
SHIELD_D1
SHIELD_D0
U5
U6
A1 A2 A3 A4 A5 A6 A7 A8
VCCA
OE
B1 B2 B3 B4 B5 B6 B7 B8
VCCB
TXB0108PWR
IOREF
P1D
P1C
SCL
SDA
AREF
D13/SCK
D12/MISO
D11/MOSI
D10/SS
D9
D8
D7
D6
D5
D4
D3
D2
D1/TX
D0/RX
Arduino Uno Header
R15 R16 R11 R12
10k
PB1 PB2 PB3 PB4
PUSH_BUTTONS
PB0
PB1
PB2
PB3
2πλ⁻¹
Wavenumber Technologies
Rev:
Sheet 5 of 6

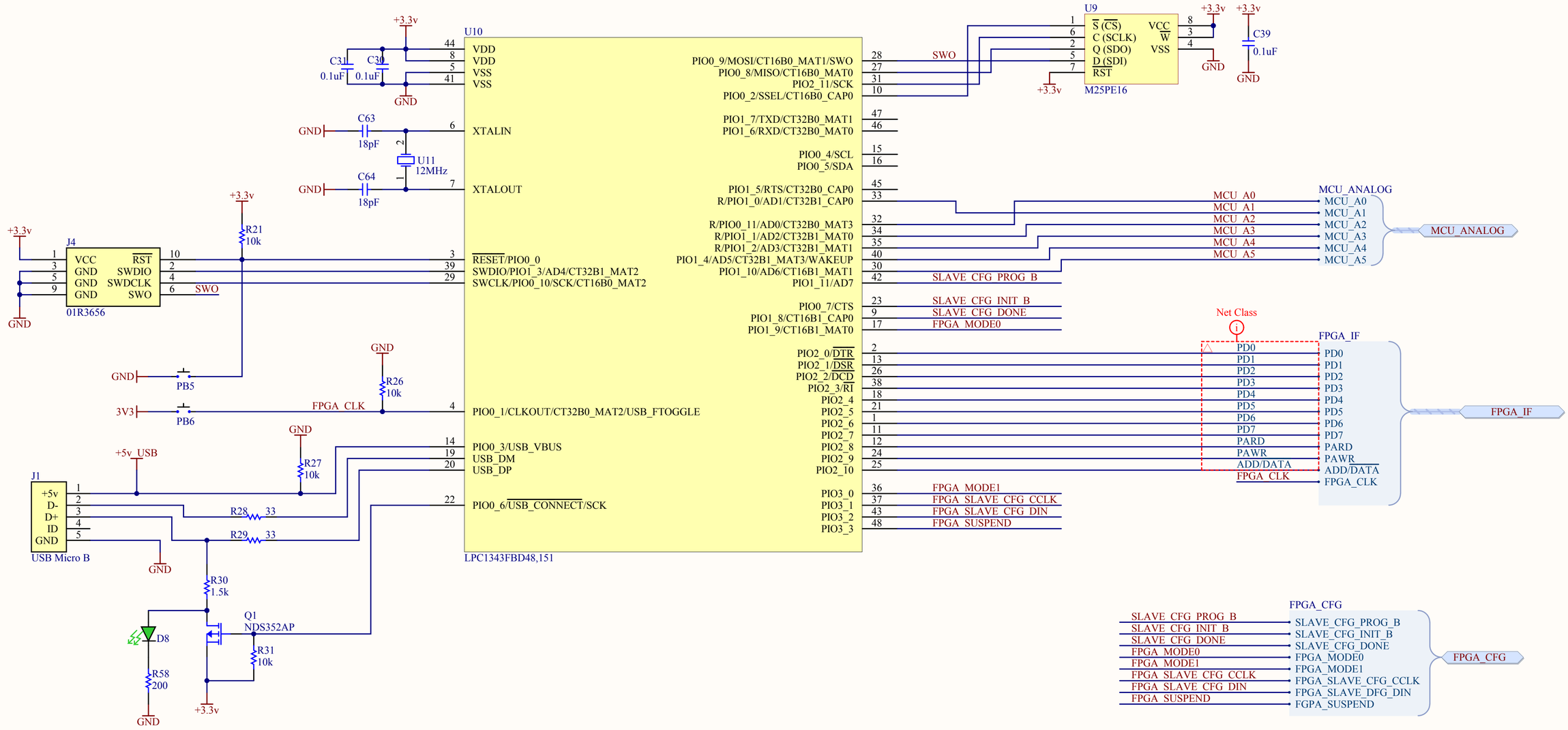

Wavenumber Technologies

Rev:

Sheet 6 of 6