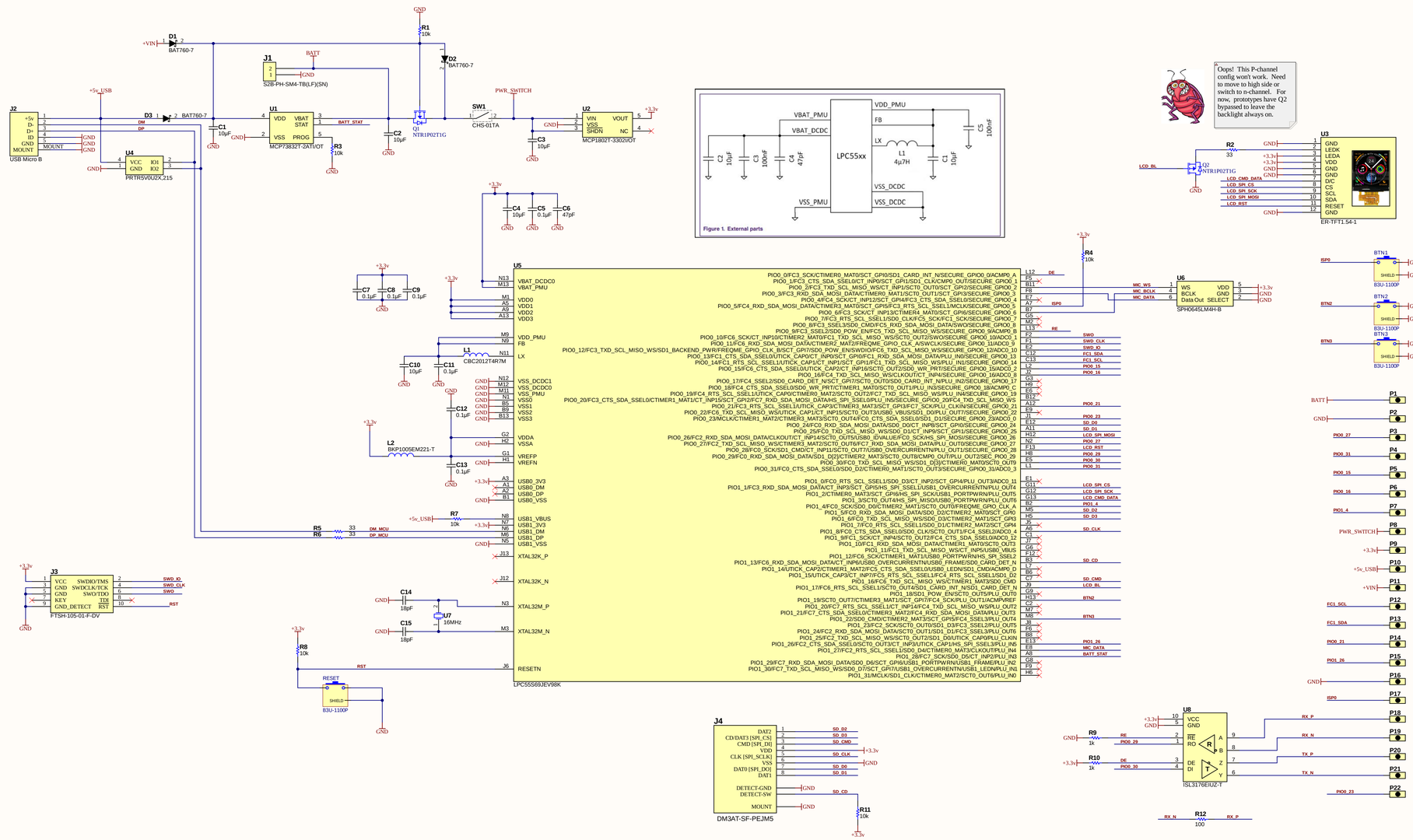

LPC55S69_MINI	
PCB REV C	Sheet 1 of 1
CCA REV C	E. Hughes 2012-11-25
PROTOTYPE	