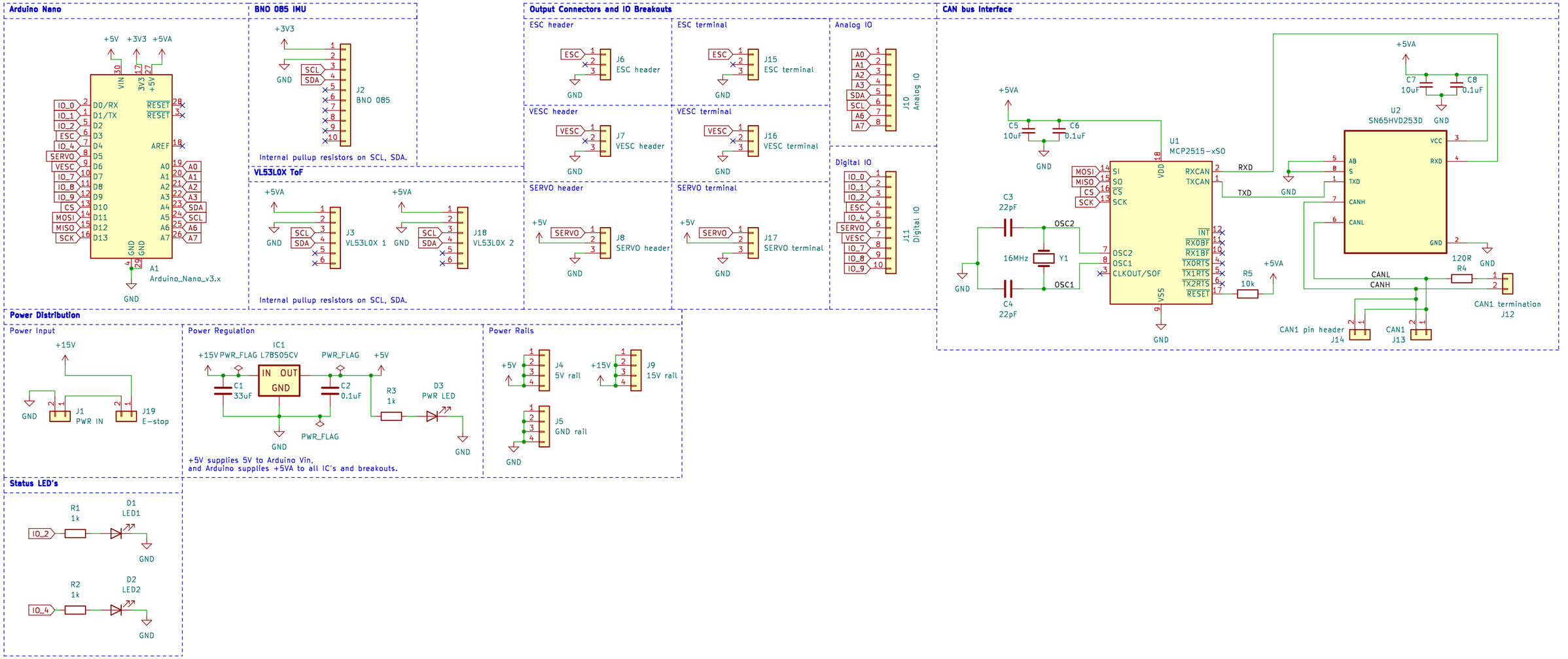

B.Sc group 10

Sheet: /

File: sprayGun_PCB.kicad_sch

Title: B.Sc spray gun PCB

Size: A3	Date: 2022-04-11	Rev: A
KiCad E.D.A. kicad 6.0.4-6f826c9f35-116~ubuntu20.04.1		Id: 1/1