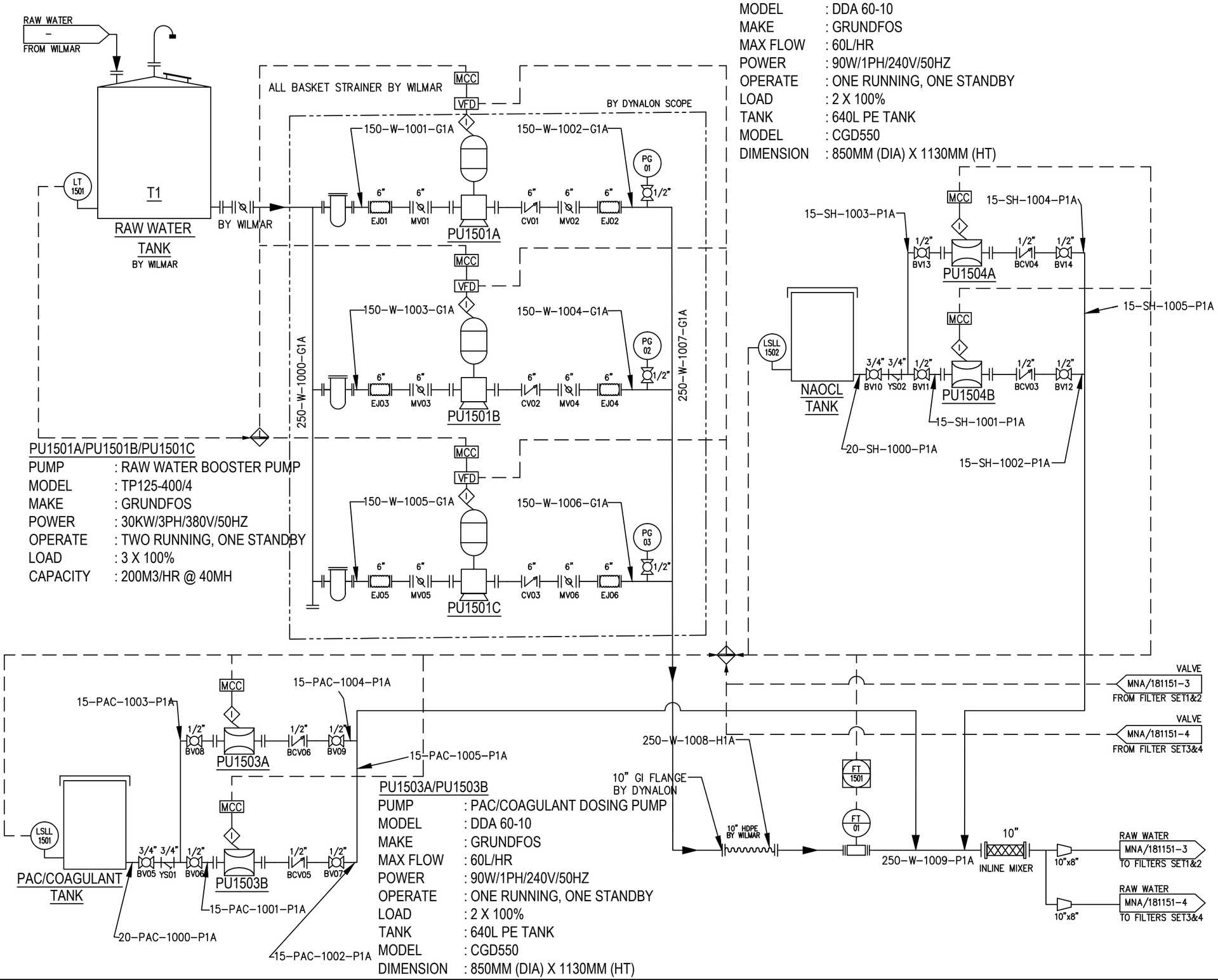

PU1504A/PU1504B

PUMP	: NAOCL DOSING PUMP
MODEL	: DDA 60-10
MAKE	: GRUNDFOS
MAX FLOW	: 60L/HR
POWER	: 90W/1PH/240V/50HZ
OPERATE	: ONE RUNNING, ONE STANDBY
LOAD	: 2 X 100%
TANK	: 640L PE TANK
MODEL	: CGD550
DIMENSION	: 850MM (DIA) X 1130MM (HT)

PU1501A/PU1501B/PU1501C

PUMP	: RAW WATER BOOSTER PUMP
MODEL	: TP125-400/4
MAKE	: GRUNDFOS
POWER	: 30KW/3PH/380V/50HZ
OPERATE	: TWO RUNNING, ONE STANDBY
LOAD	: 3 X 100%
CAPACITY	: 200M3/HR @ 40MH

PU1503A/PU1503B

PUMP	: PAC/COAGULANT DOSING PUMP
MODEL	: DDA 60-10
MAKE	: GRUNDFOS
MAX FLOW	: 60L/HR
POWER	: 90W/1PH/240V/50HZ
OPERATE	: ONE RUNNING, ONE STANDBY
LOAD	: 2 X 100%
TANK	: 640L PE TANK
MODEL	: CGD550
DIMENSION	: 850MM (DIA) X 1130MM (HT)

LEGEND

REV	DATE	REMARKS
REV-17	14/11/2018	CHANGE TAG NO.
REV-16	29/10/2018	ADMEND MMF INLET PIPE & MIXER TO 10", ADD CR

OWNER :

CLIENT :

WILMAR MNA SERANG

LOCATION :

SERANG, INDONESIA

PROJECT NAME :

2X200M3/HR AMF, ACP &
2X135M3/HR UF & 2X100M3/HR
RO SYSTEM

DRAWING TITLE :

PROCESS INSTRUMENTATION DIAGRAM

CONTRACTOR :

DYNALON ENGINEERING SDN BHD
NO 5, JALAN P2/19A,BANDAR TEKNOLOGI KAJANG,
43500 SEMENYIH SELANGOR , MALAYSIA .
TEL : +603-87236991 / 7991 FAX : +603-87248991

THIS DRAWING IS THE PROPERTY OF DYNALON ENGINEERING SDN BHD. THE INFORMATION CONTAINED HEREIN SHALL NOT BE USED OR COPIED IN ANY MANNER WITHOUT THE WRITTEN PERMISSION OF DYNALON ENGINEERING SDN BHD.

DESIGNED BY	CH SHO	APPROVED BY	
DRAWN BY	JUNE	SCALE	NTS
DATE	19.07.2018	DRAWING NO.	MNA/181151-1 REV-17

PU1502A/PU1502B

PUMP	: FILTER BACKWASH PUMP
MODEL	: TP150-340/4
MAKE	: GRUNDFOS
POWER	: 30KW/3PH/380V/50PH
OPERATE	: ONE RUNNING, ONE STANDBY
LOAD	: 2 X 100%
CAPACITY	: 320M3/HR @ 26MH

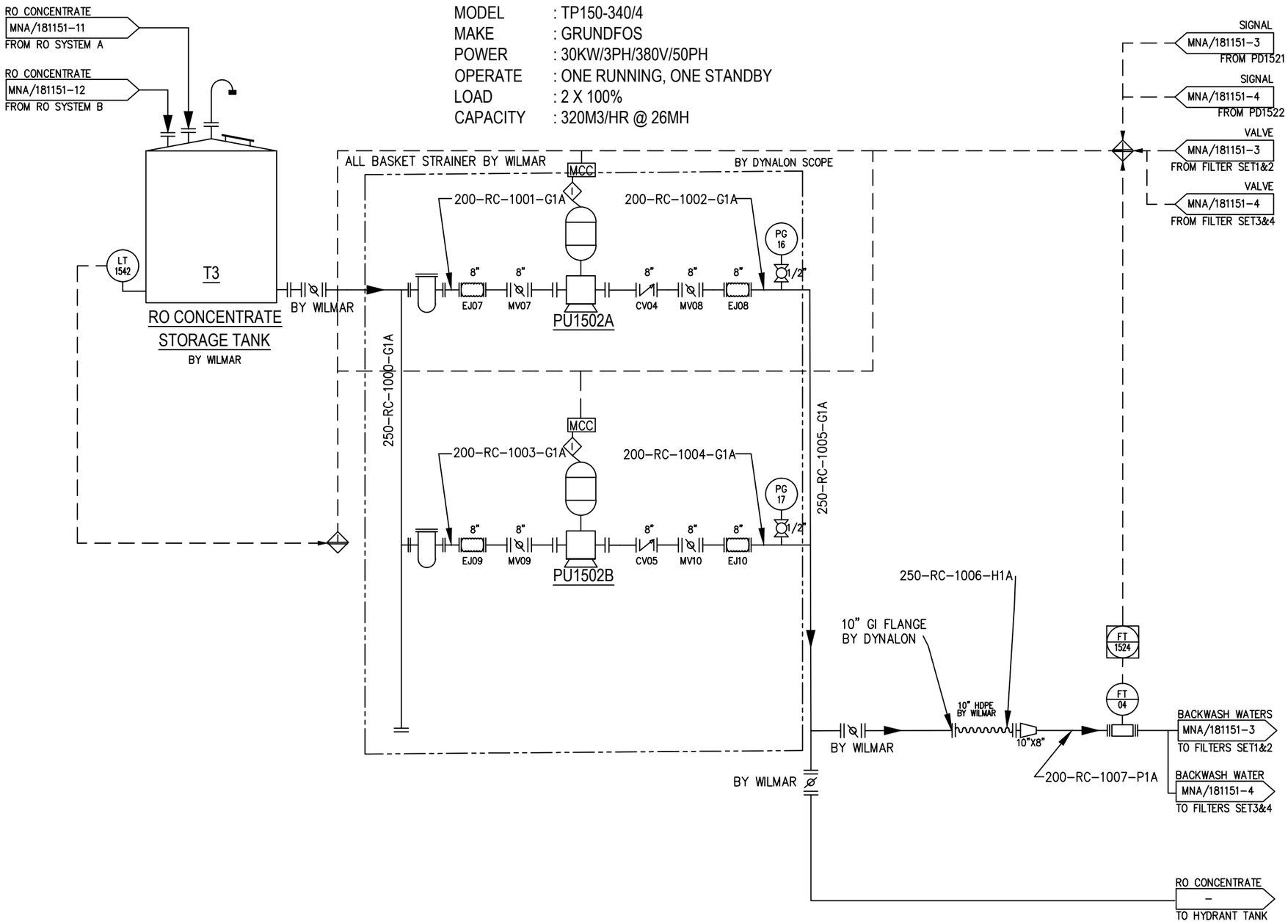

LEGEND

REV	DATE	REMARKS
REV-17	14/11/2018	CHANGE TAG NO.

OWNER :

CLIENT :

WILMAR MNA SERANG

LOCATION :

SERANG, INDONESIA

PROJECT NAME :

2X200M3/HR AMF, ACP & 2X135M3/HR UF & 2X100M3/HR RO SYSTEM

DRAWING TITLE :

PROCESS INSTRUMENTATION DIAGRAM

CONTRACTOR :

DYNALON ENGINEERING SDN BHD
NO 5, JALAN P2/19A,BANDAR TEKNOLOGI KAJANG,
43500 SEMENYIH SELANGOR , MALAYSIA .
TEL : +603-87236991 / 7991 FAX : +603-87248991

THIS DRAWING IS THE PROPERTY OF DYNALON ENGINEERING SDN BHD. THE INFORMATION CONTAINED HEREIN SHALL NOT BE USED OR COPIED IN ANY MANNER WITHOUT THE WRITTEN PERMISSION OF DYNALON ENGINEERING SDN BHD.

DESIGNED BY	CH SHO	APPROVED BY		
DRAWN BY	JUNE	SCALE	NTS	
DATE	19.07.2018	DRAWING NO.	MNA/181151-2	REV-17

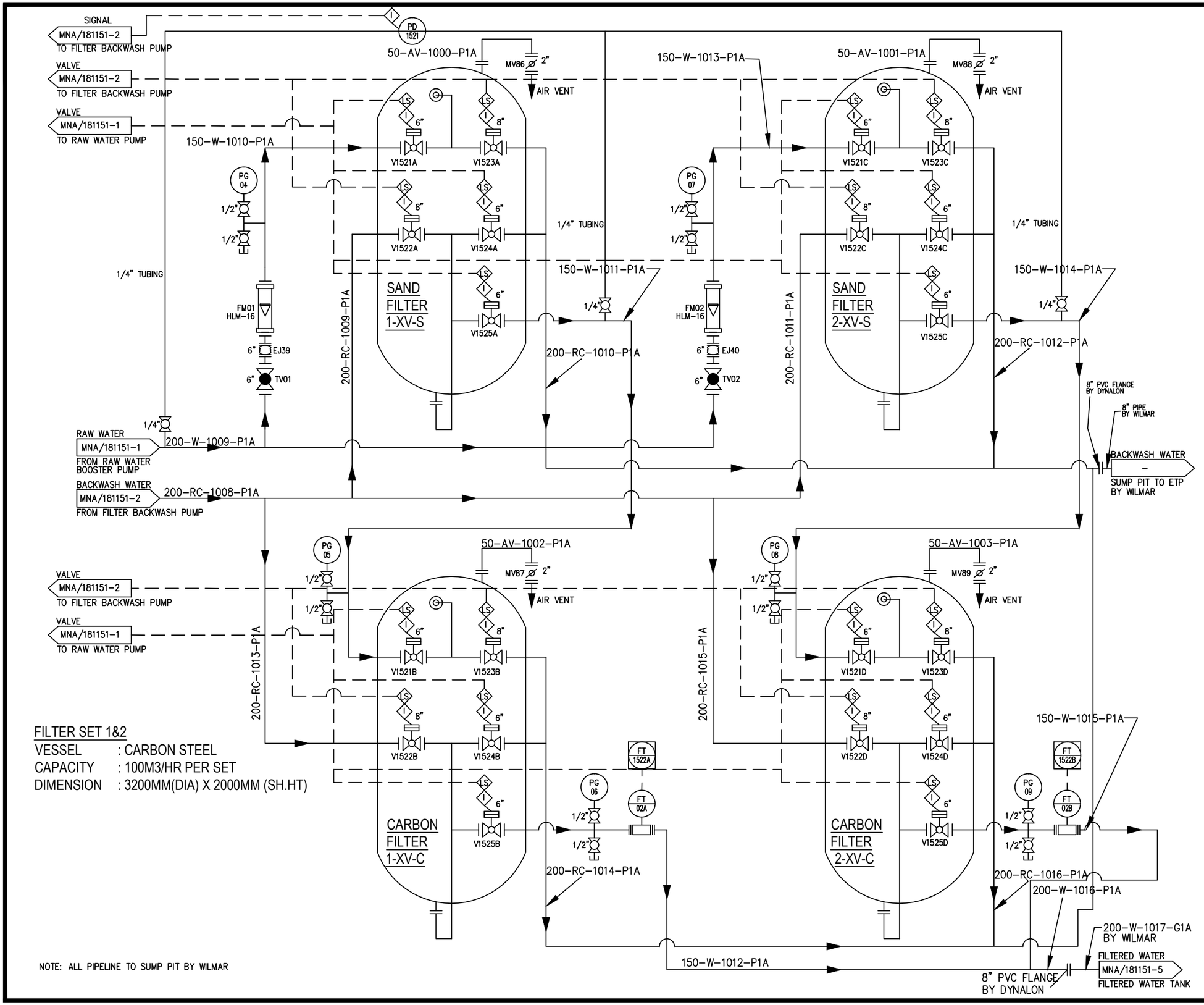

LEGEND

REV	DATE	REMARKS
REV-17	14/11/2018	CHANGE TAG NO.
REV-16	29/10/2018	ADMEND MMF INLET PIPE TO 10". ADDED CR.

OWNER :

CLIENT :

WILMAR MNA SERANG

LOCATION :

SERANG, INDONESIA

PROJECT NAME :

2X200M3/HR AMF, ACP & 2X135M3/HR UF & 2X100M3/HR RO SYSTEM

DRAWING TITLE :

PROCESS INSTRUMENTATION DIAGRAM

CONTRACTOR :

DYNALON ENGINEERING SDN BHD
NO 5, JALAN P2/19A,BANDAR TEKNOLOGI KAJANG,
43500 SEMENYIH SELANGOR , MALAYSIA .
TEL : +603-87236991 / 7991 FAX : +603-87248991

THIS DRAWING IS THE PROPERTY OF DYNALON ENGINEERING SDN BHD. THE INFORMATION CONTAINED HEREIN SHALL NOT BE USED OR COPIED IN ANY MANNER WITHOUT THE WRITTEN PERMISSION OF DYNALON ENGINEERING SDN BHD.

DESIGNED BY	CH SHO	APPROVED BY	
DRAWN BY	JUNE	SCALE	NTS
DATE	19.07.2018	DRAWING NO.	MNA/181151-3 REV-17

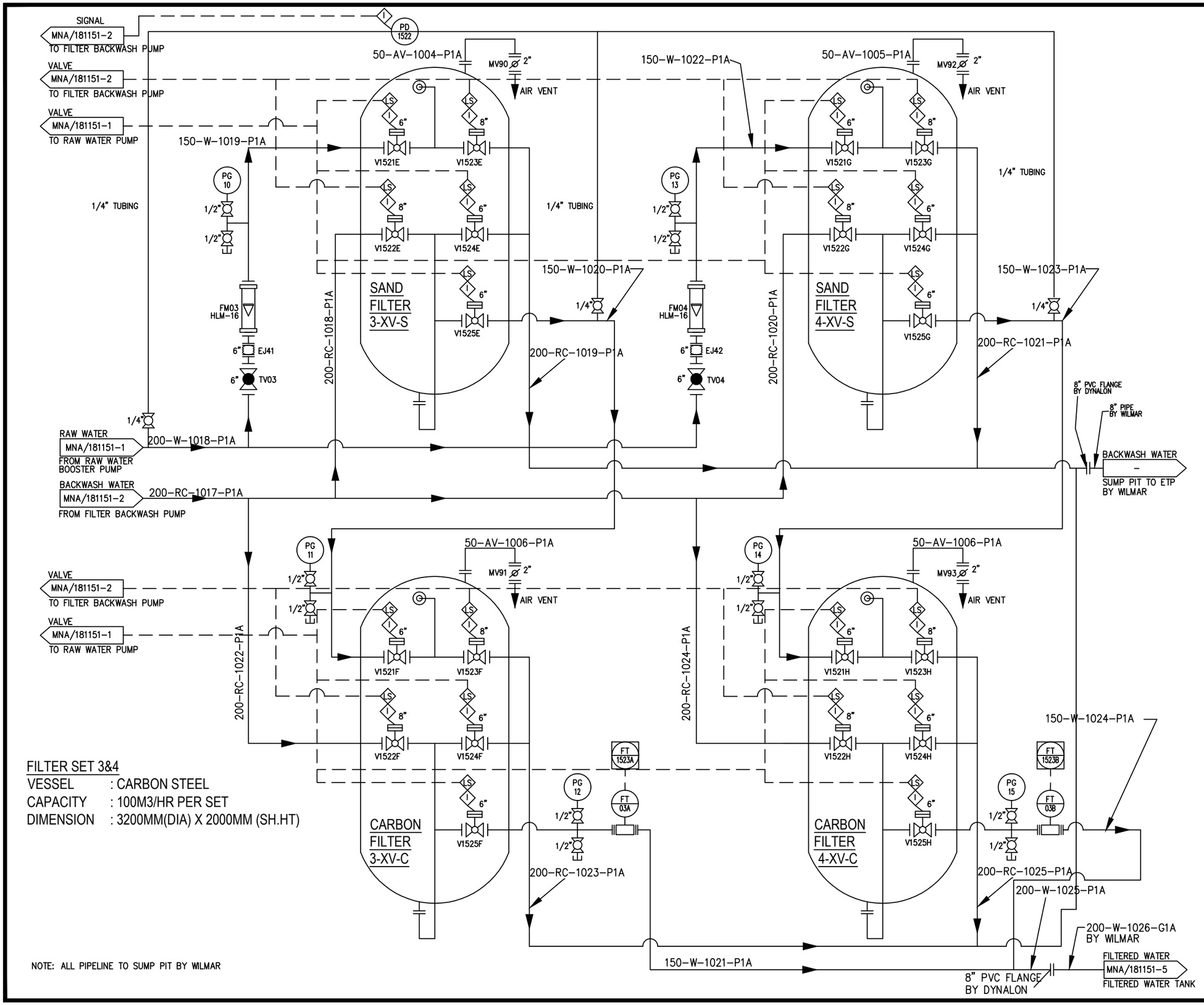

FILTER SET 3&4

VESSEL : CARBON STEEL

CAPACITY : 100M3/HR PER SET

DIMENSION : 3200MM(DIA) X 2000MM (SH.HT)

NOTE: ALL PIPELINE TO SUMP PIT BY WILMAR

LEGEND

REV	DATE	REMARKS
REV-17	14/11/2018	CHANGE TAG NO.

OWNER :

CLIENT :

WILMAR MNA SERANG

LOCATION :

SERANG, INDONESIA

PROJECT NAME :

2X200M3/HR AMF, ACP & 2X135M3/HR UF & 2X100M3/HR RO SYSTEM

DRAWING TITLE :

PROCESS INSTRUMENTATION DIAGRAM

CONTRACTOR :

DYNALON ENGINEERING SDN BHD
NO 5, JALAN P2/19A,BANDAR TEKNOLOGI KAJANG,
43500 SEMENYIH SELANGOR , MALAYSIA .
TEL : +603-87236991 / 7991 FAX : +603-87248991

THIS DRAWING IS THE PROPERTY OF DYNALON ENGINEERING SDN BHD. THE INFORMATION CONTAINED HEREIN SHALL NOT BE USED OR COPIED IN ANY MANNER WITHOUT THE WRITTEN PERMISSION OF DYNALON ENGINEERING SDN BHD.

DESIGNED BY	CH SHO	APPROVED BY	
DRAWN BY	JUNE	SCALE	NTS
DATE	19.07.2018	DRAWING NO.	MNA/181151-4 REV-17

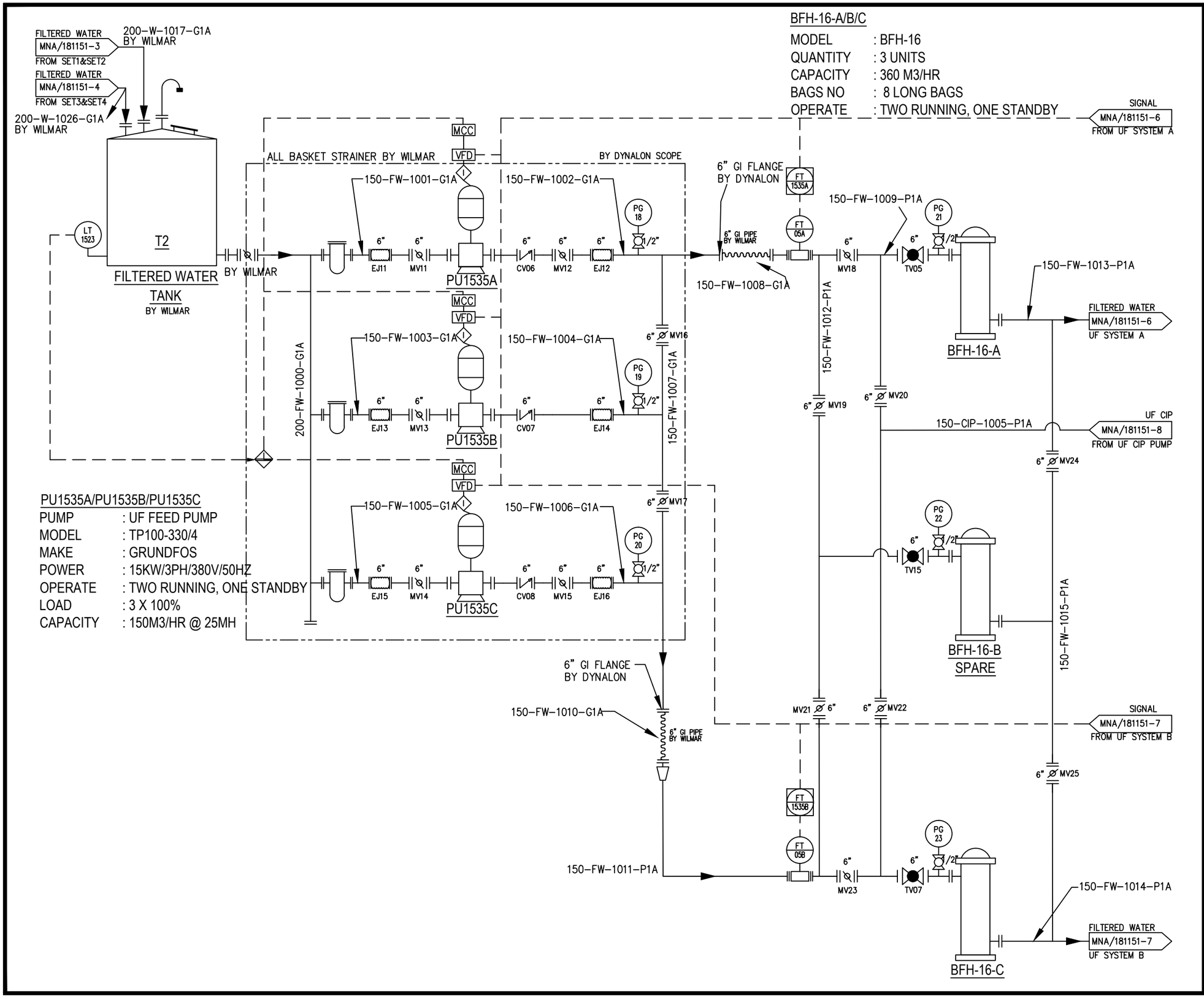

BFH-16-A/B/C

MODEL	: BFH-16
QUANTITY	: 3 UNITS
CAPACITY	: 360 M3/HR
BAGS NO	: 8 LONG BAGS
OPERATE	: TWO RUNNING, ONE STANDBY

PU1535A/PU1535B/PU1535C

PUMP	: UF FEED PUMP
MODEL	: TP100-330/4
MAKE	: GRUNDFOS
POWER	: 15KW/3PH/380V/50HZ
OPERATE	: TWO RUNNING, ONE STANDBY
LOAD	: 3 X 100%
CAPACITY	: 150M3/HR @ 25MH

LEGEND

REV	DATE	REMARKS
REV-17	14/11/2018	CHANGE TAG NO. / ADD FT1535A & FT1535B

OWNER :

CLIENT :

WILMAR MNA SERANG

LOCATION :

SERANG, INDONESIA

PROJECT NAME :

2X200M3/HR AMF, ACP &
2X135M3/HR UF & 2X100M3/HR
RO SYSTEM

DRAWING TITLE :

PROCESS INSTRUMENTATION DIAGRAM

CONTRACTOR :

DYNALON ENGINEERING SDN BHD
NO 5, JALAN P2/19A,BANDAR TEKNOLOGI KAJANG,
43500 SEMENYIH SELANGOR , MALAYSIA .
TEL : +603-87236991 / 7991 FAX : +603-87248991

THIS DRAWING IS THE PROPERTY OF DYNALON ENGINEERING SDN BHD. THE INFORMATION CONTAINED HEREIN SHALL NOT BE USED OR COPIED IN ANY MANNER WITHOUT THE WRITTEN PERMISSION OF DYNALON ENGINEERING SDN BHD.

DESIGNED BY	CH SHO	APPROVED BY	
DRAWN BY	JUNE	SCALE	NTS
DATE	19.07.2018	DRAWING NO.	MNA/181151-5 REV-17

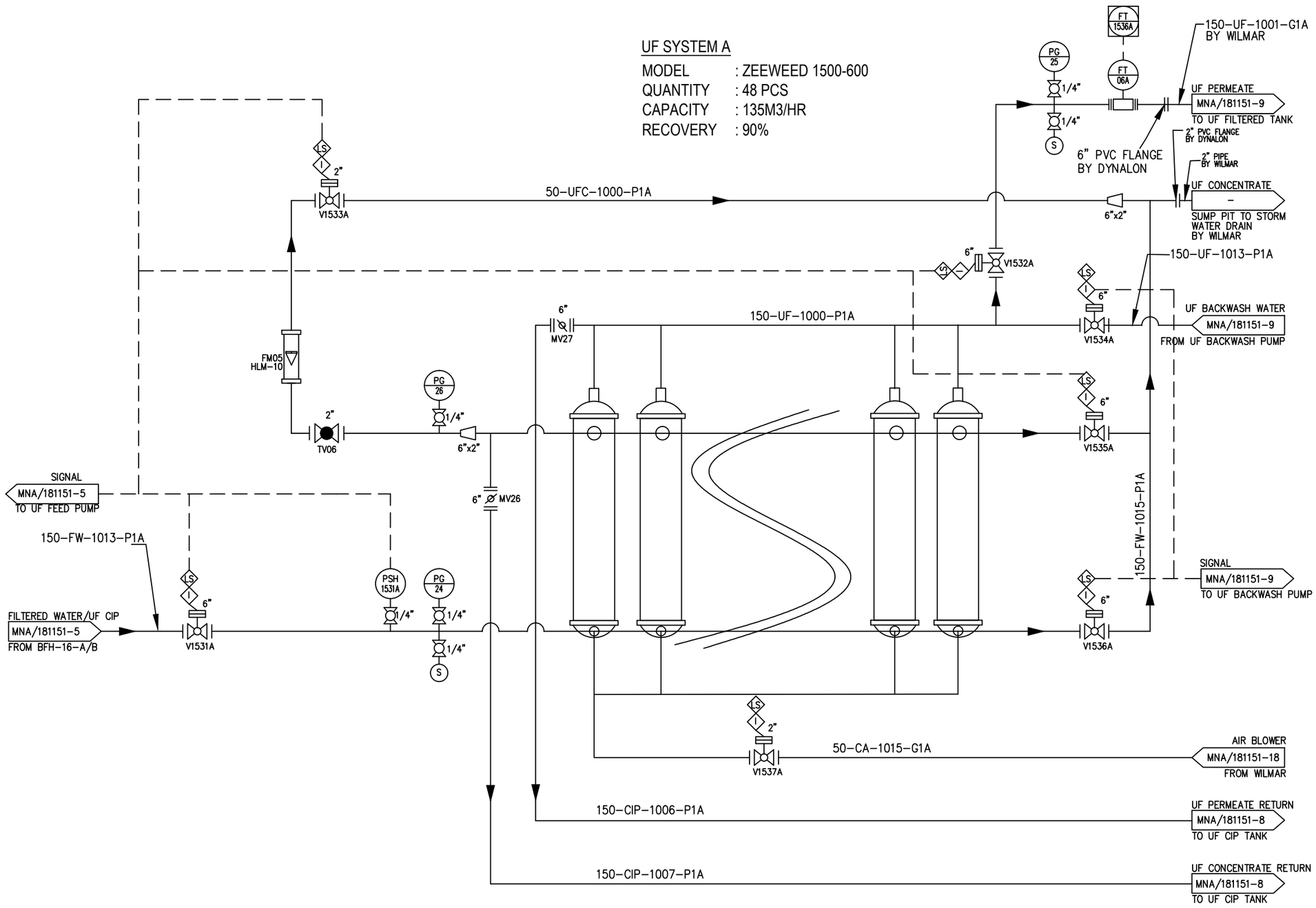

NOTE: ALL PIPELINE TO SUMP PIT BY WILMAR

LEGEND

REV	DATE	REMARKS
REV-17	14/11/2018	CHANGE TAG NO. / RELOCATE FT1535A
REV-17	14/11/2018	RELOCATE V1533A

OWNER :

CLIENT :

WILMAR MNA SERANG

LOCATION :

SERANG, INDONESIA

PROJECT NAME :

2X200M3/HR AMF, ACP & 2X135M3/HR UF & 2X100M3/HR RO SYSTEM

DRAWING TITLE :

PROCESS INSTRUMENTATION DIAGRAM

CONTRACTOR :

DYNALON ENGINEERING SDN BHD
NO 5, JALAN P2/19A,BANDAR TEKNOLOGI KAJANG,
43500 SEMENYIH SELANGOR , MALAYSIA .
TEL : +603-87236991 / 7991 FAX : +603-87248991

THIS DRAWING IS THE PROPERTY OF DYNALON ENGINEERING SDN BHD. THE INFORMATION CONTAINED HEREIN SHALL NOT BE USED OR COPIED IN ANY MANNER WITHOUT THE WRITTEN PERMISSION OF DYNALON ENGINEERING SDN BHD.

DESIGNED BY	CH SHO	APPROVED BY		
DRAWN BY	JUNE	SCALE	NTS	
DATE	19.07.2018	DRAWING NO.	MNA/181151-6	REV-17

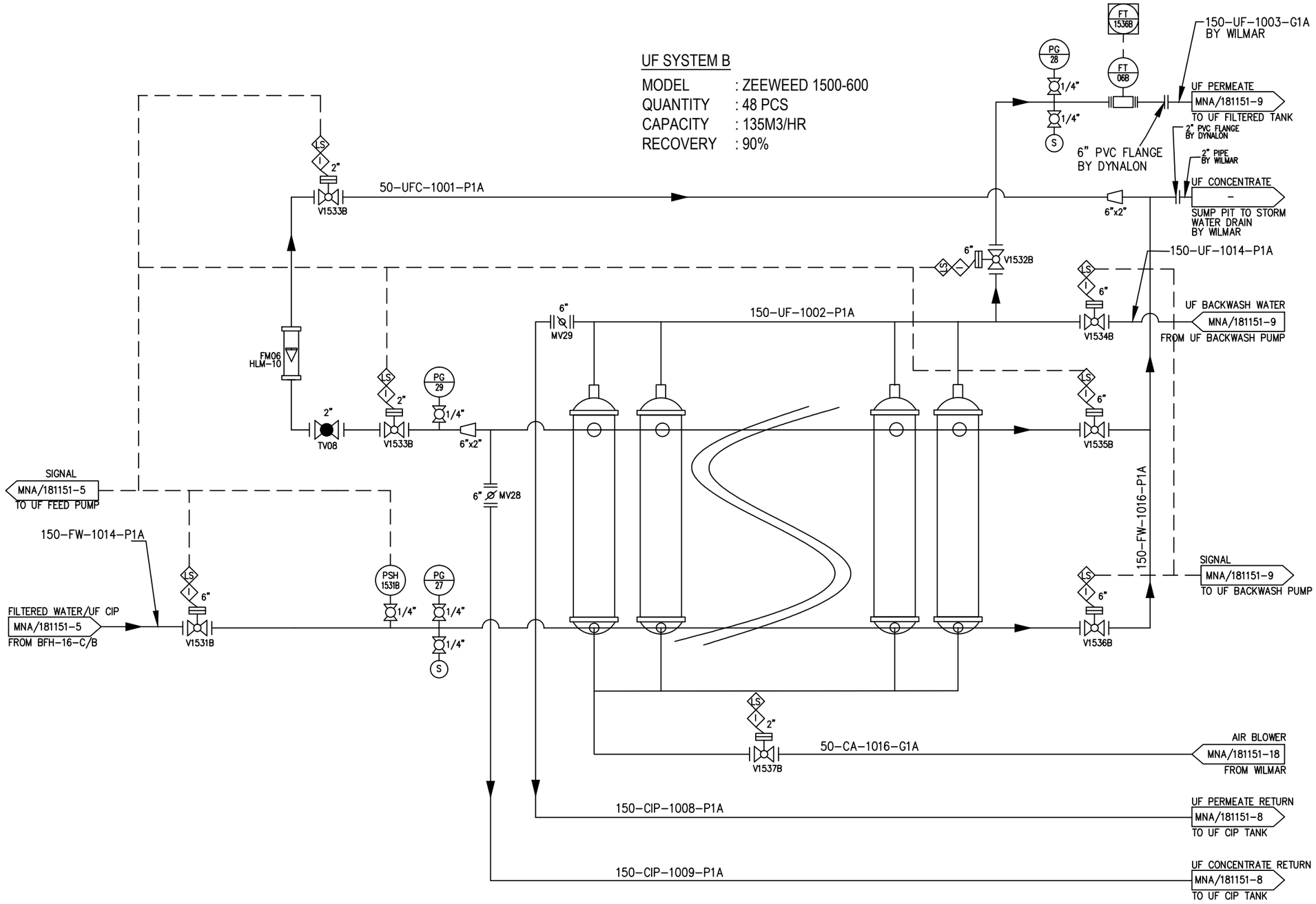

NOTE: ALL PIPELINE TO SUMP PIT BY WILMAR

LEGEND

REV	DATE	REMARKS
REV-17	14/11/2018	CHANGE TAG NO. / RELOCATE FT1535B
REV-17	14/11/2018	RELOCATE V1533B

OWNER :

CLIENT :

WILMAR MNA SERANG

LOCATION :

SERANG, INDONESIA

PROJECT NAME :

2X200M3/HR AMF, ACP & 2X135M3/HR UF & 2X100M3/HR RO SYSTEM

DRAWING TITLE :

PROCESS INSTRUMENTATION DIAGRAM

CONTRACTOR :

DYNALON ENGINEERING SDN BHD
NO 5, JALAN P2/19A,BANDAR TEKNOLOGI KAJANG,
43500 SEMENYIH SELANGOR , MALAYSIA .
TEL : +603-87236991 / 7991 FAX : +603-87248991

THIS DRAWING IS THE PROPERTY OF DYNALON ENGINEERING SDN BHD. THE INFORMATION CONTAINED HEREIN SHALL NOT BE USED OR COPIED IN ANY MANNER WITHOUT THE WRITTEN PERMISSION OF DYNALON ENGINEERING SDN BHD.

DESIGNED BY	CH SHO	APPROVED BY	
DRAWN BY	JUNE	SCALE	NTS
DATE	19.07.2018	DRAWING NO.	MNA/181151-7 REV-17

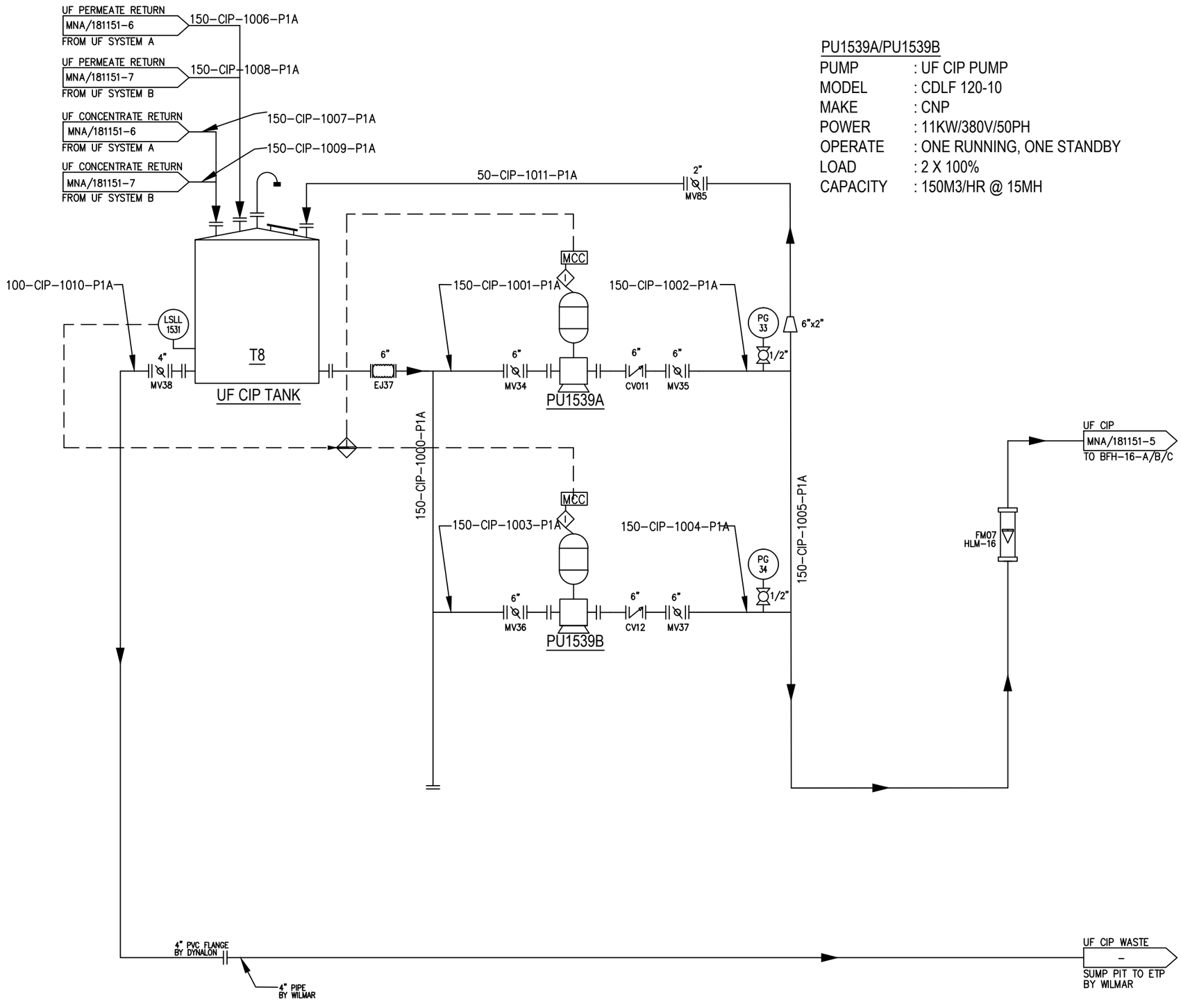

PU1539A/PU1539B

PUMP	: UF CIP PUMP
MODEL	: CDLF 120-10
MAKE	: CNP
POWER	: 11KW/380V/50PH
OPERATE	: ONE RUNNING, ONE STANDBY
LOAD	: 2 X 100%
CAPACITY	: 150M3/HR @ 15MH

NOTE: ALL PIPELINE TO SUMP PIT BY WILMAR

LEGEND

REV	DATE	REMARKS
REV-17	14/11/2018	CHANGE TAG NO.

OWNER :

CLIENT :

WILMAR MNA SERANG

LOCATION :

SERANG, INDONESIA

PROJECT NAME :

2X200M3/HR AMF, ACP & 2X135M3/HR UF & 2X100M3/HR RO SYSTEM

DRAWING TITLE :

PROCESS INSTRUMENTATION DIAGRAM

CONTRACTOR :

DYNALON ENGINEERING SDN BHD
NO 5, JALAN P2/19A,BANDAR TEKNOLOGI KAJANG,
43500 SEMENYIH SELANGOR , MALAYSIA .
TEL : +603-87236991 / 7991 FAX : +603-87248991

THIS DRAWING IS THE PROPERTY OF DYNALON ENGINEERING SDN BHD. THE INFORMATION CONTAINED HEREIN SHALL NOT BE USED OR COPIED IN ANY MANNER WITHOUT THE WRITTEN PERMISSION OF DYNALON ENGINEERING SDN BHD.

DESIGNED BY	CH SHO	APPROVED BY		
DRAWN BY	JUNE	SCALE	NTS	
DATE	19.07.2018	DRAWING NO.	MNA/181151-8	REV-17

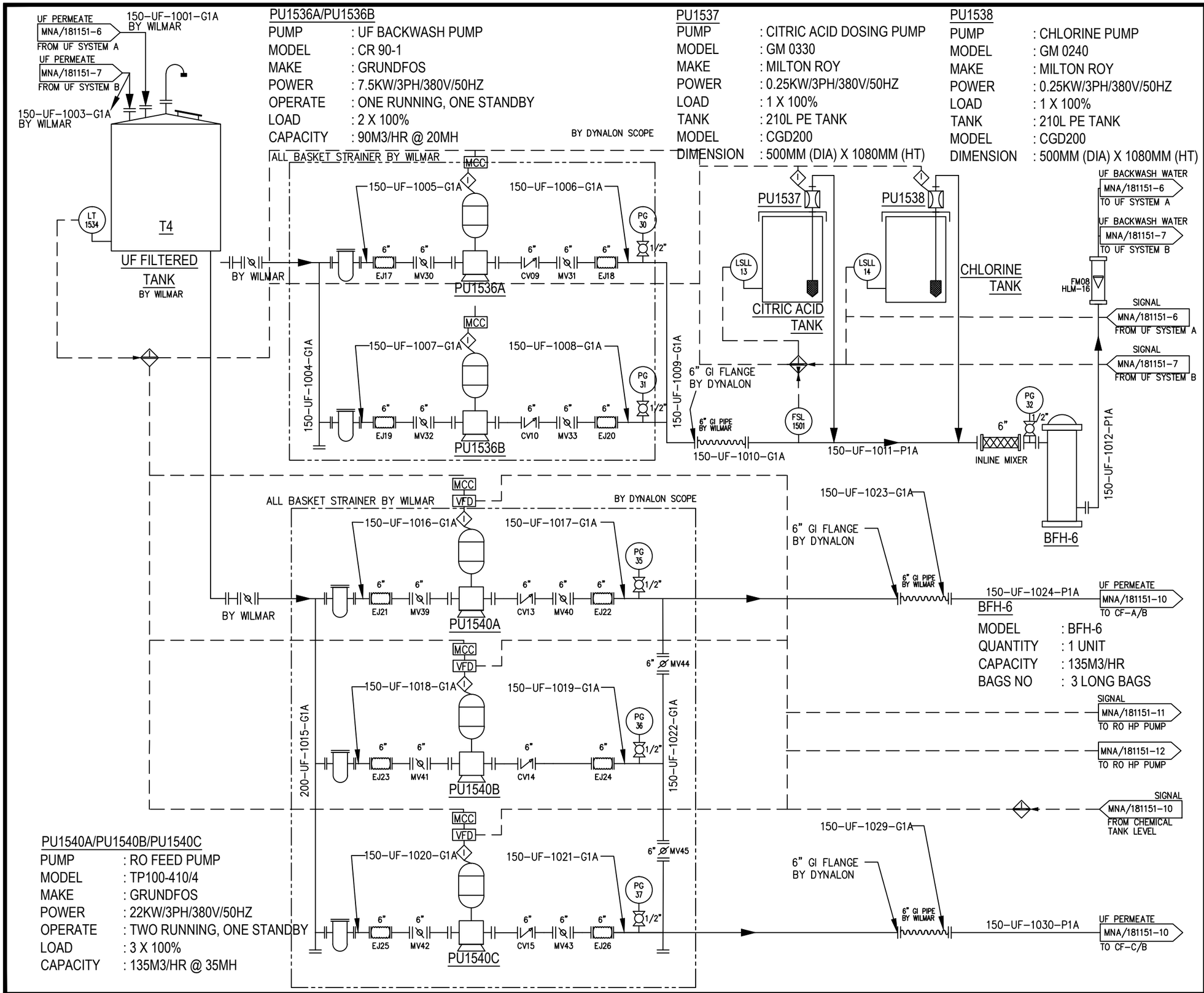

PU1536A/PU1536B

PUMP	: UF BACKWASH PUMP
MODEL	: CR 90-1
MAKE	: GRUNDFOS
POWER	: 7.5KW/3PH/380V/50HZ
OPERATE	: ONE RUNNING, ONE STANDBY
LOAD	: 2 X 100%
CAPACITY	: 90M3/HR @ 20MH

PU1537

PUMP	: CITRIC ACID DOSING PUMP
MODEL	: GM 0330
MAKE	: MILTON ROY
POWER	: 0.25KW/3PH/380V/50HZ
LOAD	: 1 X 100%
TANK	: 210L PE TANK
MODEL	: CGD200
DIMENSION	: 500MM (DIA) X 1080MM (HT)

PU1538

PUMP	: CHLORINE PUMP
MODEL	: GM 0240
MAKE	: MILTON ROY
POWER	: 0.25KW/3PH/380V/50HZ
LOAD	: 1 X 100%
TANK	: 210L PE TANK
MODEL	: CGD200
DIMENSION	: 500MM (DIA) X 1080MM (HT)

BFH-6

MODEL	: BFH-6
QUANTITY	: 1 UNIT
CAPACITY	: 135M3/HR
BAGS NO	: 3 LONG BAGS

PU1540A/PU1540B/PU1540C

PUMP	: RO FEED PUMP
MODEL	: TP100-410/4
MAKE	: GRUNDFOS
POWER	: 22KW/3PH/380V/50HZ
OPERATE	: TWO RUNNING, ONE STANDBY
LOAD	: 3 X 100%
CAPACITY	: 135M3/HR @ 35MH

LEGEND

REV	DATE	REMARKS
REV-17	14/11/2018	CHANGE TAG NO.

OWNER :

CLIENT :

WILMAR MNA SERANG

LOCATION :

SERANG, INDONESIA

PROJECT NAME :

2X200M3/HR AMF, ACP & 2X135M3/HR UF & 2X100M3/HR RO SYSTEM

DRAWING TITLE :

PROCESS INSTRUMENTATION DIAGRAM

CONTRACTOR :

DYNALON ENGINEERING SDN BHD
NO 5, JALAN P2/19A,BANDAR TEKNOLOGI KAJANG,
43500 SEMENYIH SELANGOR , MALAYSIA .
TEL : +603-87236991 / 7991 FAX : +603-87248991

THIS DRAWING IS THE PROPERTY OF DYNALON ENGINEERING SDN BHD. THE INFORMATION CONTAINED HEREIN SHALL NOT BE USED OR COPIED IN ANY MANNER WITHOUT THE WRITTEN PERMISSION OF DYNALON ENGINEERING SDN BHD.

DESIGNED BY	CH SHO	APPROVED BY	
DRAWN BY	JUNE	SCALE	NTS
DATE	19.07.2018	DRAWING NO.	MNA/181151-9 REV-17

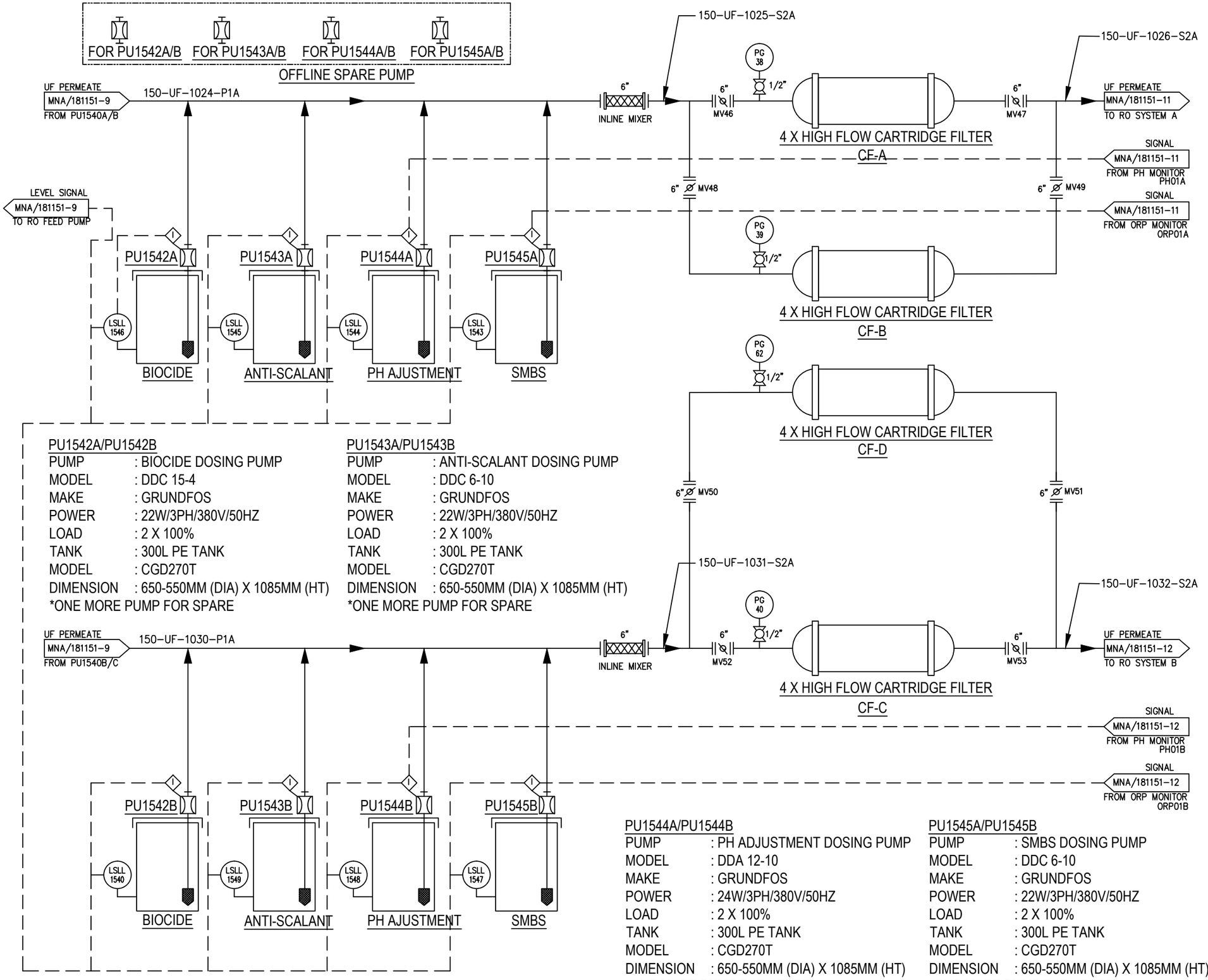

PU1542A/PU1542B

PUMP	: BIOCIDE DOSING PUMP
MODEL	: DDC 15-4
MAKE	: GRUNDFOS
POWER	: 22W/3PH/380V/50HZ
LOAD	: 2 X 100%
TANK	: 300L PE TANK
MODEL	: CGD270T
DIMENSION	: 650-550MM (DIA) X 1085MM (HT)

*ONE MORE PUMP FOR SPARE

PU1543A/PU1543B

PUMP	: ANTI-SCALANT DOSING PUMP
MODEL	: DDC 6-10
MAKE	: GRUNDFOS
POWER	: 22W/3PH/380V/50HZ
LOAD	: 2 X 100%
TANK	: 300L PE TANK
MODEL	: CGD270T
DIMENSION	: 650-550MM (DIA) X 1085MM (HT)

*ONE MORE PUMP FOR SPARE

PU1544A/PU1544B

PUMP	: PH ADJUSTMENT DOSING PUMP
MODEL	: DDA 12-10
MAKE	: GRUNDFOS
POWER	: 24W/3PH/380V/50HZ
LOAD	: 2 X 100%
TANK	: 300L PE TANK
MODEL	: CGD270T
DIMENSION	: 650-550MM (DIA) X 1085MM (HT)

*ONE MORE PUMP FOR SPARE

PU1545A/PU1545B

PUMP	: SMBS DOSING PUMP
MODEL	: DDC 6-10
MAKE	: GRUNDFOS
POWER	: 22W/3PH/380V/50HZ
LOAD	: 2 X 100%
TANK	: 300L PE TANK
MODEL	: CGD270T
DIMENSION	: 650-550MM (DIA) X 1085MM (HT)

*ONE MORE PUMP FOR SPARE

LEGEND

REV	DATE	REMARKS
REV-17	14/11/2018	CHANGE TAG NO.

OWNER :

CLIENT :

WILMAR MNA SERANG

LOCATION :

SERANG, INDONESIA

PROJECT NAME :

2X200M3/HR AMF, ACP &
2X135M3/HR UF & 2X100M3/HR
RO SYSTEM

DRAWING TITLE :

PROCESS INSTRUMENTATION DIAGRAM

CONTRACTOR :

DYNALON ENGINEERING SDN BHD
NO 5, JALAN P2/19A,BANDAR TEKNOLOGI KAJANG,
43500 SEMENYIH SELANGOR , MALAYSIA .
TEL : +603-87236991 / 7991 FAX : +603-87248991

THIS DRAWING IS THE PROPERTY OF DYNALON ENGINEERING SDN BHD. THE INFORMATION CONTAINED HEREIN SHALL NOT BE USED OR COPIED IN ANY MANNER WITHOUT THE WRITTEN PERMISSION OF DYNALON ENGINEERING SDN BHD.

DESIGNED BY	CH SHO	APPROVED BY		
DRAWN BY	JUNE	SCALE	NTS	
DATE	19.07.2018	DRAWING NO.	MNA/181151-10	REV-17

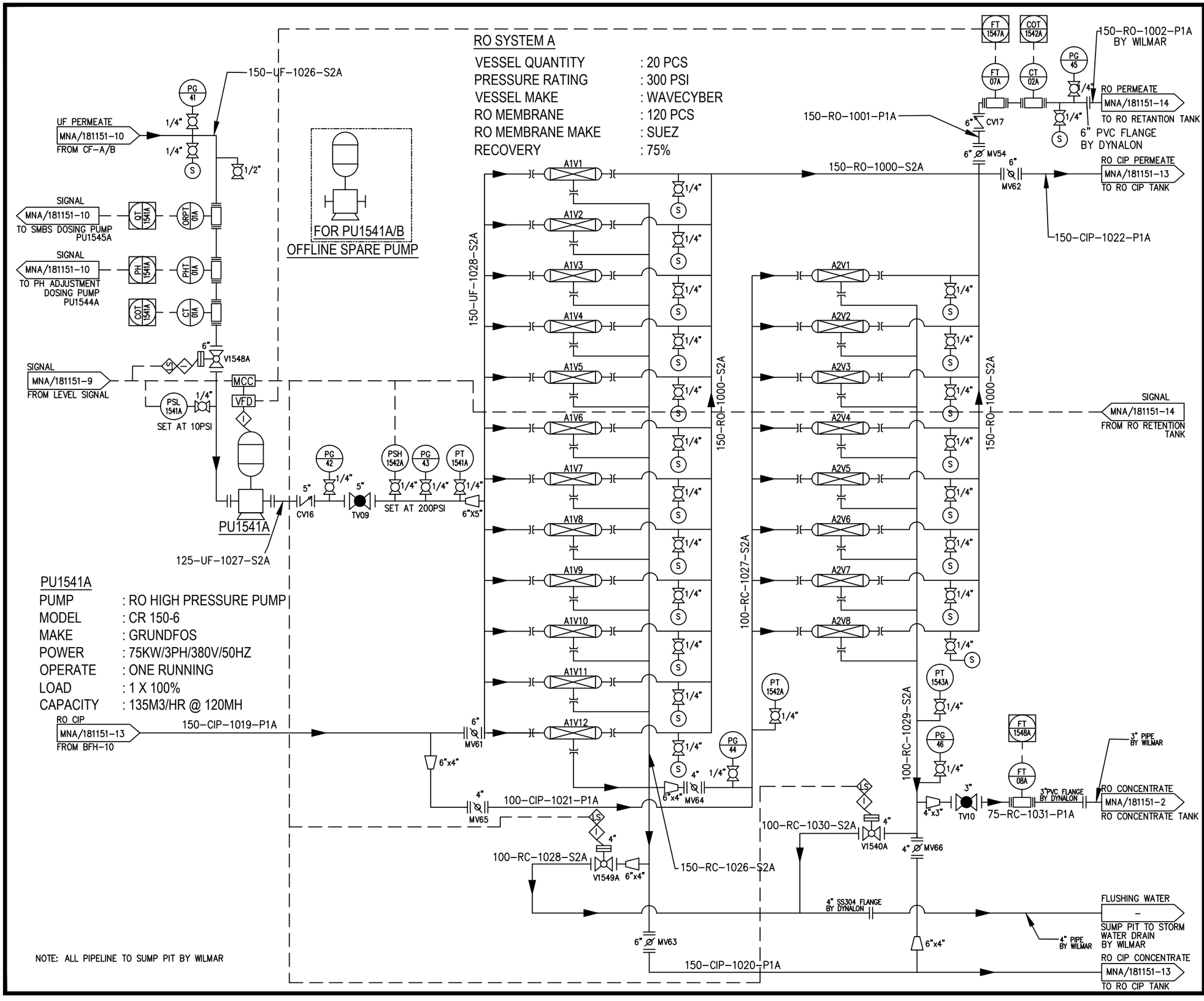

LEGEND

REV	DATE	REMARKS
REV-17	14/11/2018	CHANGE TAG NO.

OWNER :

CLIENT :

WILMAR MNA SERANG

LOCATION :

SERANG, INDONESIA

PROJECT NAME :

2X200M3/HR AMF, ACP & 2X135M3/HR UF & 2X100M3/HR RO SYSTEM

DRAWING TITLE :

PROCESS INSTRUMENTATION DIAGRAM

CONTRACTOR :

DYNALON ENGINEERING SDN BHD
NO 5, JALAN P2/19A,BANDAR TEKNOLOGI KAJANG,
43500 SEMENYIH SELANGOR , MALAYSIA .
TEL : +603-87236991 / 7991 FAX : +603-87248991

THIS DRAWING IS THE PROPERTY OF DYNALON ENGINEERING SDN BHD. THE INFORMATION CONTAINED HEREIN SHALL NOT BE USED OR COPIED IN ANY MANNER WITHOUT THE WRITTEN PERMISSION OF DYNALON ENGINEERING SDN BHD.

DESIGNED BY	CH SHO	APPROVED BY		
DRAWN BY	JUNE	SCALE	NTS	
DATE	19.07.2018	DRAWING NO.	MNA/181151-11	REV-17

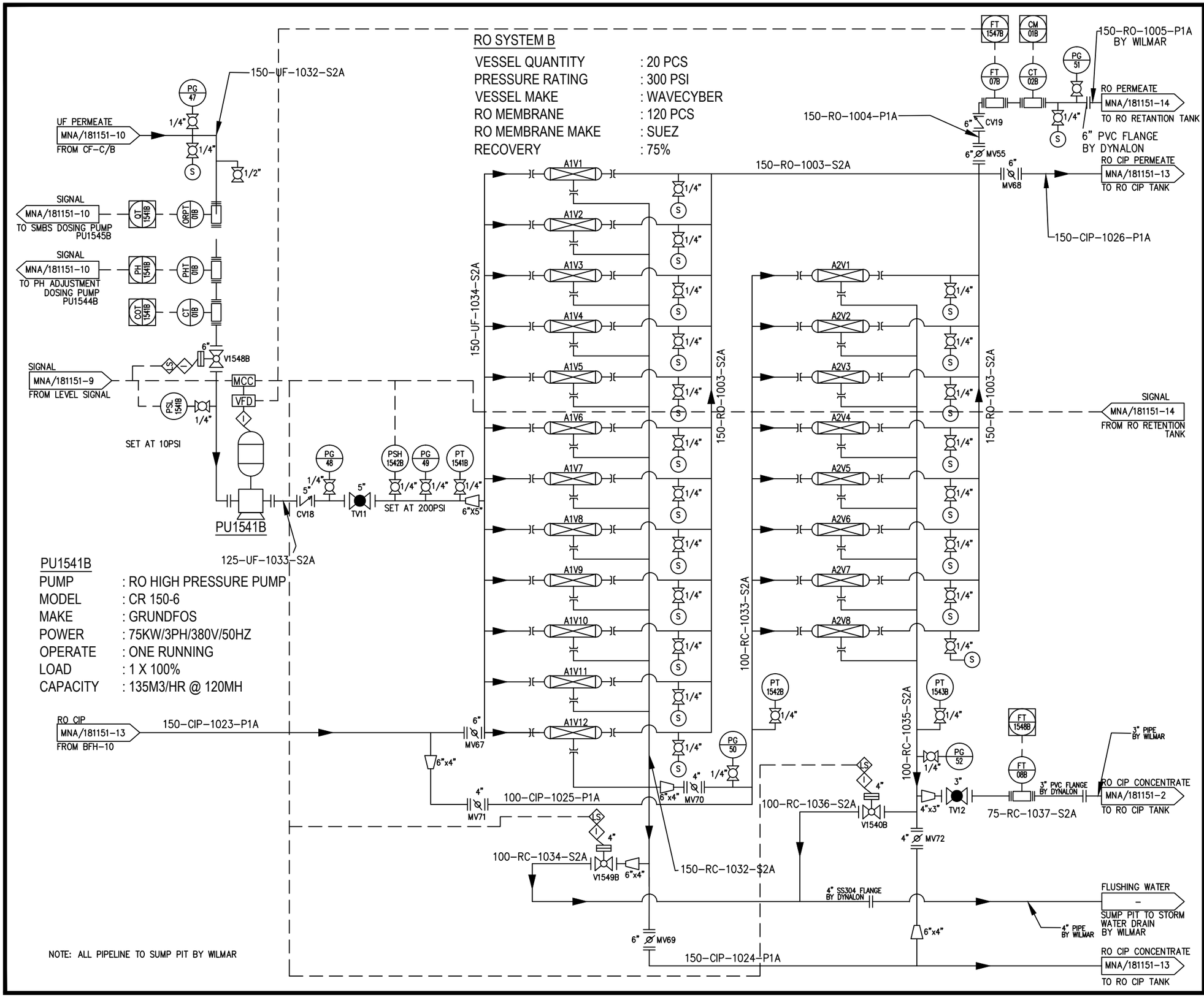

LEGEND

REV	DATE	REMARKS
REV-17	14/11/2018	CHANGE TAG NO.

OWNER :

CLIENT :

WILMAR MNA SERANG

LOCATION :

SERANG, INDONESIA

PROJECT NAME :

2X200M3/HR AMF, ACP & 2X135M3/HR UF & 2X100M3/HR RO SYSTEM

DRAWING TITLE :

PROCESS INSTRUMENTATION DIAGRAM

CONTRACTOR :

DYNALON ENGINEERING SDN BHD
NO 5, JALAN P2/19A,BANDAR TEKNOLOGI KAJANG,
43500 SEMENYIH SELANGOR , MALAYSIA .
TEL : +603-87236991 / 7991 FAX : +603-87248991

THIS DRAWING IS THE PROPERTY OF DYNALON ENGINEERING SDN BHD. THE INFORMATION CONTAINED HEREIN SHALL NOT BE USED OR COPIED IN ANY MANNER WITHOUT THE WRITTEN PERMISSION OF DYNALON ENGINEERING SDN BHD.

DESIGNED BY	CH SHO	APPROVED BY		
DRAWN BY	JUNE	SCALE	NTS	
DATE	19.07.2018	DRAWING NO.	MNA/181151-12	REV-17

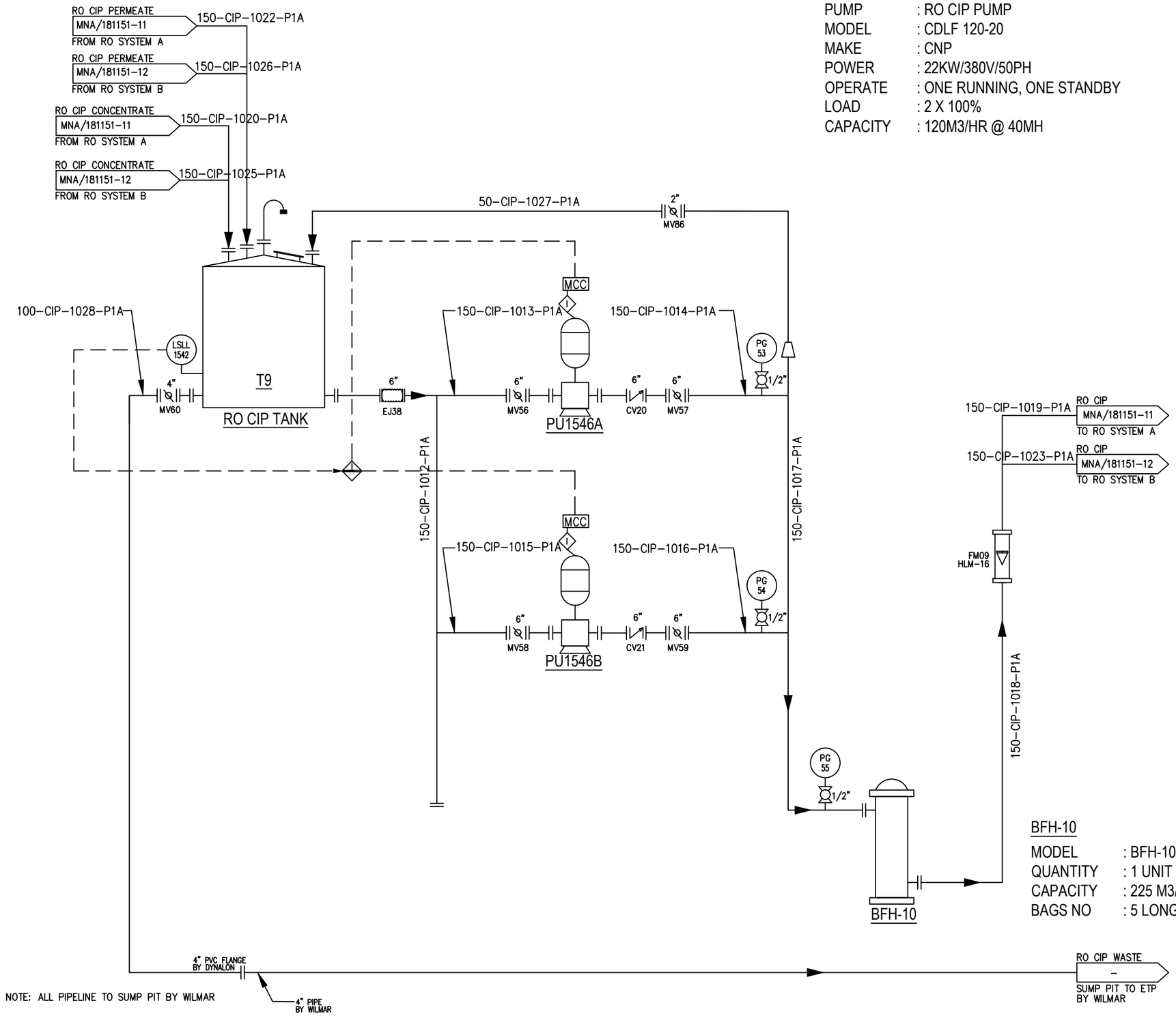

NOTE: ALL PIPELINE TO SUMP PIT BY WILMAR

PU1546A/PU1546B

PUMP	: RO CIP PUMP
MODEL	: CDLF 120-20
MAKE	: CNP
POWER	: 22KW/380V/50PH
OPERATE	: ONE RUNNING, ONE STANDBY
LOAD	: 2 X 100%
CAPACITY	: 120M3/HR @ 40MH

BFH-10

MODEL	: BFH-10
QUANTITY	: 1 UNIT
CAPACITY	: 225 M3/HR
BAGS NO	: 5 LONG BAGS

LEGEND

REV	DATE	REMARKS
REV-17	14/11/2018	CHANGE TAG NO.

OWNER :

CLIENT :

WILMAR MNA SERANG

LOCATION :

SERANG, INDONESIA

PROJECT NAME :

2X200M3/HR AMF, ACP & 2X135M3/HR UF & 2X100M3/HR RO SYSTEM

DRAWING TITLE :

PROCESS INSTRUMENTATION DIAGRAM

CONTRACTOR :

DYNALON ENGINEERING SDN BHD
NO 5, JALAN P2/19A,BANDAR TEKNOLOGI KAJANG,
43500 SEMENYIH SELANGOR , MALAYSIA .
TEL : +603-87236991 / 7991 FAX : +603-87248991

THIS DRAWING IS THE PROPERTY OF DYNALON ENGINEERING SDN BHD. THE INFORMATION CONTAINED HEREIN SHALL NOT BE USED OR COPIED IN ANY MANNER WITHOUT THE WRITTEN PERMISSION OF DYNALON ENGINEERING SDN BHD.

DESIGNED BY	CH SHO	APPROVED BY		
DRAWN BY	JUNE	SCALE	NTS	
DATE	19.07.2018	DRAWING NO.	MNA/181151-13	REV-17

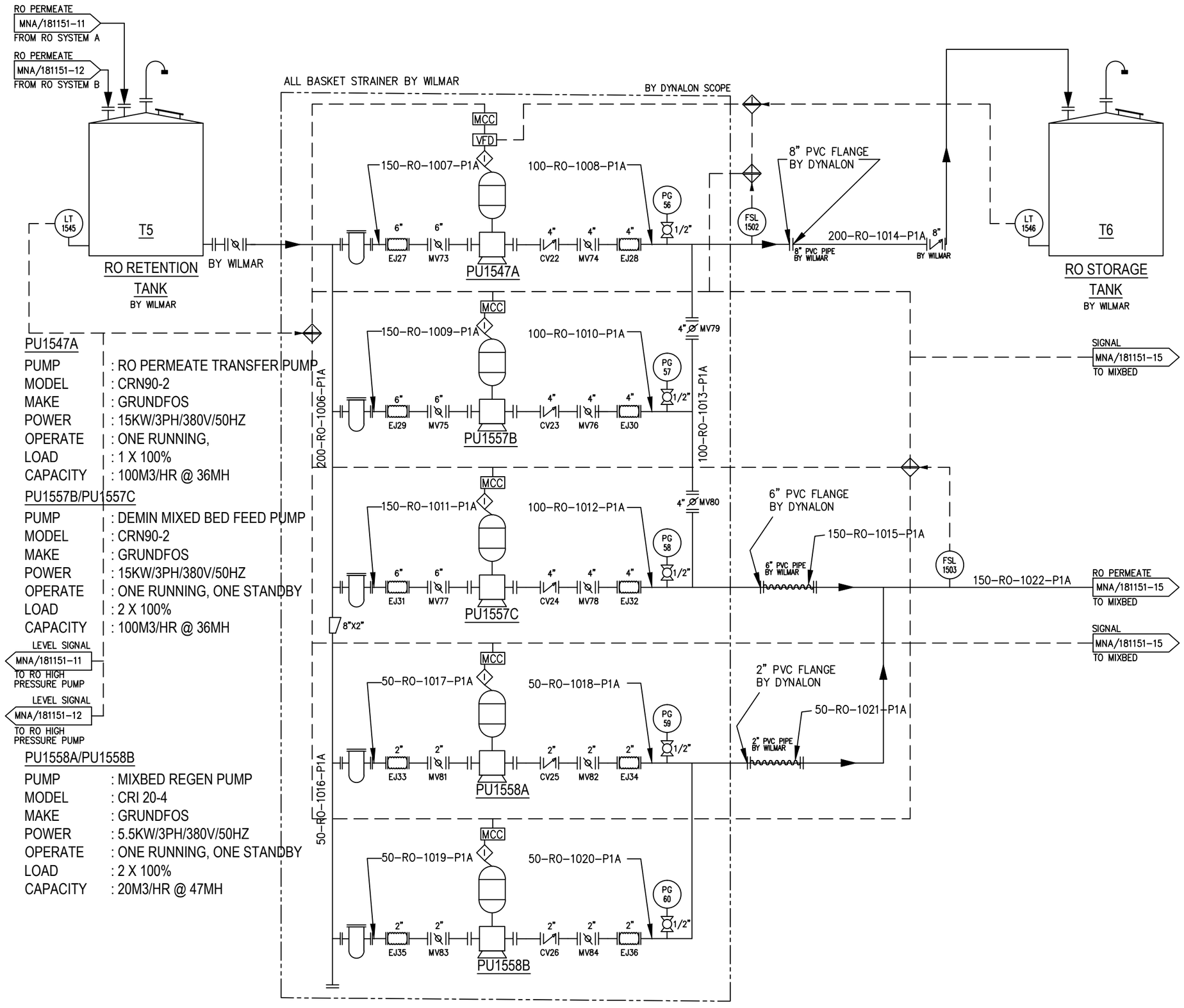

PU1547A

PUMP	: RO PERMEATE TRANSFER PUMP
MODEL	: CRN90-2
MAKE	: GRUNDFOS
POWER	: 15KW/3PH/380V/50HZ
OPERATE	: ONE RUNNING,
LOAD	: 1 X 100%
CAPACITY	: 100M3/HR @ 36MH

PU1557B/PU1557C

PUMP	: DEMIN MIXED BED FEED PUMP
MODEL	: CRN90-2
MAKE	: GRUNDFOS
POWER	: 15KW/3PH/380V/50HZ
OPERATE	: ONE RUNNING, ONE STANDBY
LOAD	: 2 X 100%
CAPACITY	: 100M3/HR @ 36MH

PU1558A/PU1558B

PUMP	: MIXBED REGEN PUMP
MODEL	: CRI 20-4
MAKE	: GRUNDFOS
POWER	: 5.5KW/3PH/380V/50HZ
OPERATE	: ONE RUNNING, ONE STANDBY
LOAD	: 2 X 100%
CAPACITY	: 20M3/HR @ 47MH

LEGEND

REV	DATE	REMARKS
REV-17	14/11/2018	CHANGE TAG NO.

OWNER :

CLIENT :

WILMAR MNA SERANG

LOCATION :

SERANG, INDONESIA

PROJECT NAME :

2X200M3/HR AMF, ACP & 2X135M3/HR UF & 2X100M3/HR RO SYSTEM

DRAWING TITLE :

PROCESS INSTRUMENTATION DIAGRAM

CONTRACTOR :

DYNALON ENGINEERING SDN BHD
NO 5, JALAN P2/19A,BANDAR TEKNOLOGI KAJANG,
43500 SEMENYIH SELANGOR , MALAYSIA .
TEL : +603-87236991 / 7991 FAX : +603-87248991

THIS DRAWING IS THE PROPERTY OF DYNALON ENGINEERING SDN BHD. THE INFORMATION CONTAINED HEREIN SHALL NOT BE USED OR COPIED IN ANY MANNER WITHOUT THE WRITTEN PERMISSION OF DYNALON ENGINEERING SDN BHD.

DESIGNED BY	CH SHO	APPROVED BY		
DRAWN BY	JUNE	SCALE	NTS	
DATE	19.07.2018	DRAWING NO.	MNA/181151-14	REV-17

MIX BED SYSTEM

MODEL	:	AMD-2500
VESSEL	:	CARBON STEEL
CAPACITY	:	100M3/HR
DIMENSION	:	1500MM(DIA) X 3000MM (SH.HT)

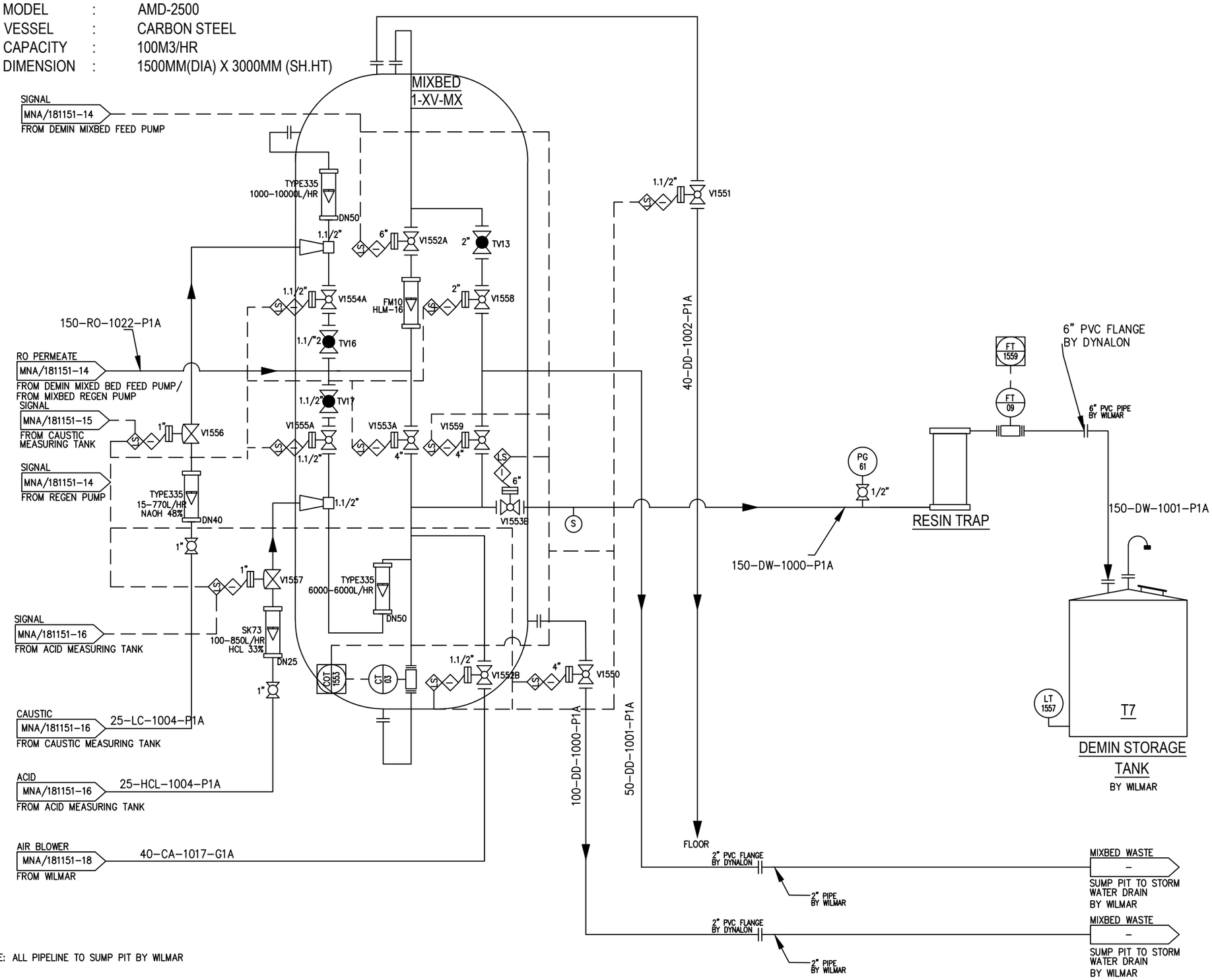

NOTE: ALL PIPELINE TO SUMP PIT BY WILMAR

LEGEND

REV	DATE	REMARKS
REV-17	14/11/2018	CHANGE TAG NO.

OWNER :

CLIENT :

WILMAR MNA SERANG

LOCATION :

SERANG, INDONESIA

PROJECT NAME :

2X200M3/HR AMF, ACP &
2X135M3/HR UF & 2X100M3/HR
RO SYSTEM

DRAWING TITLE :

PROCESS INSTRUMENTATION DIAGRAM

CONTRACTOR :

DYNALON ENGINEERING SDN BHD
NO 5, JALAN P2/19A,BANDAR TEKNOLOGI KAJANG,
43500 SEMENYIH SELANGOR , MALAYSIA .
TEL : +603-87236991 / 7991 FAX : +603-87248991

THIS DRAWING IS THE PROPERTY OF DYNALON ENGINEERING SDN BHD. THE INFORMATION CONTAINED HEREIN SHALL NOT BE USED OR COPIED IN ANY MANNER WITHOUT THE WRITTEN PERMISSION OF DYNALON ENGINEERING SDN BHD.

DESIGNED BY	CH SHO	APPROVED BY		
DRAWN BY	JUNE	SCALE	NTS	
DATE	19.07.2018	DRAWING NO.	MNA/181151-15	REV-17

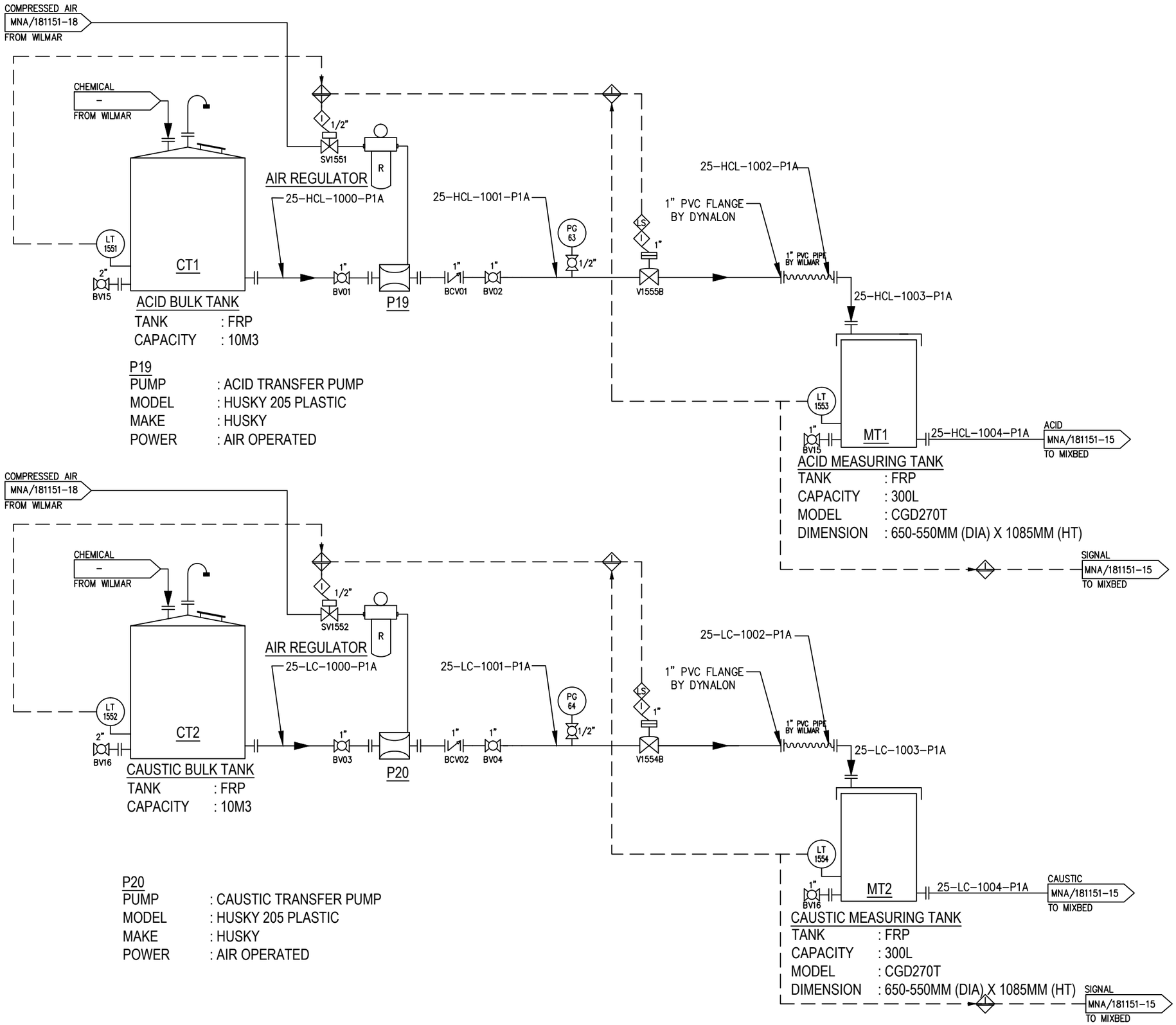

LEGEND

REV	DATE	REMARKS
REV-17	14/11/2018	CHANGE TAG NO. / ADD TANK DRAIN

OWNER :

CLIENT :

WILMAR MNA SERANG

LOCATION :

SERANG, INDONESIA

PROJECT NAME :

2X200M3/HR AMF, ACP & 2X135M3/HR UF & 2X100M3/HR RO SYSTEM

DRAWING TITLE :

PROCESS INSTRUMENTATION DIAGRAM

CONTRACTOR :

DYNALON ENGINEERING SDN BHD
NO 5, JALAN P2/19A,BANDAR TEKNOLOGI KAJANG,
43500 SEMENYIH SELANGOR , MALAYSIA .
TEL : +603-87236991 / 7991 FAX : +603-87248991

THIS DRAWING IS THE PROPERTY OF DYNALON ENGINEERING SDN BHD. THE INFORMATION CONTAINED HEREIN SHALL NOT BE USED OR COPIED IN ANY MANNER WITHOUT THE WRITTEN PERMISSION OF DYNALON ENGINEERING SDN BHD.

DESIGNED BY	CH SHO	APPROVED BY		
DRAWN BY	JUNE	SCALE	NTS	
DATE	19.07.2018	DRAWING NO.	MNA/181151-16	REV-17

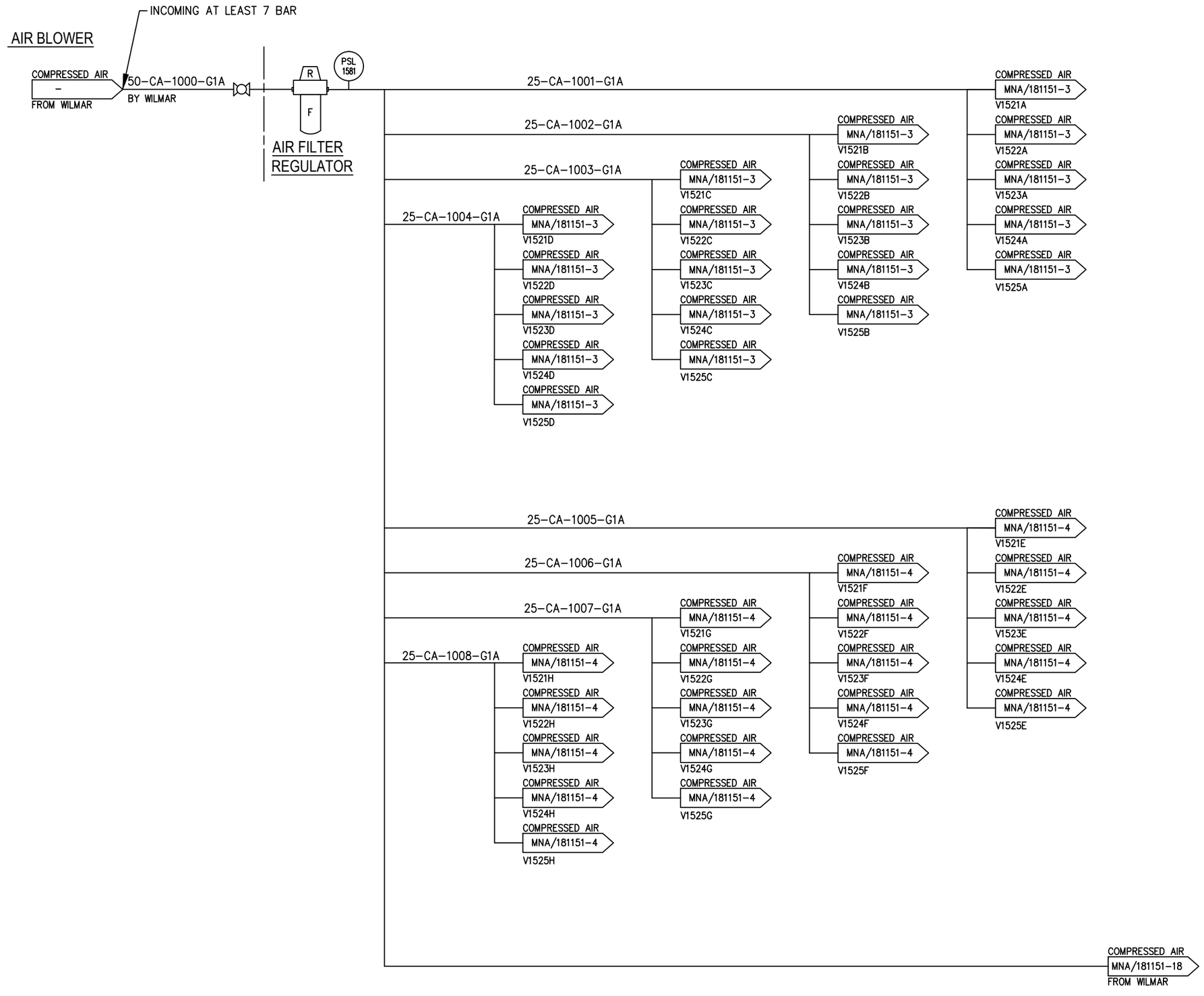

LEGEND

REV	DATE	REMARKS
REV-17	14/11/2018	CHANGE TAG NO.

OWNER :

CLIENT :

WILMAR MNA SERANG

LOCATION :

SERANG, INDONESIA

PROJECT NAME :

2X200M3/HR AMF, ACP & 2X135M3/HR UF & 2X100M3/HR RO SYSTEM

DRAWING TITLE :

PROCESS INSTRUMENTATION DIAGRAM

CONTRACTOR :

DYNALON ENGINEERING SDN BHD
NO 5, JALAN P2/19A,BANDAR TEKNOLOGI KAJANG,
43500 SEMENYIH SELANGOR , MALAYSIA .
TEL : +603-87236991 / 7991 FAX : +603-87248991

THIS DRAWING IS THE PROPERTY OF DYNALON ENGINEERING SDN BHD. THE INFORMATION CONTAINED HEREIN SHALL NOT BE USED OR COPIED IN ANY MANNER WITHOUT THE WRITTEN PERMISSION OF DYNALON ENGINEERING SDN BHD.

DESIGNED BY	CH SHO	APPROVED BY		
DRAWN BY	JUNE	SCALE	NTS	
DATE	19.07.2018	DRAWING NO.	MNA/181151-17	REV-17

AIR BLOWER

LEGEND

REV	DATE	REMARKS
REV-17	14/11/2018	CHANGE TAG NO.

OWNER :

CLIENT :

WILMAR MNA SERANG

LOCATION :

SERANG, INDONESIA

PROJECT NAME :

2X200M3/HR AMF, ACP & 2X135M3/HR UF & 2X100M3/HR RO SYSTEM

DRAWING TITLE :

PROCESS INSTRUMENTATION DIAGRAM

CONTRACTOR :

DYNALON ENGINEERING SDN BHD
NO 5, JALAN P2/19A,BANDAR TEKNOLOGI KAJANG,
43500 SEMENYIH SELANGOR , MALAYSIA .
TEL : +603-87236991 / 7991 FAX : +603-87248991

THIS DRAWING IS THE PROPERTY OF DYNALON ENGINEERING SDN BHD. THE INFORMATION CONTAINED HEREIN SHALL NOT BE USED OR COPIED IN ANY MANNER WITHOUT THE WRITTEN PERMISSION OF DYNALON ENGINEERING SDN BHD.

DESIGNED BY	CH SHO	APPROVED BY		
DRAWN BY	JUNE	SCALE	NTS	
DATE	19.07.2018	DRAWING NO.	MNA/181151-18	REV-17

AIR BLOWER

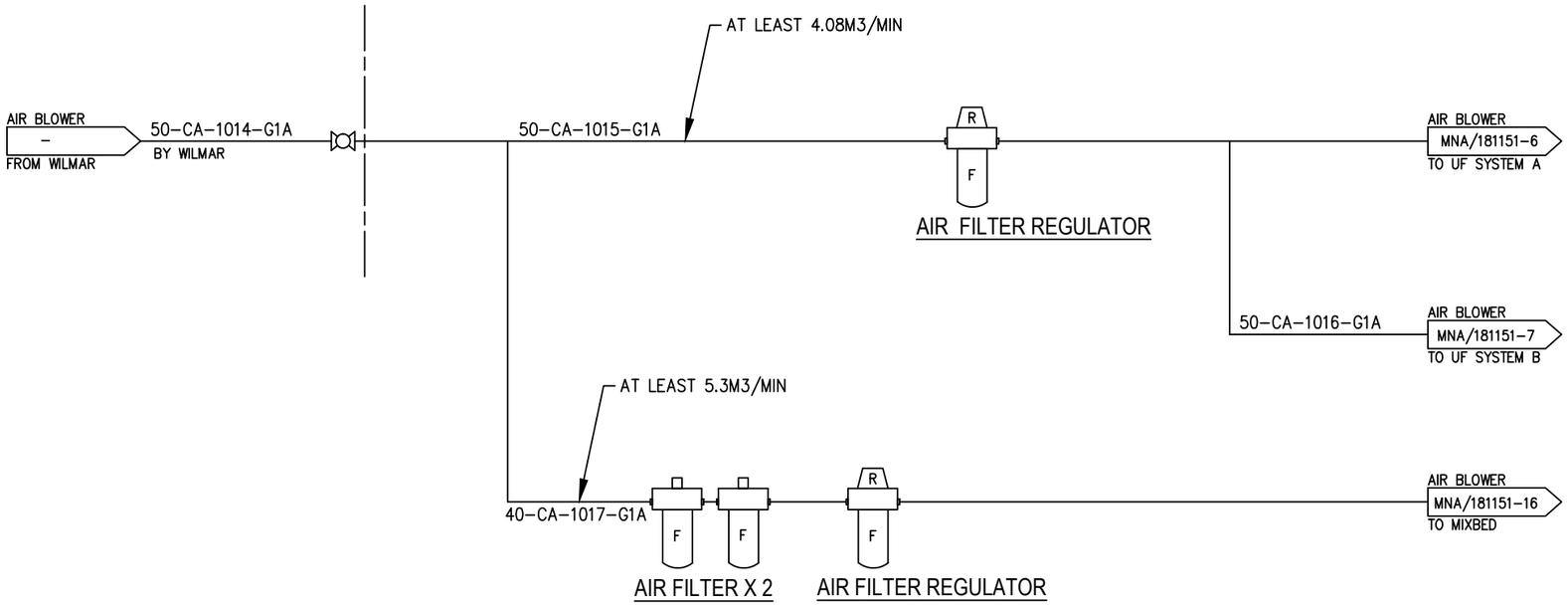

LEGEND

REV	DATE	REMARKS
REV–17	14/11/2018	CHANGE TAG NO., REMOVE FILTER

OWNER :

CLIENT :

WILMAR MNA SERANG

LOCATION :

SERANG, INDONESIA

PROJECT NAME :

2X200M3/HR AMF, ACP & 2X135M3/HR UF & 2X100M3/HR RO SYSTEM

DRAWING TITLE :

PROCESS INSTRUMENTATION DIAGRAM

CONTRACTOR :

DYNALON ENGINEERING SDN BHD
NO 5, JALAN P2/19A,BANDAR TEKNOLOGI KAJANG,
43500 SEMENYIH SELANGOR , MALAYSIA .
TEL : +603-87236991 / 7991 FAX : +603-87248991

THIS DRAWING IS THE PROPERTY OF DYNALON ENGINEERING SDN BHD. THE INFORMATION CONTAINED HEREIN SHALL NOT BE USED OR COPIED IN ANY MANNER WITHOUT THE WRITTEN PERMISSION OF DYNALON ENGINEERING SDN BHD.

DESIGNED BY	CH SHO	APPROVED BY		
DRAWN BY	JUNE	SCALE	NTS	
DATE	19.07.2018	DRAWING NO.	MNA/181151–19	REV–17

VALVE SYMBOLS

- Ball Valve
- Globe Valve
- Gate Valve
- Check Valve
- Needle Valve
- Butterlfly Valve
- Plug Valve
- Knife Valve
- Diaphragm Valve
- Ball Float Valve
- Actuator Valve c/w Namur Valve & Limit Switch
- Control Valve
- Sampling Valve
- Solenoid Valve

SELF-ACTUATED DEVICES

- Pressure Relief or Safety Valve
- Vacuum Relief Valve
- Breather Valve
- Pressure Reducing Regulator (Self Contained)
- Back Pressure Regulator (Self Contained)
- Pressure Reducing Regulator W/ External Tap
- Back Pressure Regulator W/ External Tap

STEAM UTILITIES SYMBOLS

- Ball Float Steam Trap
- Steam Separator
- Thermostatic Steam Trap

PIPING SPECIALITY ITEMS

- Y-Type Strainer
- Basket Type Strainer
- T-Type Strainer
- Oriface
- Expantion Joint
- Flexible Hose
- Sight Glass
- Silencer

PIPING FITTINGS

- Concentric Reducer
- Eccentric Reducer
- Cap
- Flange
- Blind Flange
- Hose Connection

INSTRUMENT LINE SYMBOLS

- Pneumatic Signal
- Electric Signal
- Connection to Process Or Instrument Supply
- Mechanical Link
- Software or Data Link
- Signal Line

PIPE LINE COLOR & SYMBOLS

- Process Water Line
- Olein Line
- Air Compressor Line
- Cooling Water Line
- Chiler Water Line
- Low/Medium/High Pressure Steam Line
- Vessel Insulation
- Heat Insulation & Tracing Line
- Insulation Line

LINE DESCRIPTION

XX-XXX-XXXX-XXX-XXX-XXXX

- Thickness Insulation (mm)
- Insulation Type
- Corrosion Allowance
- Presure Rating
- Material
- Line Number
- Service / Media Code
- Line Size (DN)

PIPING SPECIFICATION

Material

C : Carbon Steel A53/A106 B

D : Duplex SS

R : Stainless Steel 316/316L

S : Stainless Steel 304/304L

G : CS A53/A106 B Galvanized

P : PVC SCH80

H : HDPE

Pressure Rating

1 - ANSI Class 150

2 - ANSI Class 300

3 - ANSI Class 600

12 - DIN PN 16

13 - DIN PN 25

14 - DIN PN 40

Corrosion Allowance

A - 0.0mm, ASME B31.3

B - 1.6mm, ASME B31.3

C - 3.2mm, ASME B31.3

Insulation Type

RW - Rock Wool

PU - Poliurethane

ST - Steam Tracing

EQUIPMENT SYMBOLS

- Centrifugal Pump
- Gear Pump
- Diafragma Pump
- Vertical Pump
- Vacumm Pump
- Screw Pump
- Reciprocating Pump
- Plate Heat Exchanger
- Spiral Heat Exchanger
- Shell & Tube Heat Exchanger
- Air Compressor
- Ejector

GENERAL INSTRUMENT SYMBOLS

LOCATION/ACCESSIBILITY	DISCRETE INSTRUMENT	SHARED DISPLAY & CONTROL (DCS)	PLC
Field Mounted : 1. Field or locally mounted 2. Accessible to an operator at device			
Primary Location Normally Accessible to an Operator 1. Central or main control room 2. Front or main panel or console mounted 3. Visible on video display 4. Accessible to an operator at device or console			
Primary Location Normally Inaccessible to an Operator 1. Central or main control room 2. Rear of panel or cabinet mounted 3. Not visible on video display 4. Not normally accessible to an Operator at device or console			

MEDIA CODE

HCL	: Hydrocloric Acid
PA	: Phosphoric Acid
CAC	: Activated Carbon
LC	: Sodium Hydroxide
SM	: Sodium Methilate
N2	: Nitrogen
TOH	: Thermal Oil
LPC	: Low Pressure Condensate
MPC	: Medium Pressure Condensate
HPC	: High Pressure Condensate
HPS	: High Pressure Steam
MPS	: Medium Pressure Steam
LPS	: Low Pressure Steam
NG	: Natural Gas
IA	: Instrument Air
CA	: Compressed Air / Utility Air
V	: Vacuum
W	: City / Process Water
BFW	: Boiler Feed Water
CW	: Cooling Water
COL	: Crude Alcohol
TW	: Tempered Cooling Water
DW	: Demineralized Water
RO	: Reverse Osmosis Water
WW	: Waste Water
CPO	: Crude Palm Oil
PFAD	: Fatty Acid Destilate Oil
RPO	: Refined Palm Oil
ROL	: Refined Olein
RPS	: Refined Palm Stearin
PME	: Palm Methyl Esther
DSL	: Diesel Oil
FW	: Filtered Water
UF	: Ultrafiltration Water
RC	: RO Concentrate Water
CIP	: Membrane Cleaning Chemical
PAC	: Polyaluminium Chloride
SH	: Sodium Hypochlorite

LEGEND

REV	DATE	REMARKS

OWNER :

CLIENT :

WILMAR MNA SERANG

LOCATION :

SERANG, INDONESIA

PROJECT NAME :

2X200M3/HR AMF, ACP & 2X135M3/HR UF & 2X100M3/HR RO SYSTEM

DRAWING TITLE :

SYMBOL & LEGEND OF P&ID

CONTRACTOR :

DYNALON ENGINEERING SDN BHD
NO 5, JALAN P2/19A,BANDAR TEKNOLOGI KAJANG,
43500 SEMENYIH SELANGOR , MALAYSIA .
TEL : +603-87236991 / 7991 FAX : +603-87248991

THIS DRAWING IS THE PROPERTY OF DYNALON ENGINEERING SDN BHD. THE INFORMATION CONTAINED HEREIN SHALL NOT BE USED OR COPIED IN ANY MANNER WITHOUT THE WRITTEN PERMISSION OF DYNALON ENGINEERING SDN BHD.

DESIGNED BY	CH SHO	APPROVED BY		
DRAWN BY	JUNE	SCALE	NTS	
DATE	19.07.2018	DRAWING NO.	MNA/181151-20	REV-01