Simulation of stresses in Sunlit Sea prototype floater

Hallvard G. Fjær, Gulshan Noorsumar

10.04.2026

CAD files to FEM mesh

- CAD file on STEP format was received from Sunlit Sea
- Some geometrical details (screw holes in aluminium) were removed in a CAD tool before files were imported to MSC PATRAN
- Some details were left out whereas the solids important to the mechanical performance were prepared for meshing, and different parts were meshed by TE10 and HEX20 elements

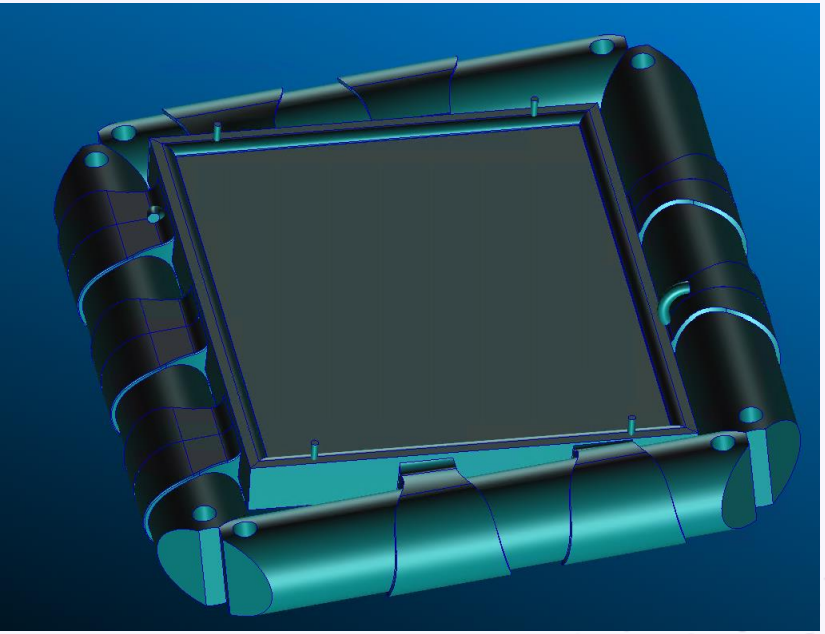

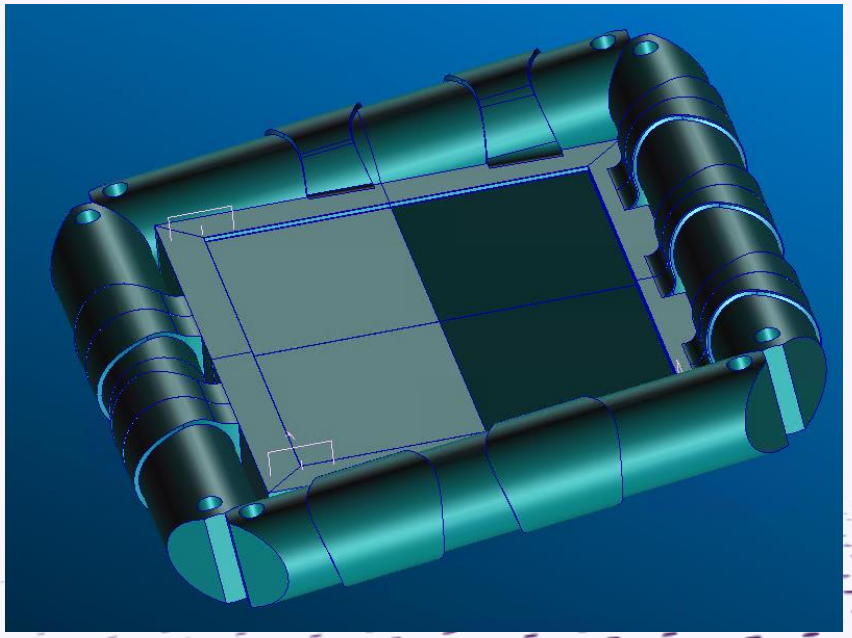

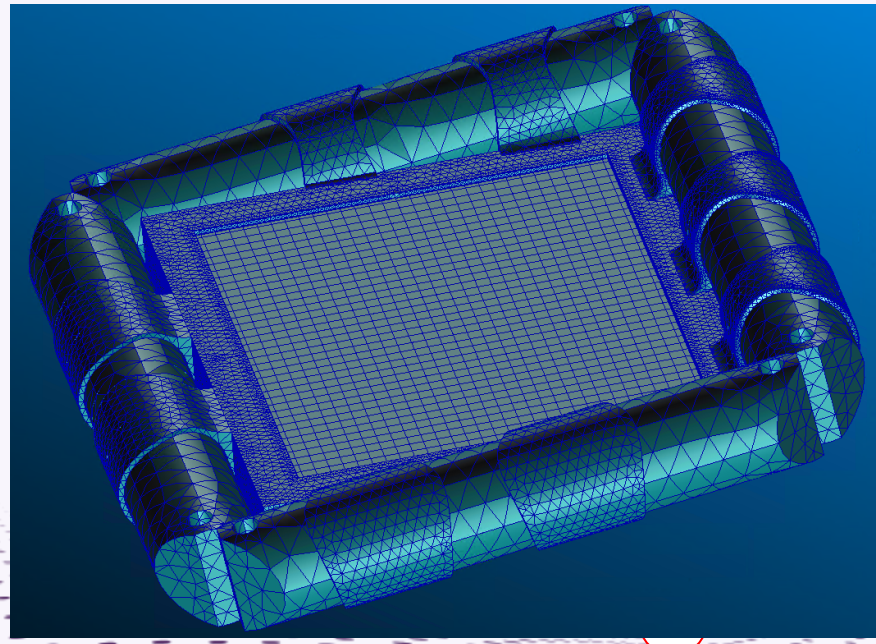

Different domains

- Different domains are given different material properties
- Mechanical interactions between parts are defined by interface boundary conditions

Polyurethane parts

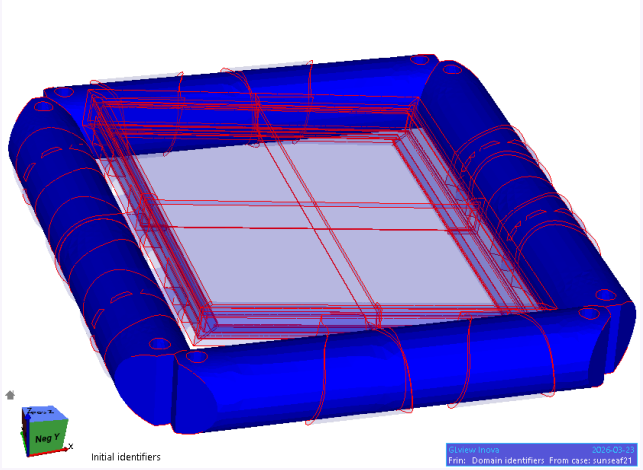

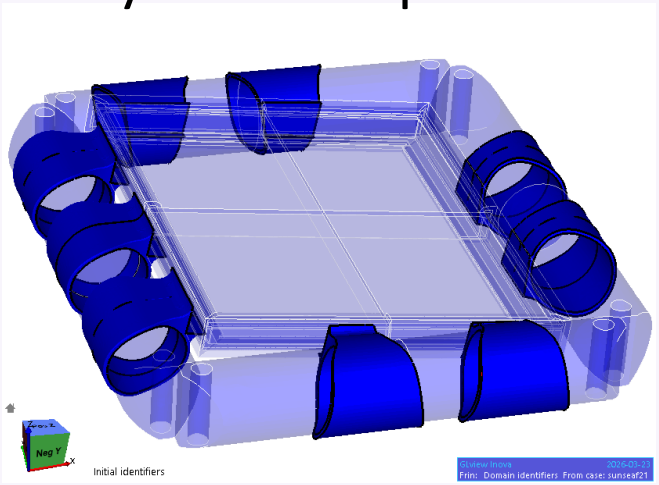

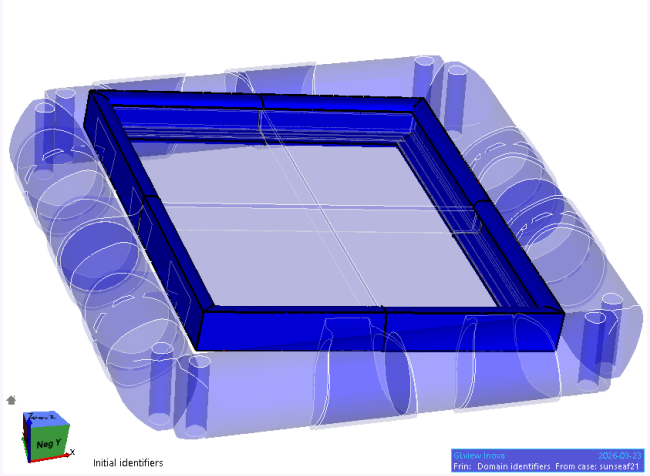

Glass

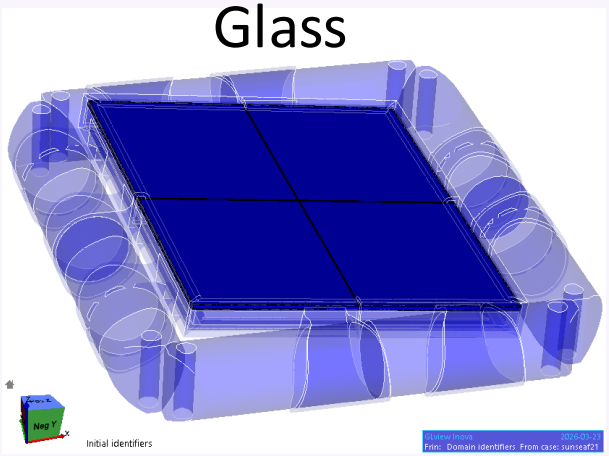

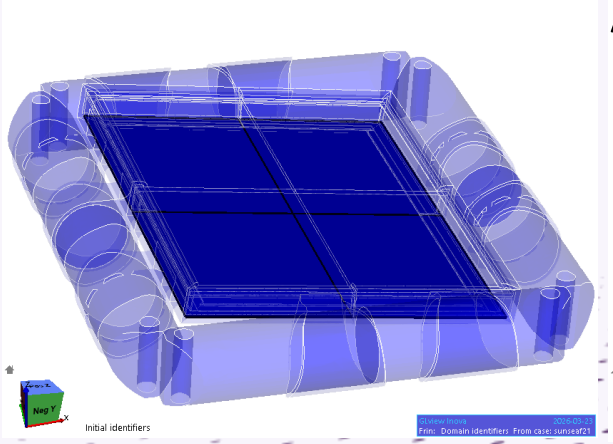

Aluminium parts

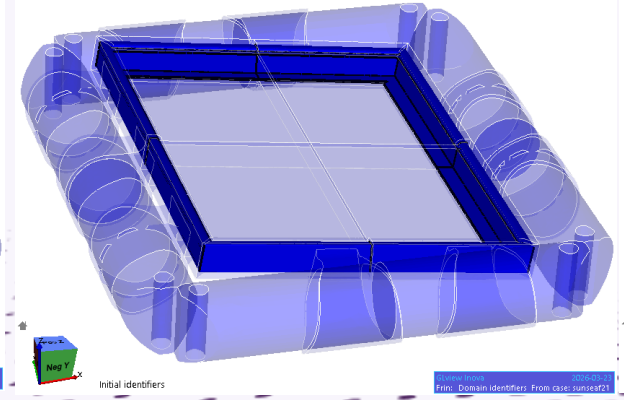

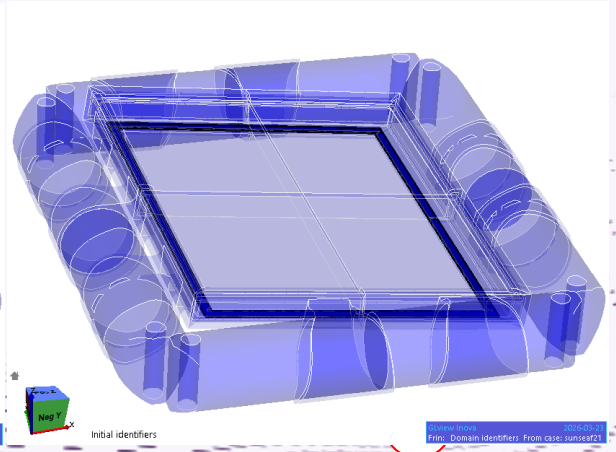

Rearrangement or expansion of floater components

- With SiSim it is possible to move and copy the different domains.
- To investigate the stresses around a floater rod/hinge, both computing on halves of floaters (left figure) and copy-and-paste of floater components (right figure) have been tested. Our experience so far is that it is easier to impose reasonable boundary conditions with the latter alternative.
- By adding more copy operations on the input file, it is possible to add a large number of floaters to the solution domain, but that will lead to longer computation times.
- With the current prototypes, addressing two connected floating modules is believed to the best choice. With full sized modules it could be relevant to include a larger number of modules to investigate relevant effects on a larger scale.
- With the solution domain shown to the right below having 310000 elements and ca 2000000 degrees of freedom, one linear analysis step takes about 2.5 minutes.

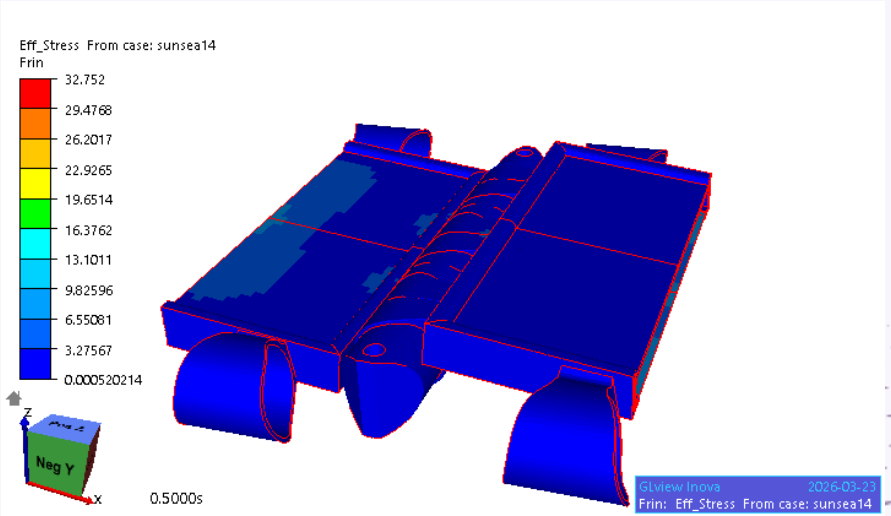

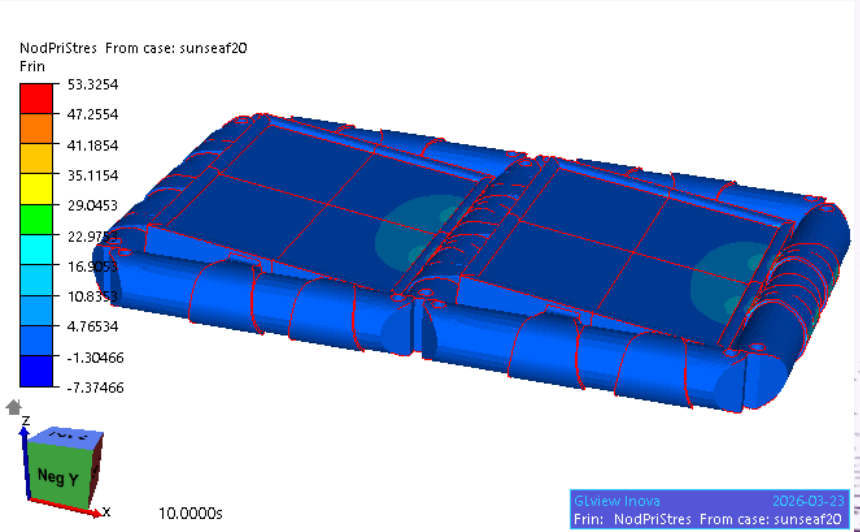

External forces and buoyancy

- It is possible to define constraints/given displacements or distributed forces (pressure) on the outer boundary.
- To have a controlled deformation of the floater it has been found best to impose the displacement (zero or evolving) on selected parts of the boundary. Residual forces are then calculated to give the required force to yield that given displacement.
- A boundary condition that specifies buoyancy forces from computed vertical position has been implemented. This can be used to identity how deep into the water floaters would sink, from their own weight and from added loads such as persons stepping on the floaters. The shown figure (water waves added only for illustration) indicates that the prototype floater will position itself rather deep into the water causing half of the bottom plates of the modules to have directly in contact with the water.

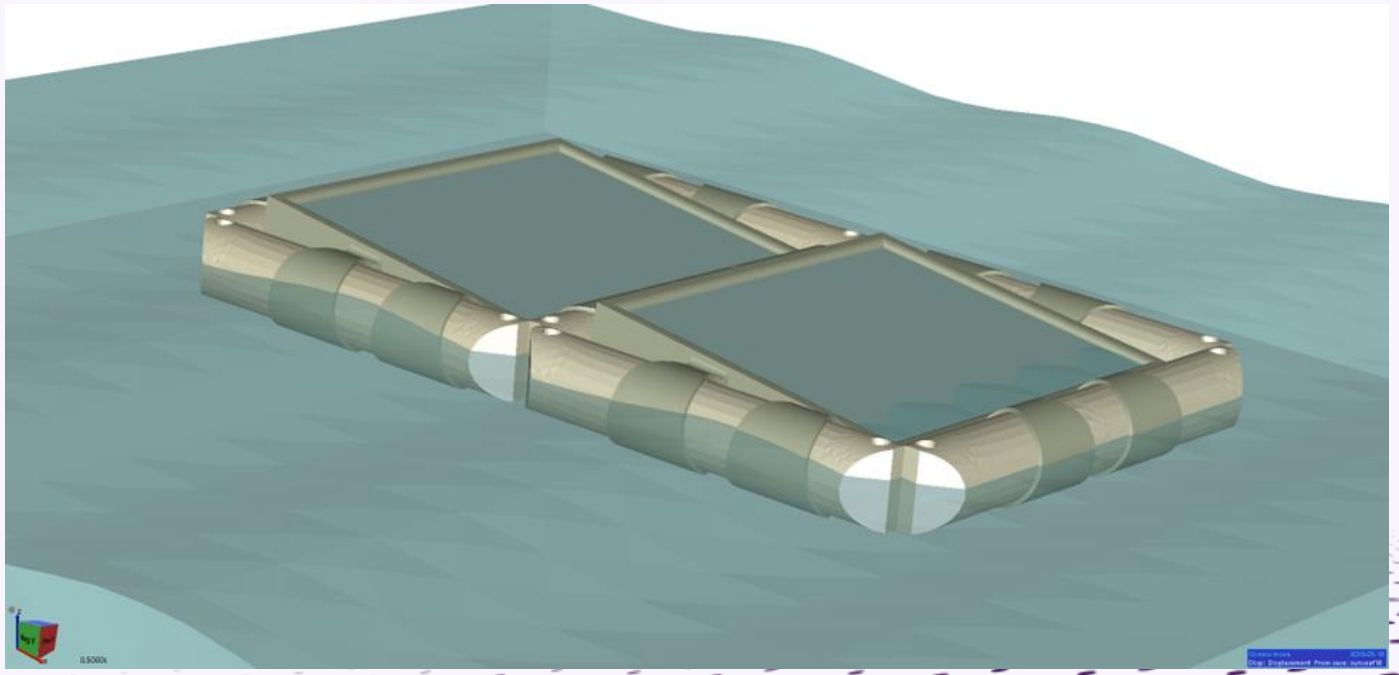

Buoyancy and inertial effects

- A simulation needs a few time steps (or iterations) on boundary conditions to converge. It must identify the part of the surface area that is covered by water to set the correct boundary conditions. (red curve)
- If inertial effects are added, the initially unbalanced buoyancy force will initiate an oscillation. The inertial effects and the wave motion in the water is not included, so one could expect these oscillations to go on without any dampening. However, *numerical* dissipation of kinetic energy is observed.
  The associated dampening of the oscillations is dependent on the size of the time step. With a time step of 0.025 sec (magenta curve and video), more than 10 periods can be identified. With longer time steps (0.05 sec: green curve and 0.1 sec: blue curve) the dampening is stronger.
- The shown period of the oscillations is believed to be strongly underestimated. If the hydrodynamic forces from water could be represented by an added mass, one might be able to replicate the dynamic forces reasonably well with our model.

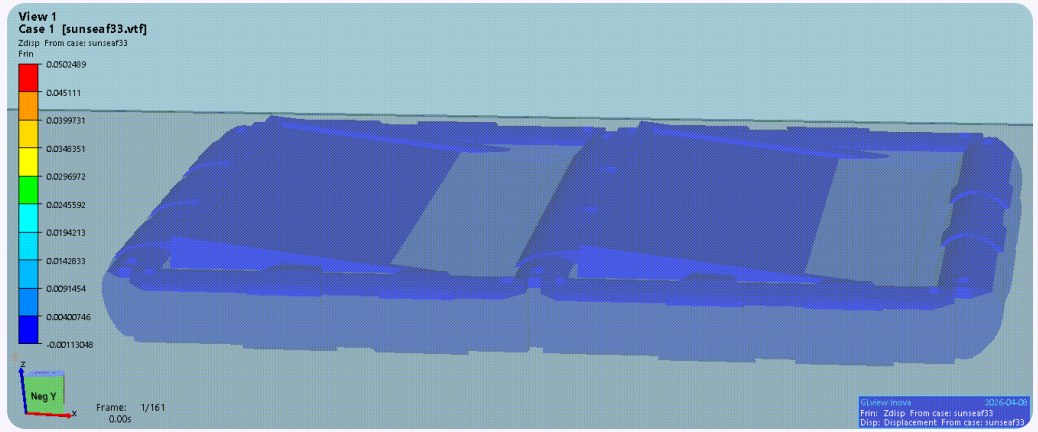

Vertical displacement of node in central hinge

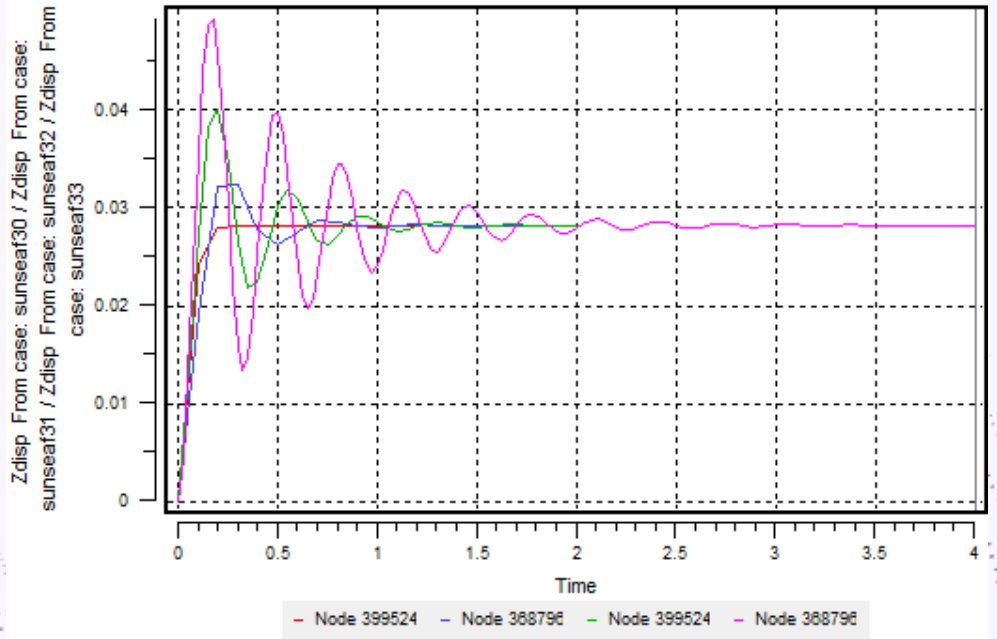

Response to horizontal forces or imposed horizontal elongation

Waves, currents and wind forces are expected to induce horizontal forces on an array of floaters. These external forces will in turn lead to interface forces between the different parts of the floater and internal stresses in the different domains

Results from simulations both with imposed x-displacements and localized x-forces are shown here.

The vertical displacements comes mainly from the balance of gravity and buoyancy forces, but they also turn out to be influenced by the torque from the horizontal forces, especially in the case of residual forces from the constraints defined by the defined displacements

Some small stiffness in the y-direction suppress spurious displacements in that direction

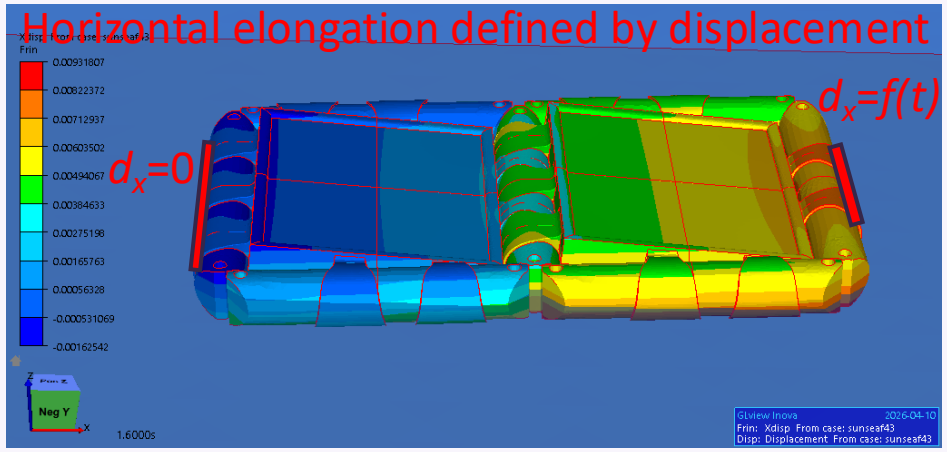

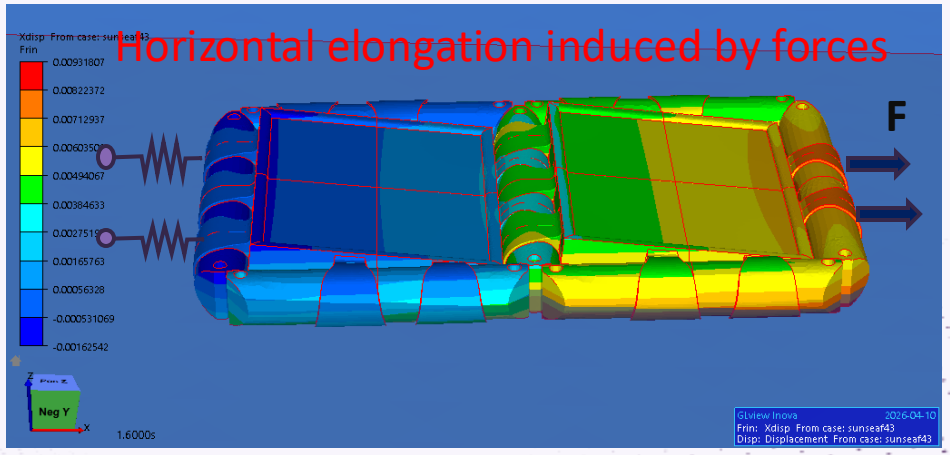

XX stresses from 10 mm imposed xx elongation

The largest xx stresses are seen in the thin aluminium bottom plate and in aluminium frame

This is assumed to be mainly due to the much smaller thickness of the aluminium plate than the glass.

A considerable difference is seen between the top and the bottom surface of both plates.

This indicates that there is some significant bending of these plates

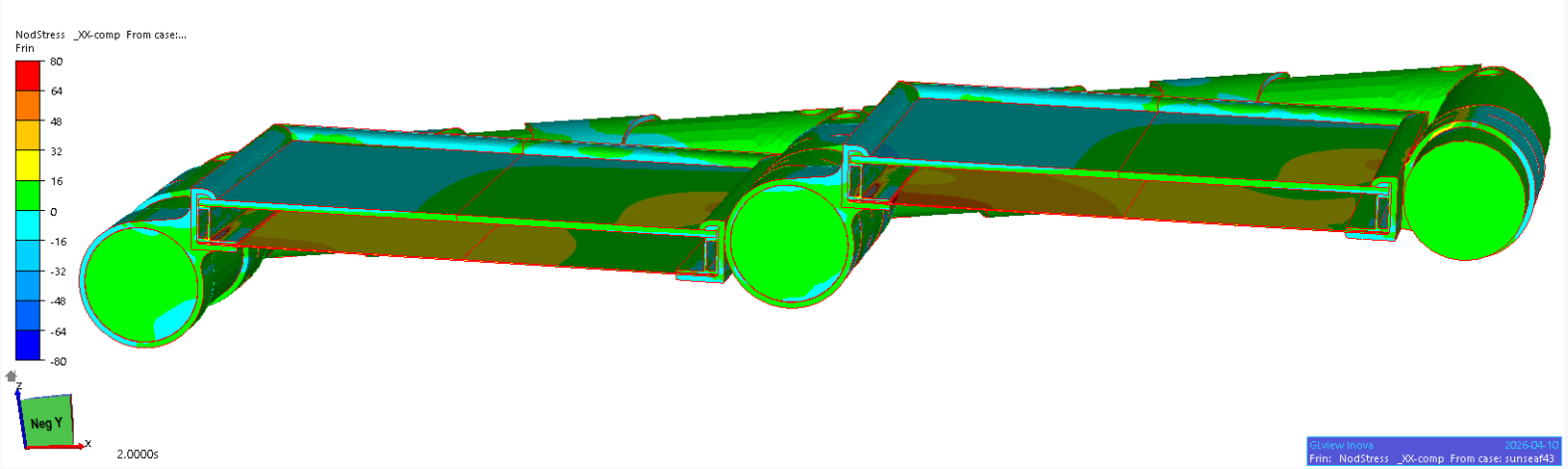

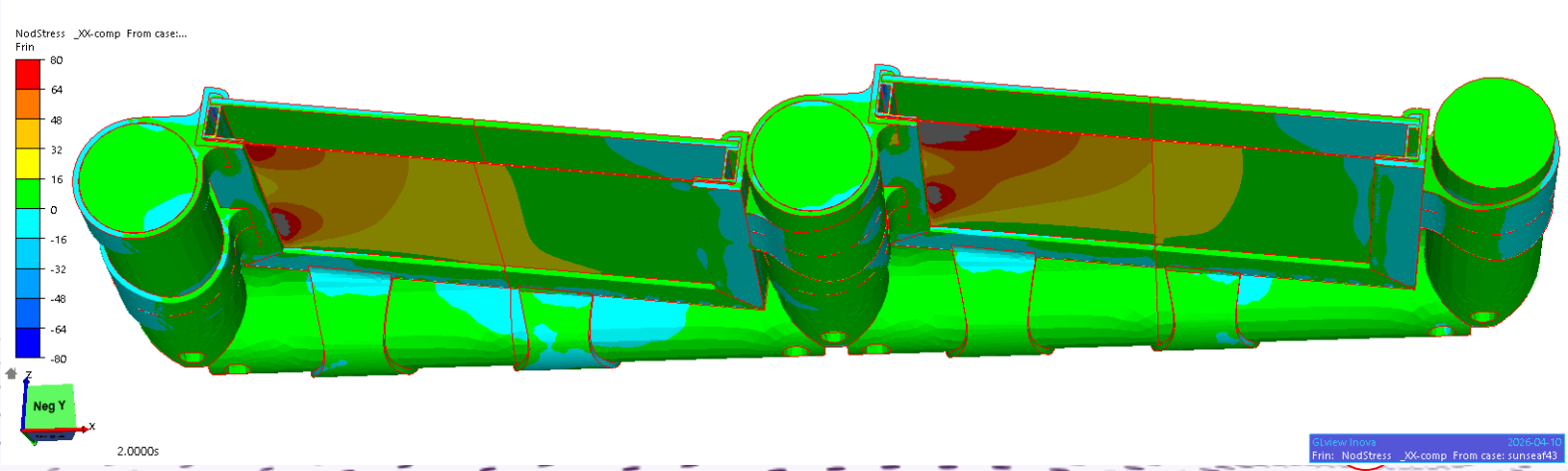

XX stresses and distortions magnified **x5**

A significant bending of the upper side of the aluminium frame is seen, leading to large stresses both in a flange of the frame and in the bottom plate

Showing the stress field in the different material and with their different range of stresses reveals that the stress in the aluminium is close to the yield stress level and that the largest stresses seen in the polyurethane is well above yield.

In the glass, the largest stresses are found at the upper surface near the attachment of the polyurethane ring. This maximum stress is also believed to depend on how the glass is attached to the aluminium frame

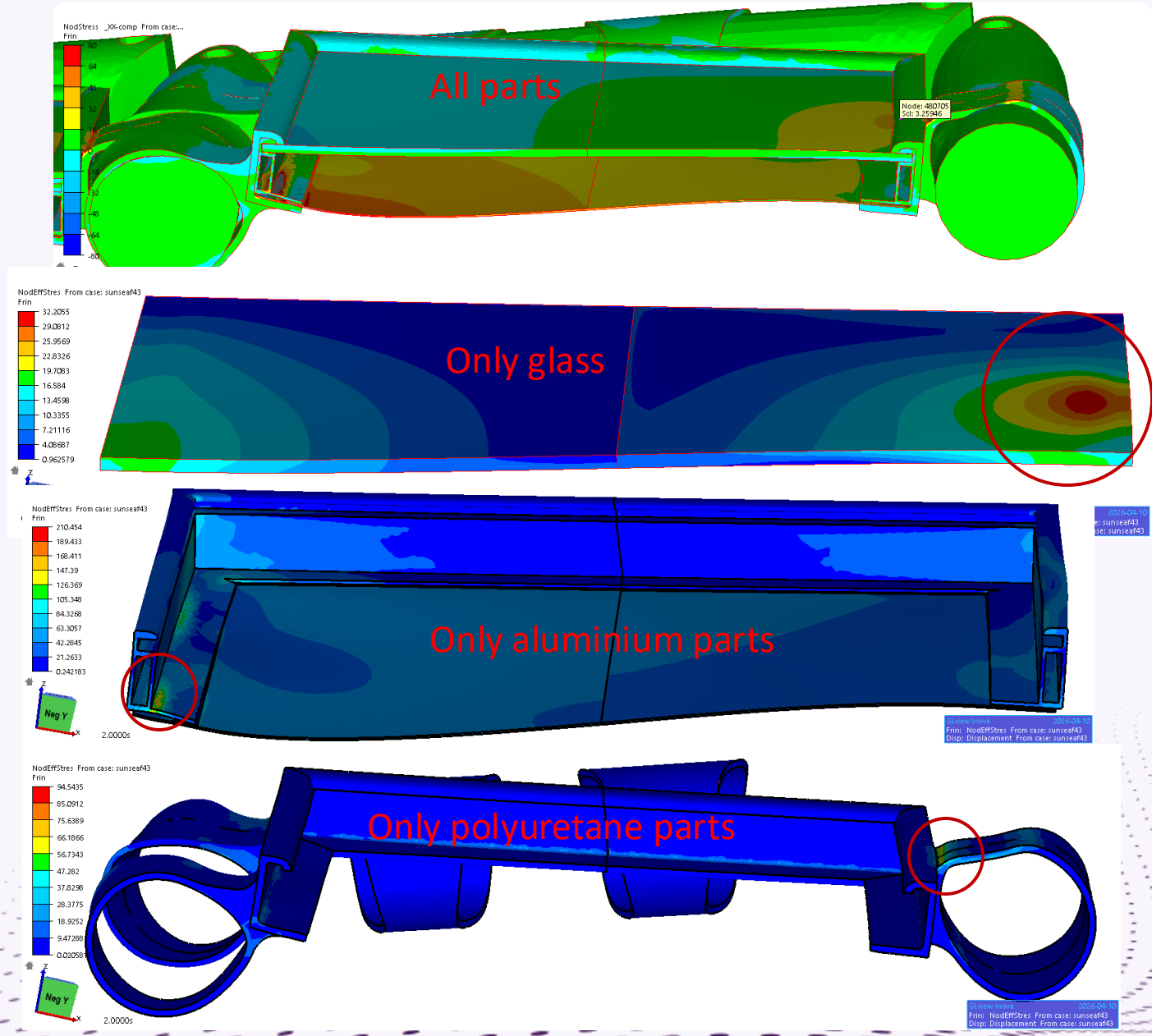

Glass attachment

The way (here) the glass (actually PV module sandwich) is attached to the aluminium frame could strongly influence the stresses in the glass and in the interface between the polyurethane and the glass.

If a rubber inlay is used, or if the glass is allowed to move rather freely in the slot of the aluminium frame, the stresses in the glass would be expected to become low, whereas the stresses at the glass/polyurethane interface could be significant. In the simulations, an interface stiffness of 100 MPa per mm displacement was applied

If the glass is glued to the aluminium, the forces between the aluminium and the glass would become larger, whereas the stresses at the glass/polyurethane interface (considered to be critical) could be significant.
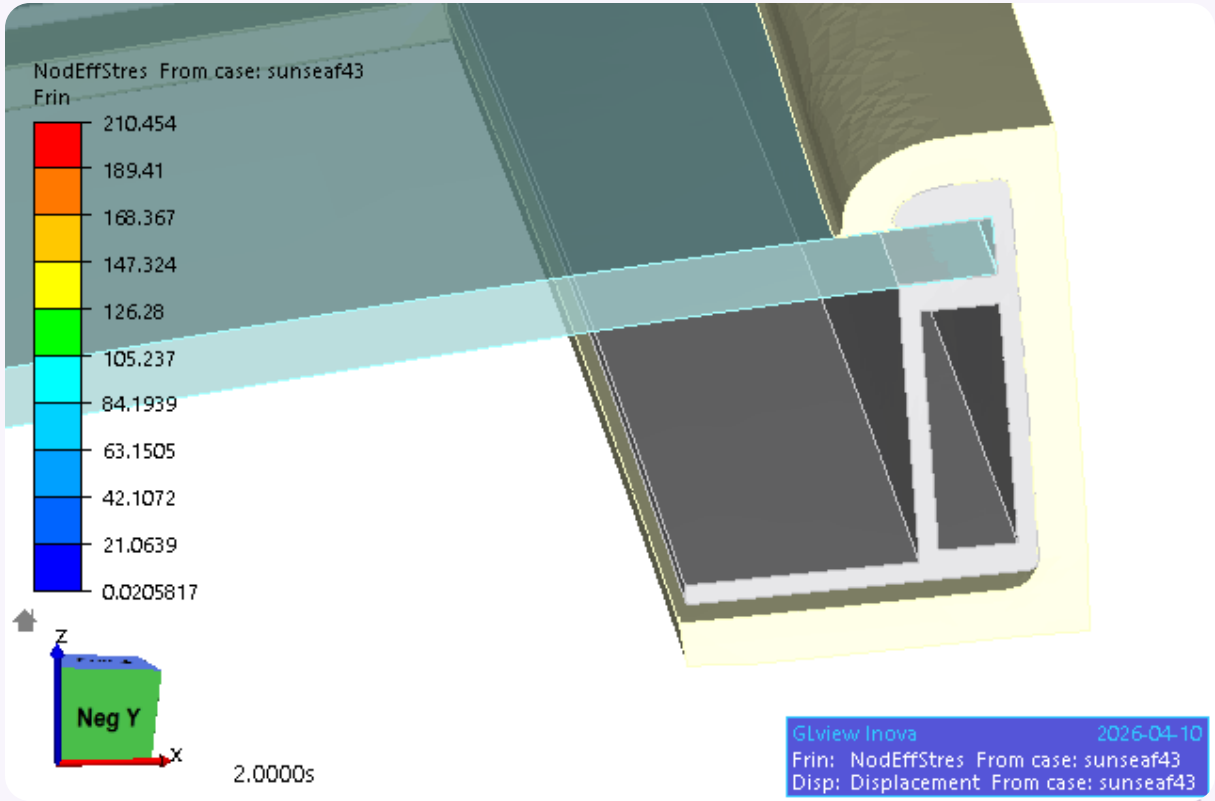
In the simulations an interface stiffness of 100 MPa per mm displacement was applied – considered as a rather stiff connection