E22-400M30S User Manual

SX1268 433/470MHz SPI SMD LoRa Module

Chengdu Ebyte Electronic Technology Co.,Ltd.

Contents

1. Overview 2
1.1 Introduction 3
1.2 Features 3
1.3 Application 4
2. Specification and parameter 4
2.1 Limit parameter 4
2.2 Operating parameter 4
3. Size and pin definition 5
4. Basic Operation 7
4.1 Hardware Design 7
4.2 Software Programming 8
5. FAQ 9
5.1 Communication range is too short 9
5.2 Module is easy to damage 9
5.3 High bit error rate 9
6. Welding operation guidance 10
6.1 Reflow Soldering Temperature 10
6.2 Reflow Soldering Curve 11
7. Related Model 11
8. Antenna Type 12
8.1 Antenna recommendation 12
9. Batch packaging 13
Revision history 14
About us 14

Copyright ©2012–2024, Chengdu Ebyte Electronic Technology Co.,Ltd.

Disclaimer

EBYTE reserves all rights to this document and the information contained herein. Products, names, logos and designs described herein may in whole or in part be subject to intellectual property rights. Reproduction, use, modification or disclosure to third parties of this document or any part thereof without the express permission of EBYTE is strictly prohibited.

The information contained herein is provided “as is” and EBYTE assumes no liability for the use of the information. No warranty, either express or implied, is given, including but not limited, with respect to the accuracy, correctness, reliability and fitness for a particular purpose of the information. This document may be revised by EBYTE at any time. For most recent documents, visit www.ebyte.com.

Copyright ©2012–2024, Chengdu Ebyte Electronic Technology Co.,Ltd.

1. Overview

1.1 Introduction

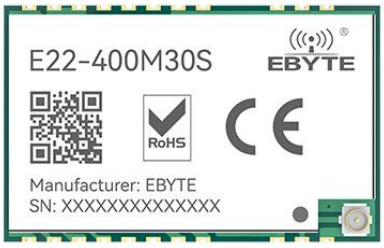

The E22-400M30S is based on the SX1268, a new generation of LoRa™ RF chip manufactured by Semtech, USA. It is an ultra-small and self-developed 433MHz, 470MHz SMD LoRa™ wireless module.

Because it adopted the original SX1268 as main core, the PA and LNA is built-in also based on the previous one, which makes the maximum transmission power to 1W, at the same time, the receive sensitivity is also further improved. The overall communication stability is greatly improved compared to the products without power amplifiers and low noise amplifiers. The anti-interference performance and communication distance have been further improved compared to the previous generation LoRa™ transceiver, and far superior to the current FSK and GFSK modulation products. Adopted industrial grade high precision 32MHz crystal, the product can cover an ultra-wide frequency range of 410~493MHz and is backward compatible with SX1278 and SX1276.

Since the module is a RF transceiver module only, users need to use the MCU driver or use a dedicated SPI debug tool.

1.2 Features

- Communication distance tested is up to 12km;
- Maximum transmission power of 1W, software multi-level adjustable;
- Support the global license-free ISM 433MHz/470MHz band;
- Support air date rate of 0.018-62.5kbps in the LoRa™ mode;
- Support 300kpbs in the FSK mode;
- Compatible with the transceiver of SX1278/SX1276;
- With large capacity, FIFO supports 256Byte data cache.;
- New SF5 spreading factor to support dense networks;
- Support 2.5V~5.5V power supply, more than 5.0V power supply can guarantee the best performance;
- Industrial grade standard design, support -40 ~ 85 °C for working over a long time;
- IPEX and stamp hole are optional, which is convenient for secondary development and integration.

Copyright ©2012–2024, Chengdu Ebyte Electronic Technology Co.,Ltd.

1.3 Application

- Home security alarm and remote keyless entry;
- Smart home and industrial sensors;
- Wireless alarm security system;
- Building automation solutions;
- Wireless industrial-grade remote control;
- Health care products;
- Advanced Meter Reading Architecture(AMI);
- Automotive industry applications.

2. Specification and parameter

2.1 Limit parameter

Main parameter	Performance		Remark
	Min.	Max.	
Power supply（V）	0	5.5	Voltage over 5.5V will cause permanent damage to module
Blocking power（dBm）	-	10	Chances of burn is slim when modules are used in short distance
Operating temperature（℃）	-40	85	

2.2 Operating parameter

Main parameter		Performance			Remark
		Min.	Typ.	Max.	
Operating voltage（V）		2.5	5.0	5.5	It’s recommended to use 5V.
Communication level（V）			3.3		For 5V TTL, It is recommended to add level conversion.
Operating temperature（℃）		-40	-	85	Industrial design
Operating frequency（GHz）		410	433/470/490	493	Support ISM band
Power consumption	TX current（mA）		650		Instant power consumption
	RX current（mA）		14		
	Sleep current（μA）		3		Software is shut down
Max Tx power（dBm）		29.5	30.0	31	
Receiving sensitivity（dBm）		-149	-150	-151	Air data rate is 0.3kbps
Air data rate（bps）		0.6k	-	300k	Controlled via user’s programming
		0.018k		62.5k	Controlled via user’s programming

Copyright ©2012–2024, Chengdu Ebyte Electronic Technology Co.,Ltd.

Main parameter	Description	Remark
Distance for reference	12000m	Test condition: clear and open area, antenna gain: 5dBi, antenna height: 2.5m, air data rate: 0.3kbps
FIFO	256Byte	Maximum length of single transmission
Crystal frequency	32MHz	
Modulation	LoRa(recommended)	
Package	SMD	
Connector	2.54mm	Stamp hole
Communication interface	SPI	0-10Mbps
Size	38.5* 24*3.6 mm	
Antenna	IPEX/IPEX	50 ohm impedance

3. Size and pin definition

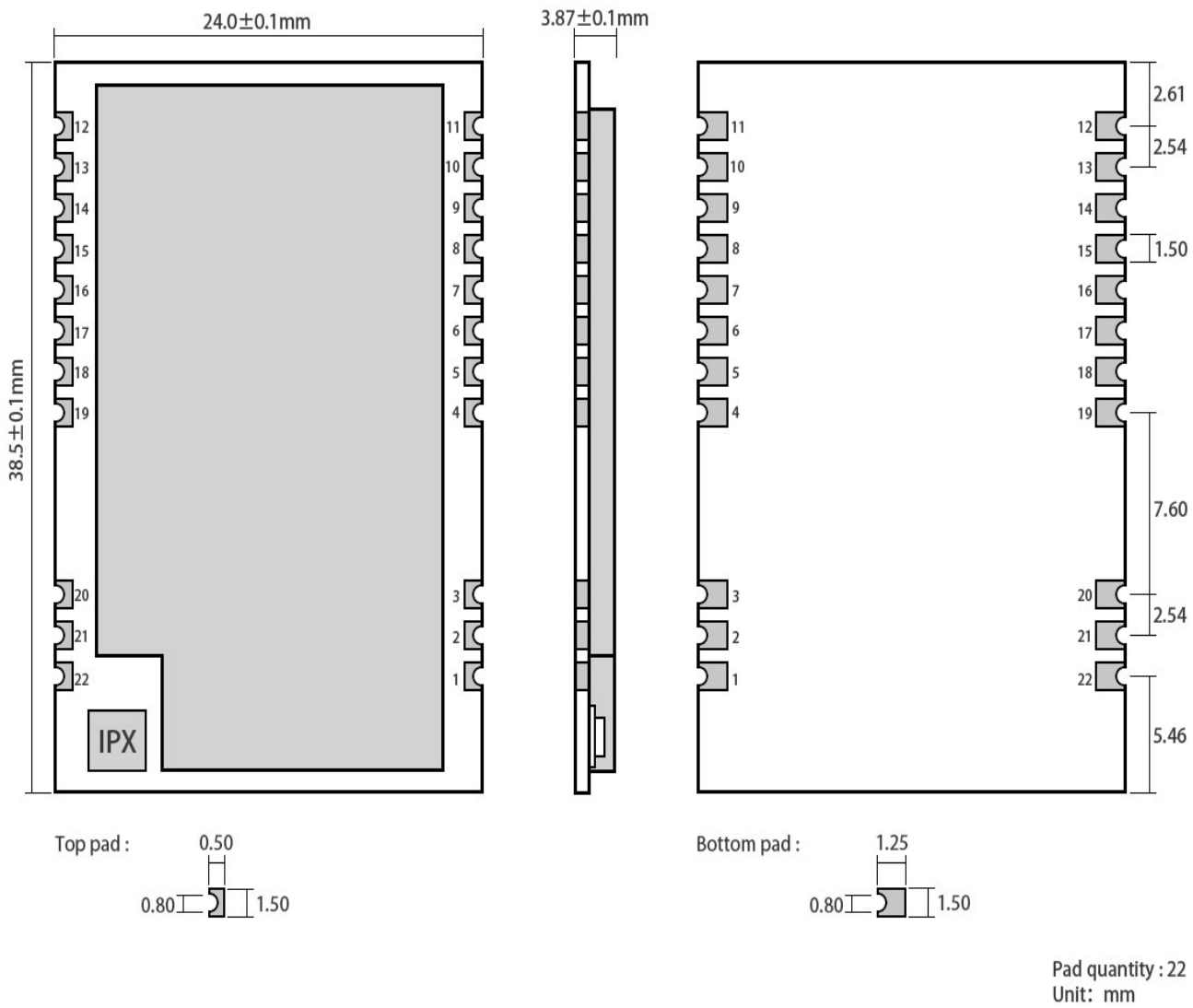

Copyright ©2012–2024, Chengdu Ebyte Electronic Technology Co.,Ltd.

No.	Name	Direction	Function
1	GND		Ground wire, connected to the power reference ground
2	GND		Ground wire, connected to the power reference ground
3	GND		Ground wire, connected to the power reference ground
4	GND		Ground wire, connected to the power reference ground
5	GND		Ground wire, connected to the power reference ground
6	RXEN	Input	RF switch receiving control pin, connected to external microcontroller IO, For logic control, please refer to Table 1 below. For control routines, please refer to the demos on the EBYTE official website.
7	TXEN	Input	RF switch transmitting control pin, connected to external microcontroller IO or DIO2, For logic control, please refer to Table 1 below. For control routines, please refer to the demos on the EBYTE official website.
8	DIO2	Input/Output	Configurable universal IO port (see SX1262 manual for details)
9	VCC		Power supply, 2.5~5.5V(It is recommended to add external ceramic filter capacitor)
10	VCC		Power supply, 2.5~5.5V(It is recommended to add external ceramic filter capacitor)
11	GND		Ground wire, connected to the power reference ground
12	GND		Ground wire, connected to the power reference ground
13	DIO1	Input/Output	Configurable universal IO port (see SX1262 manual for details)
14	BUSY	Output	For status indication (see SX1262 manual for details)
15	NRST	Input	Chip reset trigger input pin, valid in low level
16	MISO	Output	SPI data output pin
17	MOSI	Input	SPI data output pin
18	SCK	Input	SPI data output pin
19	NSS	Input	Module chip select pin for starting an SPI communication
20	GND		Ground wire, connected to the power reference ground
21	ANT		Antenna interface, stamp hole (50 ohm characteristic impedance)
22	GND		Ground wire, connected to the power reference ground

Copyright ©2012–2024, Chengdu Ebyte Electronic Technology Co.,Ltd.

4. Basic Operation

4.1 Hardware Design

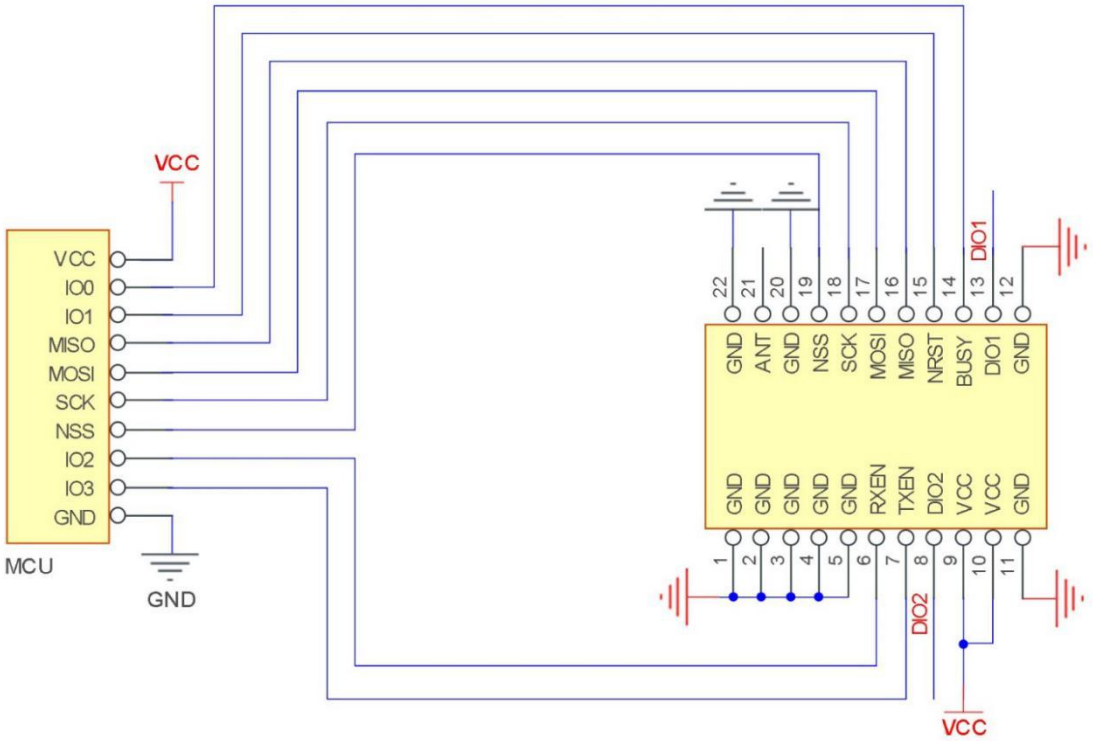

SN	Brief Connection between Module and Single Chip Microcomputer
1	The IO0、IO1、IO2、IO3 in MCU means the IO port of MCU.
2	DIO1、DIO2 is the normal IO port, which can be configured to multiple function. The DIO2 can connect with TXEN， but not with the IO port of MCU. It's used to control RF switch, see more details in SX1262 datasheet. Also It can be floated when not in use.
3	The DIO3 is powered by a 32MHz TCXO crystal.
4	Ensure the good grounding, large area of paving, small the power supply ripple, the filter capacitor should be increased and as close as possible to the VCC and GND pins of module.
5	It is recommended to add 200R protection resistor to RXD/TXD of external MCU.

Note:

- It is recommended to use DC stabilized power supply to supply power to the module. The power supply ripple coefficient is as small as possible, and the module needs to be reliably grounded.
- Please pay attention to the correct connection of the positive and negative poles of the power supply. If the reverse connection is connected, the module may be permanently damaged.
- Please check the power supply to ensure that between the recommended supply voltage, if exceeding the maximum, the module will be permanently damaged.
- Please check the stability of the power supply, the voltage can not be significantly frequent.
- When designing the power supply circuit for the module, it is often recommended to reserve more than 30% of the

Copyright ©2012–2024, Chengdu Ebyte Electronic Technology Co.,Ltd.

margin, and the whole machine is beneficial for long-term stable operation.

- The module should be as far away as possible from the power supply, transformers, high-frequency wiring and other parts with large electromagnetic interference.
- High-frequency digital traces, high-frequency analog traces, and power traces must be avoided under the module. If it is necessary to pass through the module, assume that the module is soldered to the Top Layer, and the copper is spread on the Top Layer of the module contact part(All copper-covered and well grounded), and must be close to the digital part of the module and routed in the Bottom Layer.
- Assuming the module is soldered or placed in the Top Layer, it is also wrong to randomly route the Bottom Layer or other layers, which will affect the module's spurs and receiving sensitivity to varying degrees.
- Assume that there are traces with large electromagnetic interference around the module (high-frequency digital, high-frequency analog, power trace), which will greatly affect the performance of the module. It is recommended to stay away from the module according to the strength of the interference. If necessary, appropriate isolation and shielding can be done;
- If the communication line uses a 5V level, a 1k-5.1k resistor must be connected in series (not recommended, there is still a risk of damage).
- Try to stay away from some physical layers and also have a 2.4GHz TTL protocol, for example: USB3.0
- The antenna mounting structure has a great influence on the performance of the module. It is necessary to ensure that the antenna is exposed, preferably vertically upward. When the module is mounted inside the case, use a good antenna extension cable to extend the antenna to the outside of the case.
- The antenna must not be installed inside the metal case, which will greatly reduce the transmission distance.
- It is recommended to add a 200R protection resistor to the RXD/TXD of the external MCU.

4.2 Software Programming

- This module is SX1268/SX1262+PA+LNA. Its driving mode is exactly the same as SX1268/SX1262. Users can operate according to SX1268/SX1262 chip datasheet.
- DIO1 and DIO2 are general-purpose IO ports, which can be configured into multiple functions. DIO2 can be connected to TXEN and not connected to the MCU's IO port. It can be used to control the RF switch transmission. If not used, you can hang it. For details, see the SX1262 manual.
- Internal DIO3 Power FOR 32MHZ TCXO CRYSTAL (DIO3 CONFIGURABLE OUTPUT 2.2V).

Table 1 [Transceiver state control truth table]

Radio State Pin	RXEN (Input)	TXEN (Input)	Remark
Transmit	0	1	“0”: low level “1”: high level * RXEN, TXEN cannot be at the same time as “1”. * When switching to the transmit state, please delay at least 2ms before transmitting the data.
Receive	1	0	
Low power consumption	0	0	

Table 2 [The RF output power control table]

Set the power dBm (SX1268 Front-stage output)	Real power dBm (Module actual output)	Remark
18	29.96	* Test frequency was 433 MHz.

Copyright ©2012–2024, Chengdu Ebyte Electronic Technology Co.,Ltd.

14	27.25	* There are deviation in the actual power of each module, and this table value is used as a reference only. * The set power of this table will only take some typical values.
10	24.02	
7	21.11	
4	18.08	
1	15.02	
-2	12.29	
-5	9.77	

5. FAQ

5.1 Communication range is too short

- The communication distance will be affected when obstacle exists.
- Data lose rate will be affected by temperature, humidity and co-channel interference.
- The ground will absorb and reflect wireless radio wave, so the performance will be poor when testing near ground.
- Sea water has great ability in absorbing wireless radio wave, so performance will be poor when testing near the sea.
- The signal will be affected when the antenna is near metal object or put in a metal case.
- Power register was set incorrectly, air data rate is set as too high (the higher the air data rate, the shorter the distance).
- When the power supply at room temperature is lower than the recommended low voltage, the lower the voltage is, the lower the transmitting power is.
- Due to antenna quality or poor matching between antenna and module.

5.2 Module is easy to damage

- Please check the power supply and ensure it is within the recommended range. Voltage higher than the peak will lead to a permanent damage to the module.
- Please check the stability of power supply and ensure the voltage not to fluctuate too much.
- Please make sure anti-static measures are taken when installing and using, high frequency devices have electrostatic susceptibility.
- Please ensure the humidity is within limited range for some parts are sensitive to humidity.
- Please avoid using modules under too high or too low temperature.

5.3 High bit error rate

- There are co-channel signal interference nearby, keep away from interference sources or modify frequency, channel to avoid interference.
- The clock waveform on the SPI is not standard. Check whether there is interference on the SPI line. The SPI bus line should not be too long.
- Unsatisfactory power supply may also cause garbled characters, and ensure the reliability of the power supply.
- If the extension cable or feeder is of poor quality or too long, the bit error rate will be high.

Copyright ©2012–2024, Chengdu Ebyte Electronic Technology Co.,Ltd.

6. Welding operation guidance

6.1 Reflow Soldering Temperature

Profile Feature	Curve feature	Sn-Pb Assembly	Pb-Free Assembly
Solder Paste	Solder paste	Sn63/Pb37	Sn96.5/Ag3/Cu0.5
Preheat Temperature min （Tsmin）	Minimum preheating temperature	100℃	150℃
Preheat temperature max (Tsmax)	Maximum preheating temperature	150℃	200℃
Preheat Time (Tsmin to Tsmax)(ts)	Preheating time	60-120 sec	60-120 sec
Average ramp-up rate(Tsmax to Tp)	Average rising rate	3℃/second max	3℃/second max
Liquidous Temperature (TL)	Liquid phase temperature	183℃	217℃
Time（tL）Maintained Above（TL）	Time above liquidus	60-90 sec	30-90 sec
Peak temperature（Tp）	Peak temperature	220-235℃	230-250℃
Aveage ramp-down rate（Tp to Tsmax）	Average descent rate	6℃/second max	6℃/second max
Time 25℃ to peak temperature	Time of 25 ° C to peak temperature	6 minutes max	8 minutes max

Copyright ©2012–2024, Chengdu Ebyte Electronic Technology Co.,Ltd.

6.2 Reflow Soldering Curve

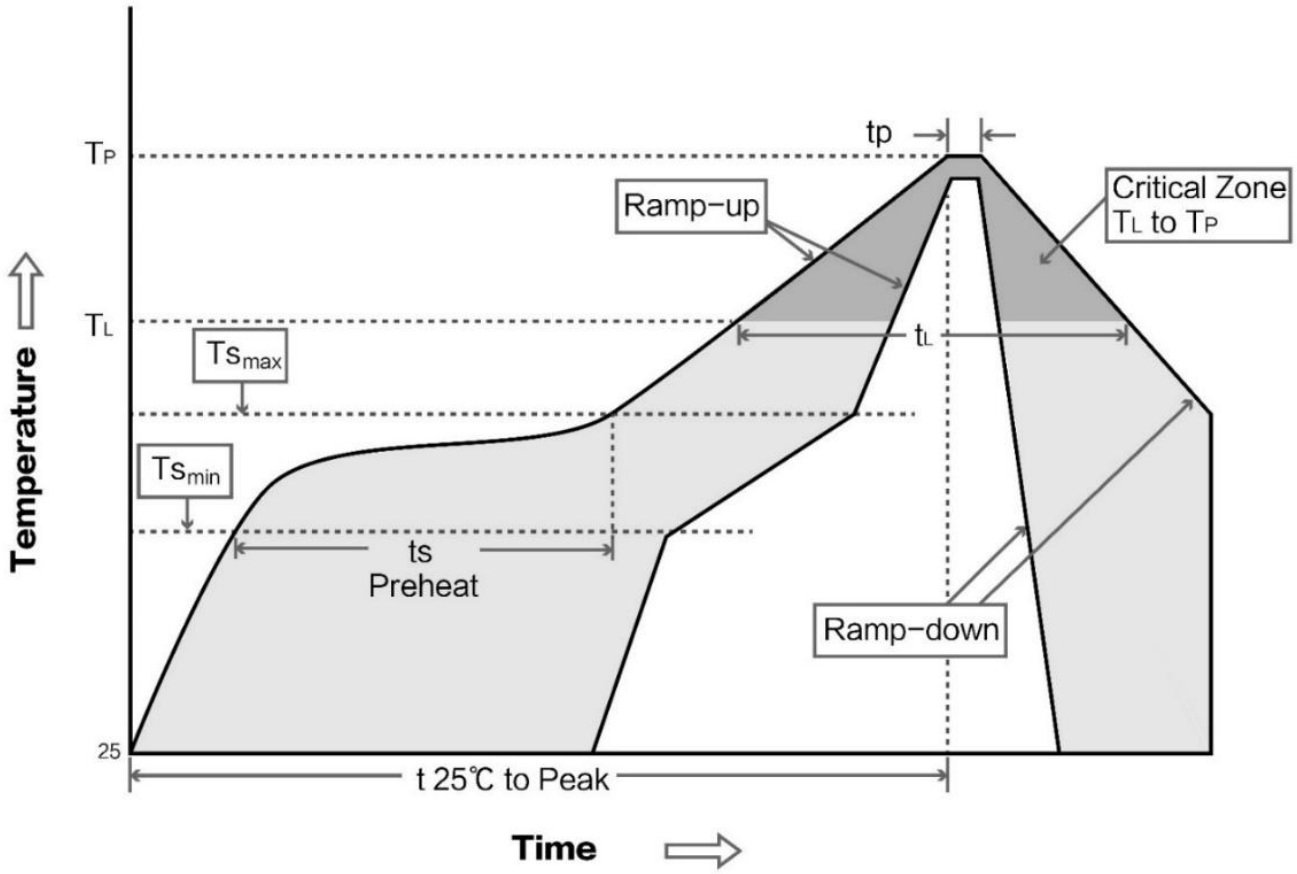

7. Related Model

Model	Chip	Frequency Hz	Transmit power dBm	Test distance km	Packaging	Size mm	Communication Interface
E22-900T22S	SX1262	868M 915M	22	7	SMD	16*26	UART
E22-230T22S	SX1262	230M	22	7	SMD	16*26	UART
E22-400T22S	SX1268	433M 470M	22	7	SMD	16*26	UART
E22-400M30S	SX1268	433M 470M	30	12	SMD	24*38.5	SPI
E22-900M30S	SX1262	868M 915M	30	12	SMD	24*38.5	SPI
E22-900M22S	SX1262	868M 915M	22	6.5	SMD	14*20	SPI
E22-400M22S	SX1268	433M 470M	22	6.5	SMD	14*20	SPI

Copyright ©2012–2024, Chengdu Ebyte Electronic Technology Co.,Ltd.

8. Antenna Type

8.1 Antenna recommendation

The antenna plays an important role in the communication process. The inferior antenna often has a great impact on the communication system. Therefore, we recommend some antennas that support our wireless modules and have excellent performance and reasonable price.

Product	Type	Frequency Hz	Interface	Gain dBi	Size	Feeder	Features
TX433-NP-4310	Soft PCB antenna	433M	SMA-J	2	43.8*9.5mm	-	Built-in flexible FPC soft antenna
TX433-JW-5	Soft PCB antenna	433M	SMA-J	2	50mm	-	Flexible, Omnidirectional
TX433-JWG-7	Soft PCB antenna	433M	SMA-J	2.5	75mm	-	Flexible, Omnidirectional
TX433-JK-20	Soft PCB antenna	433M	SMA-J	3	210mm	-	Flexible, Omnidirectional
TX433-JK-11	Soft PCB antenna	433M	SMA-J	2.5	110mm	-	Flexible, Omnidirectional
TX433-XP-200	Sucker antenna	433M	SMA-J	4	19cm	200cm	High Gain
TX433-XP-100	Sucker antenna	433M	SMA-J	3.5	18.5cm	100cm	High Gain
TX433-XPH-300	Sucker antenna	433M	SMA-J	6	96.5cm	300cm	High Gain
TX433-JZG-6	Soft PCB antenna	433M	SMA-J	2.5	52mm	-	Ultra short straight, Omnidirectional
TX433-JZ-5	Soft PCB antenna	433M	SMA-J	2	52mm	-	Ultra short straight, Omnidirectional
TX490-XP-100	Sucker antenna	490M	SMA-J	50	12cm	100cm	High Gain
TX490-JZ-5	Soft PCB antenna	490M	SMA-J	50	50mm	-	High Gain

Copyright ©2012–2024, Chengdu Ebyte Electronic Technology Co.,Ltd.

9. Batch packaging

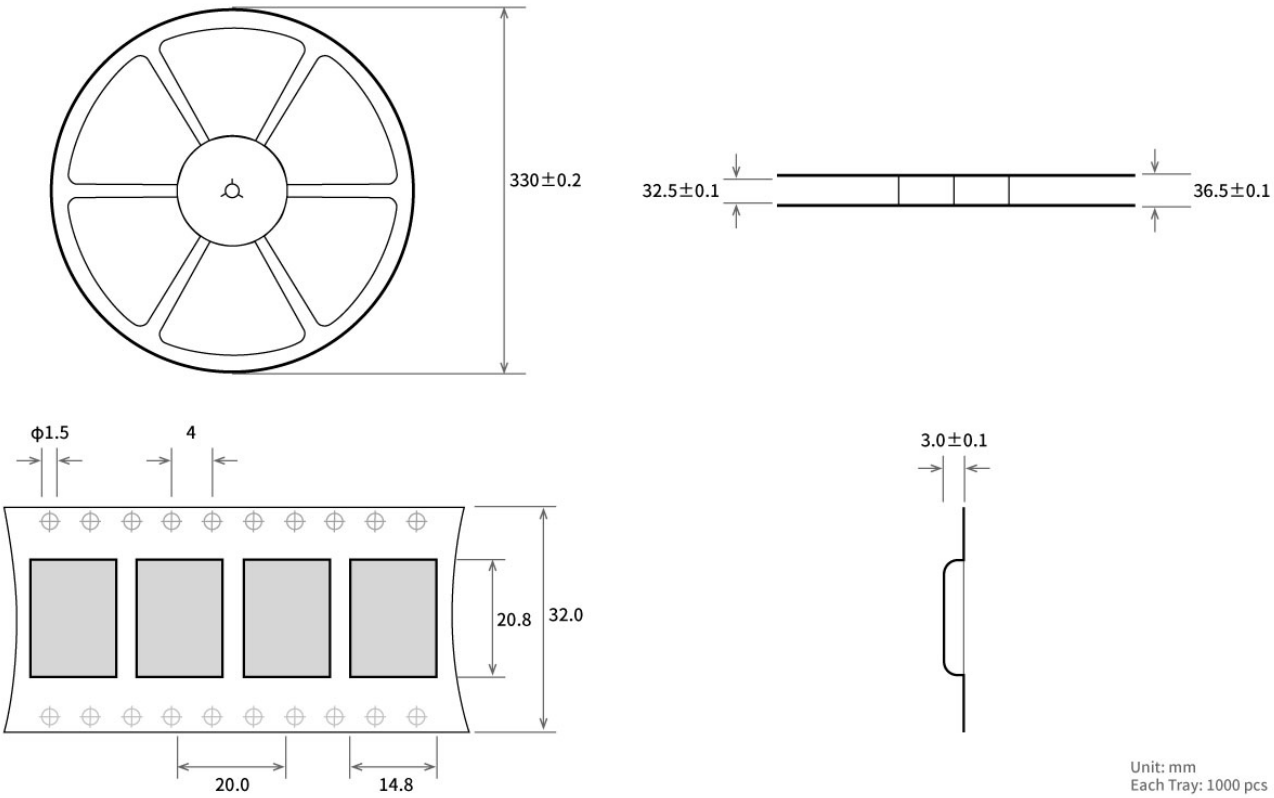

Copyright ©2012–2024, Chengdu Ebyte Electronic Technology Co.,Ltd.

Revision history

Version	Date	Description	Issued by
1.0	2018-9-18	Original version	huaa
1.1	2019-2-17	Content revised	Ray
1.2	2019-04-03	Content revised	Ray
1.3	2020-11-26	Error correction	Linson
1.4	2023-3-30	Error correction	Yan
1.6	2024-11-20	Add descriptions of radio frequency transceiver logic control and front-end power output.	Lei
1.7	2024-12-31	Delete the authentication description	Lei
1.8	2025-3-3	Change module picture	LAU

About us

Technical support: support@cdebyte.com
Documents and RF Setting download link:https://www.cdebyte.com
Thank you for using Ebyte products! Please contact us with any questions or suggestions: info@cdebyte.com
Address: B2 and B5 Mould Park, 199# Xiqu Ave, High-tech District, Sichuan, China

Chengdu Ebyte Electronic Technology Co.,Ltd.

Copyright ©2012–2024, Chengdu Ebyte Electronic Technology Co.,Ltd.