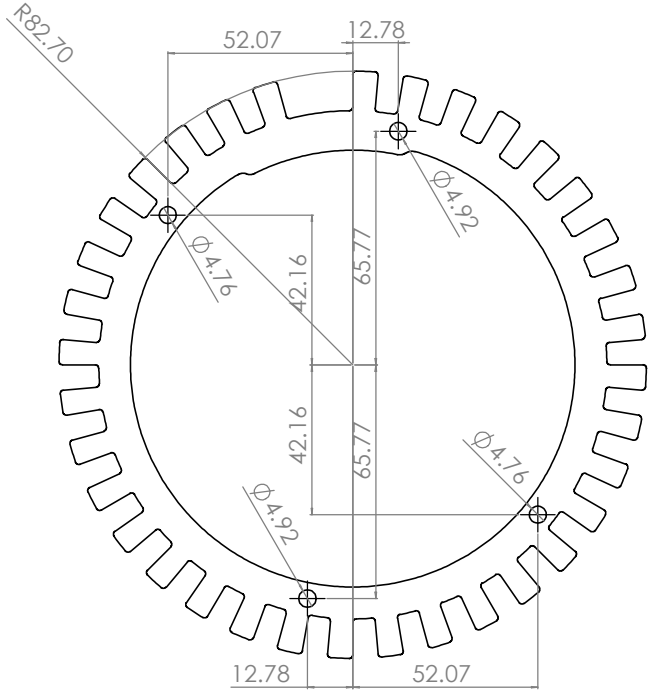

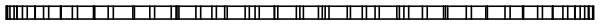

UNLESS OTHERWISE SPECIFIED:
DIMENSIONS ARE IN MILLIMETERS
SURFACE FINISH:
TOLERANCES:
LINEAR:
ANGULAR:

DRAWN:

DO NOT SCALE DRAWING

REVISION:

	NAME	SIGNATURE	DATE
DRAWN			
CHK'D			
APPV'D			
MFG			
Q.A			

MATERIAL

FINISH

DWG NO.

Pickup Wheel Drawing

SCALE:

SHEET 1 OF 1