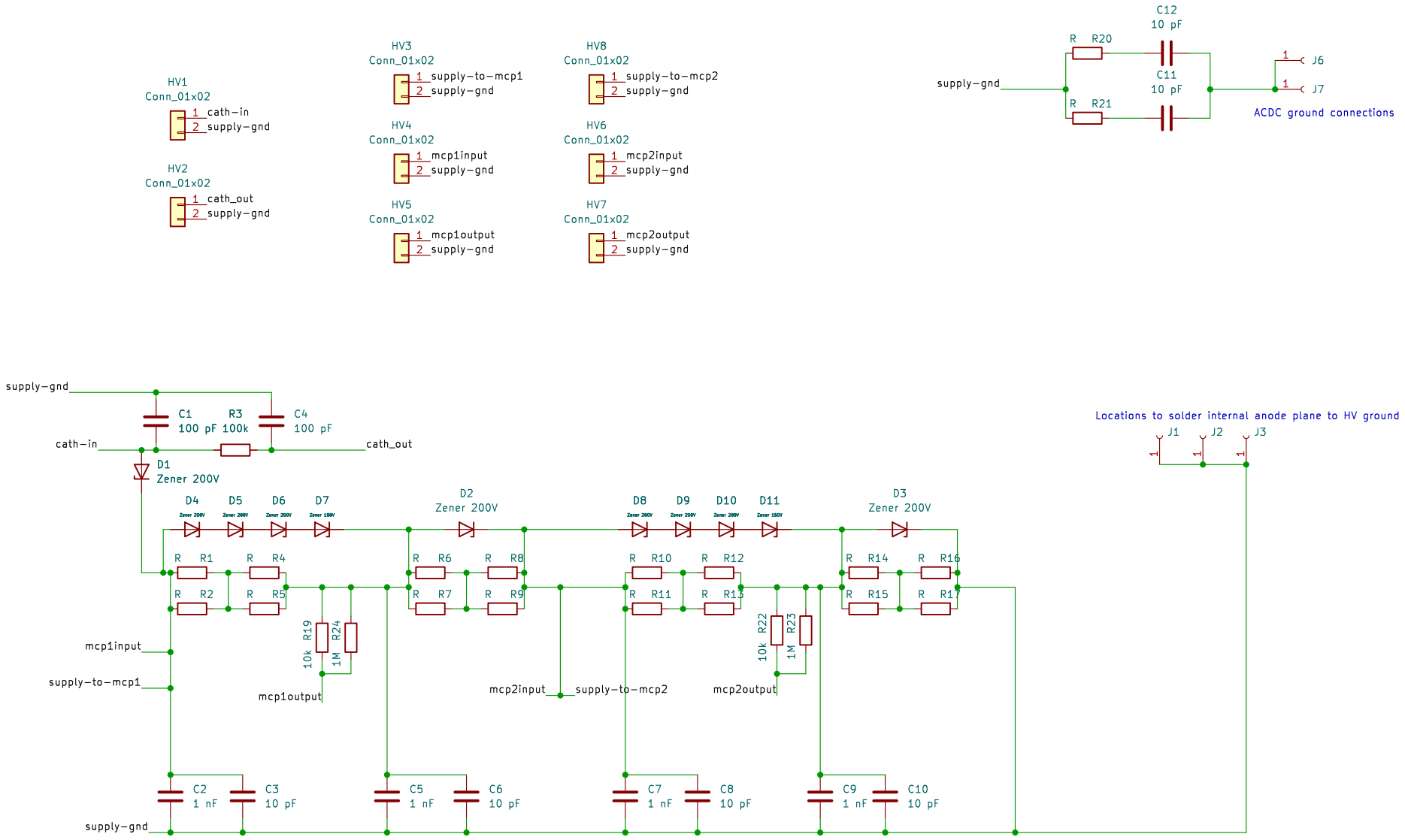
HV1
Conn_01x02
1 cath-in
2 supply-gnd
HV2
Conn_01x02
1 cath_out
2 supply-gnd
HV3
Conn_01x02
1 supply-to-mcp1
2 supply-gnd
HV4
Conn_01x02
1 mcp1input
2 supply-gnd
HV5
Conn_01x02
1 mcp1output
2 supply-gnd
HV8
Conn_01x02
1 supply-to-mcp2
2 supply-gnd
HV6
Conn_01x02
1 mcp2input
2 supply-gnd
HV7
Conn_01x02
1 mcp2output
2 supply-gnd
C12
10 pF
R R20
R R21
C11
10 pF
supply-gnd
J6
J7
ACDC ground connections
supply-gnd
C1
100 pF
R3
100k
C4
100 pF
cath-in
cath_out
D1
Zener 200V
D4 D5 D6 D7
D2
Zener 200V
D8 D9 D10 D11
D3
Zener 200V
R R1 R R4
R R2 R R5
R R6 R R8
R R7 R R9
R R10 R R12
R R11 R R13
R R14 R R16
R R15 R R17
10k R19
1M R24
10k R22
1M R23
mcp1input
supply-to-mcp1
mcp1output
mcp2input
supply-to-mcp2
mcp2output
Locations to solder internal anode plane to HV ground
J1 J2 J3
C2
1 nF
C3
10 pF
C5
1 nF
C6
10 pF
C7
1 nF
C8
10 pF
C9
1 nF
C10
10 pF
supply-gnd