High Dynamic Range Optical Devices and Applications

Ph.D. Dissertation Defense

Elijah R. Jensen

About Me:

- B.S. Physics @ Austin Peay State
- Electrical Engineering @ UVM
- M.S. Physics @ UofL

- Antenna Design/Circuit Design
- Electro-Mechanical Design
- Electrodynamics/Optics
- Aeronautics

Questions:

- What can we do with Remote Infrared Sensing?
- What is currently done/used for remote sensing?
- How can we improve?

What can we do with IR sensing?

- Non-Contact Human Health Monitoring
- Structural Health Monitoring
- Earth Surface Motion and/or Seismic Sensing
- Material Reliability Analysis
- Astronomy

What makes passive sensing useful?

- Passive sensing does not interfere with the object or structure being tested.
- Simple setup. (from a users point of view)
- Use the environment to measure values of interest.

What is currently used for remote sensing?

- High Speed Cameras
- Machine Vision Cameras
- Photodiodes

Goals:

- Detection of Small Surface Modulations
- Development of Novel High Dynamic Range Hardware
- Development of Test Apparatus

Electromagnetic Spectrum

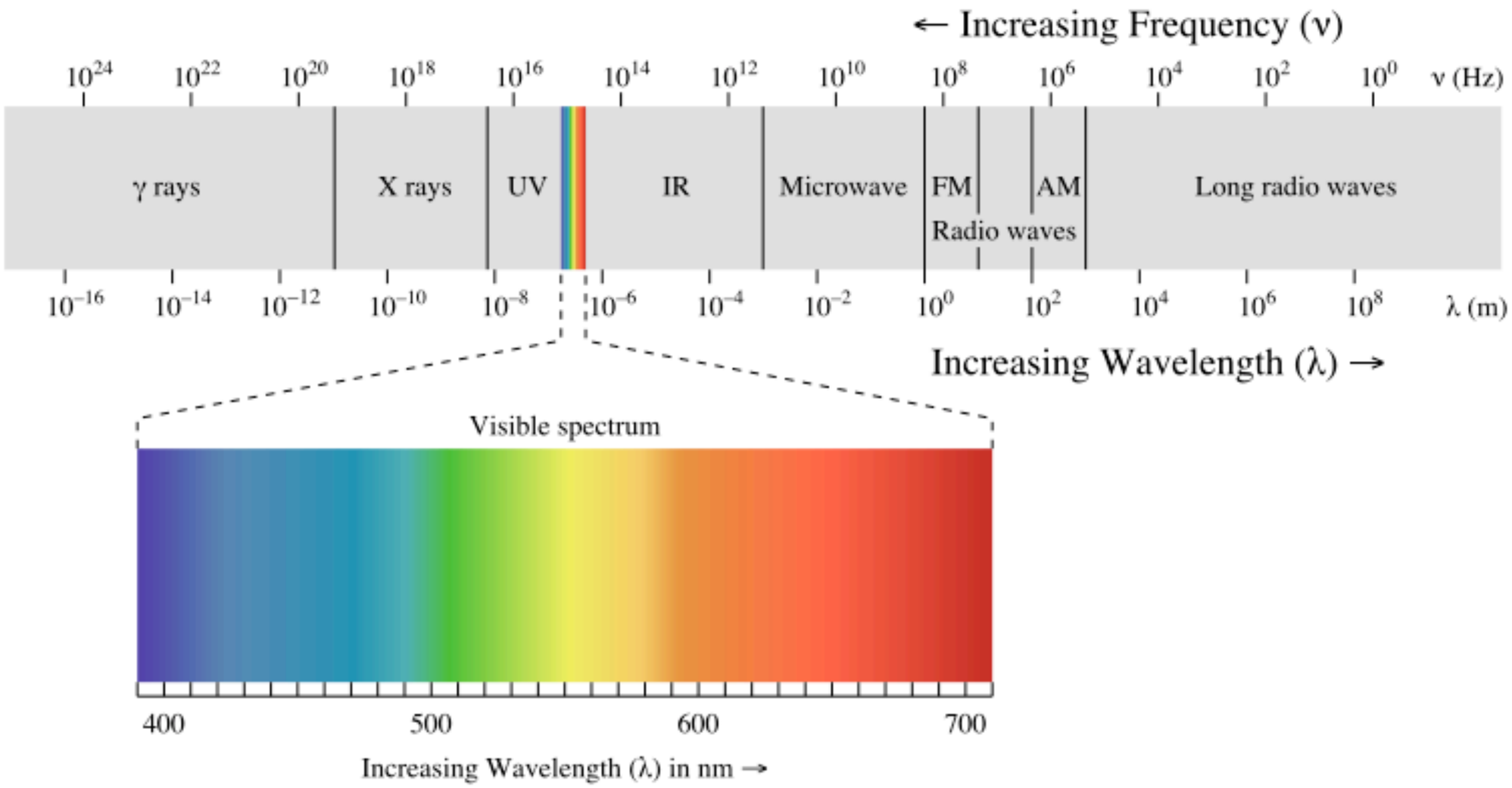

Why Use IR?

Why not both?

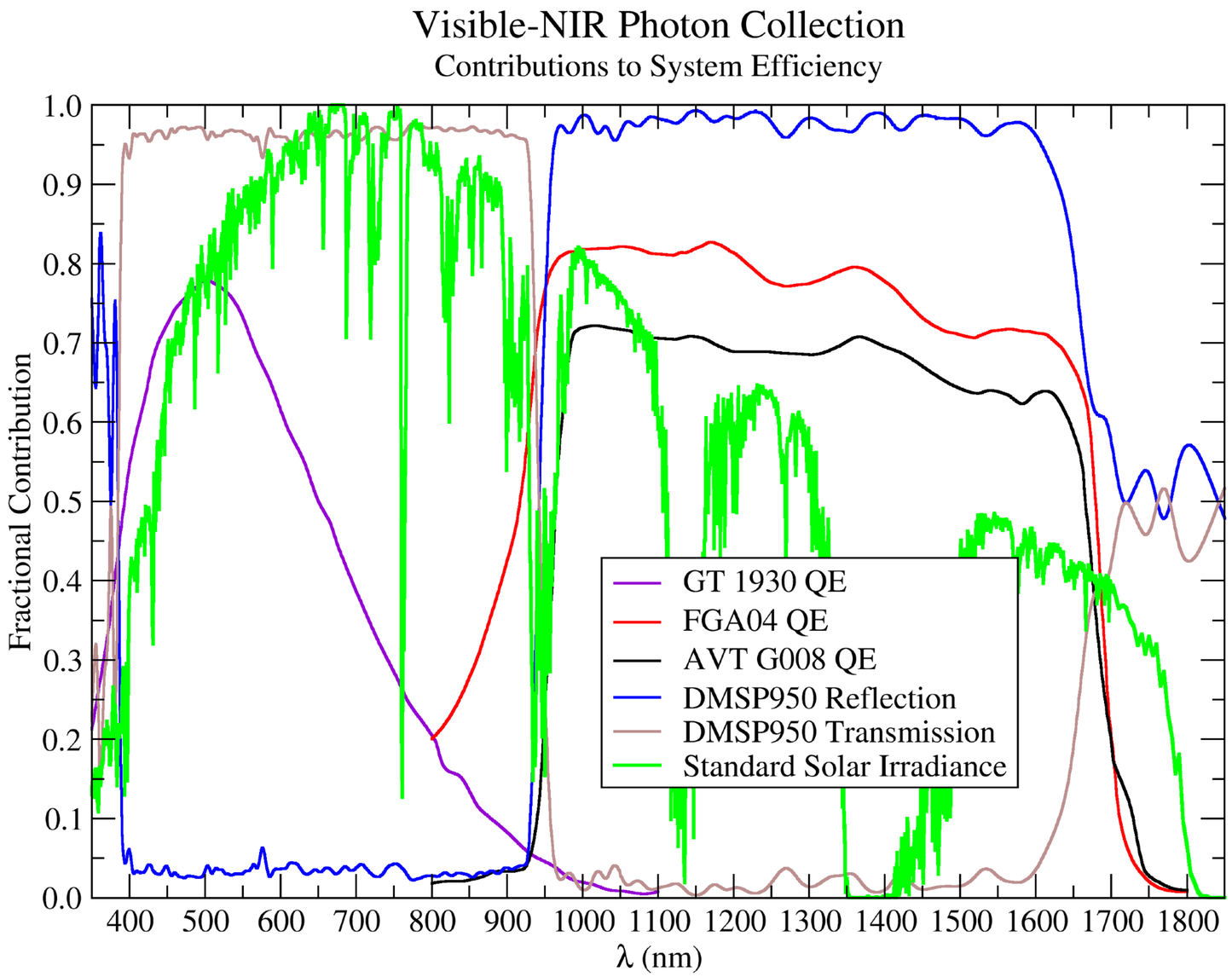

Hardware Development

- Single Fiber Hardware (DAQ Hardware)
- Camera Hardware
- Test Apparatus Development (Pinger)

DAQ Development

- High Dynamic Range
- Photodiode Noise Floor ~ 1e-6V DR = 20log(5/1e-6) = 133dB
- Want at least 133dB Dynamic Range DAQ Unit.
- DR= 6.02N+1.76dB ==> ~22 bit resolution.
- Signal range ~500 Hz

- 24 Bit Converter
- 2000SPS

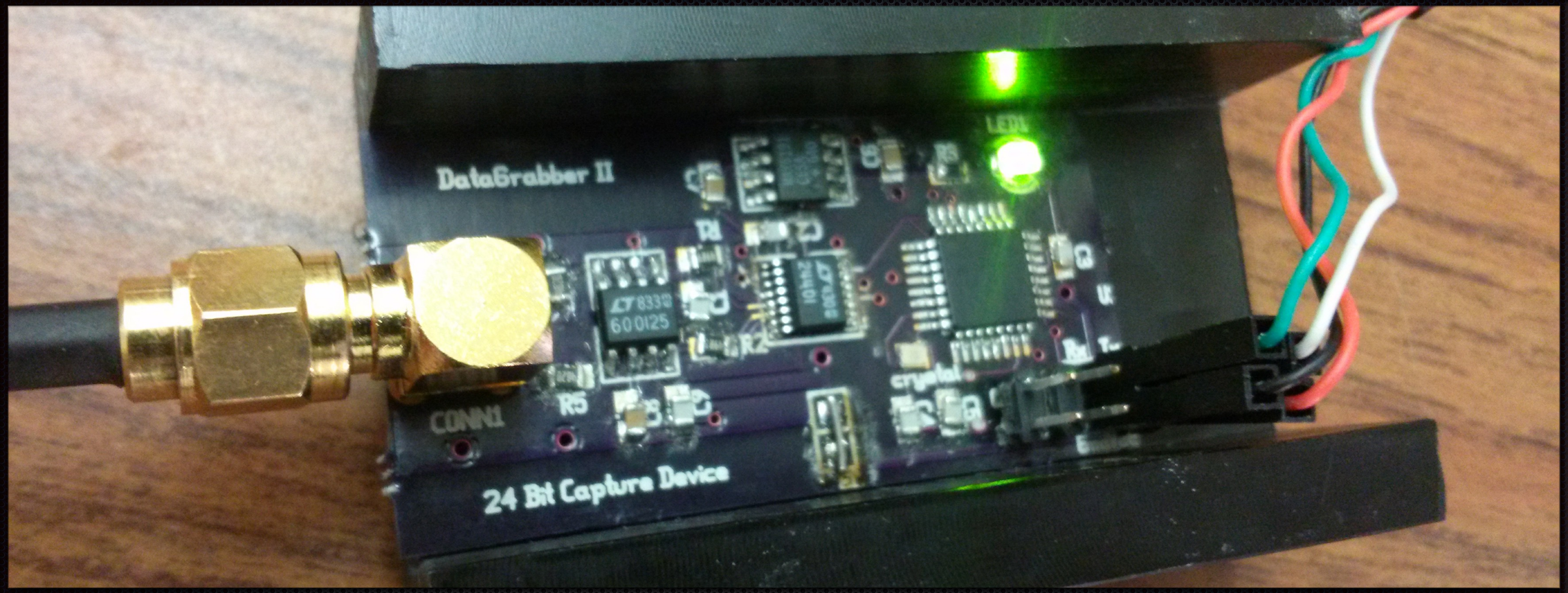

24 Bit DAQ

LTC2205 ADC 840SPS

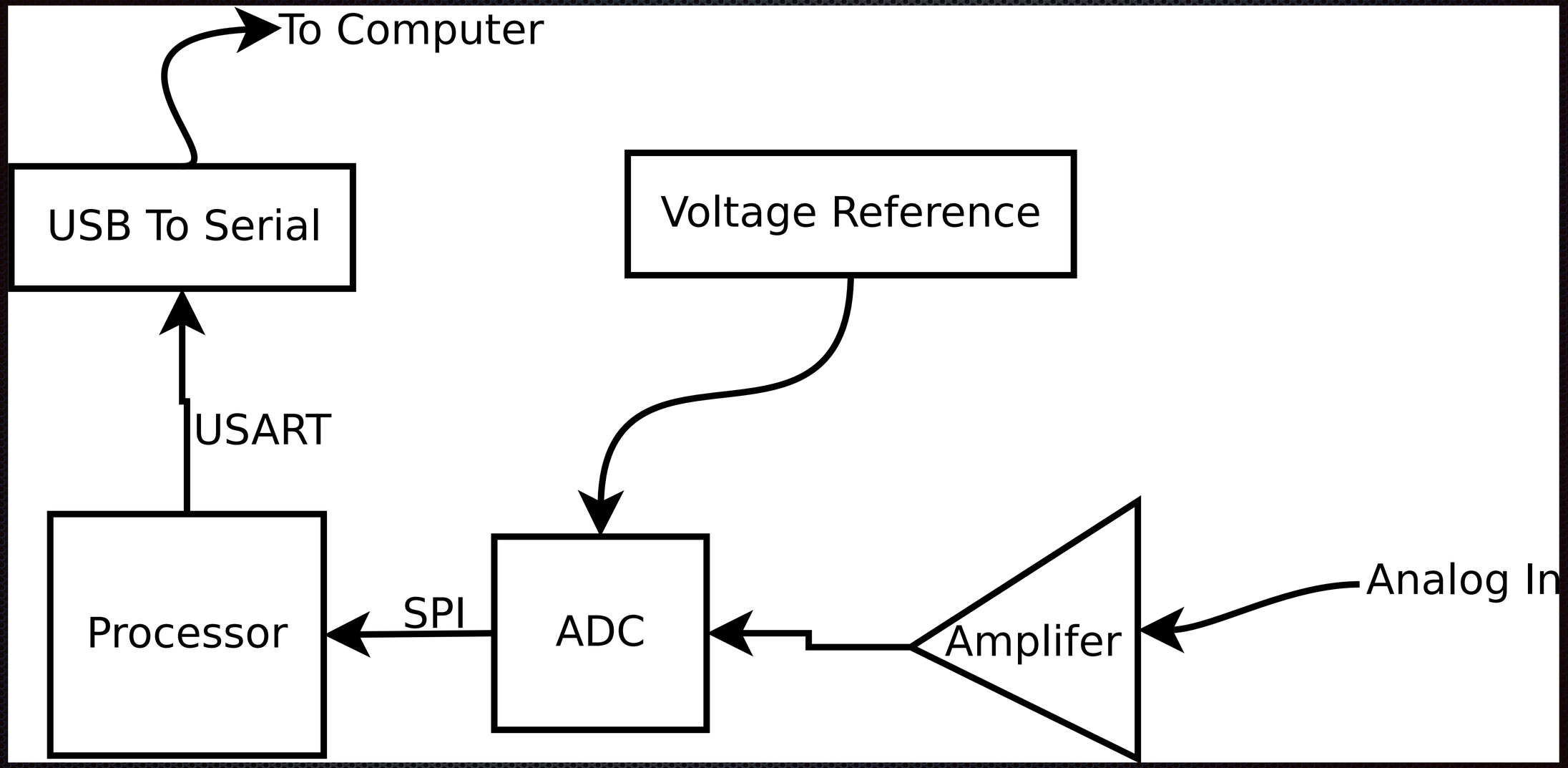
To Computer
USB To Serial
Voltage Reference
USART
Processor
SPI
ADC
Amplifer
Analog In

24-bit Results

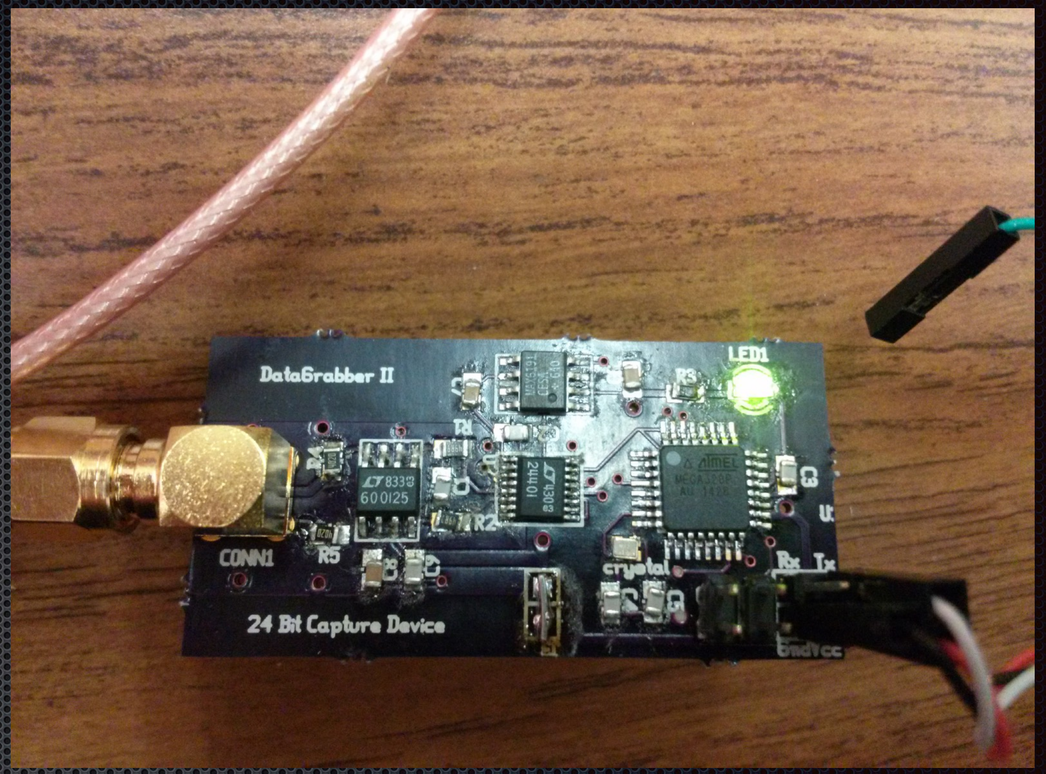

- ~95dB to 110dB Dynamic Range
- ~ 16 to 18 ENOB
- Not Good Enough / Industry standard DR

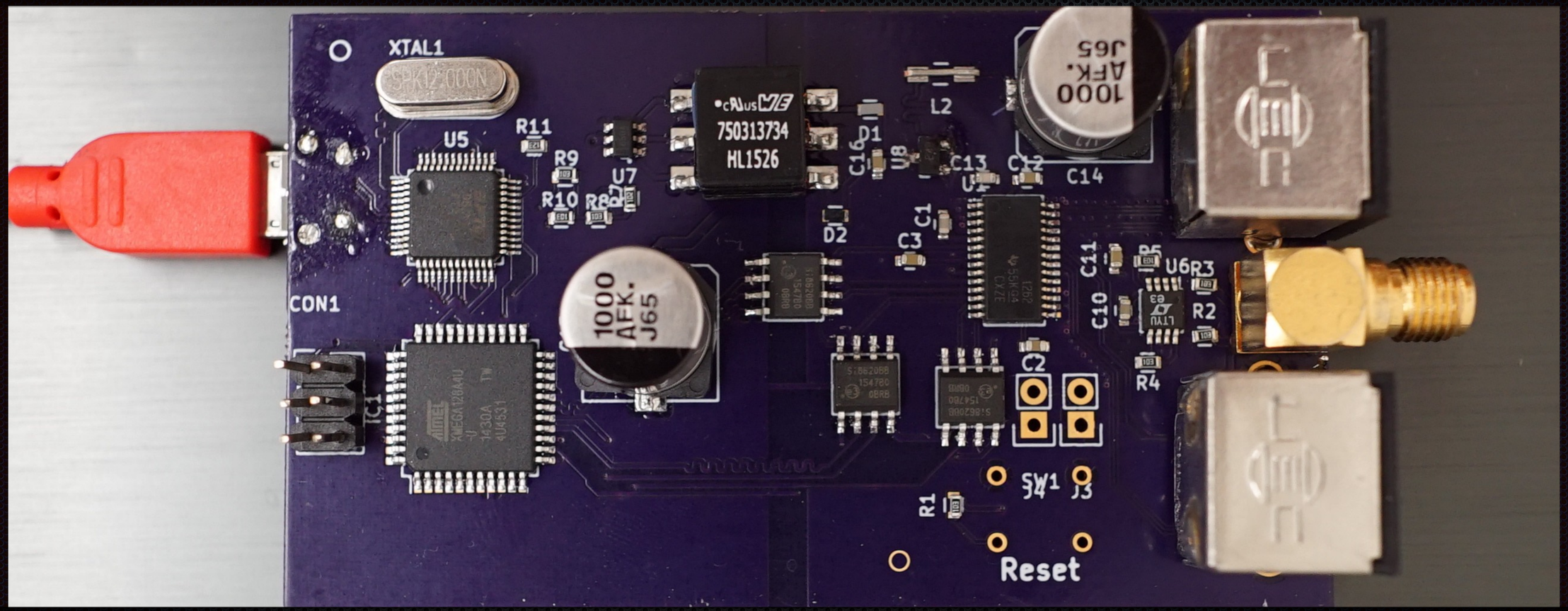

32Bit TI DAQ

Texas Instruments ADS1206

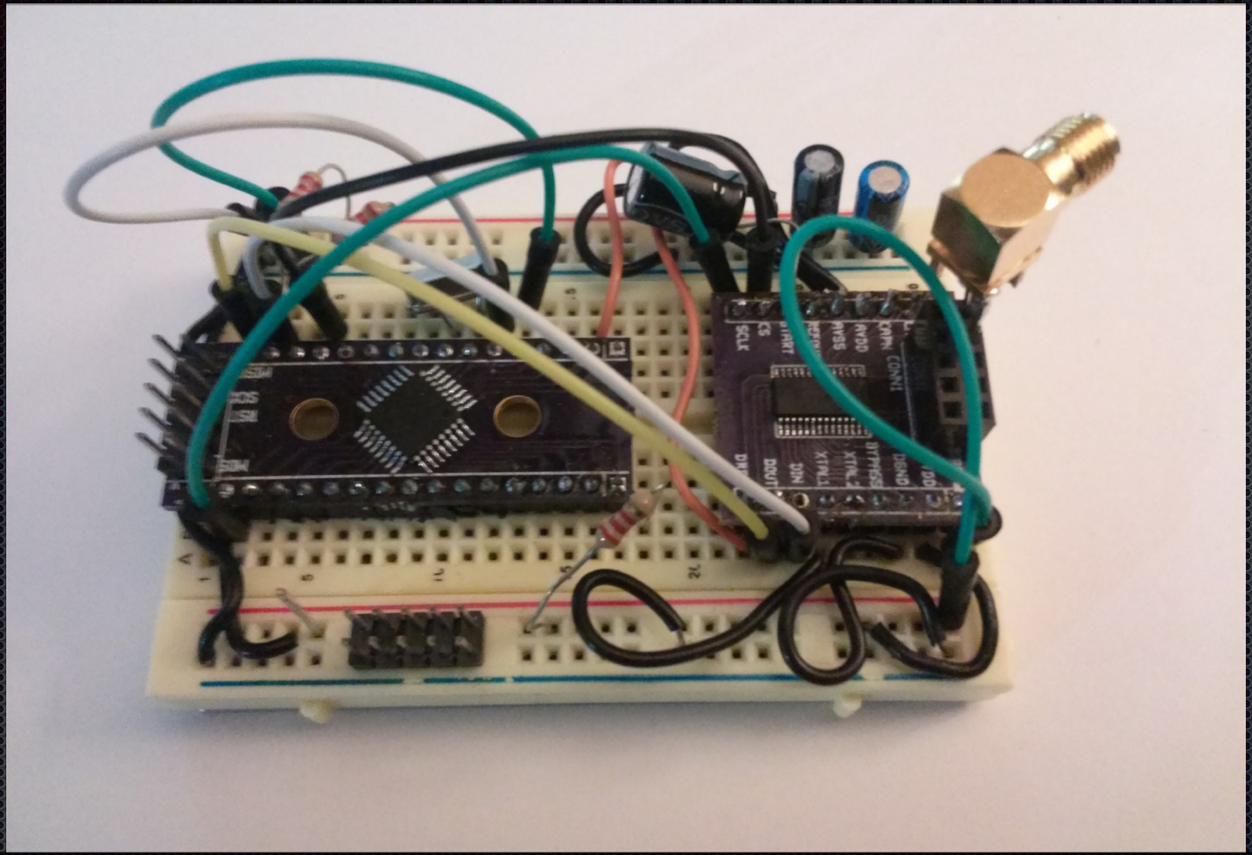

Breadboard Design

Circuit Testing

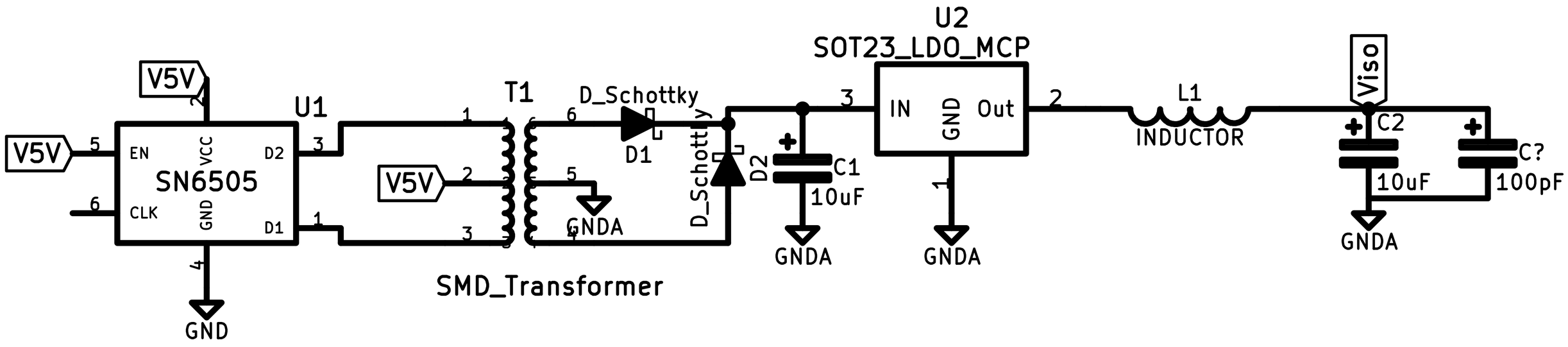

Isolation Power Supply For Analog Circuitry

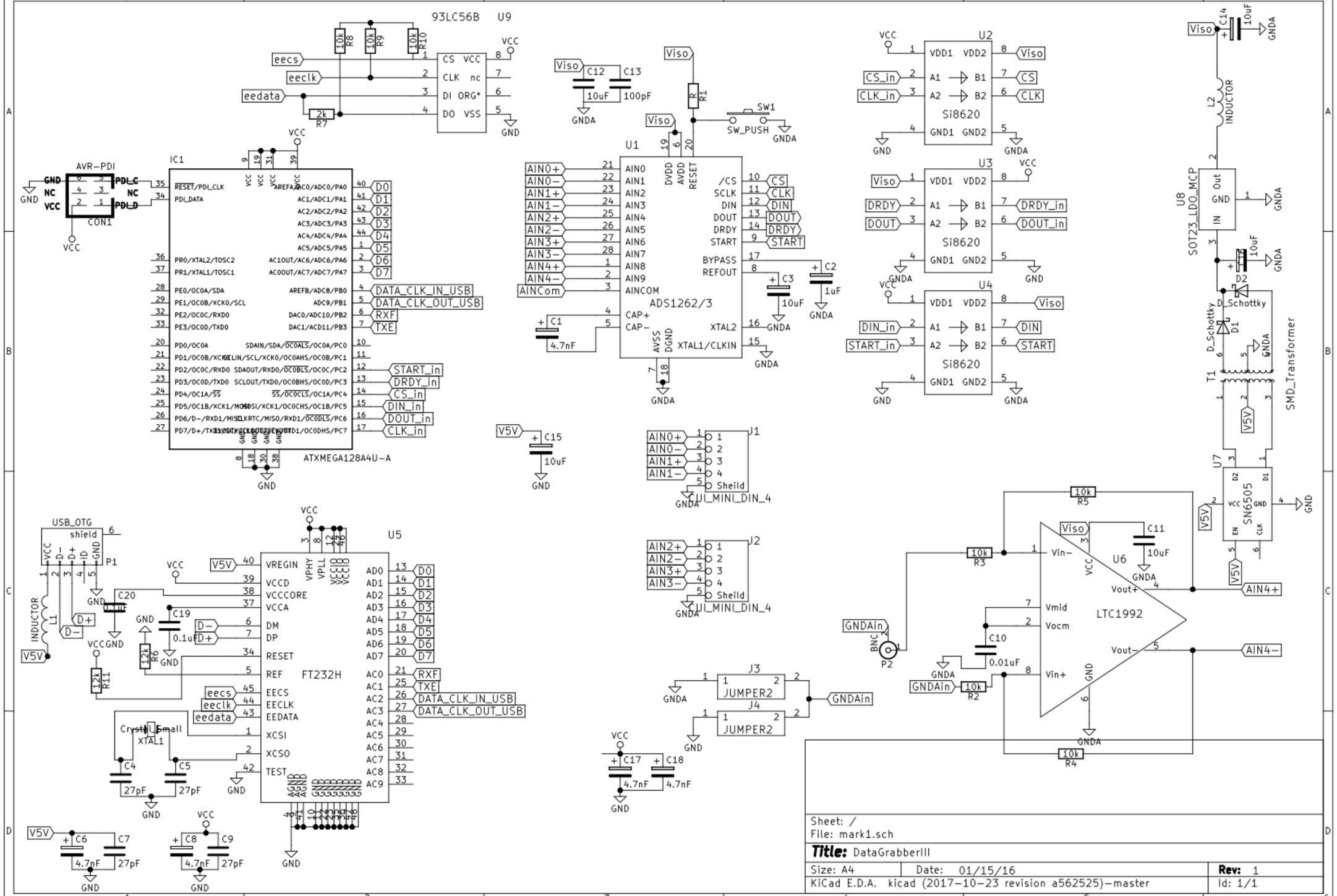
93LC56B U9
CS VCC
CLK nc
DI ORG*
DO VSS
eecs
eeclk
eedata
IC1
ATXMEGA128A4U-A
AVR-PDI
CON1
U1
ADS1262/3
U2
U3
U4
Si8620
SW1
SW_PUSH
U5
FT232H
USB_OTG
P1
J1
J2
CUI_MINI_DIN_4
J3
J4
JUMPER2
U6
LTC1992
P2
U7
SN6505
U8
SOT23_LDO_MCP
L2
INDUCTOR
T1
SMD_Transformer
D_Schottky
Sheet: /
File: mark1.sch
Title: DataGrabberIII
Size: A4
Date: 01/15/16
Rev: 1
KiCad E.D.A. kicad (2017-10-23 revision a562525)-master
Id: 1/1

TI 32bit DAQ Results

- Inconclusive
- Multiple Failure Modes
- (Data Loss)
- (Mechanical Connector Damage)
- High Dynamic Range was achieved 156dB @ 100SPS

Linear Technology

New 32bit ADC

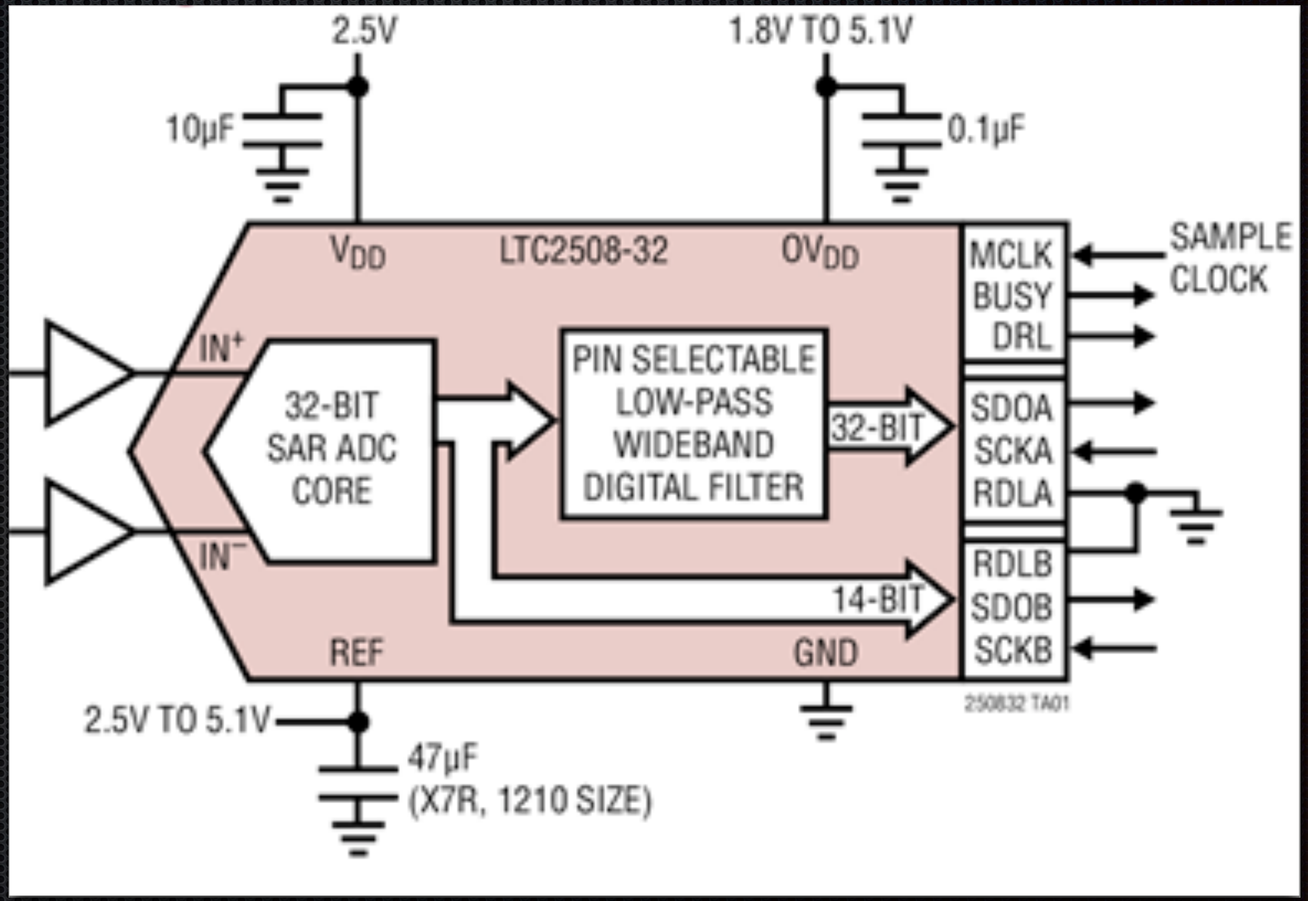

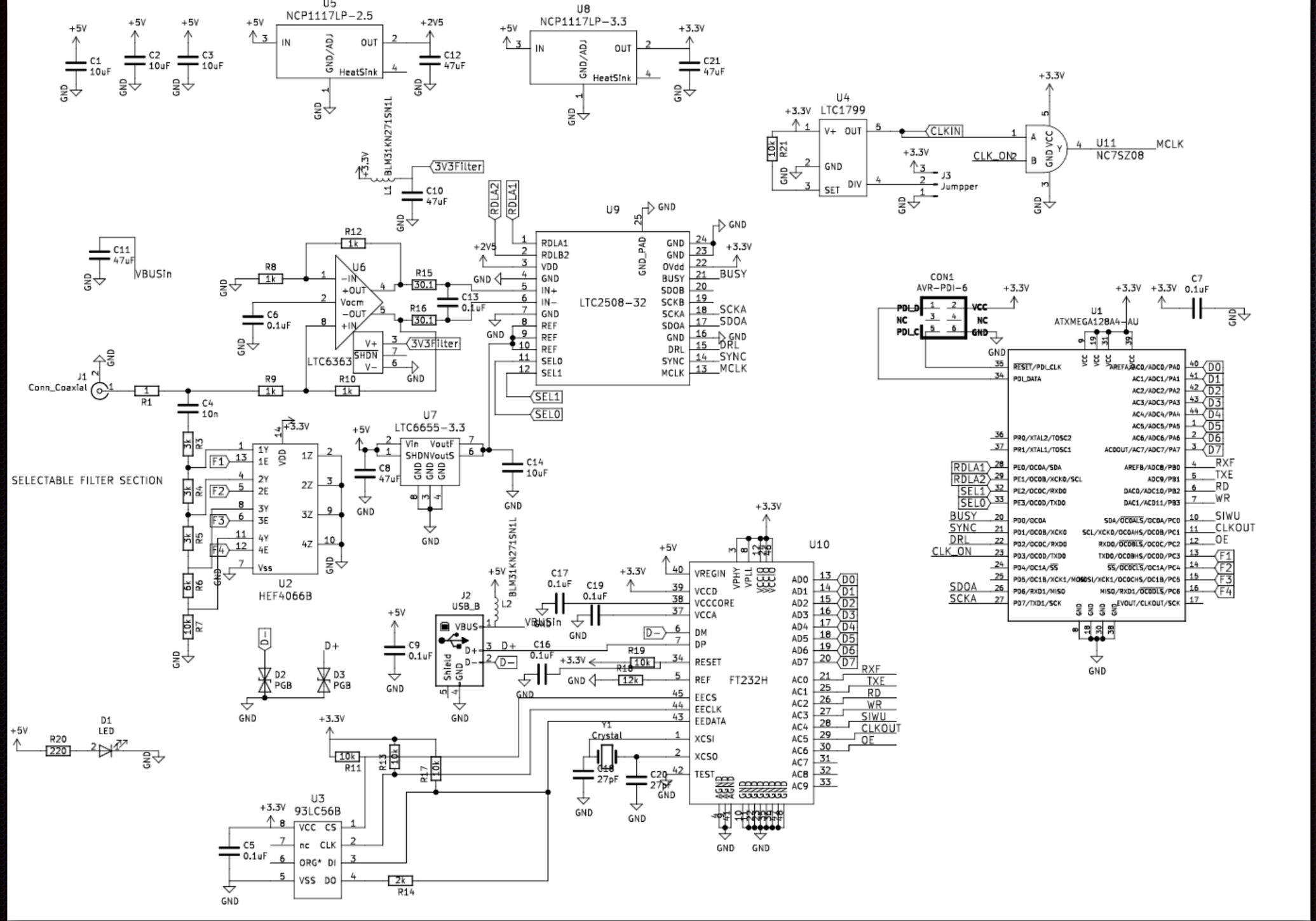
U5
NCP1117LP-2.5
U8
NCP1117LP-3.3
U4
LTC1799
U11
NC7SZ08
MCLK
CLKIN
CLK_ON2
J3
Jumpper
3V3Filter
BLM31KN271SN1L
U9
LTC2508-32
U6
LTC6363
VBUSIn
Conn_Coaxial
SELECTABLE FILTER SECTION
U2
HEF4066B
U7
LTC6655-3.3
J2
USB_B
D2
PGB
D3
PGB
D1
LED
U3
93LC56B
U10
FT232H
Crystal
CON1
AVR-PDI-6
U1
ATXMEGA128A4-AU
SEL1
SEL0
BUSY
SYNC
DRL
SDOA
SCKA
RXF
TXE
RD
WR
SIWU
CLKOUT
OE
D0
D1
D2
D3
D4
D5
D6
D7
F1
F2
F3
F4

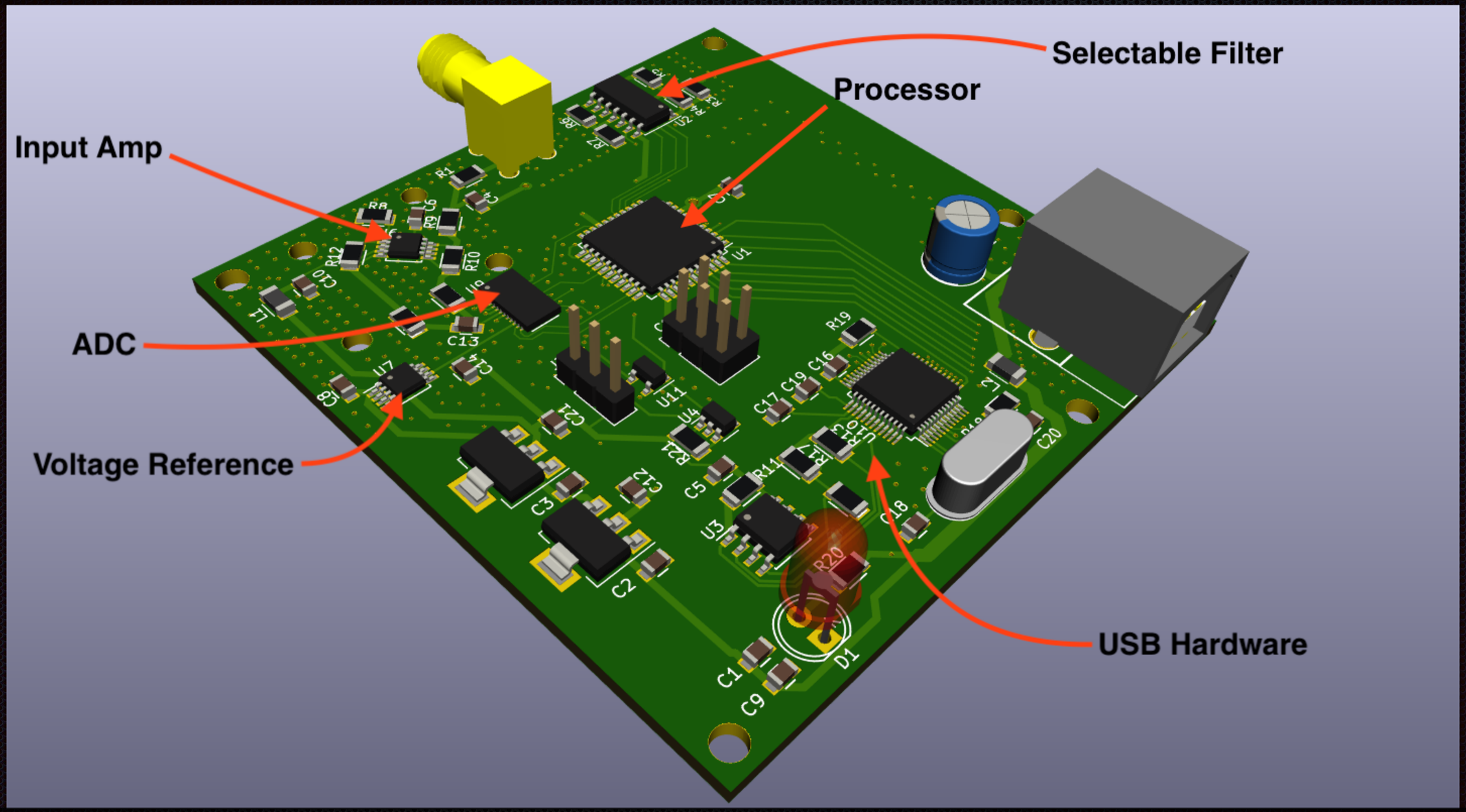

32 Bit DAQ Design PCB

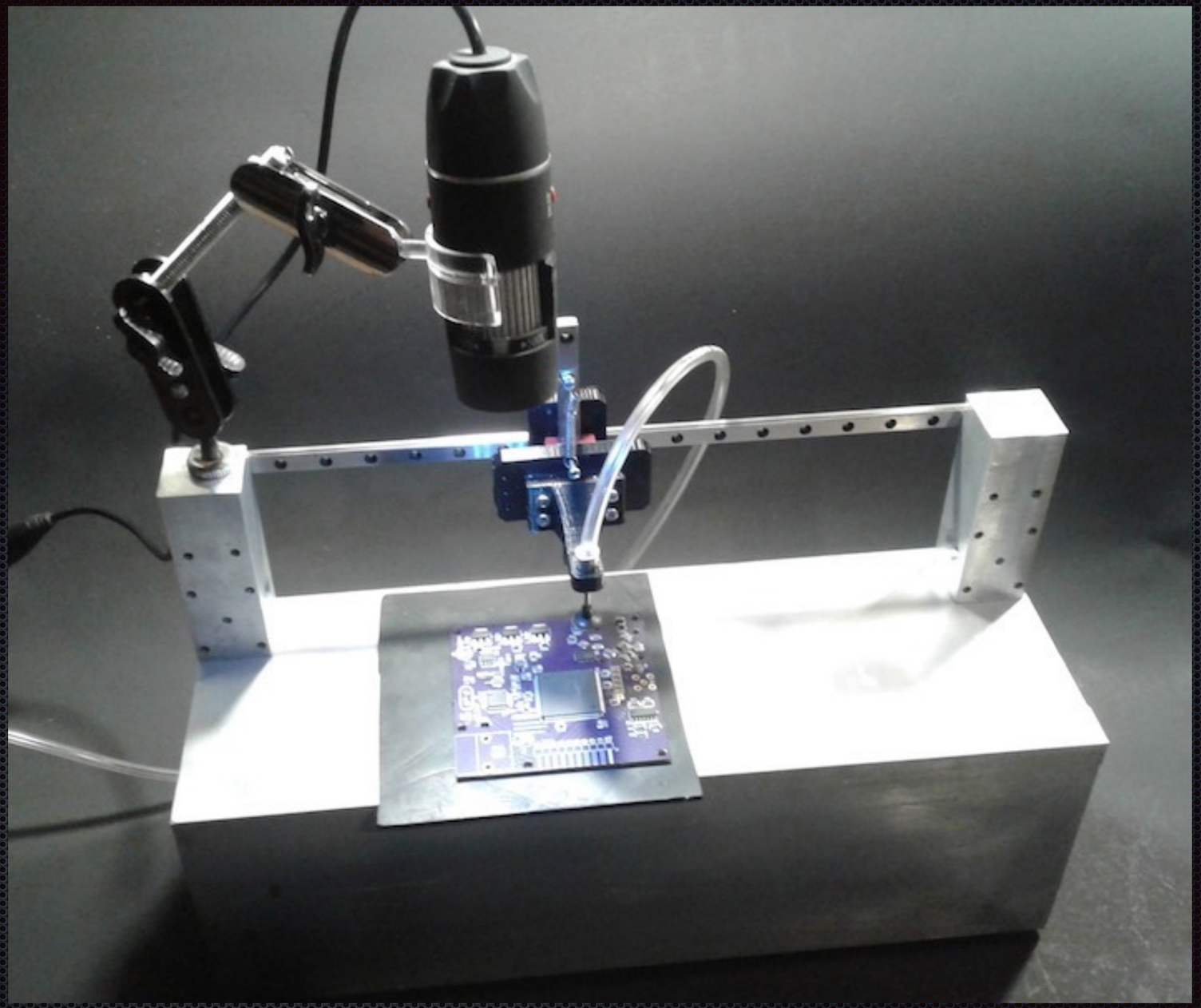

Solder Helper!

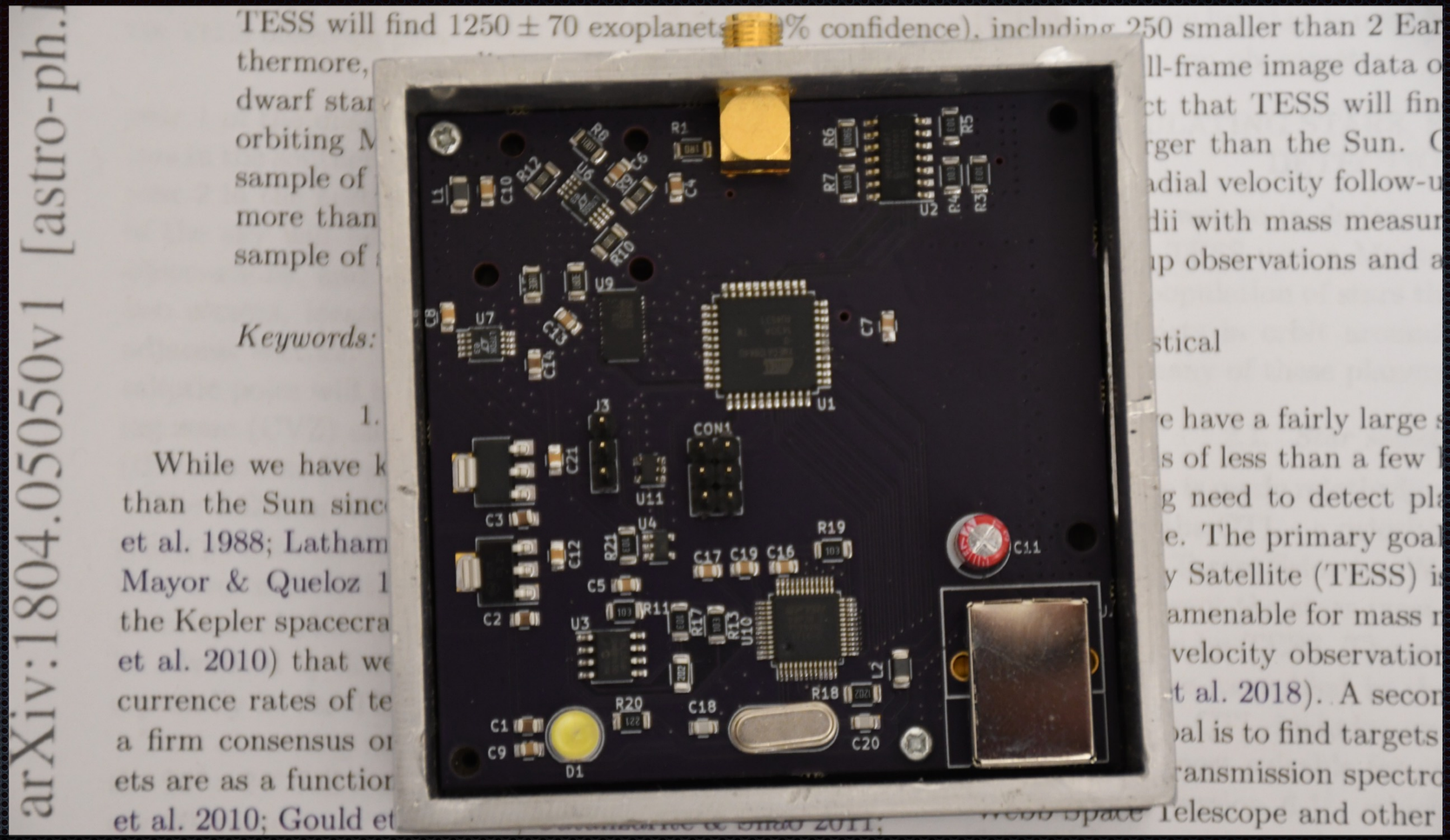

32Bit DAQ

LTC 2605 ADC ~4000 SPS

Desktop — -bash — 90×27

```
Apples-MacBook-Pro:Desktop apple$ dg32
WELCOME TO DATAGRABBER 32 DAQ COMMAND LINE INTERFACE!

Usage:

To set the capture speed:   dg32 -s speedvalue

Speed Value                             Samples Per Second
1                                       61
2                                       244
3                                       976
4                                       3906


To capture a set of data:   dg32 -c samples -o filename.dat

Apples-MacBook-Pro:Desktop apple$
```

32bit vs. 24bit DAQ Noise Performace

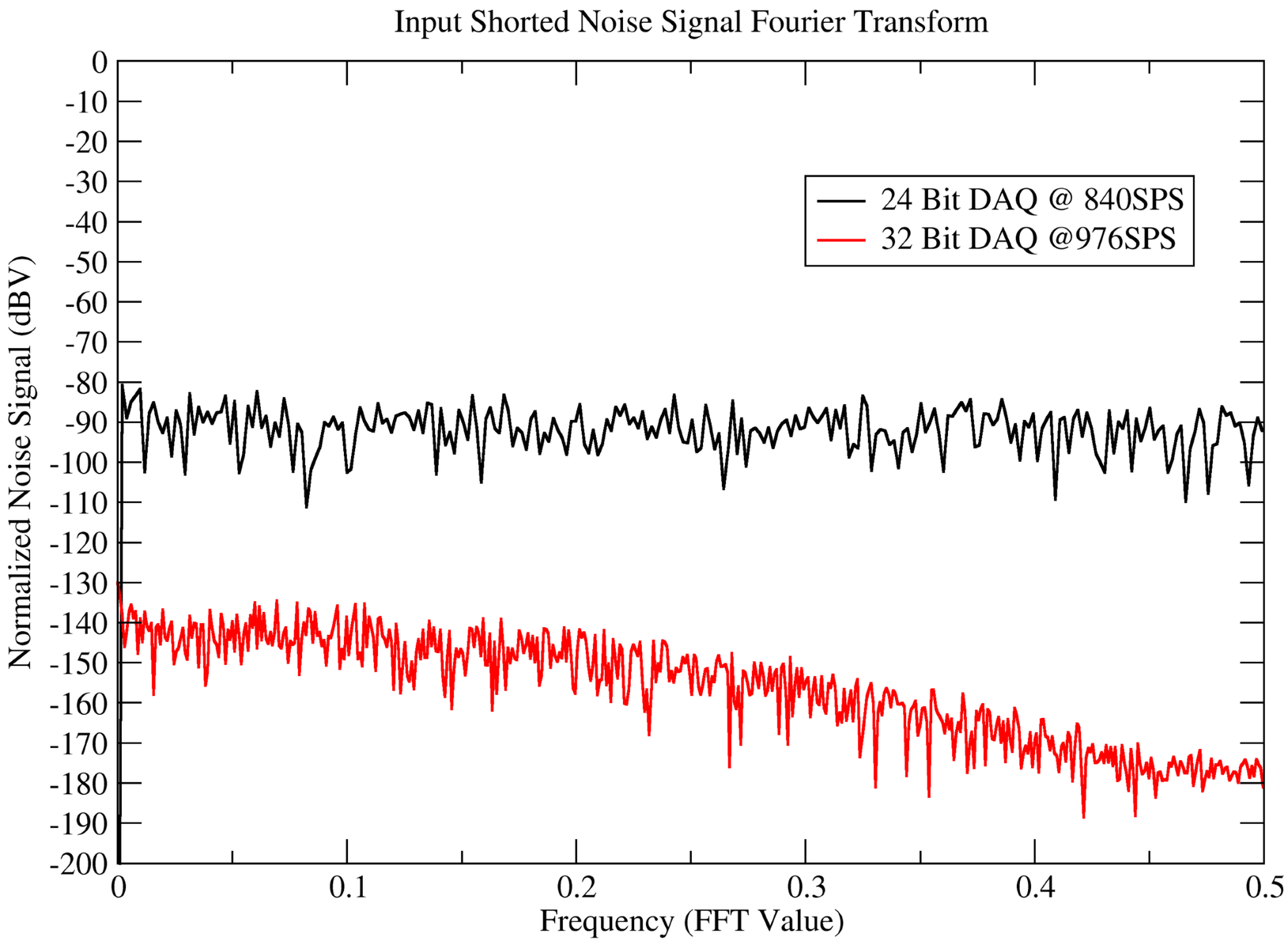

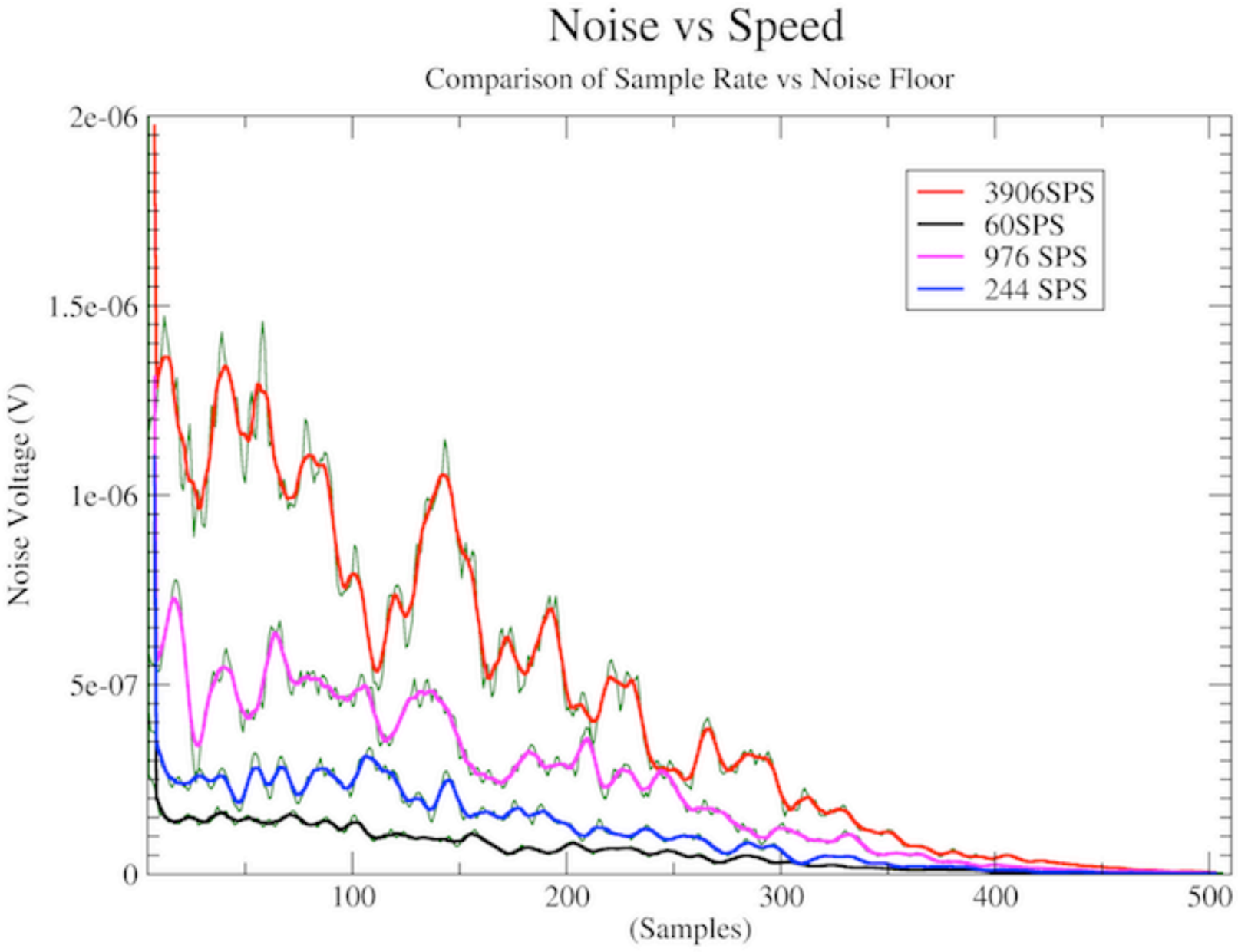
Noise vs Speed
Comparison of Sample Rate vs Noise Floor
2e-06
1.5e-06
1e-06
5e-07
0
Noise Voltage (V)
100
200
300
400
500
(Samples)
3906SPS
60SPS
976 SPS
244 SPS

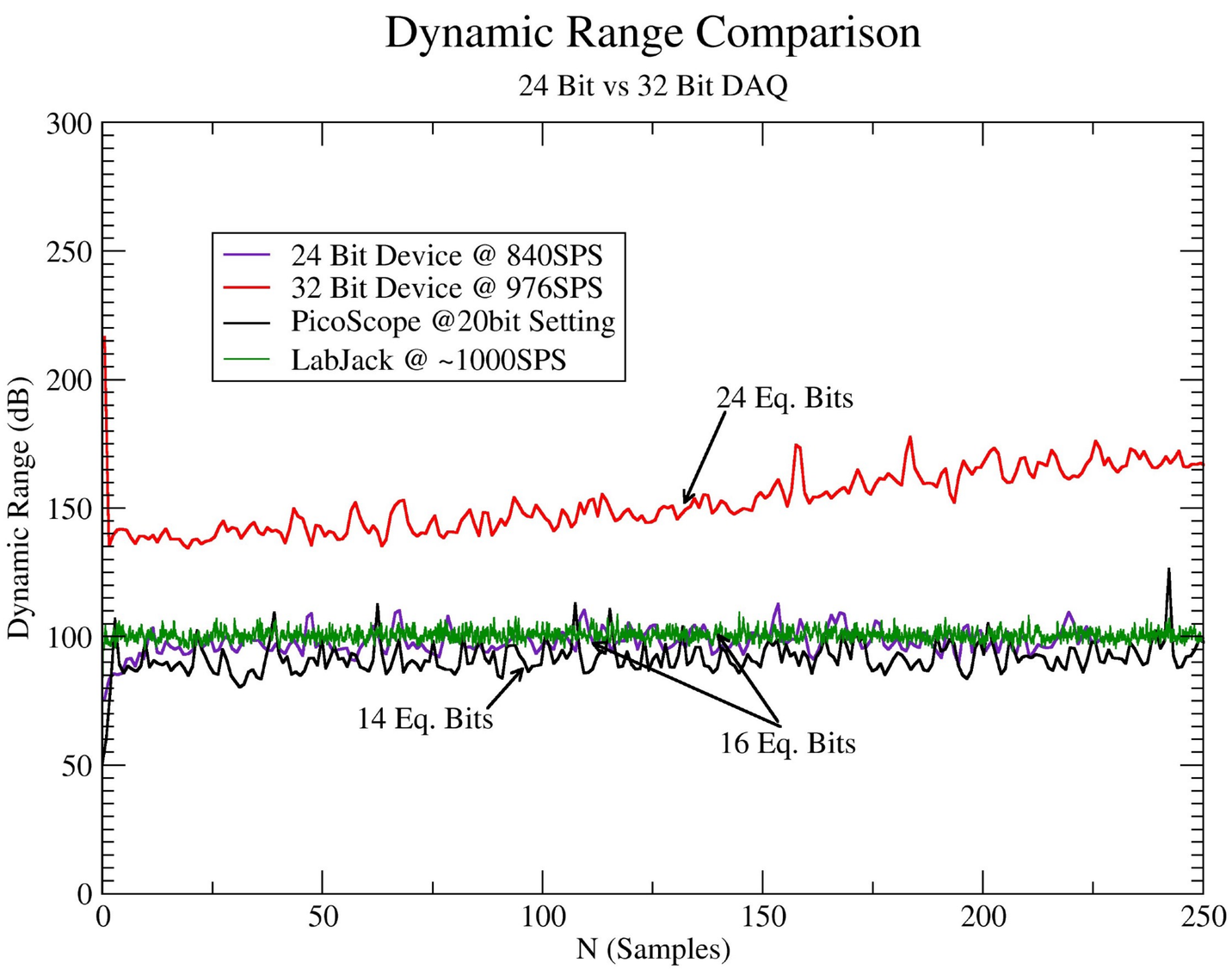
Dynamic Range Comparison
24 Bit vs 32 Bit DAQ
24 Bit Device @ 840SPS
32 Bit Device @ 976SPS
PicoScope @20bit Setting
LabJack @ ~1000SPS
24 Eq. Bits
14 Eq. Bits
16 Eq. Bits
Dynamic Range (dB)
N (Samples)
0
50
100
150
200
250
300

Conclusions

- Achieved High Dynamic Range (24-bit @ ~900SPS)
- Achieved Robust USB Design for field use
- Can be synchronized!

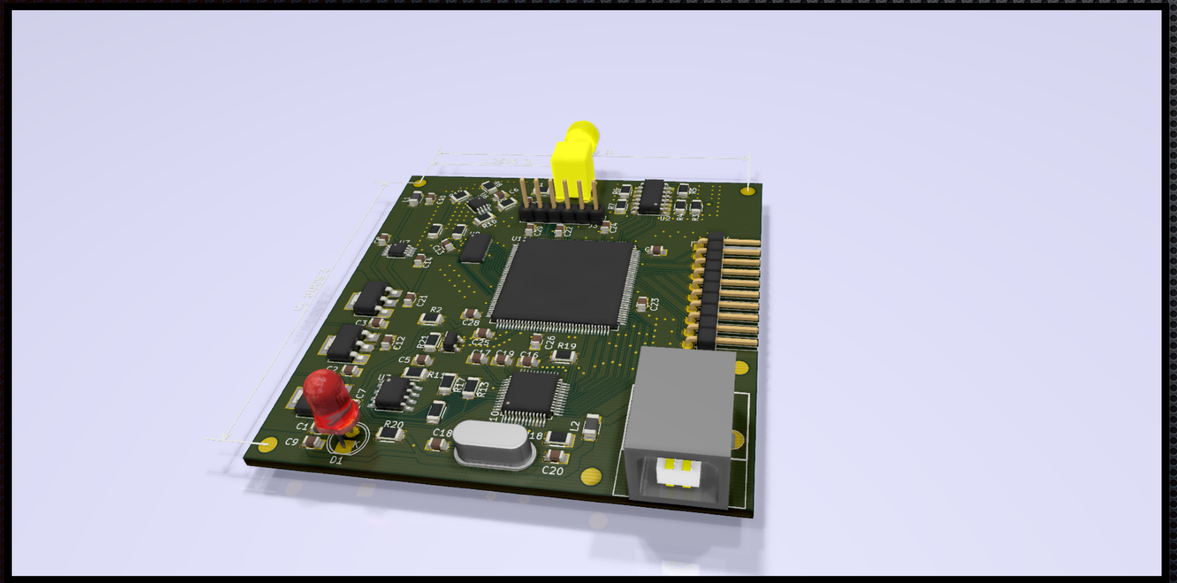

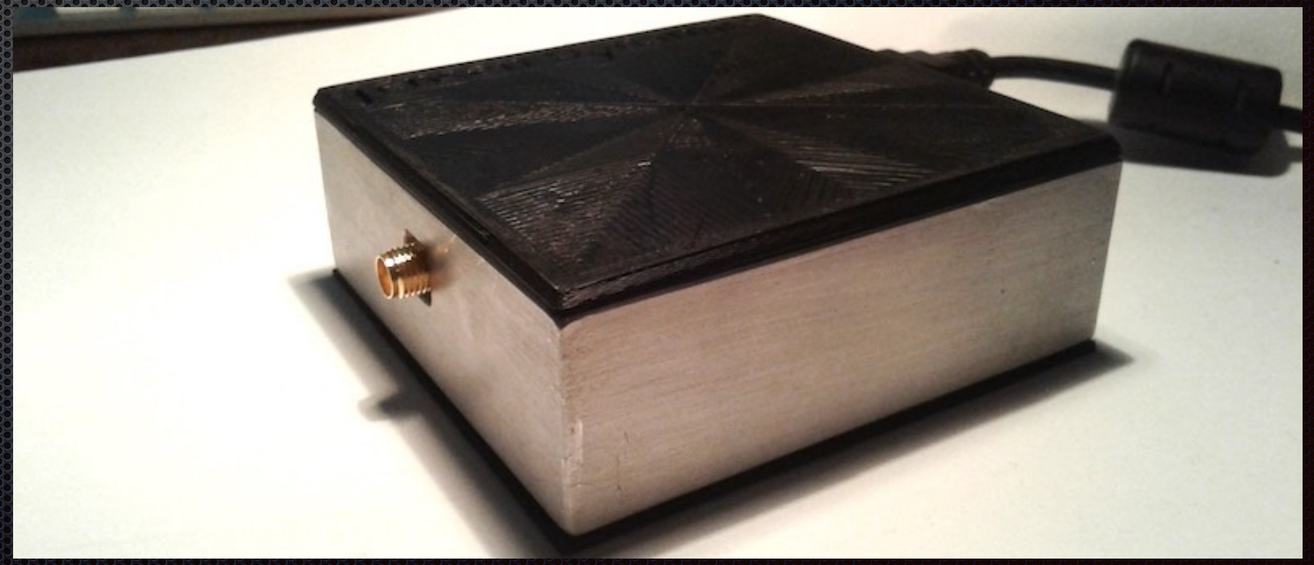

Future Improvements

- Higher Sample Rates
- Better Interfacing (Ethernet)
- Even Higher Dynamic Range (Multiple Devices/ Topologies)
- Multiple Synced Channels

Fiber Positioner Design

Dual IR Movable Fiber
Visible HighSpeed Camera

Fiber Positioner

- High Dynamic Range for Selected Pixels
- High Resolution Images and Focusing
- “Full” Spectrum Sensing

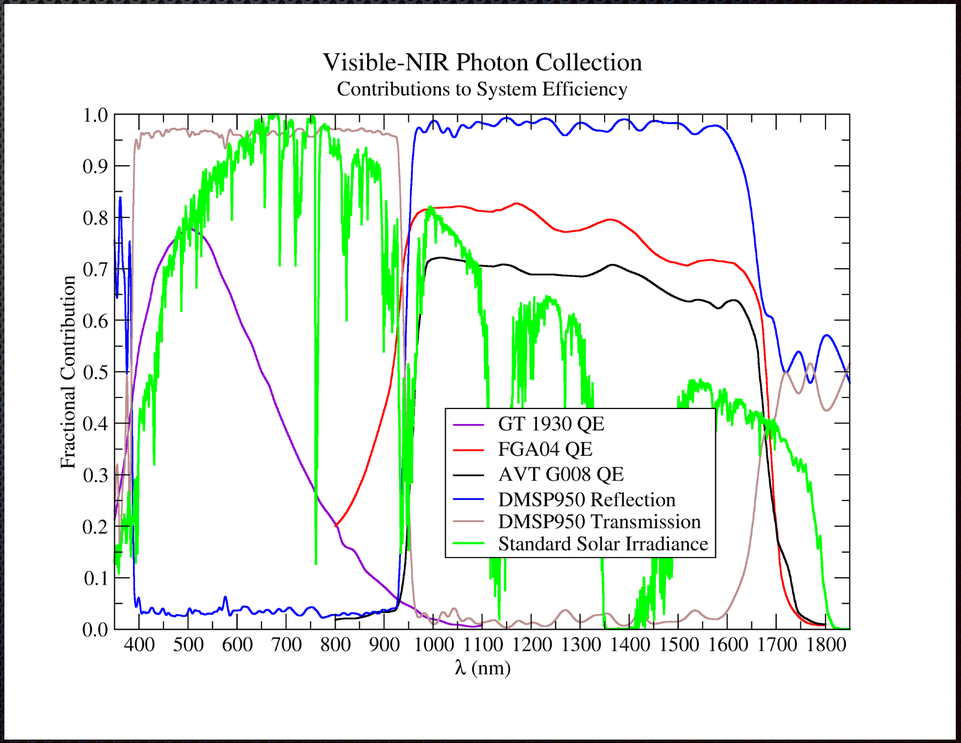

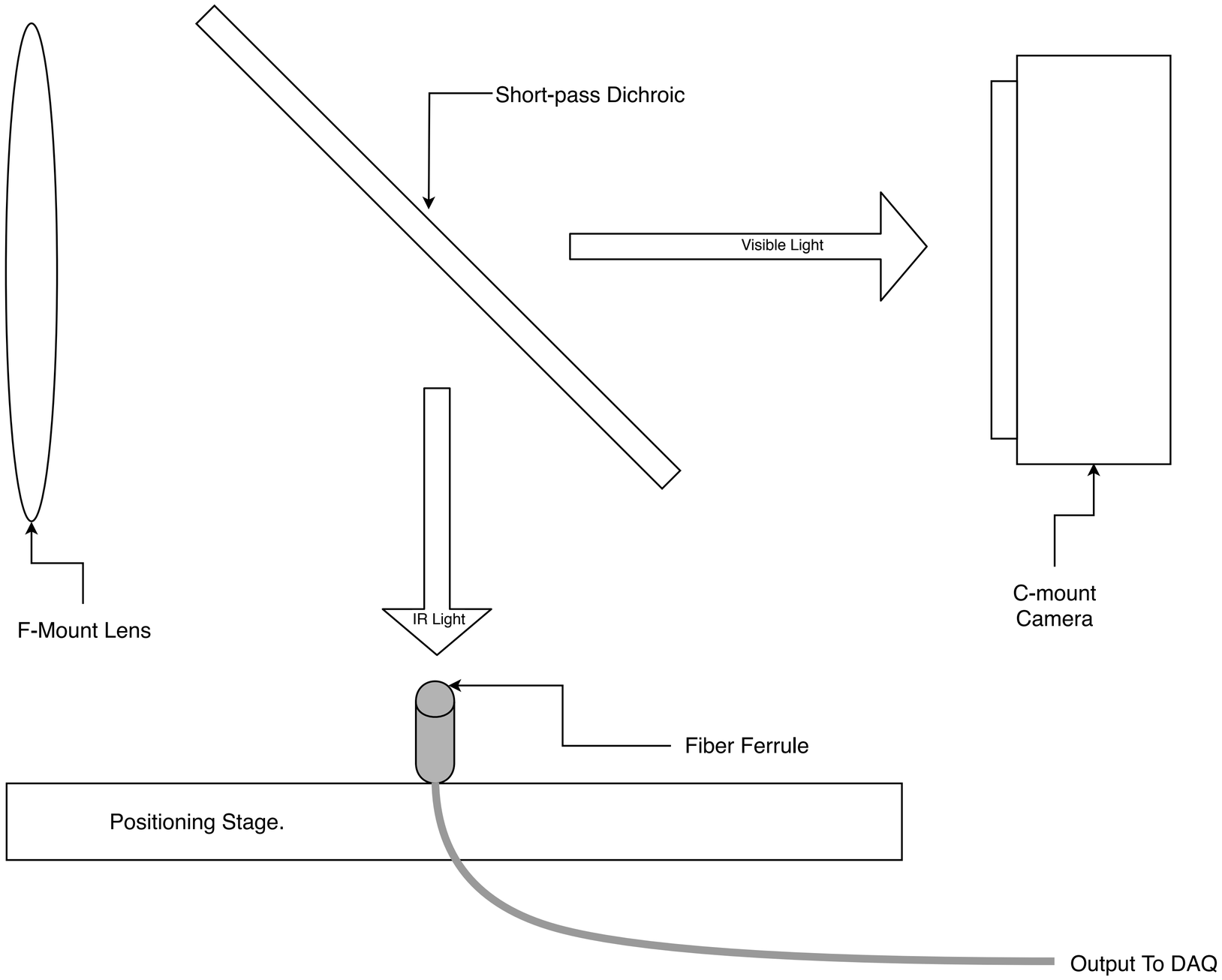
Short-pass Dichroic
Visible Light
F-Mount Lens
IR Light
C-mount
Camera
Fiber Ferrule
Positioning Stage.
Output To DAQ

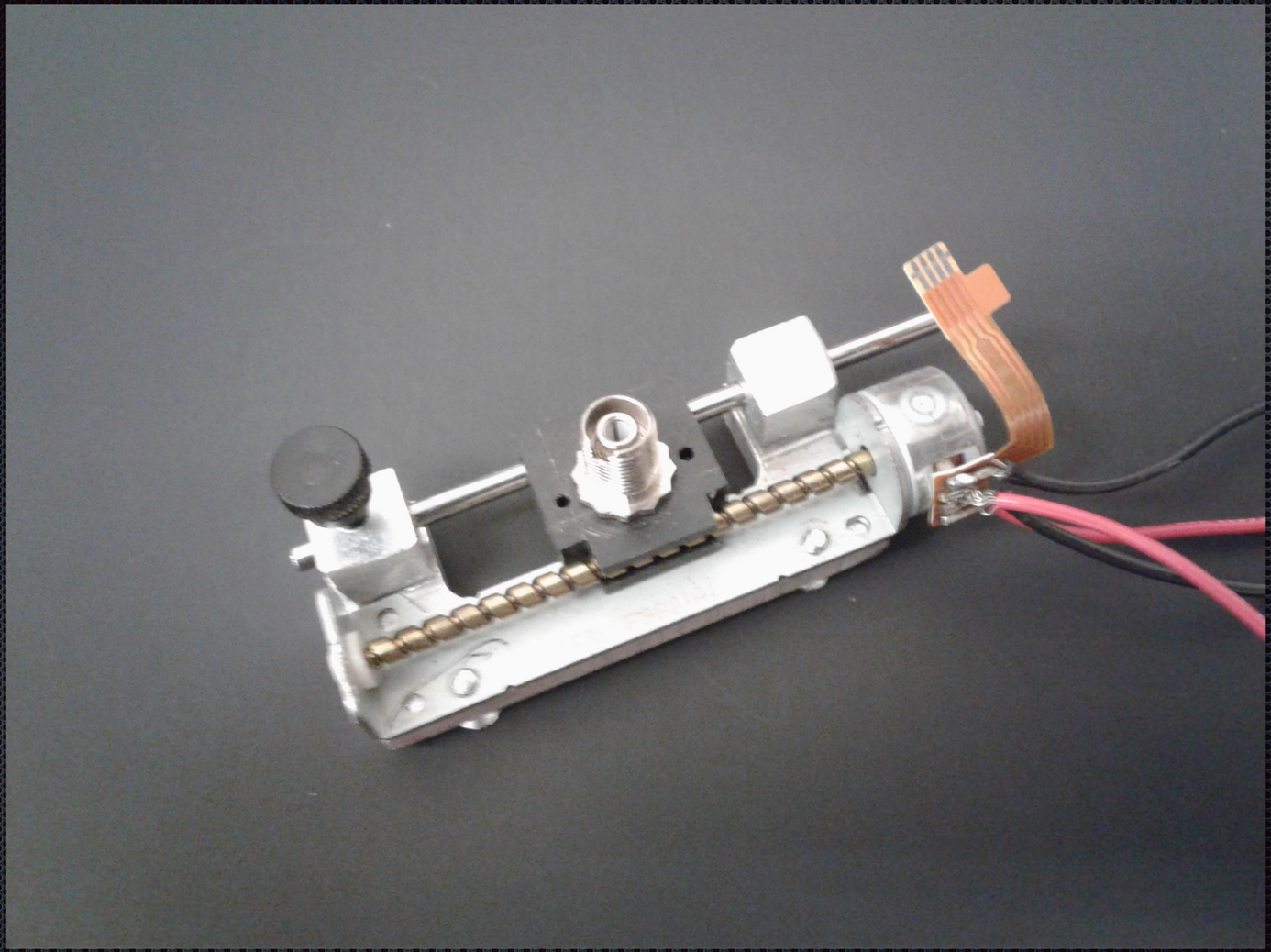

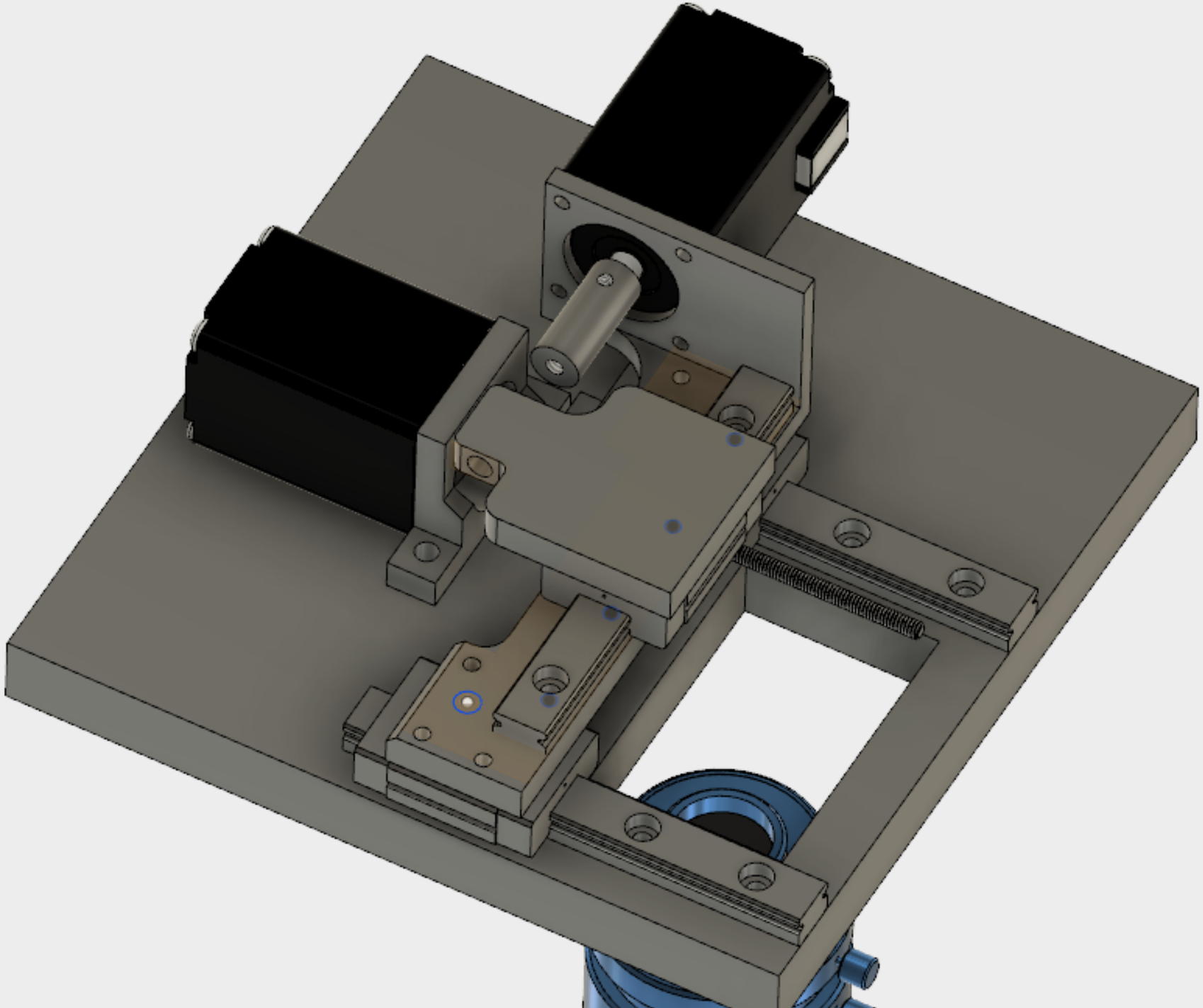

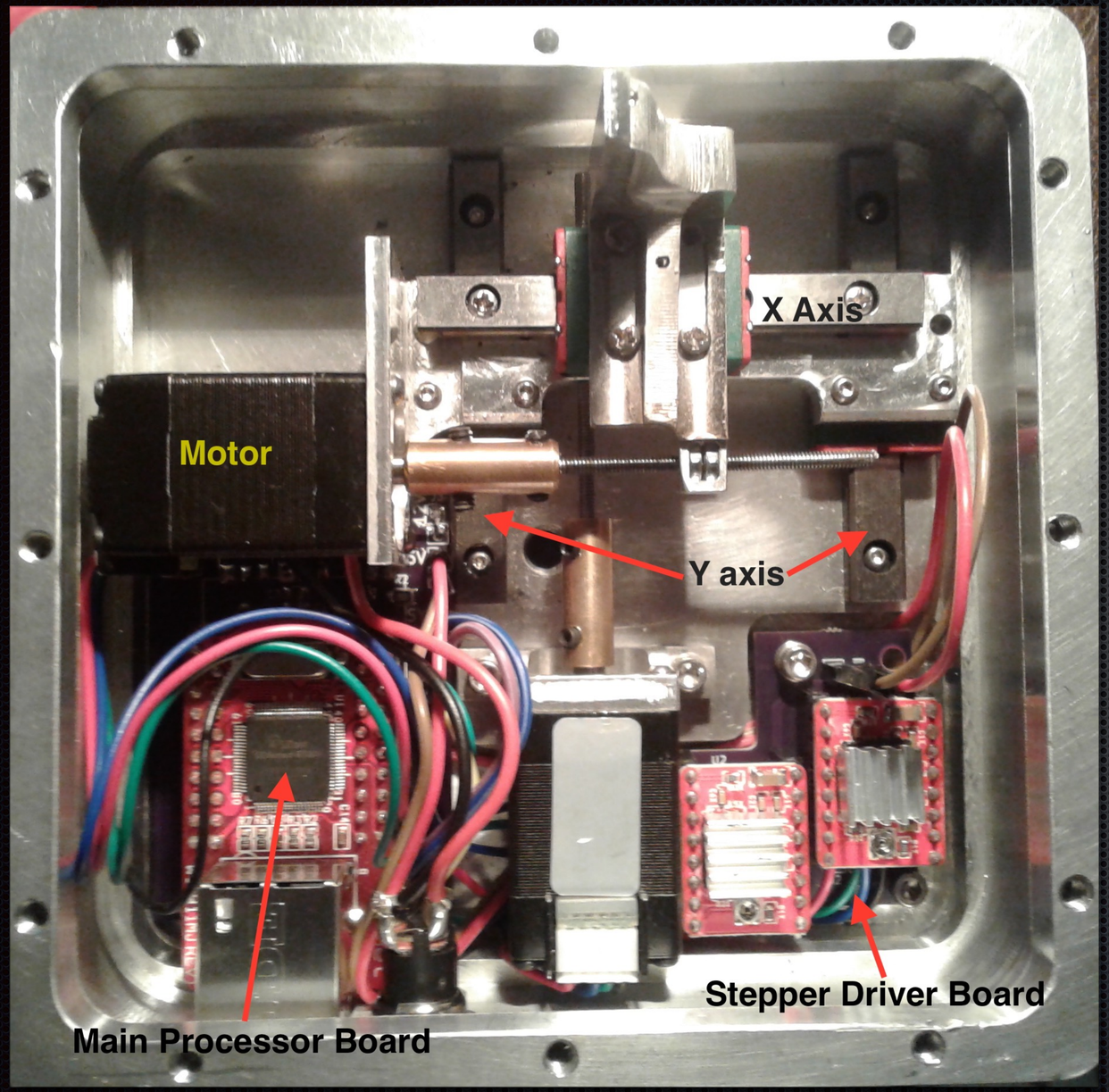
X Axis
Motor
Y axis
Stepper Driver Board
Main Processor Board

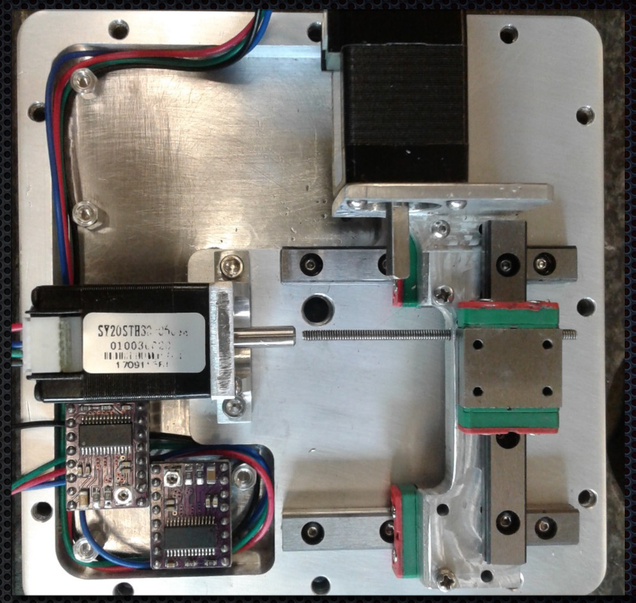

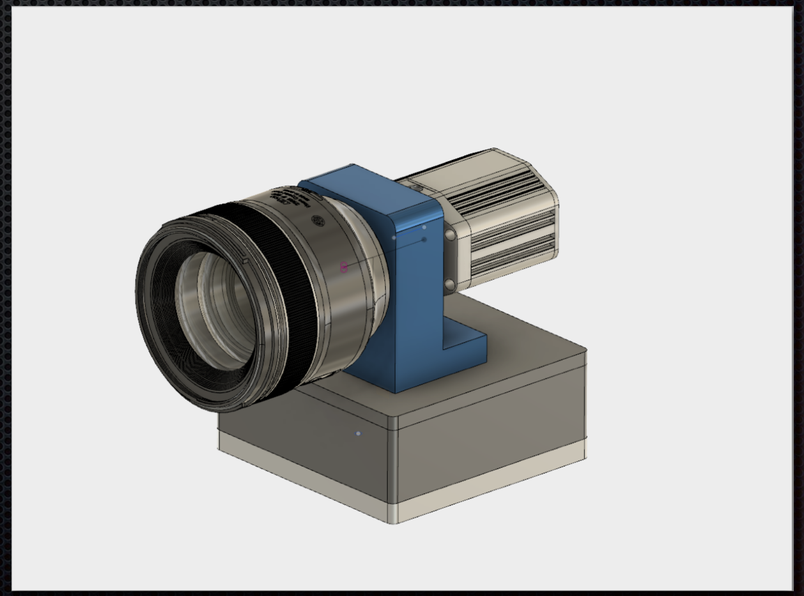

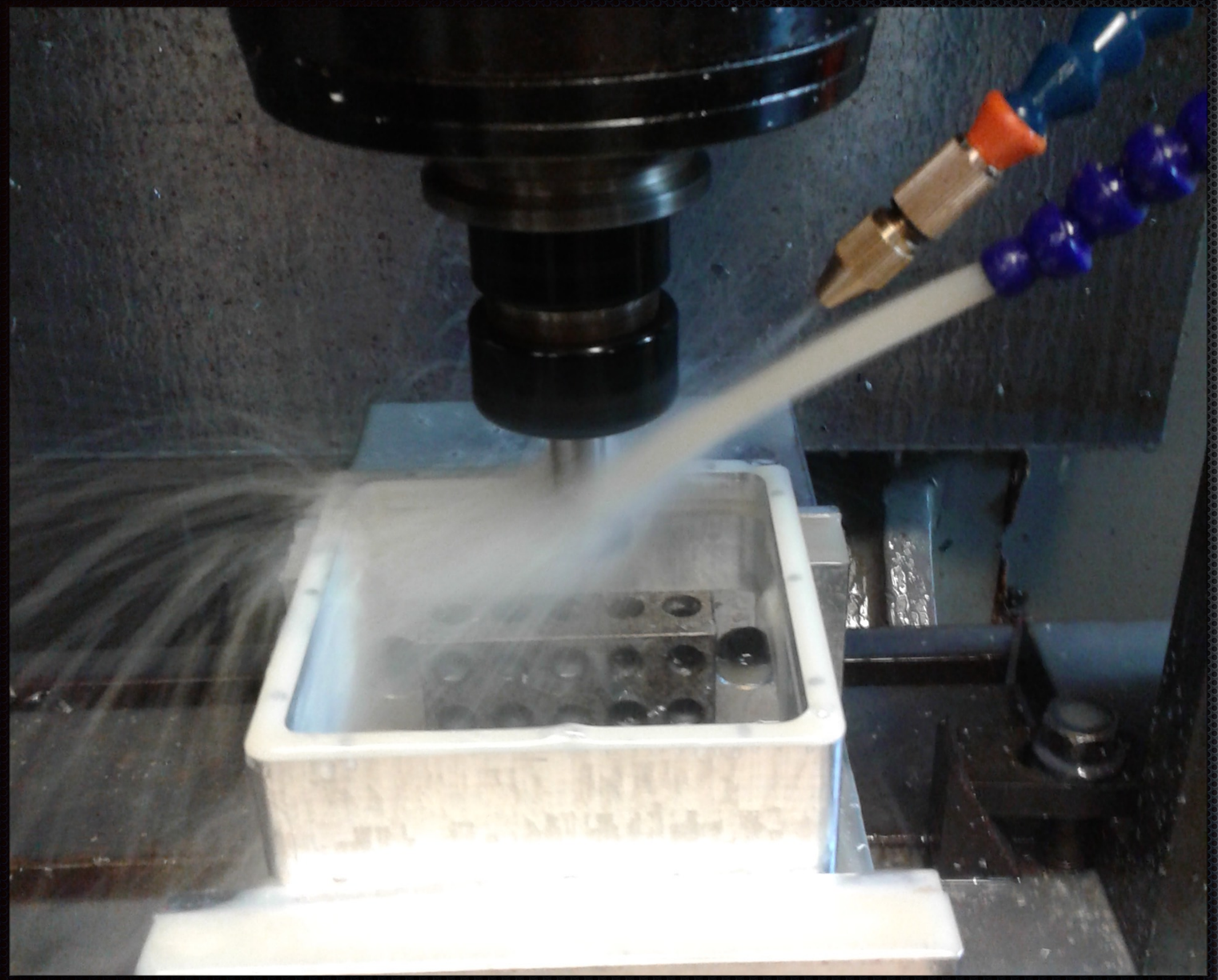

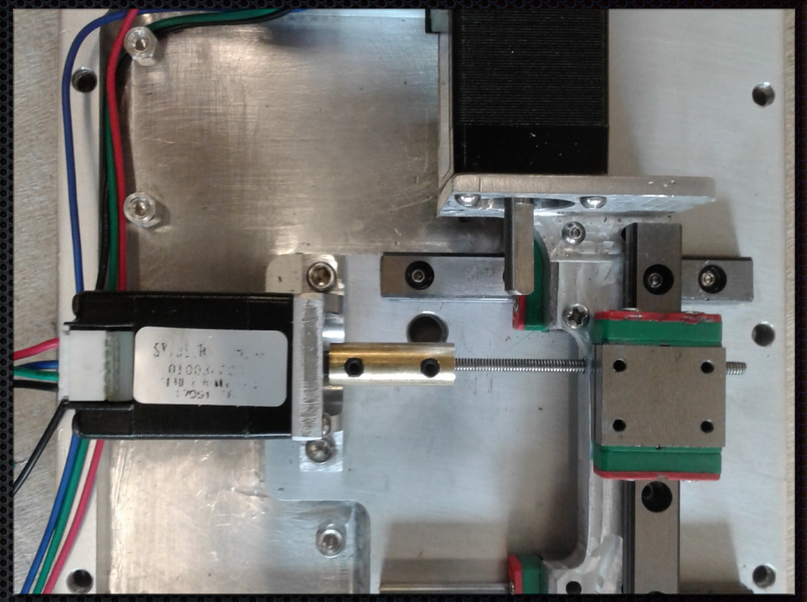

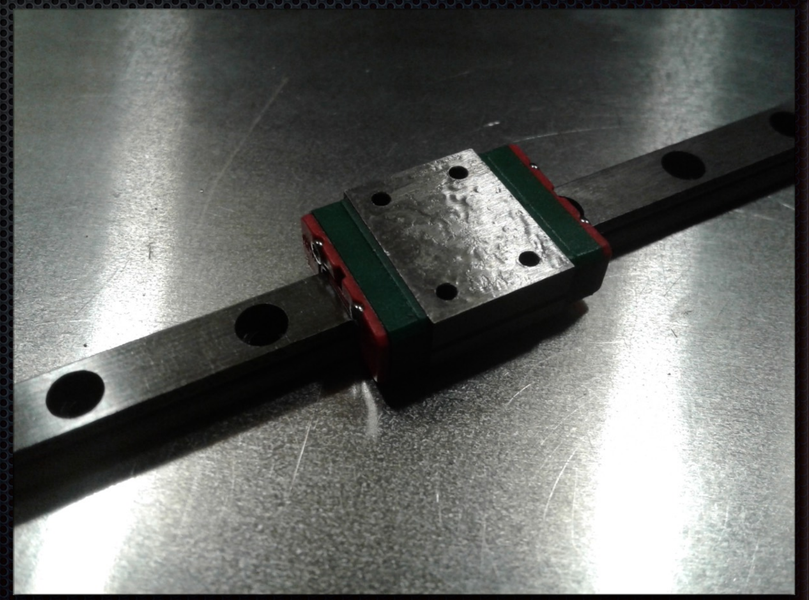

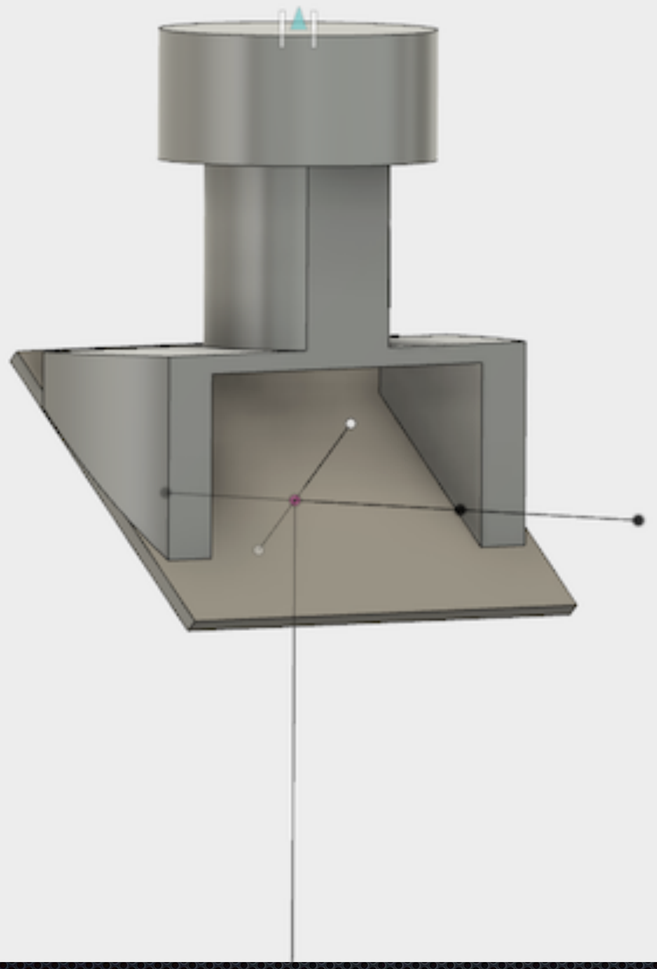

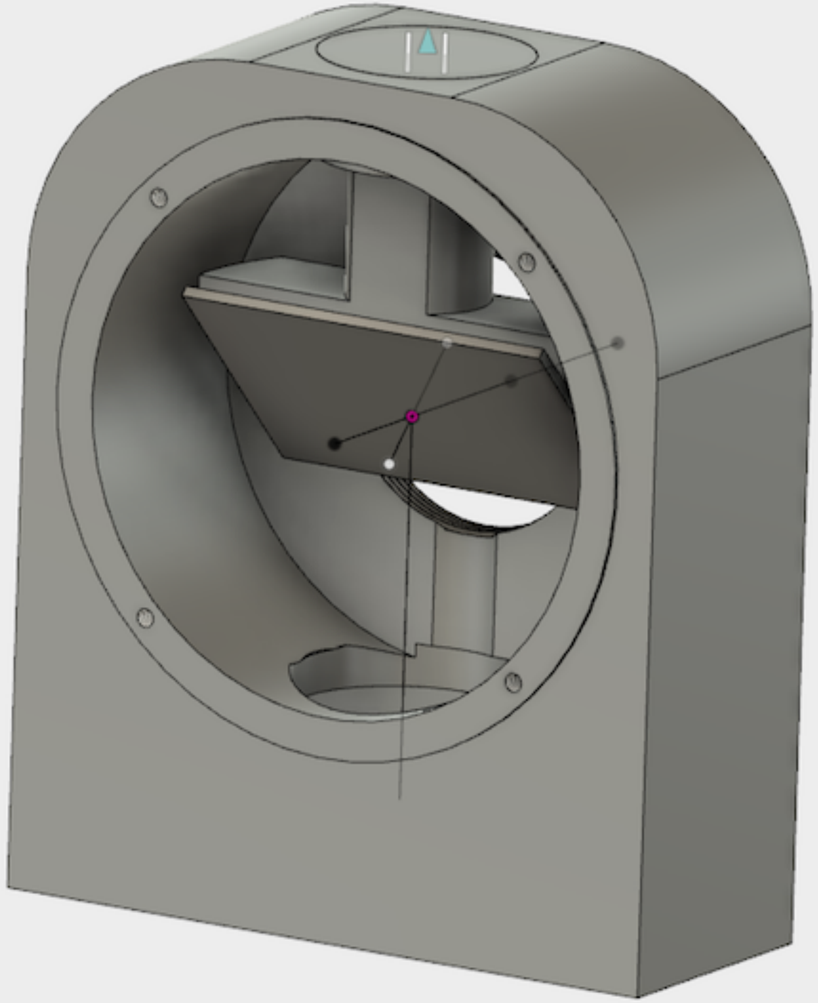

Final Device

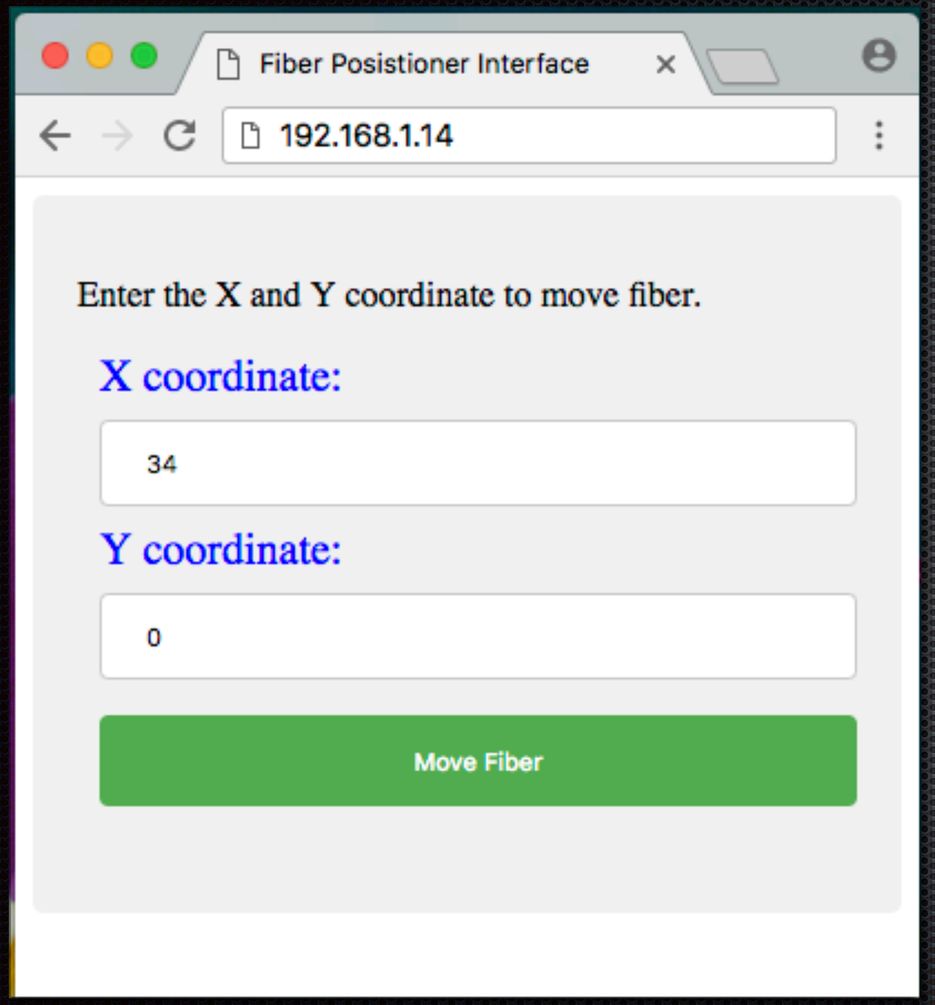

“Pinger” Design

Impulse Hammer
For Testing Materials

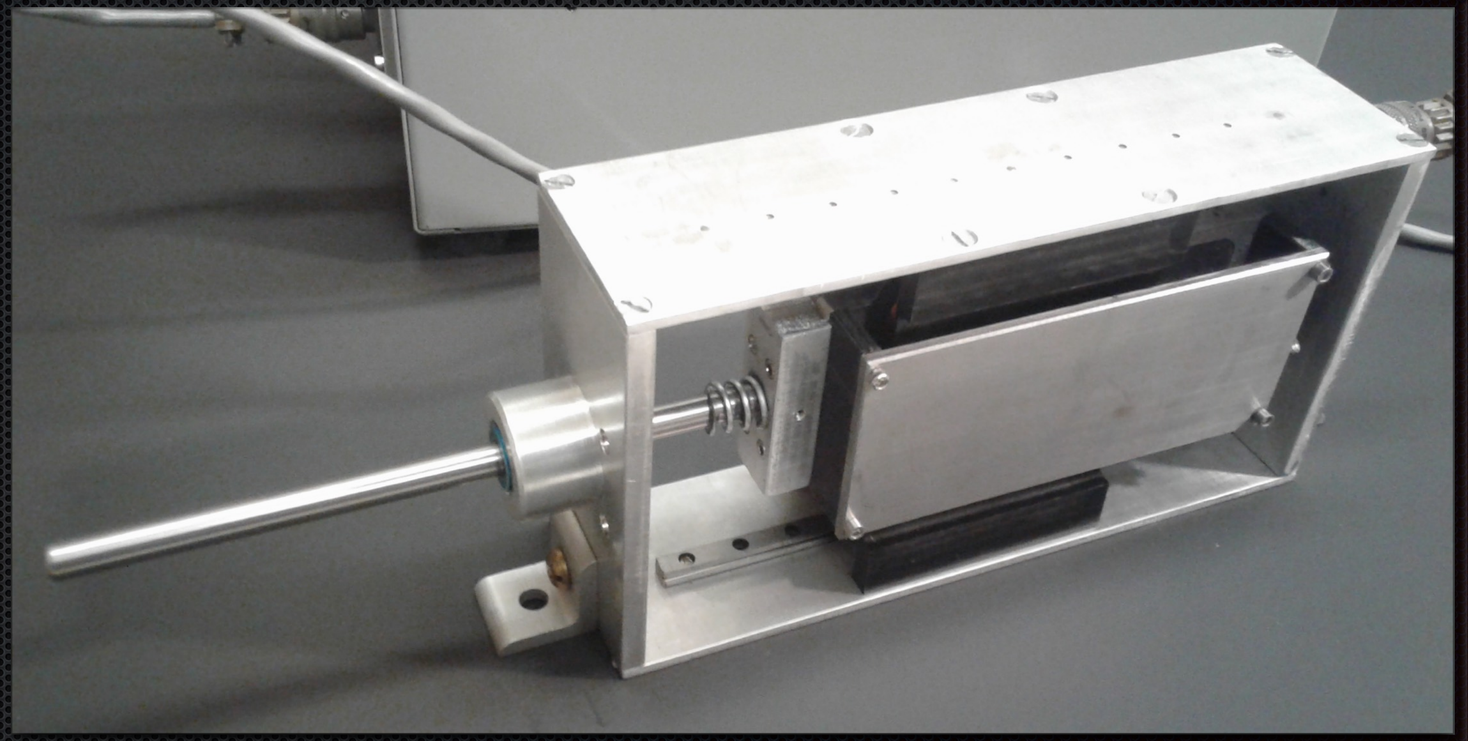

Why do we need a Pinger?

- To detect a vibration, we need to create one first!

2 Ways:

- Vibrate the Surface
- Create an Impulse

Surface Rebound Issues

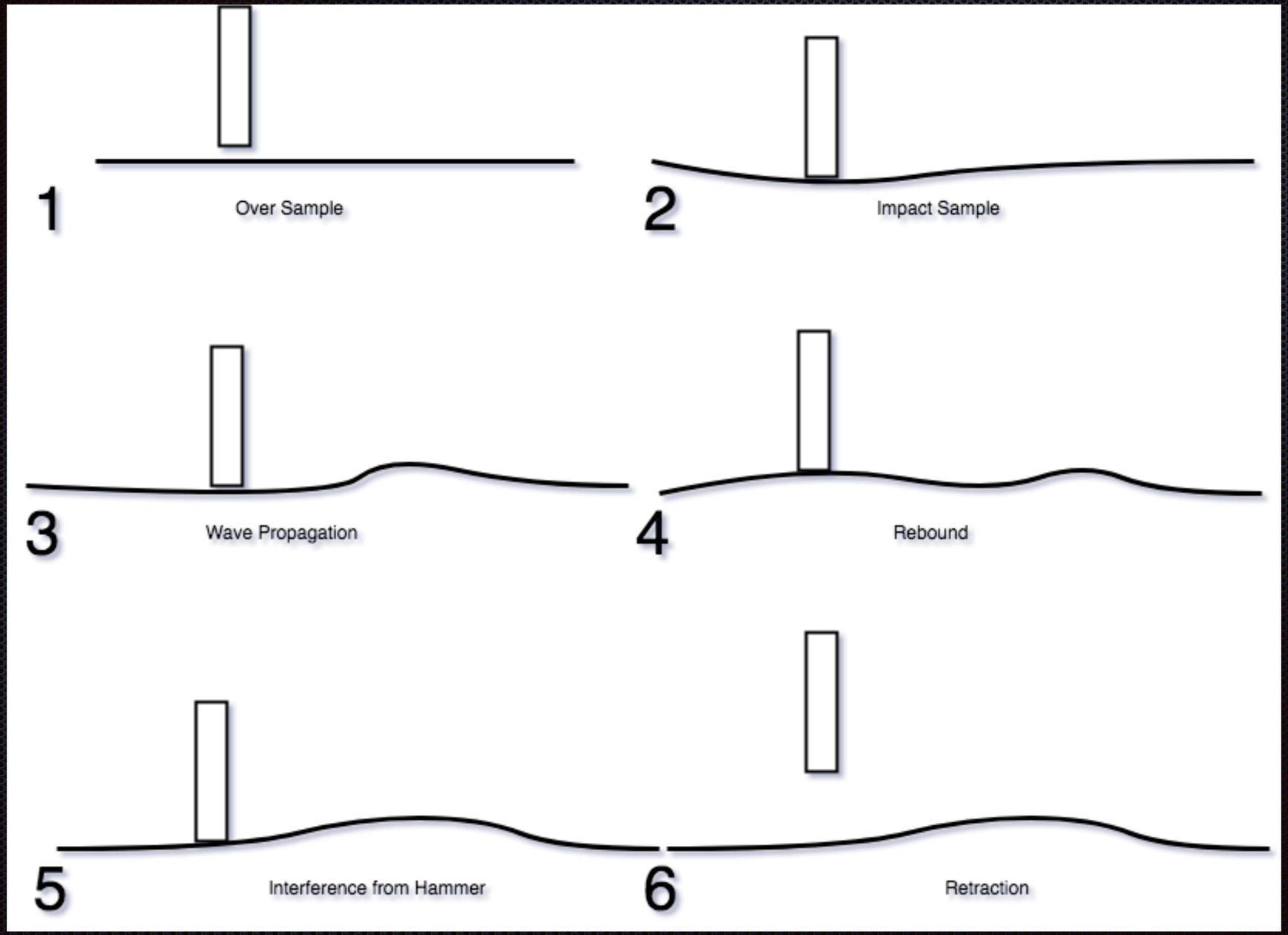

Pinger Solenoid Design

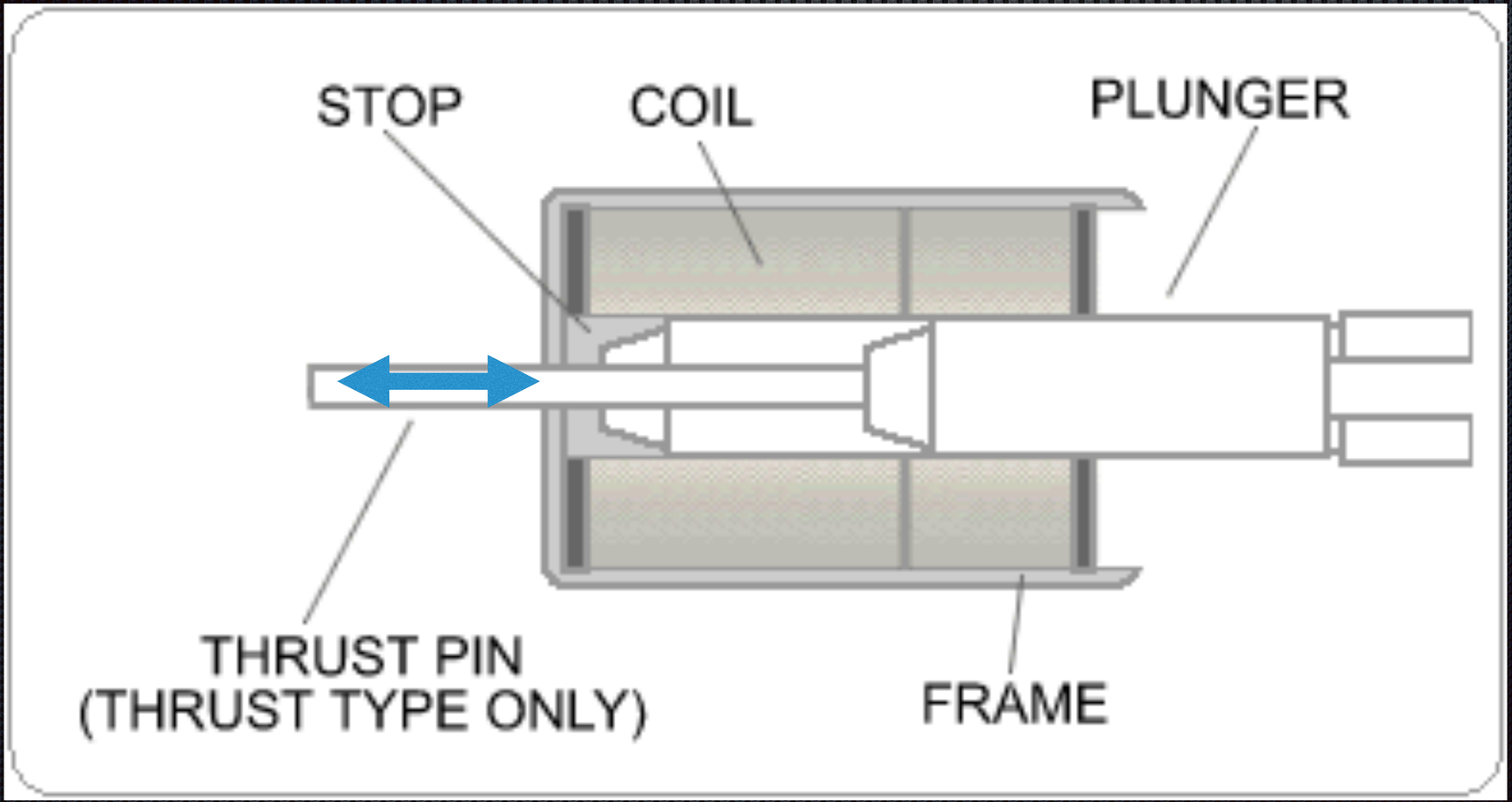

Pinger Design

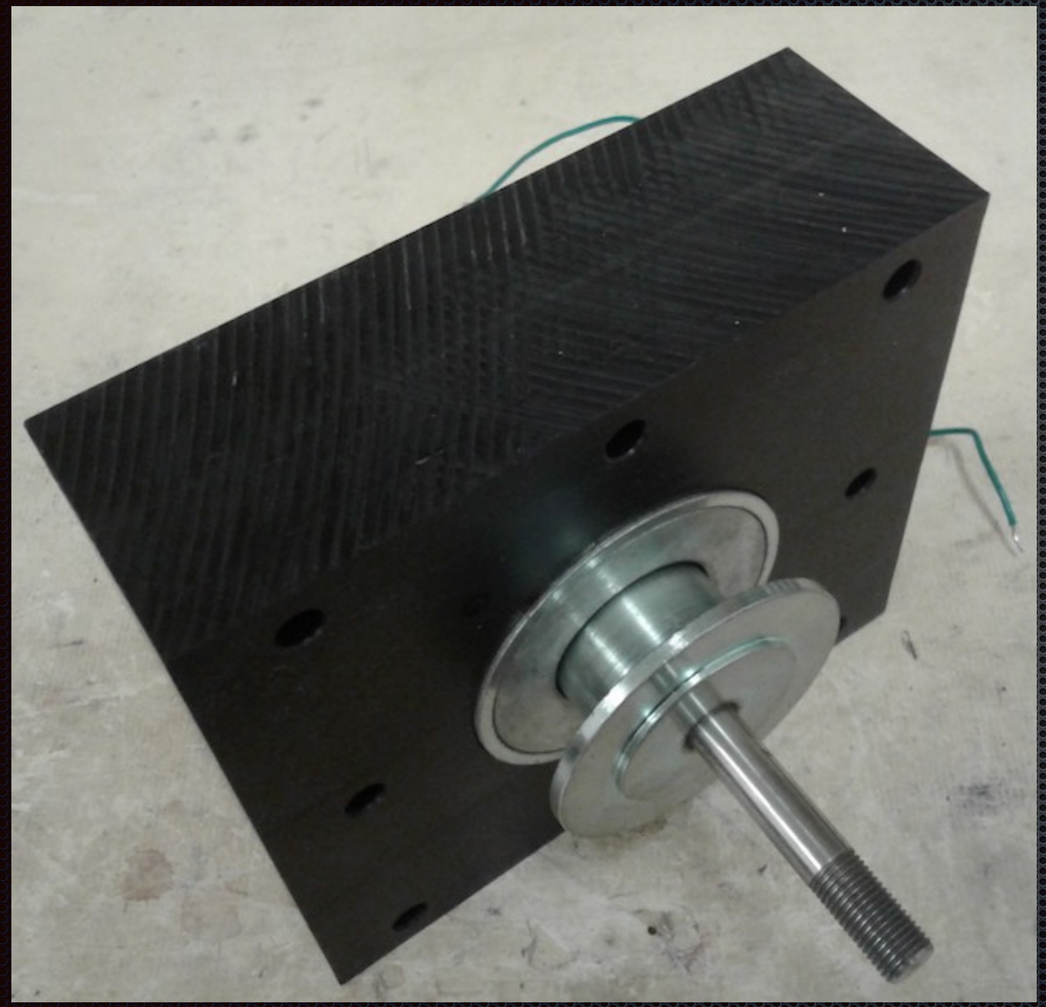

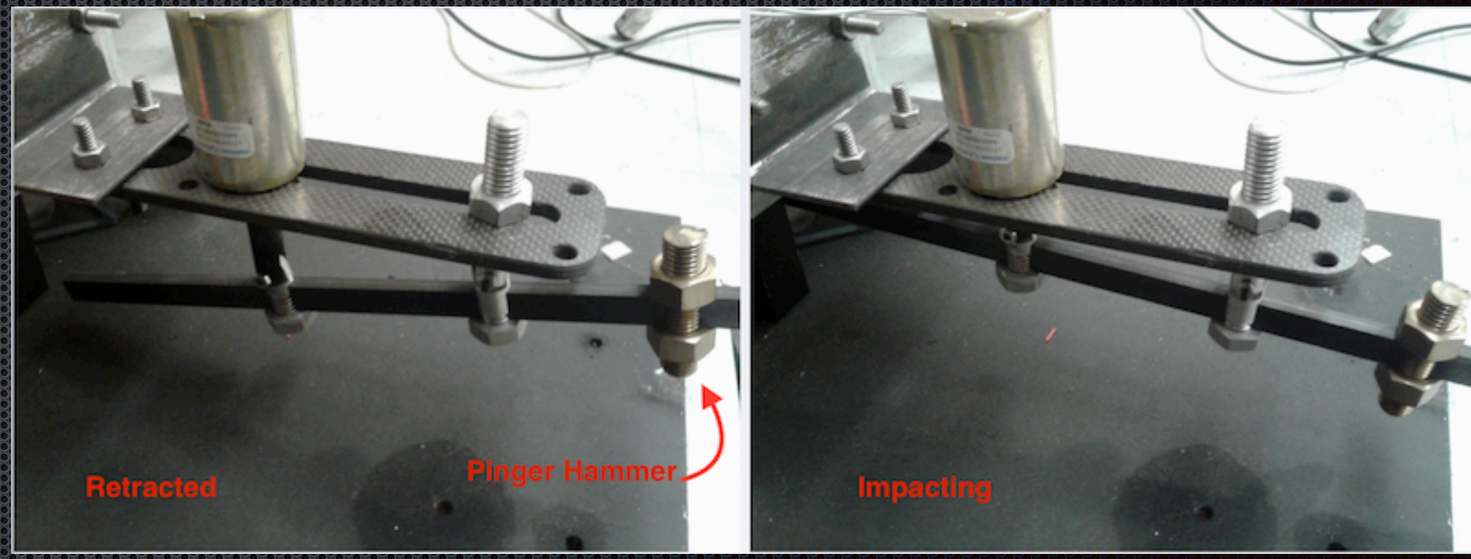

Cylinder Design

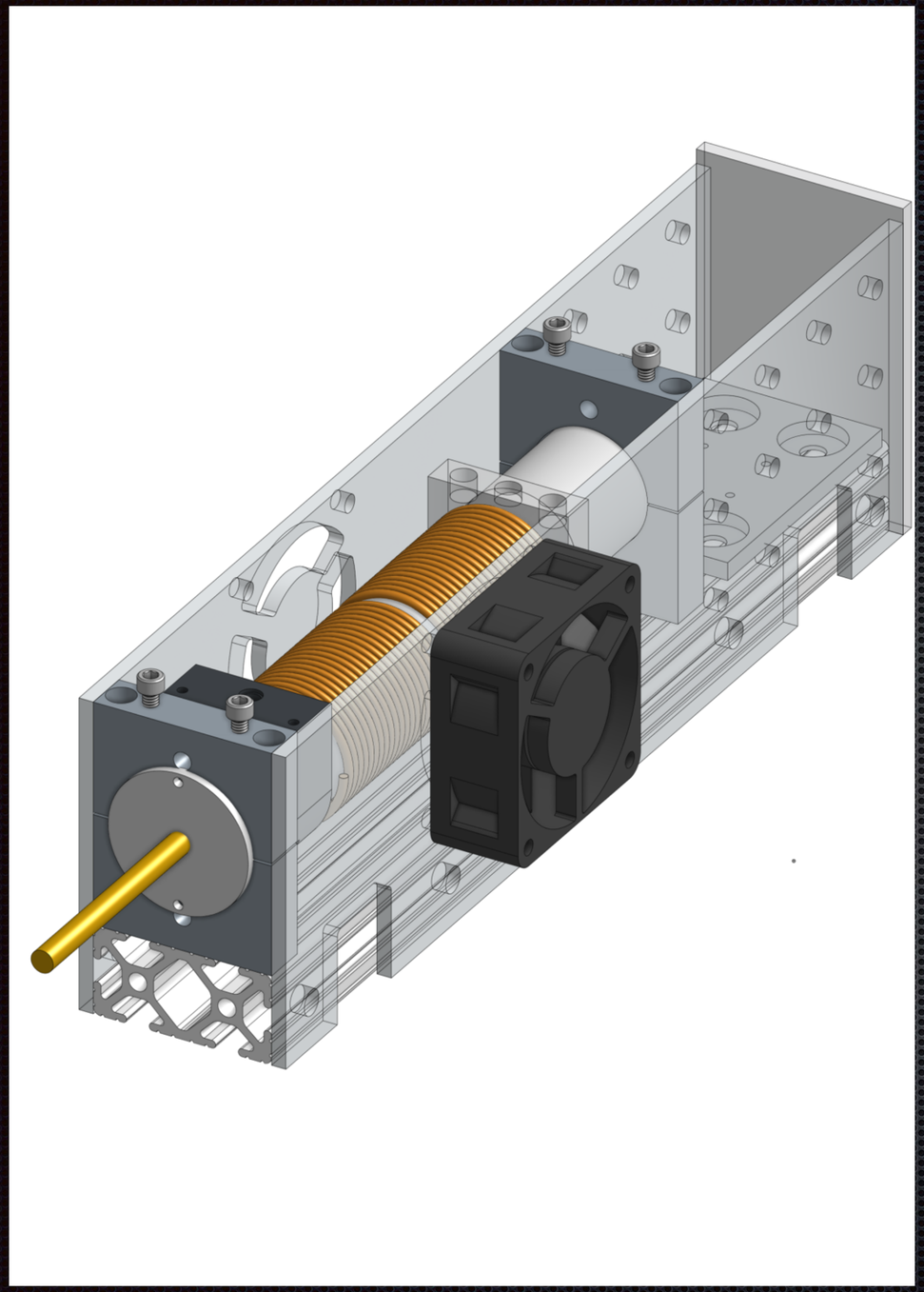

Cylinder Design

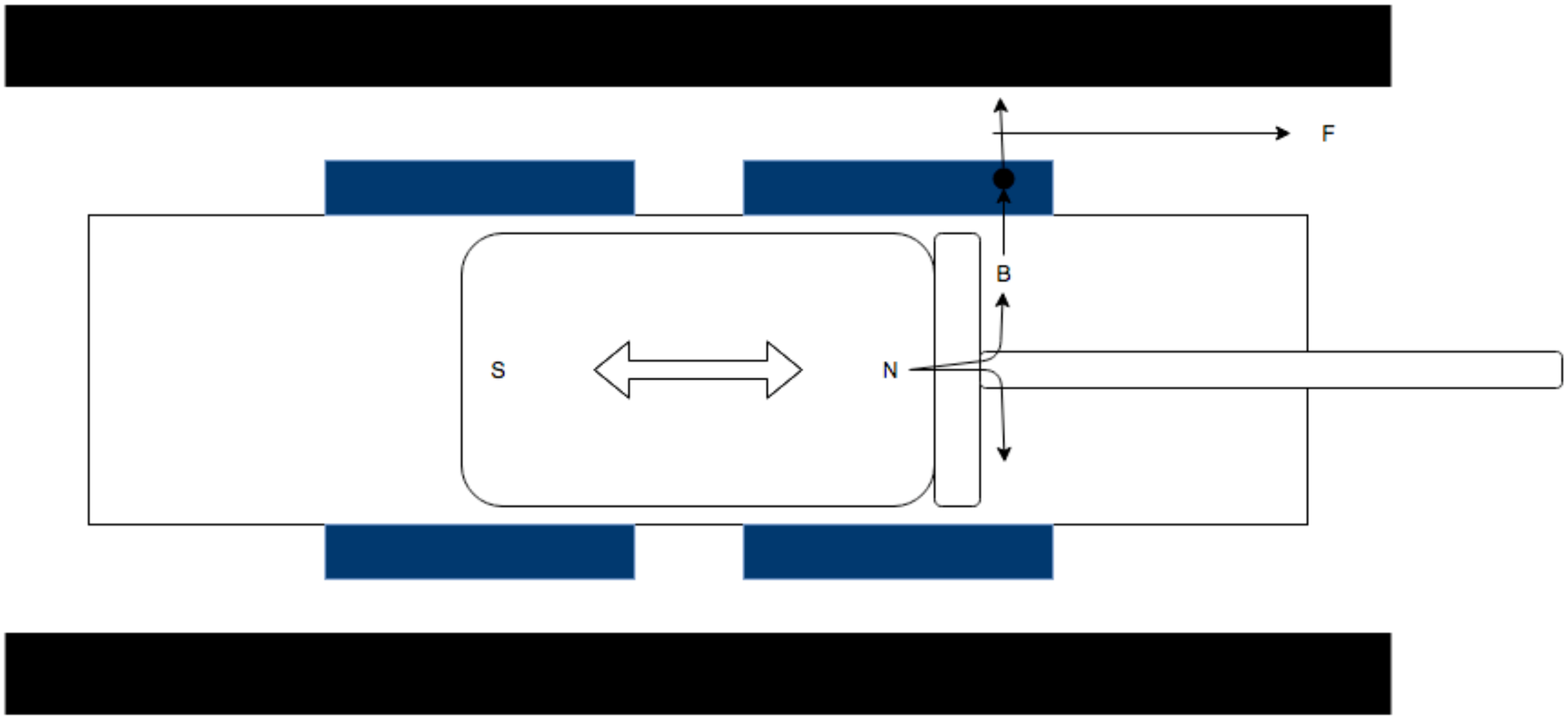

Cylinder Design Issues

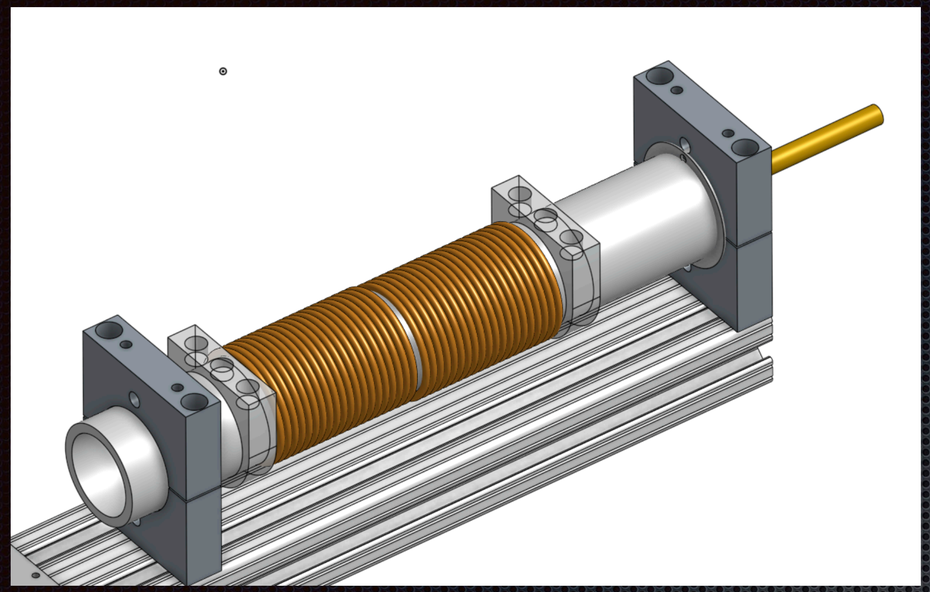

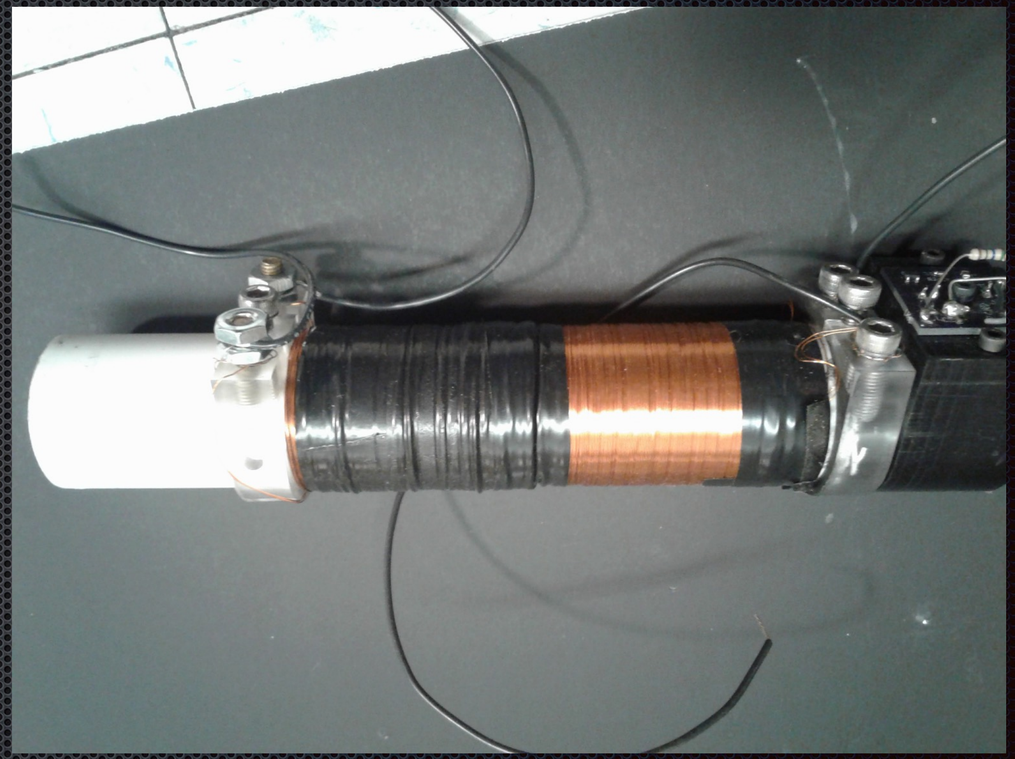

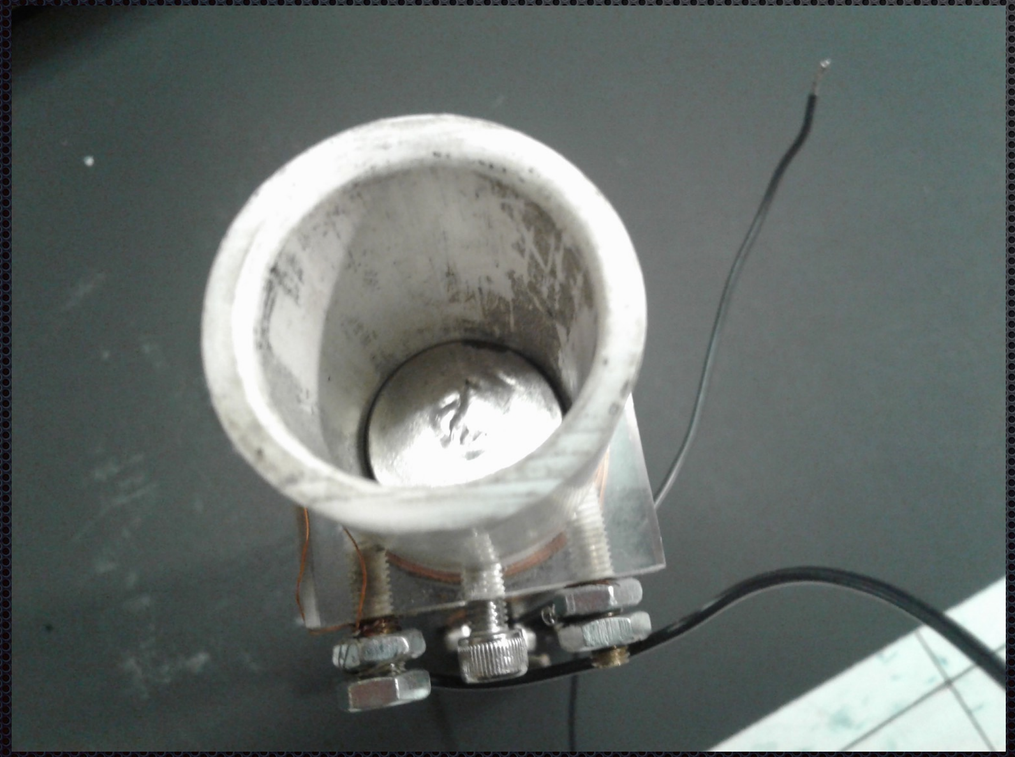

ReDesign!

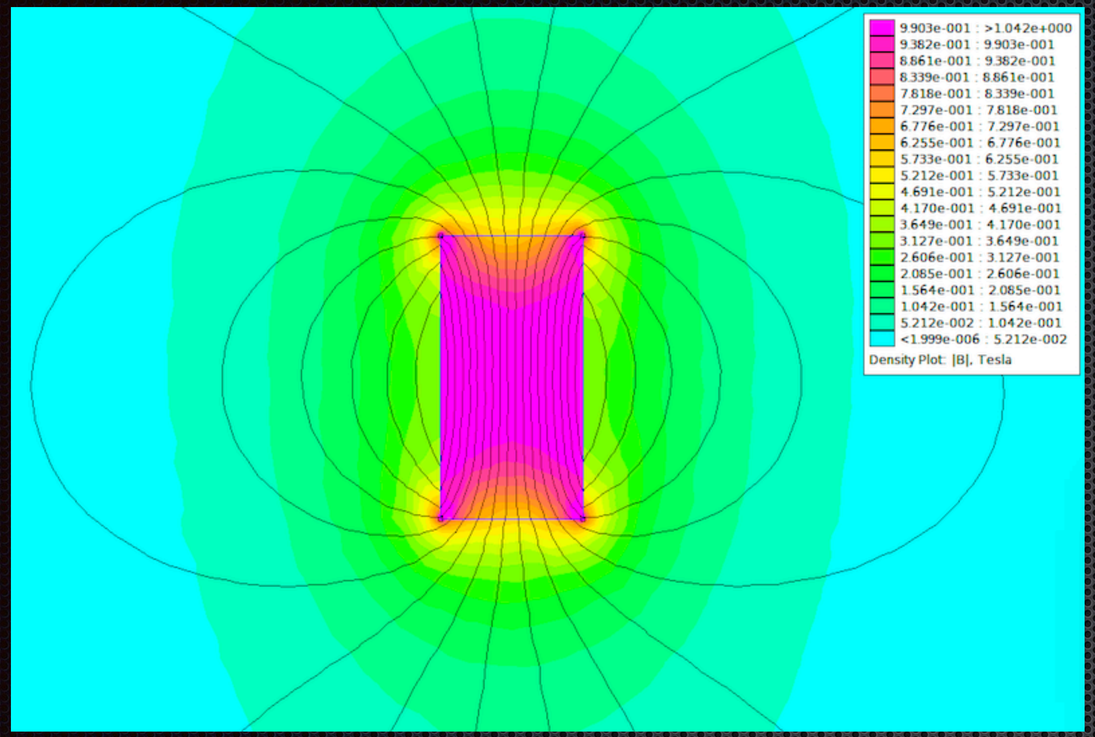

Wasted Field Density

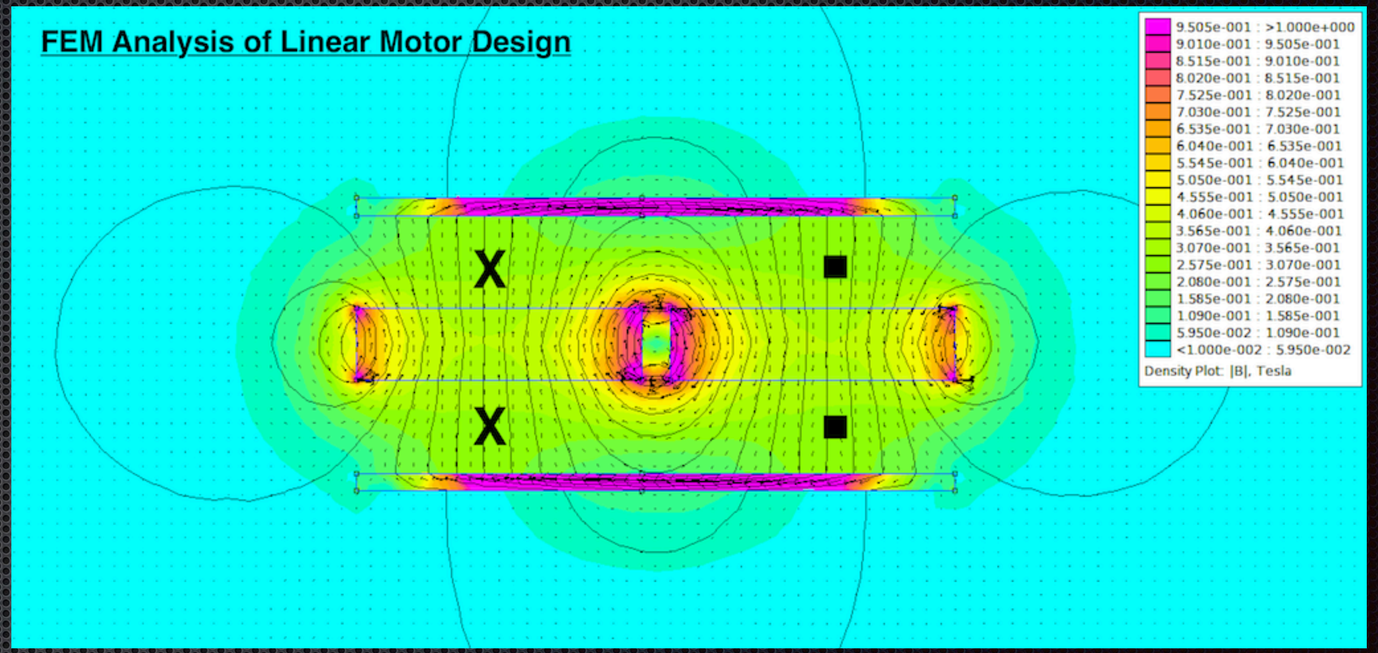

Contained Field!

Without Pole Piece

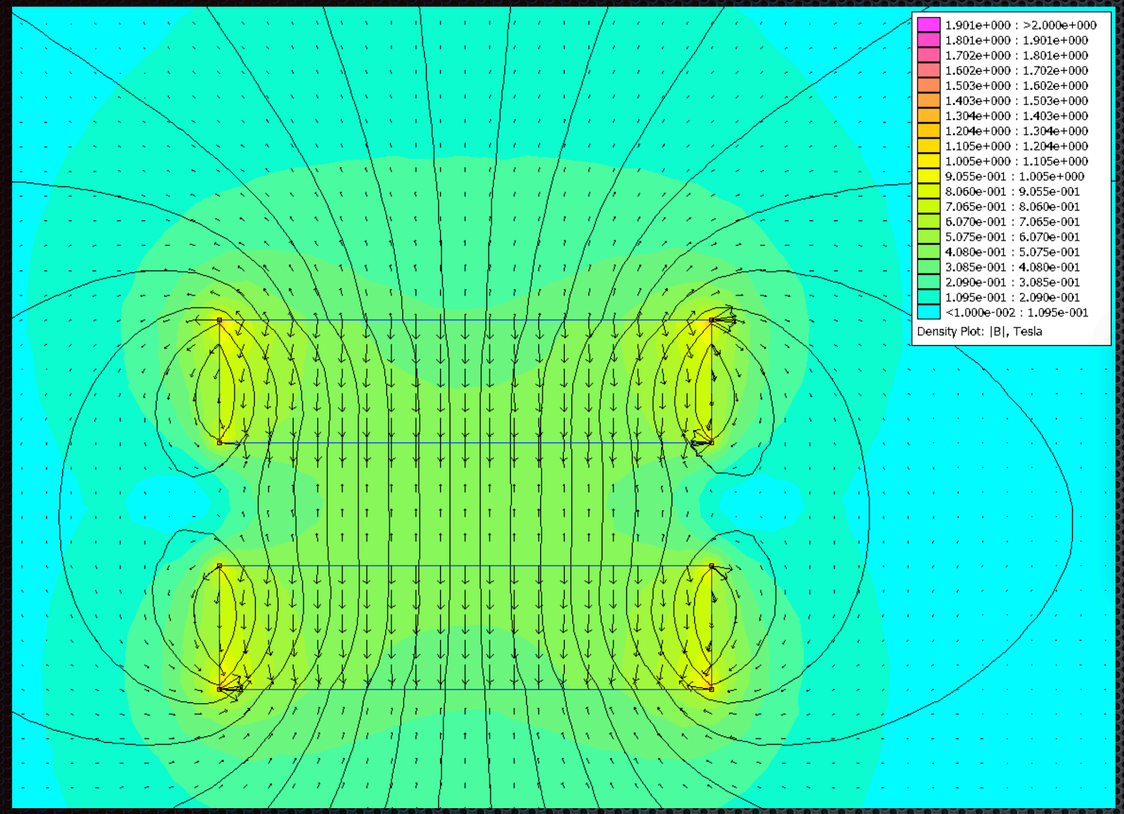

0.4T

With Pole Piece

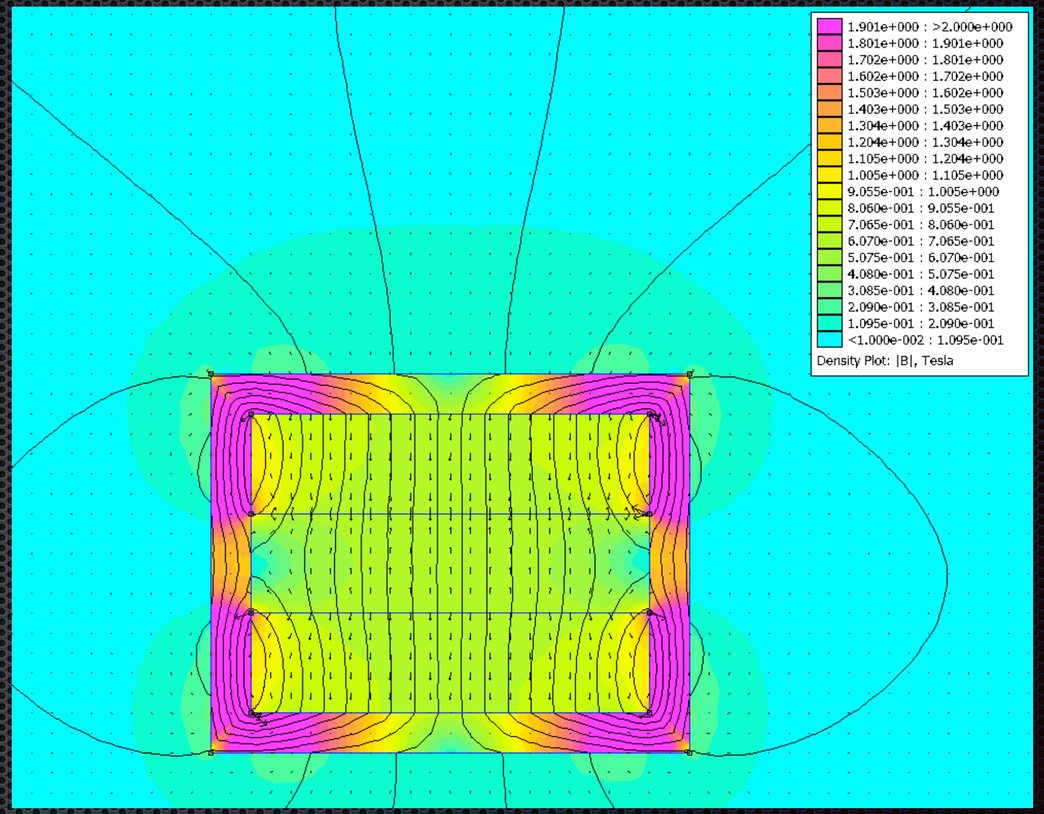

0.8T

FEM Analysis of Linear Motor Design

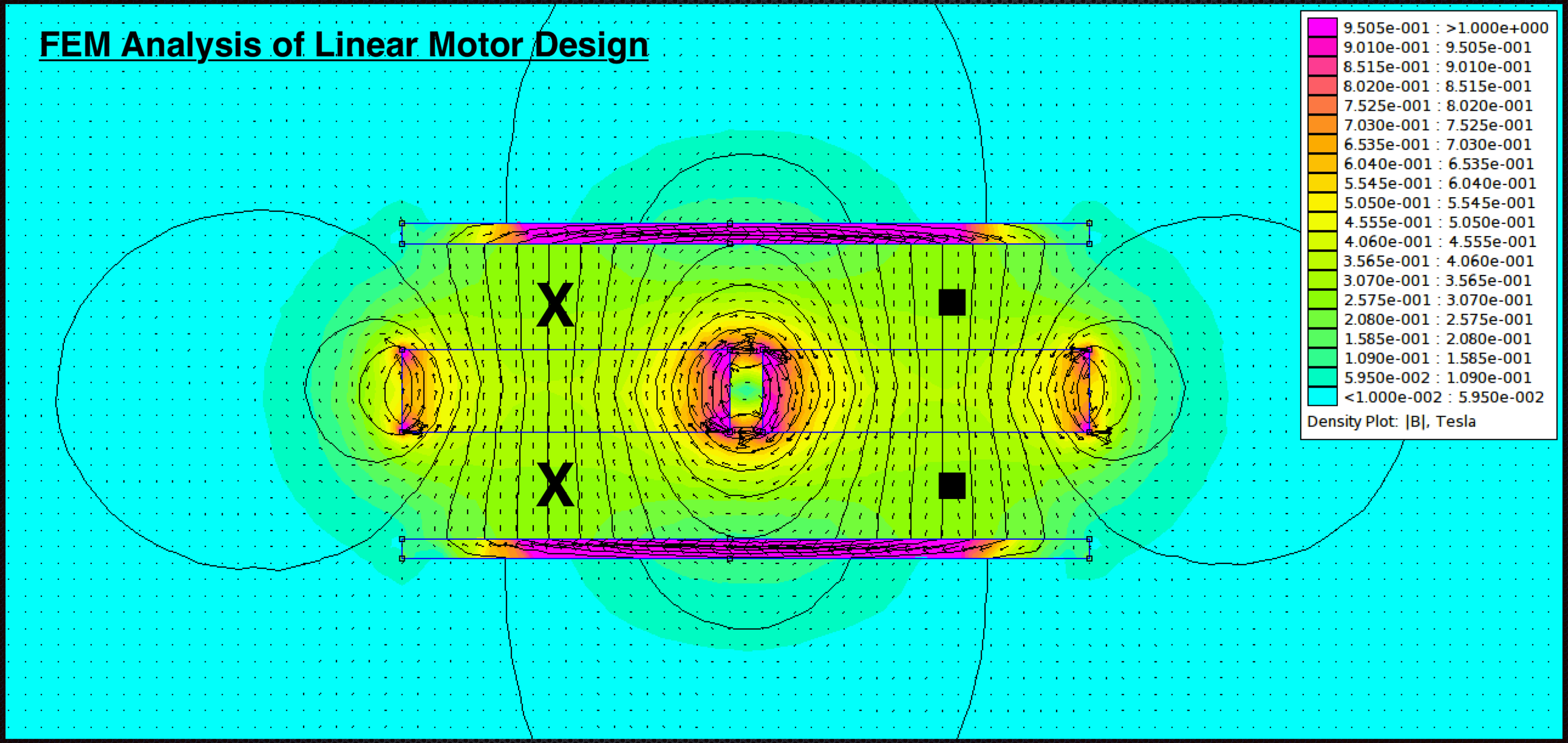

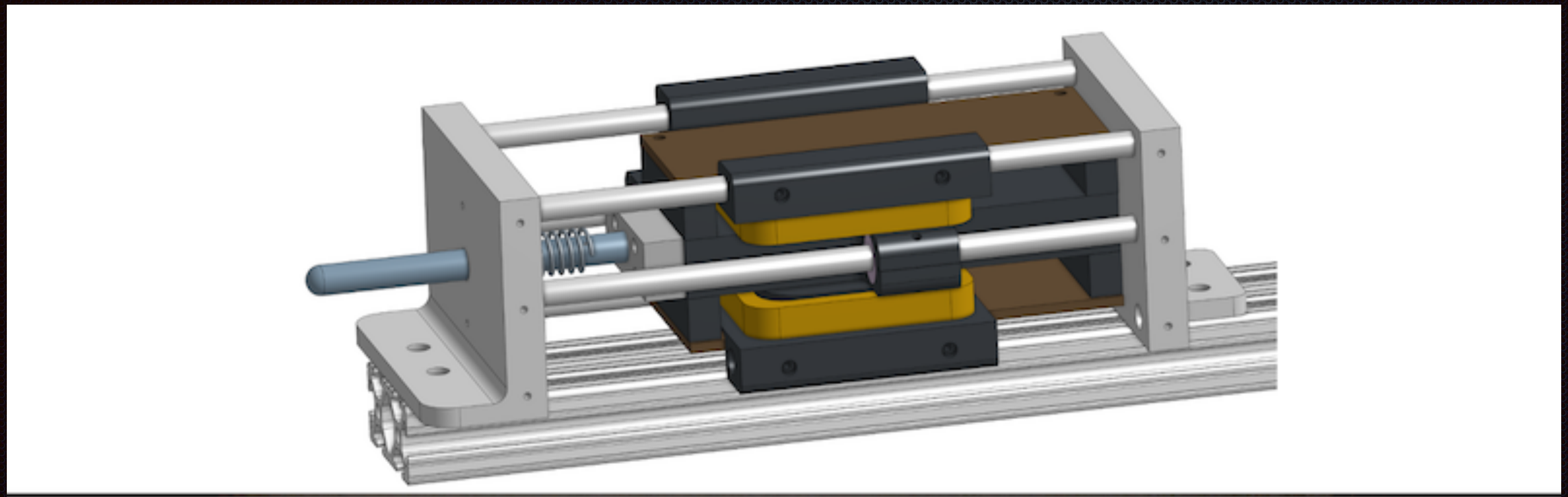

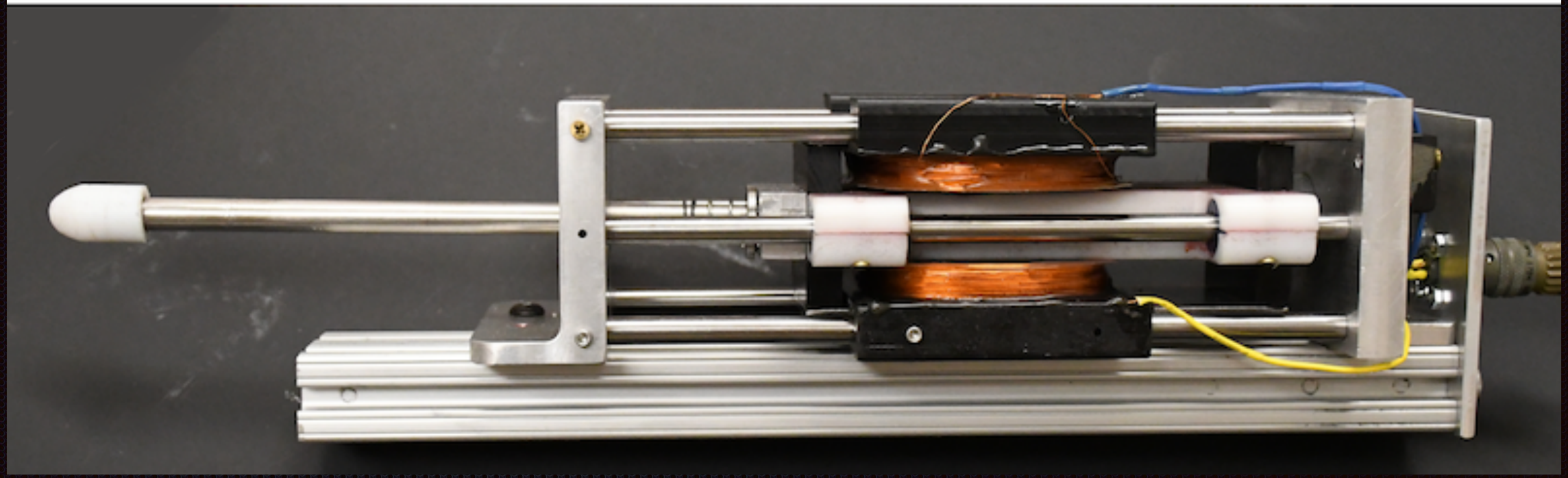

Electronics

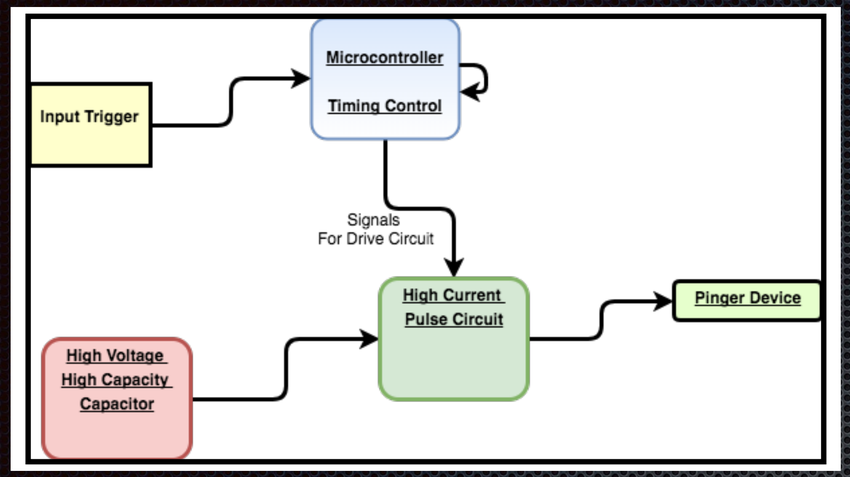

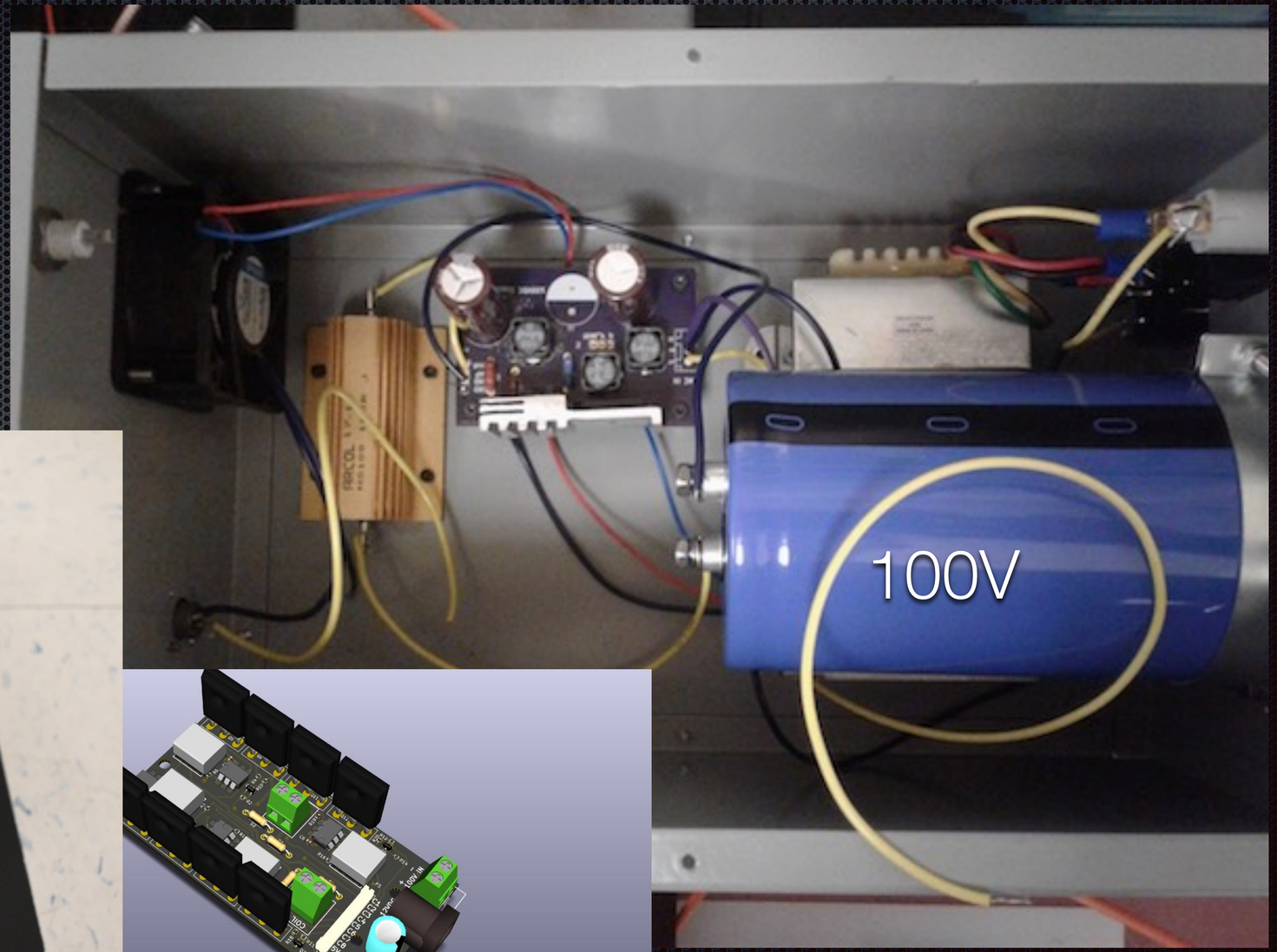

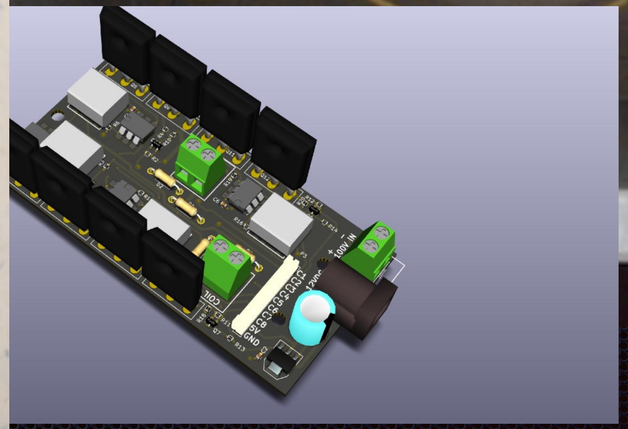

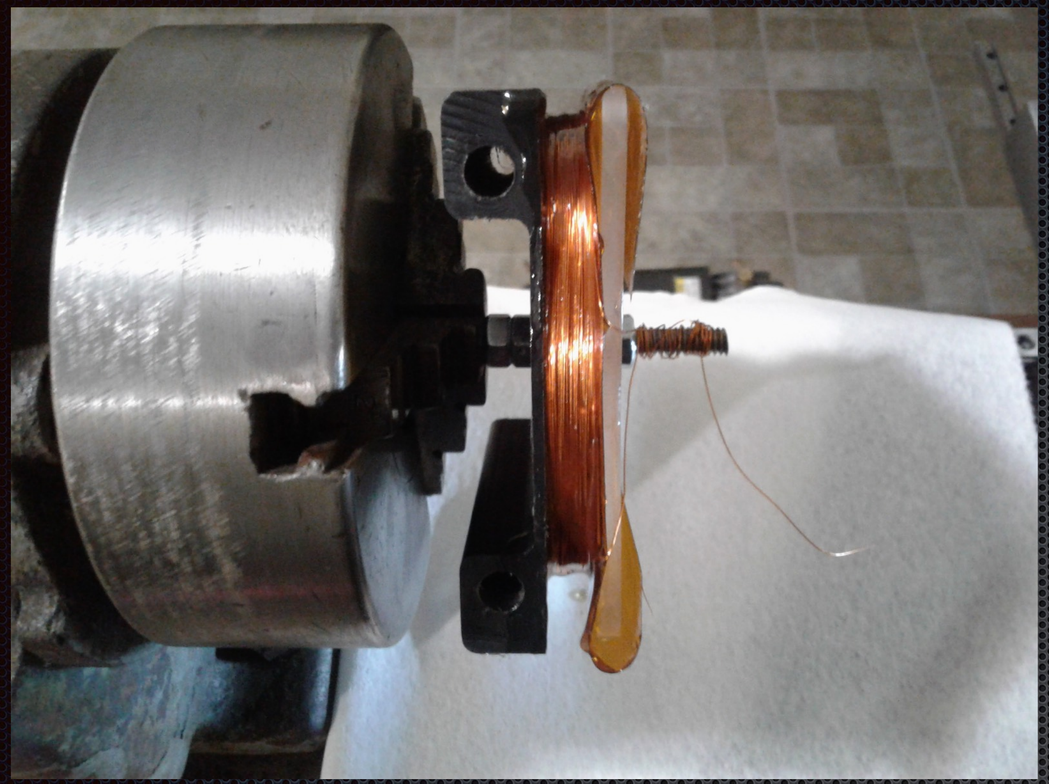

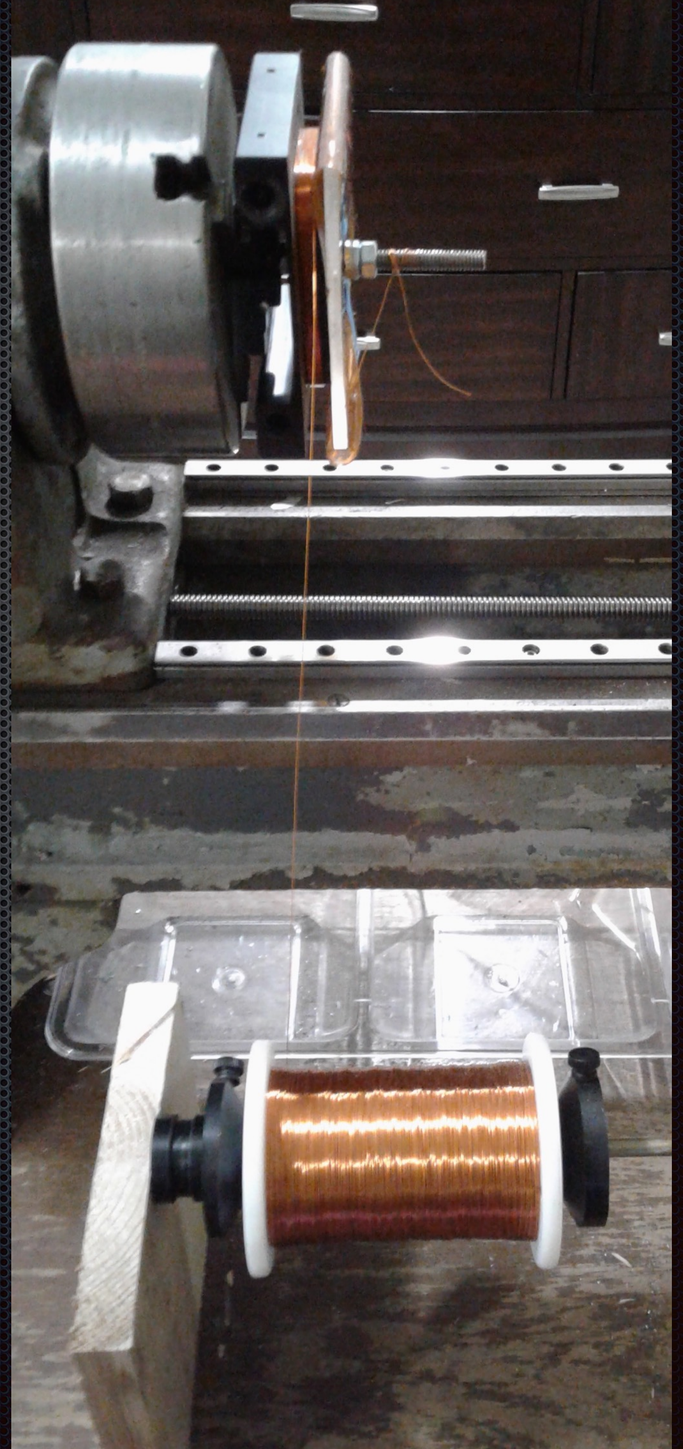

Coil Winding

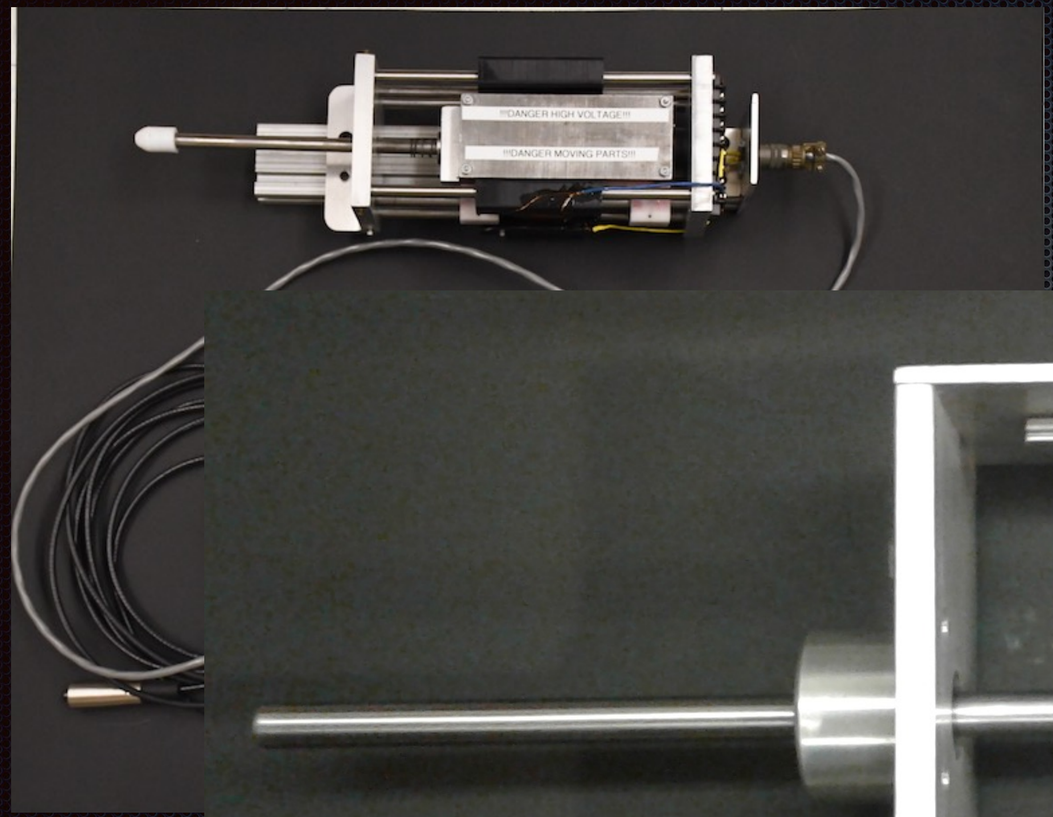
!!!DANGER HIGH VOLTAGE!!!
!!!DANGER MOVING PARTS!!!

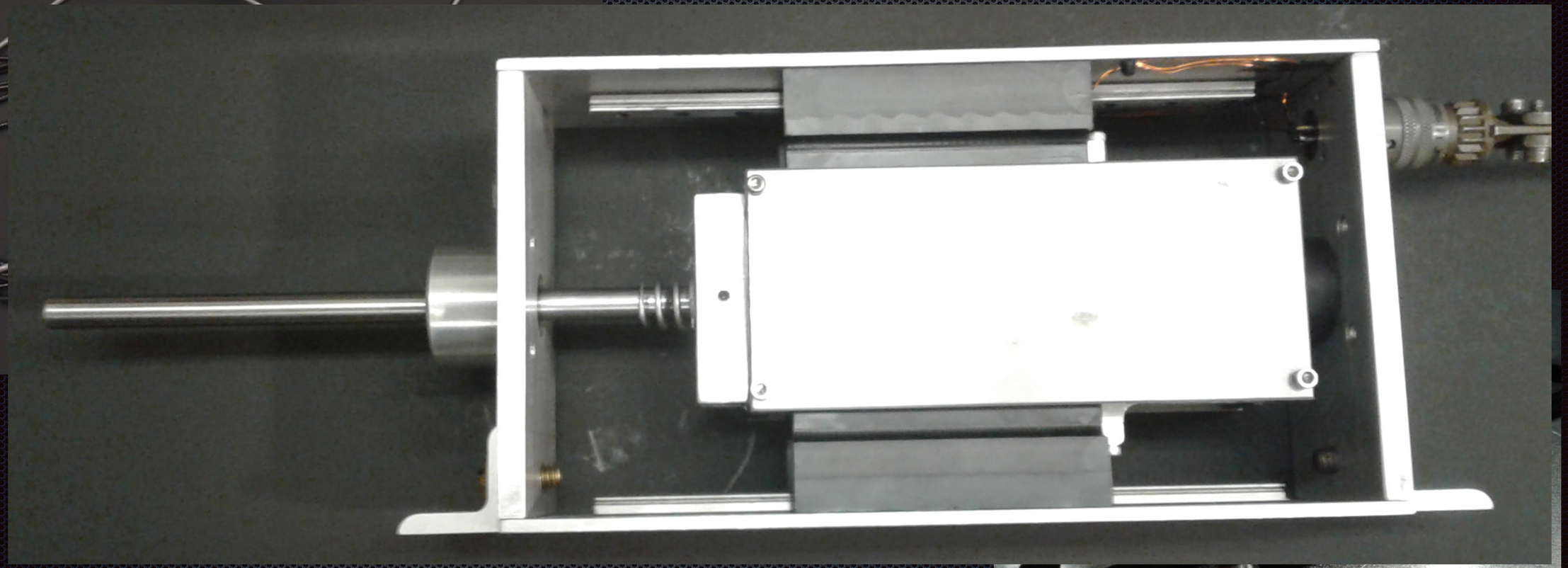

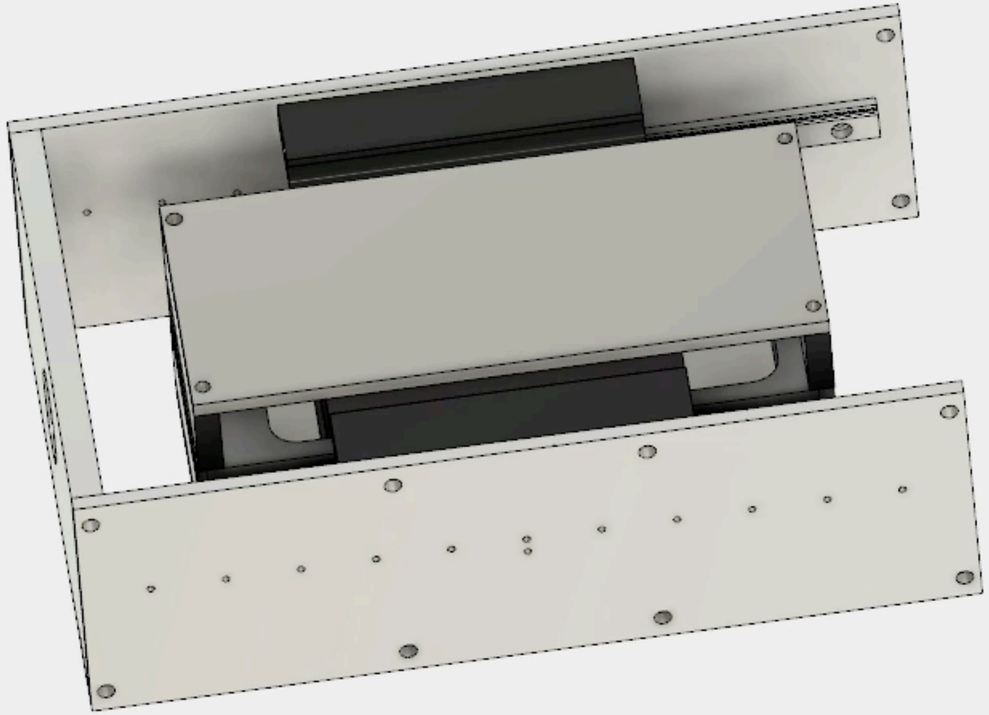

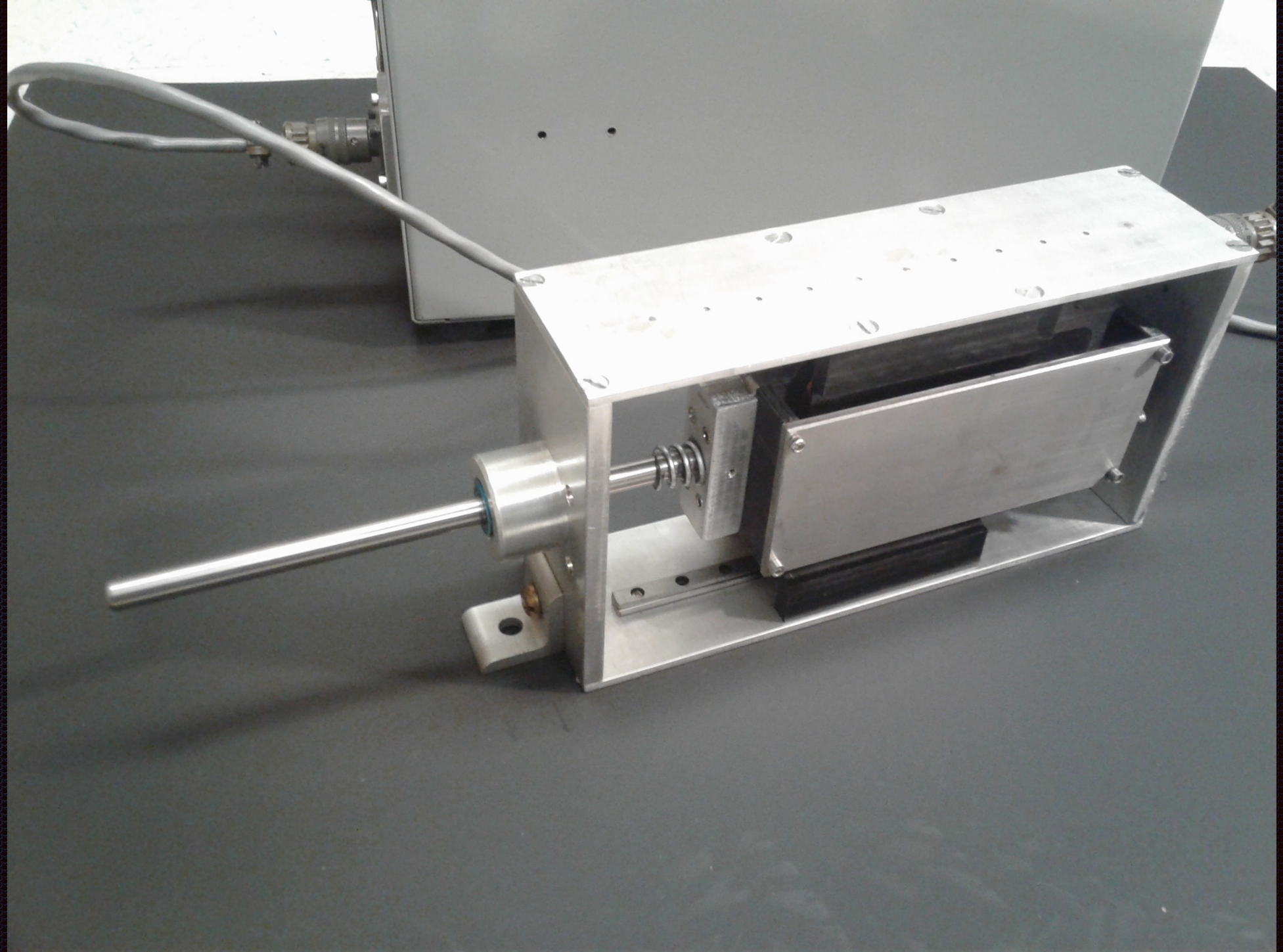

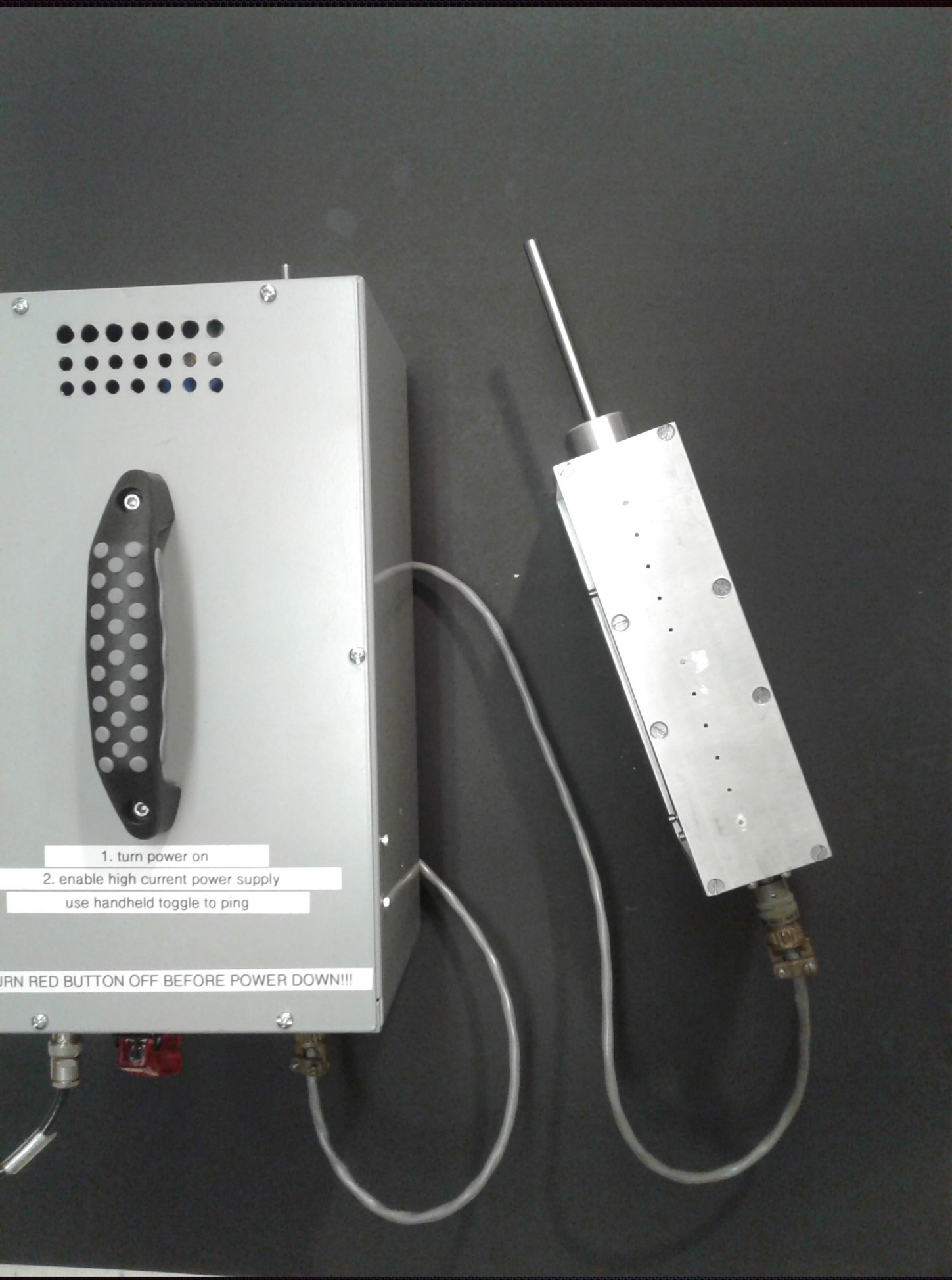
1. turn power on
2. enable high current power supply
use handheld toggle to ping
URN RED BUTTON OFF BEFORE POWER DOWN!!!

Conclusions

- Developed Fast Electro-Mechanical Impulse Device
- Final Design is Robust and Powerful
- The device was useful in materials analysis

Measurements

Data from tests

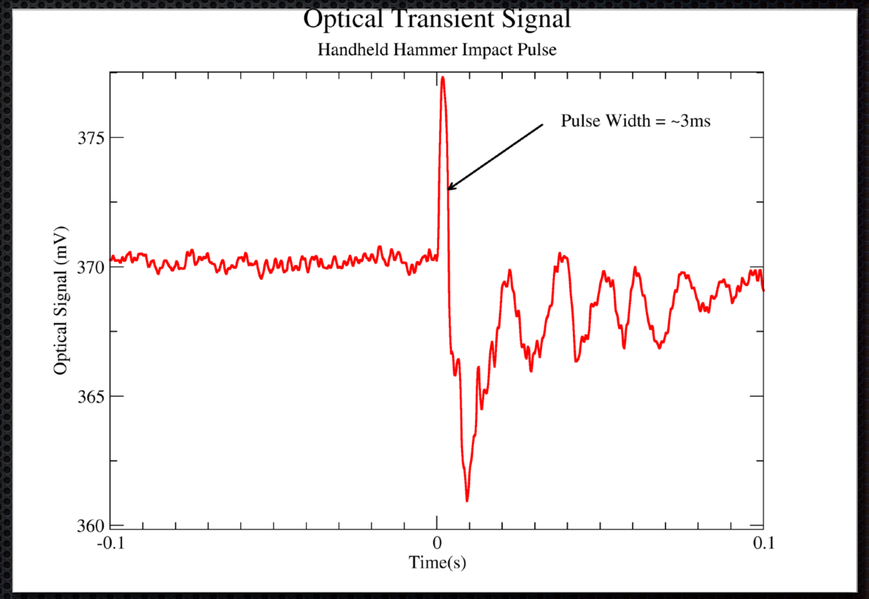

Audio Signal Reproduction

Fiber Sensor Focused on Snack Bag

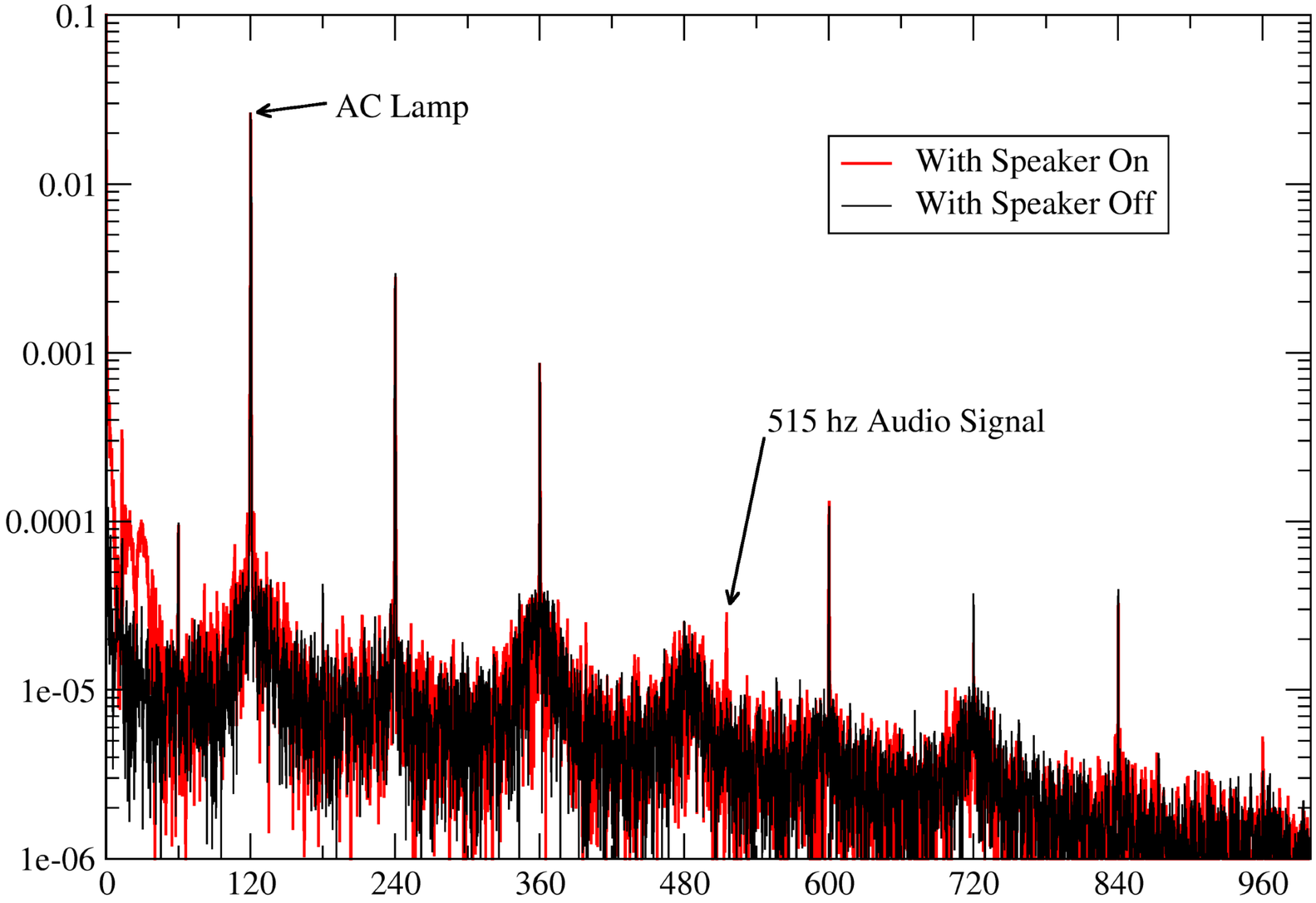

Seismic Wave Impulse Test

Foot Tapping on Floor

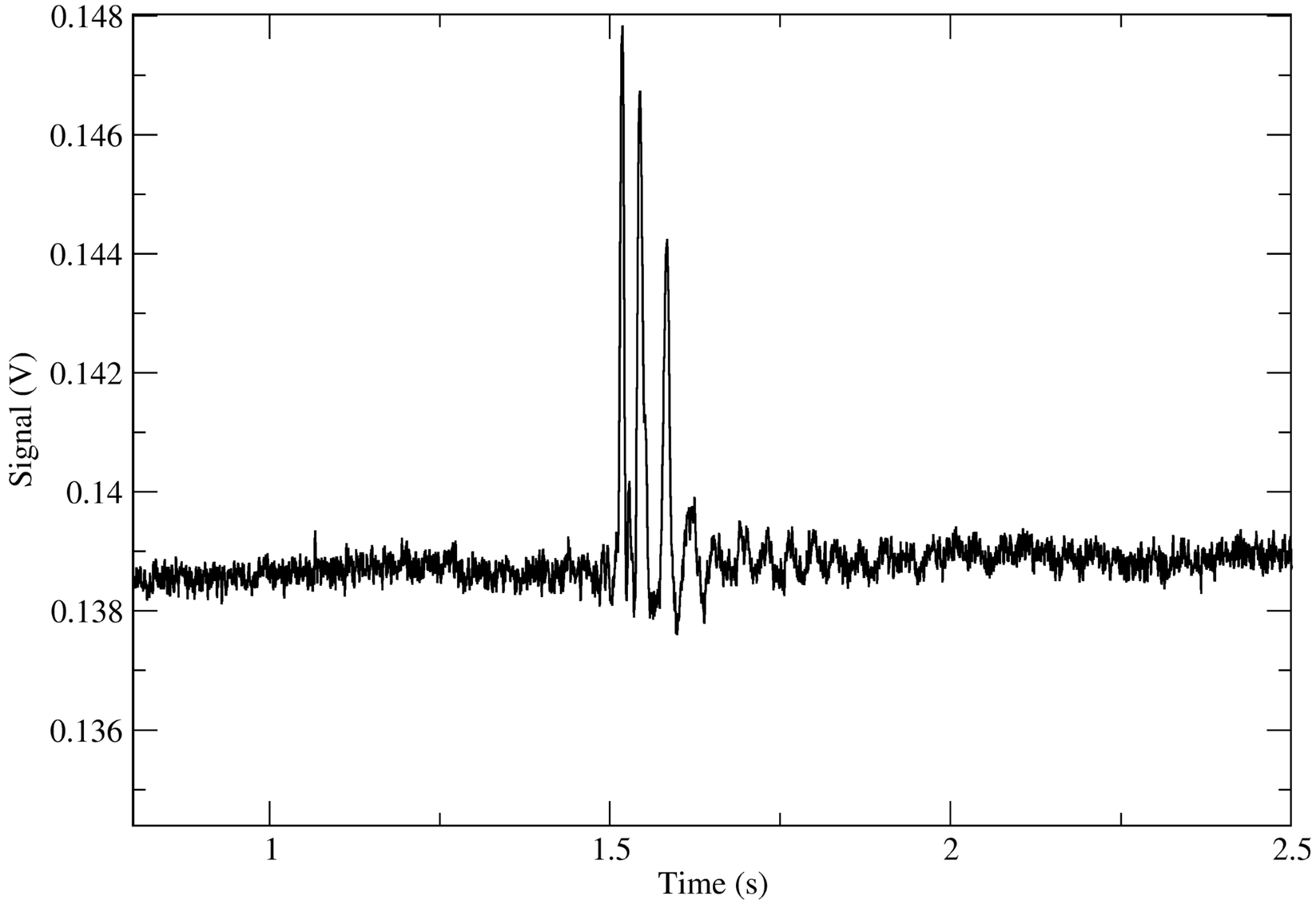

Sunny Concrete

Optical Signal and FFT

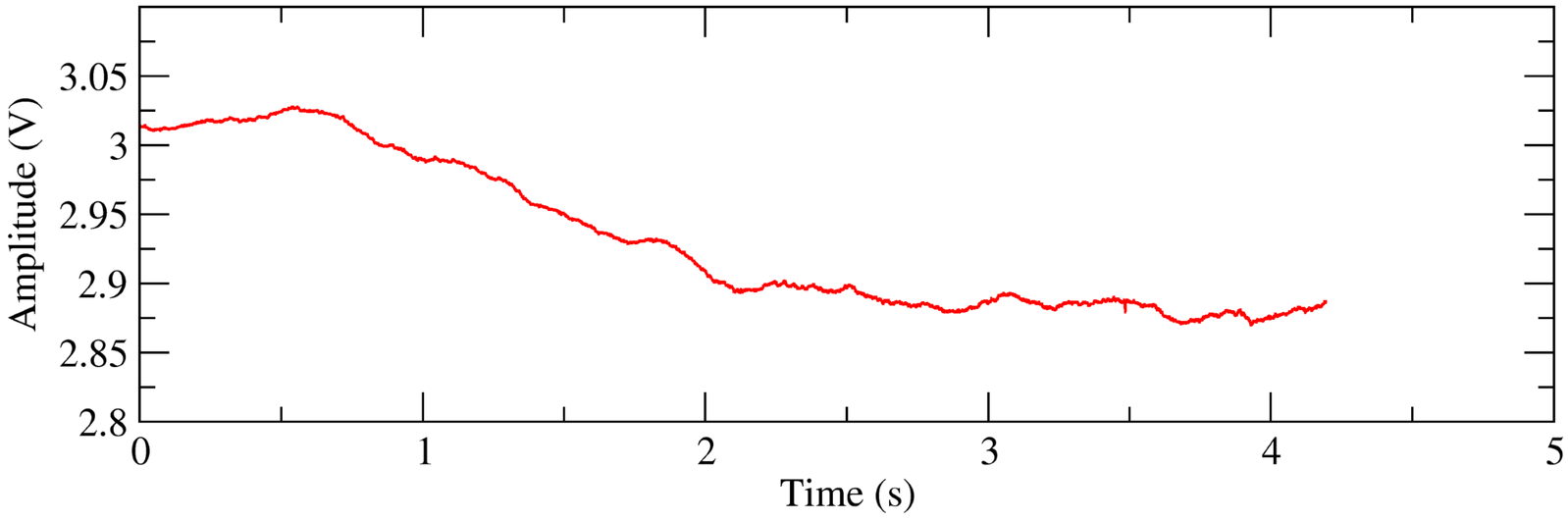

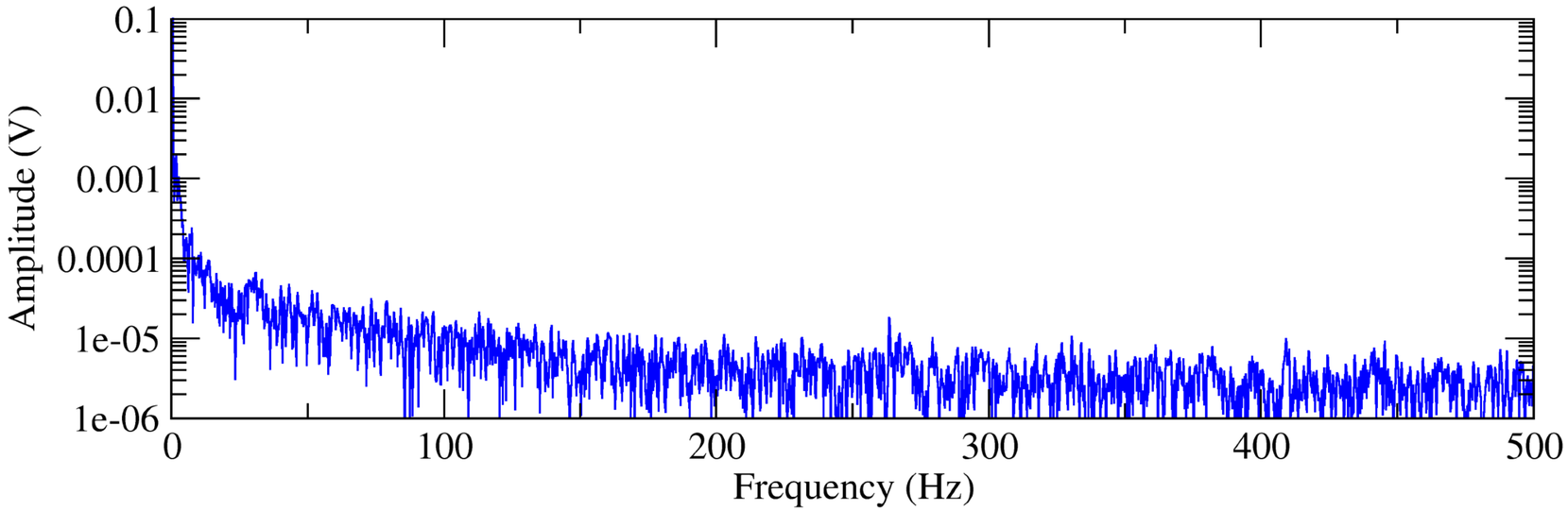

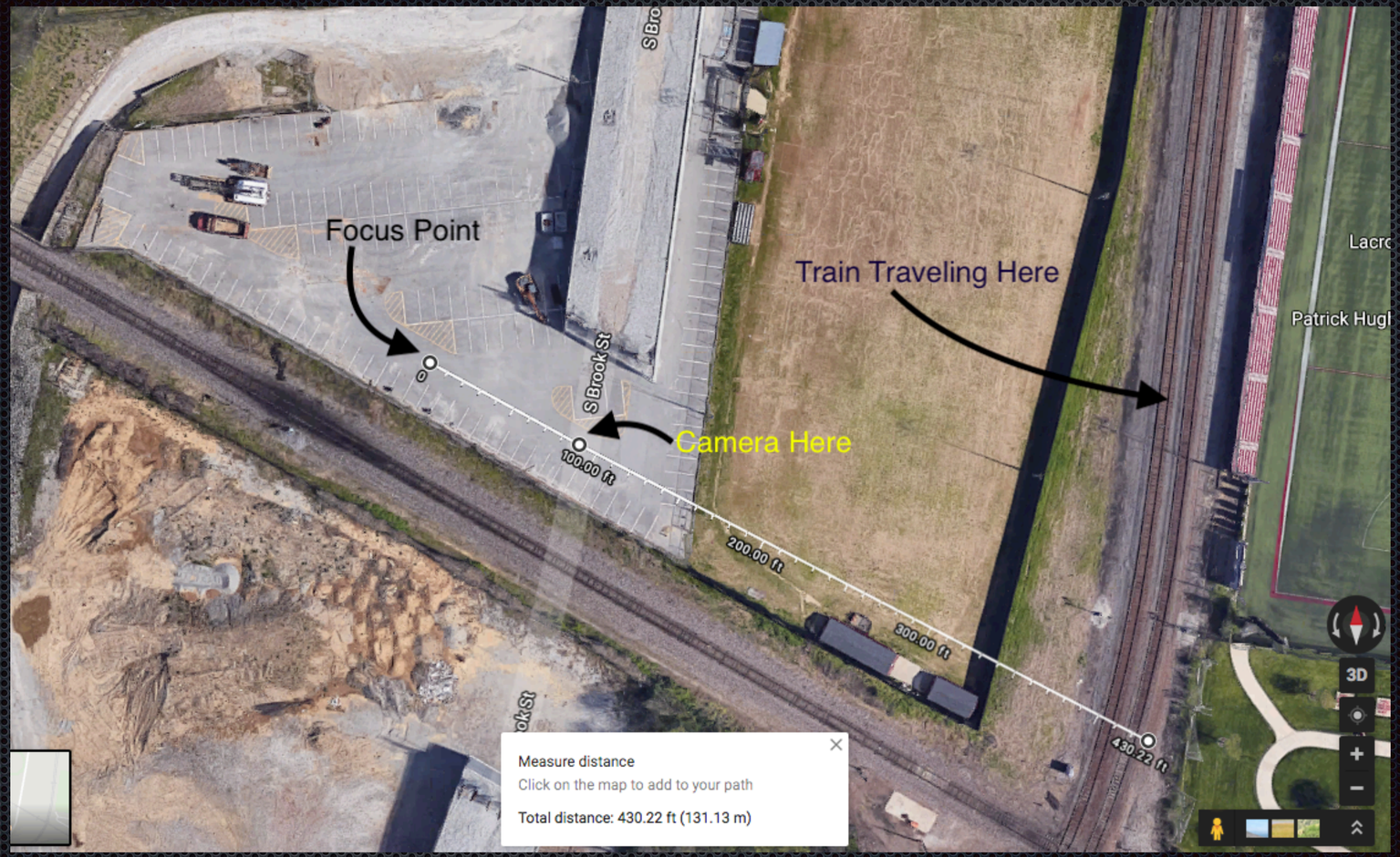
Focus Point
Train Traveling Here
Camera Here
S Brook St
0
100.00 ft
200.00 ft
300.00 ft
430.22 ft
Patrick Hugl
3D
Measure distance
Click on the map to add to your path
Total distance: 430.22 ft (131.13 m)

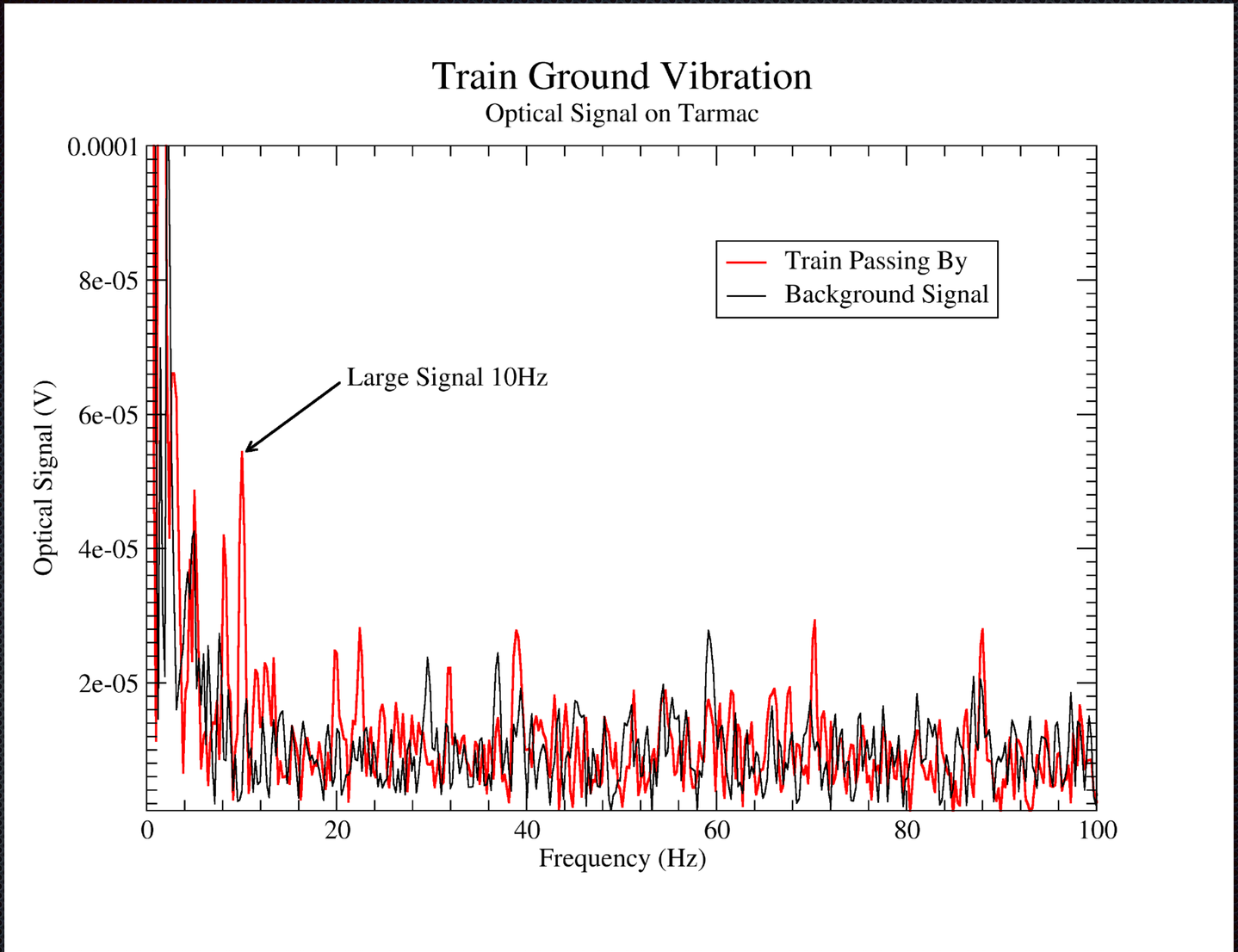
Train Ground Vibration
Optical Signal on Tarmac
0.0001
8e-05
6e-05
4e-05
2e-05
Optical Signal (V)
0
20
40
60
80
100
Frequency (Hz)
Train Passing By
Background Signal
Large Signal 10Hz

University of Louisville
- Natural Sciences
Universi
of Louisv
Dougherty Hall
University of Louisville
Physics Department on...
LAB
Eastern Pkwy
Eastern Pkwy
100.00 ft
200.00 ft
300.00 ft
400.00 ft
500.00 ft
580.53 ft
Sackett Hall
JB Speed School
of Engineering
W.S. Speed
City Cafe
Measure distance
Click on the map to add to your path
Total distance: 580.53 ft (176.94 m)

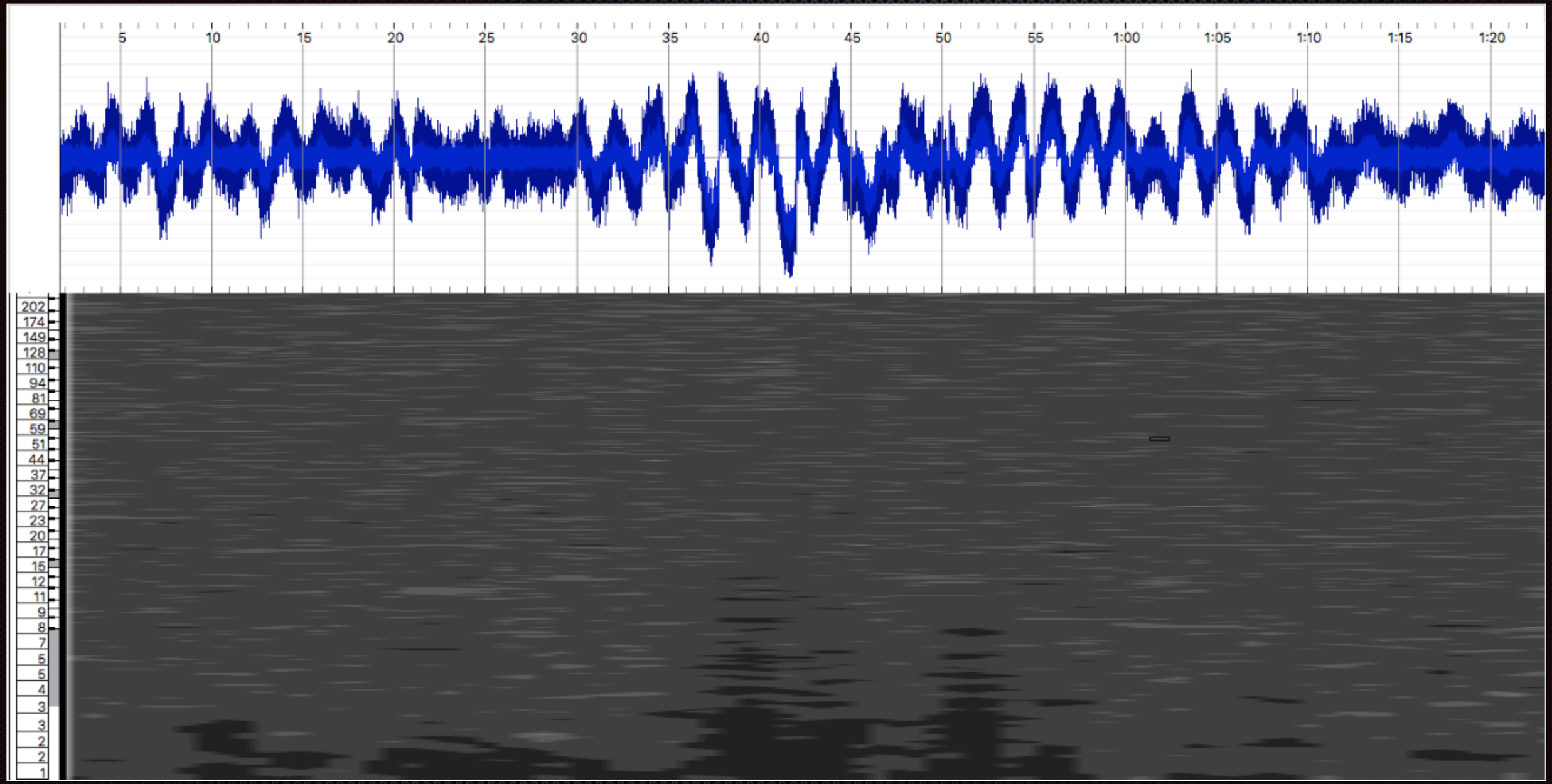
5
10
15
20
25
30
35
40
45
50
55
1:00
1:05
1:10
1:15
1:20
202
174
149
128
110
94
81
69
59
51
44
37
32
27
23
20
17
15
12
11
9
8
7
5
5
4
3
3
2
2
1

Make a test plate

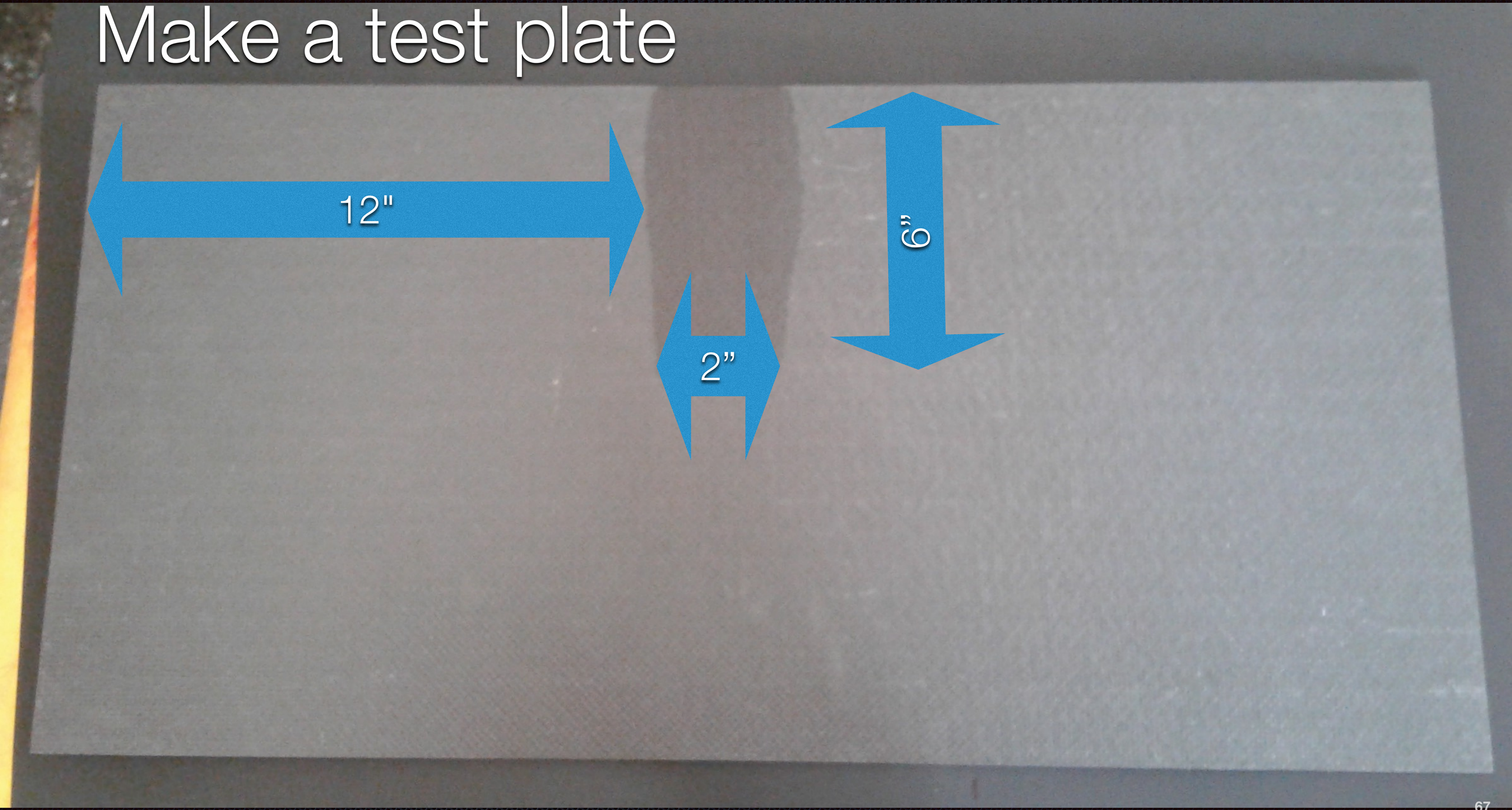

Finished Plate

Test Setup

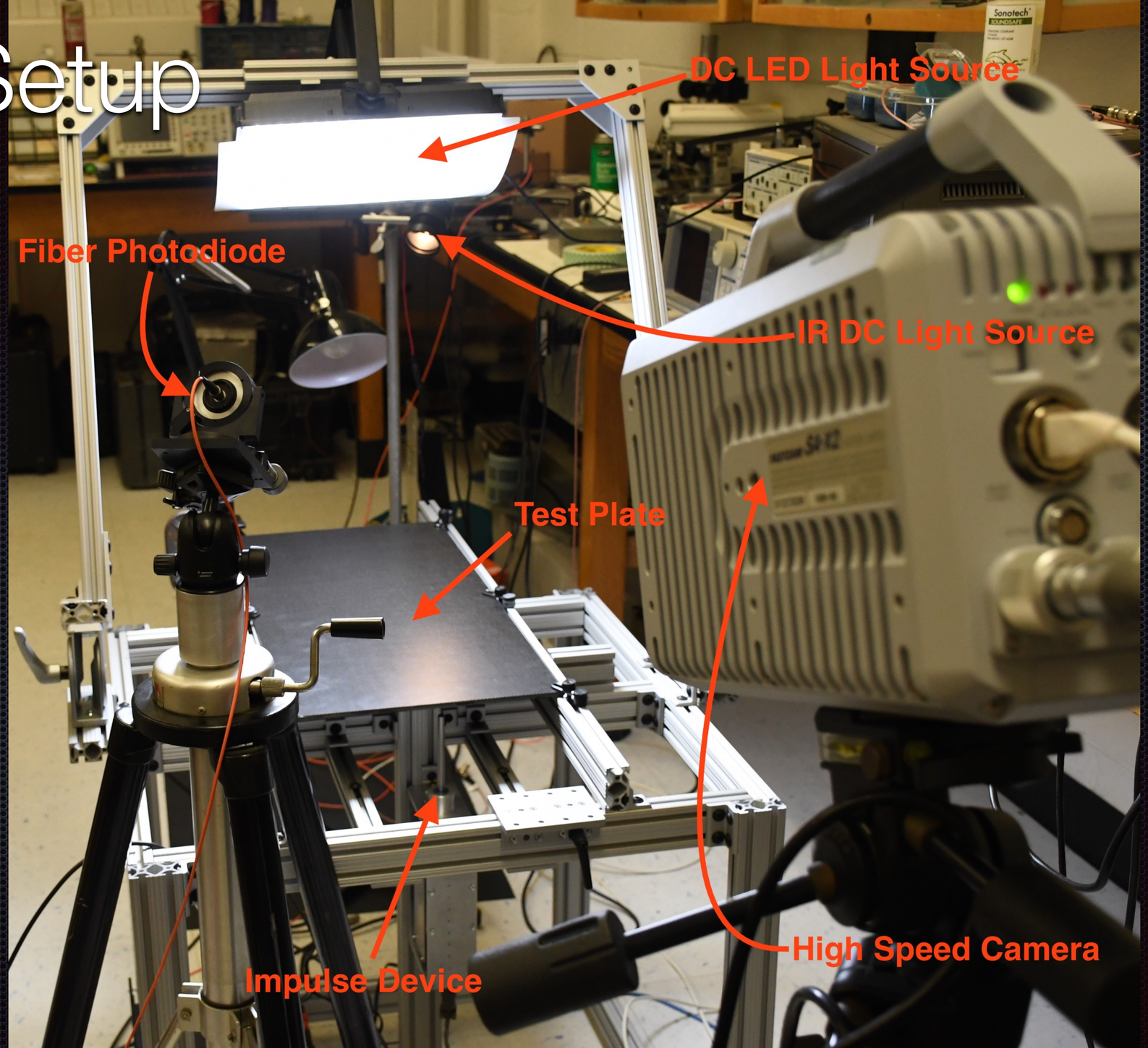
DC LED Light Source
Fiber Photodiode
IR DC Light Source
Test Plate
High Speed Camera
Impulse Device

Optical Vibration Study

FFT of Optical Signal

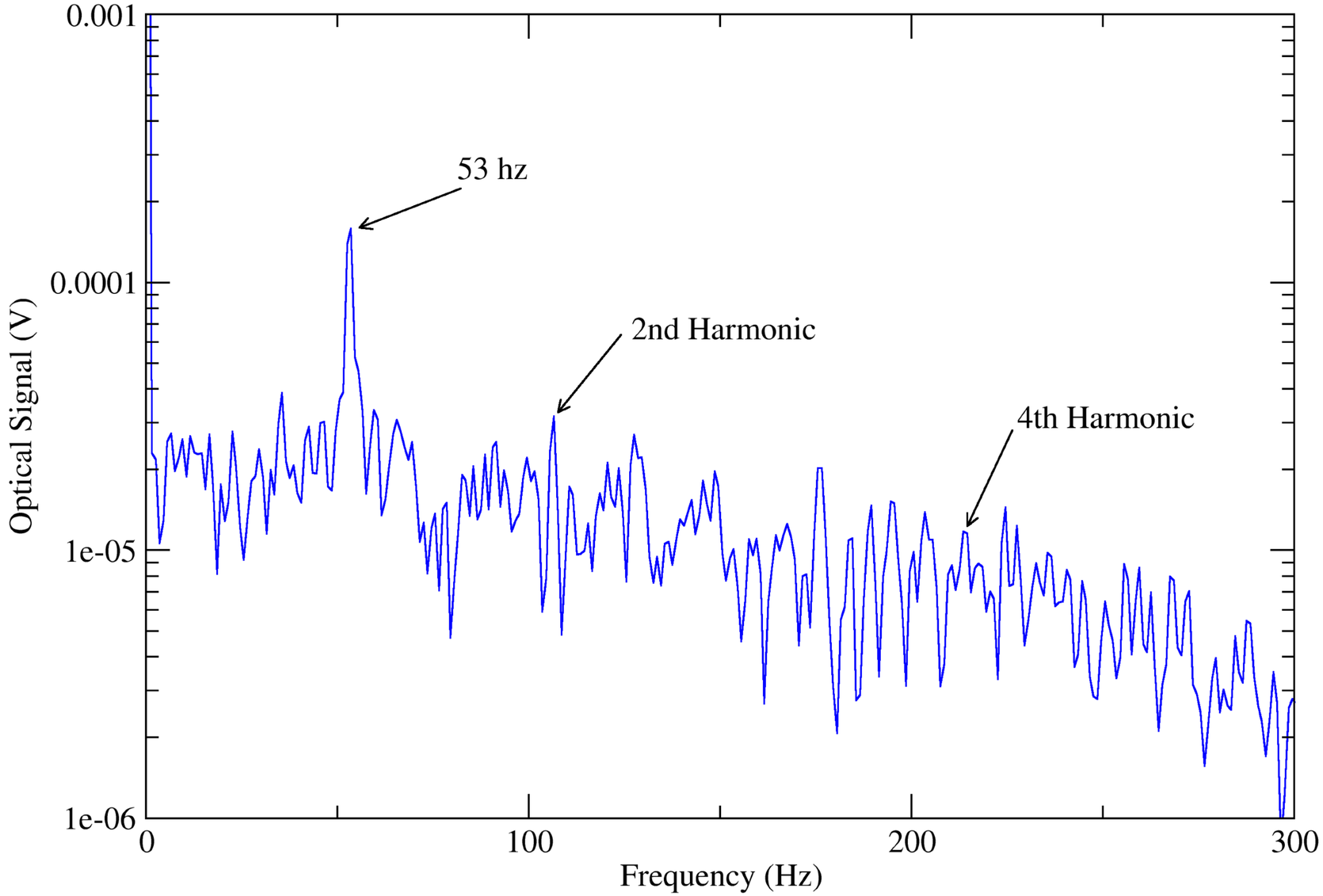

Good 93.26 hz

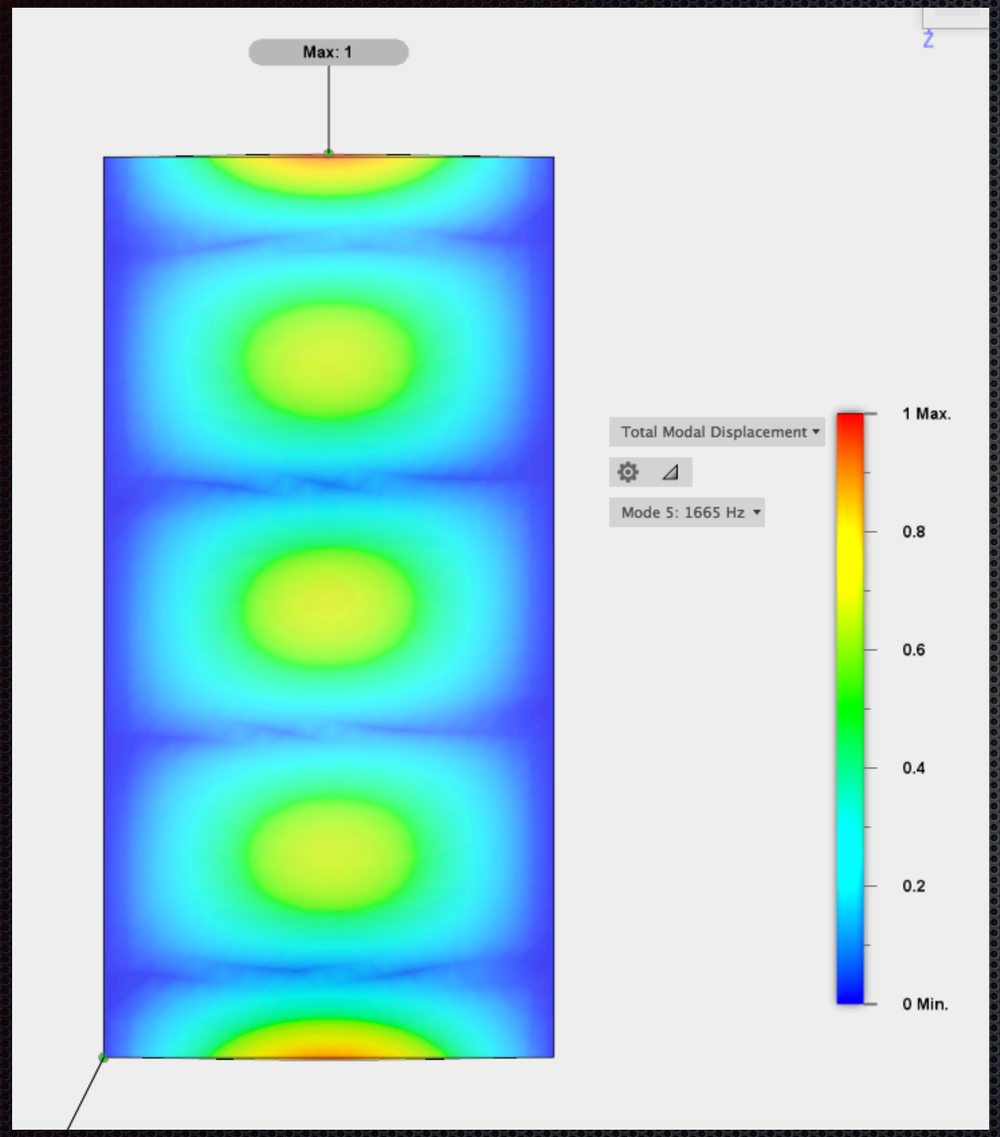

Bad 53.0 hz

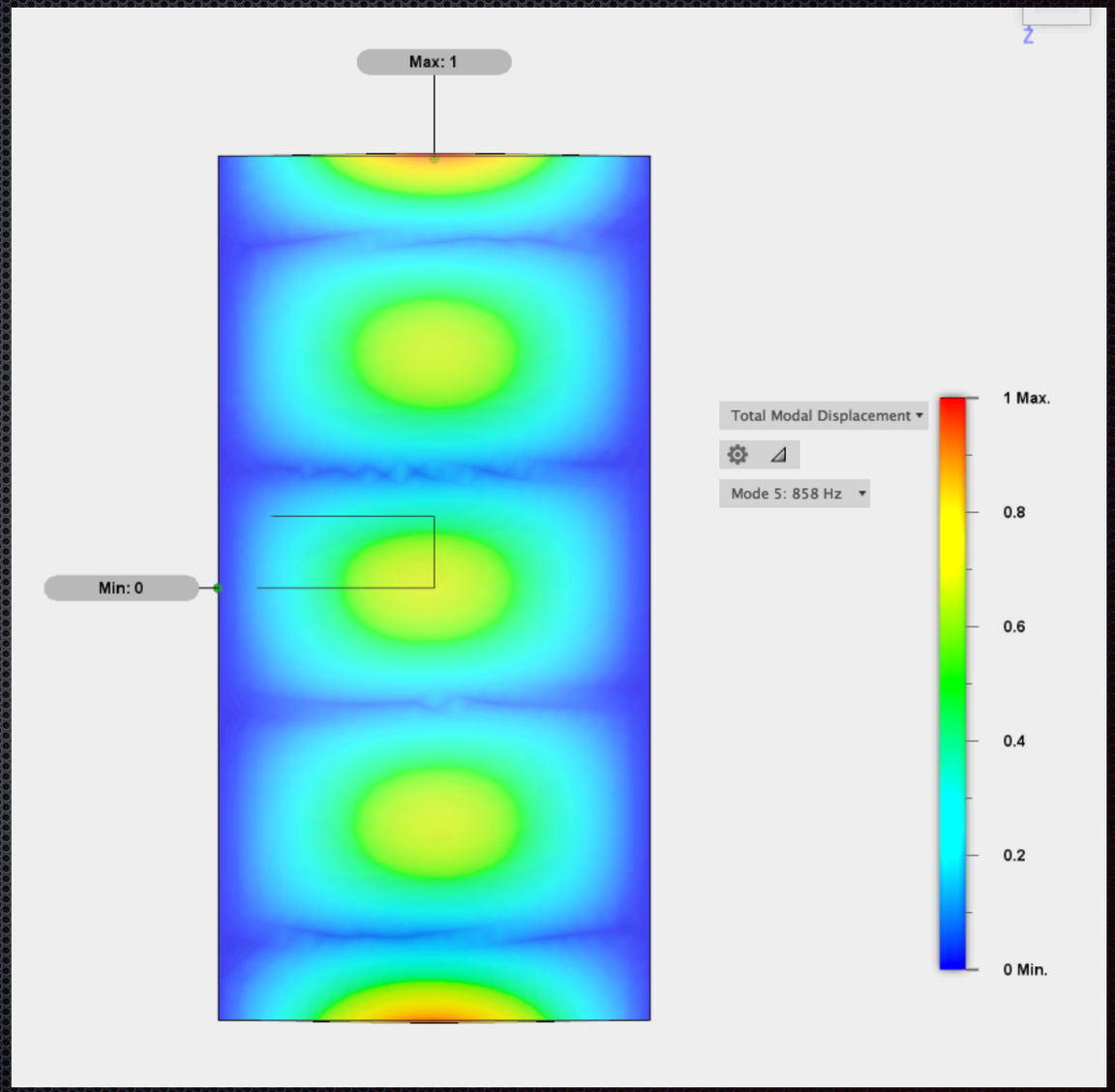

Hammer Impulse Measurements

The “Old Fashion” way!

Not really! This hammer has a force sensor in it!

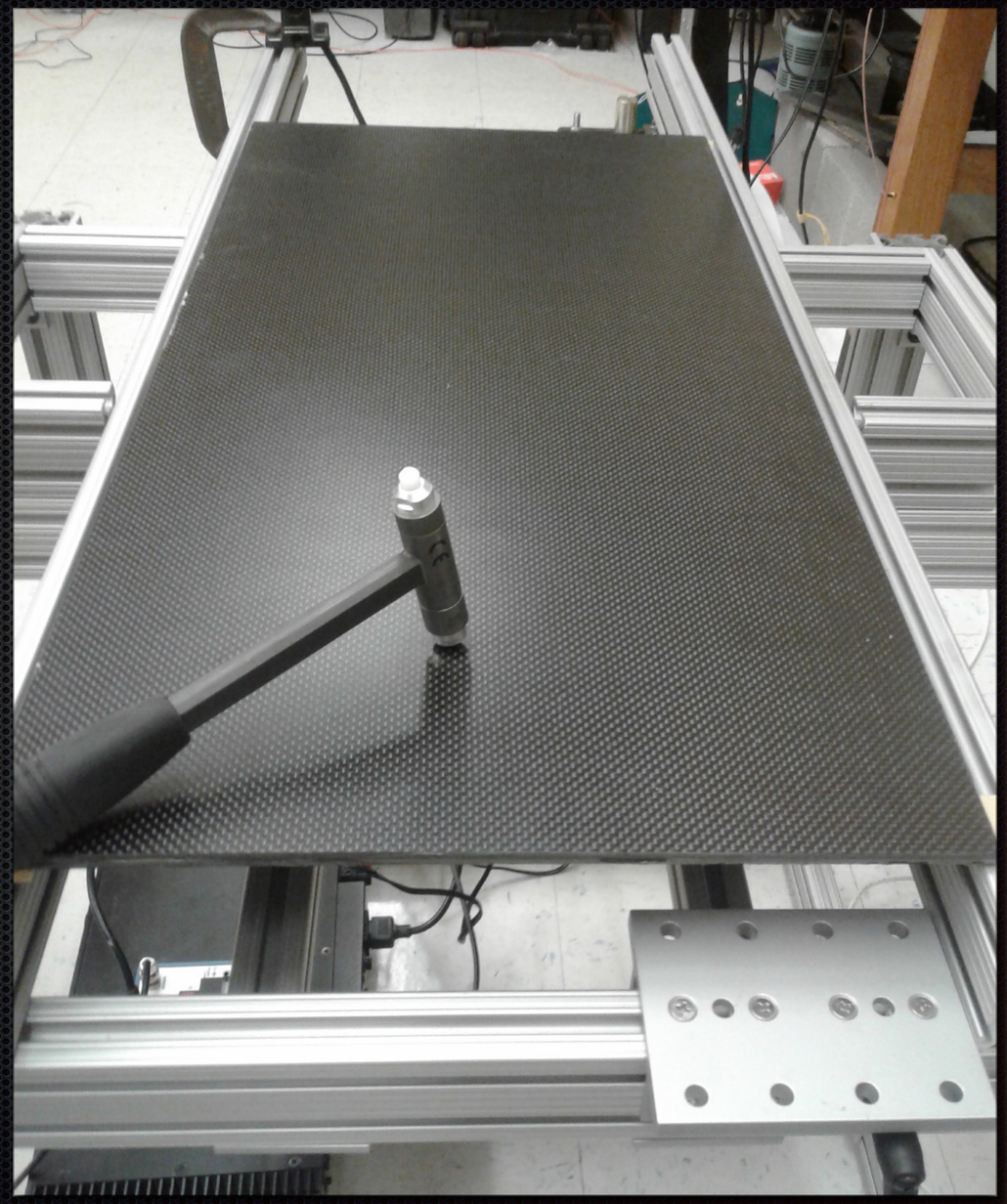

Force of Impulse

Handheld Hammer Impact Tool

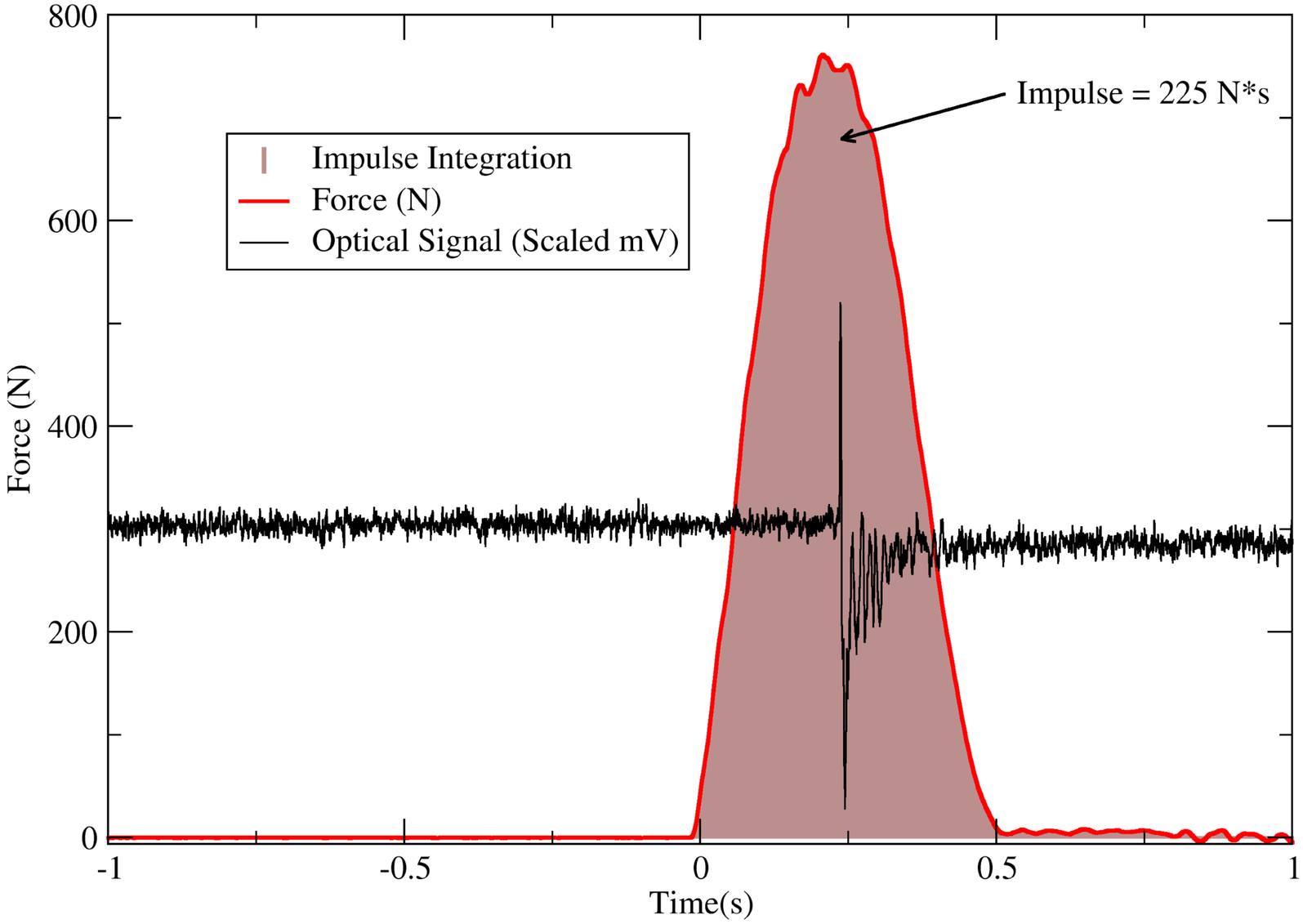

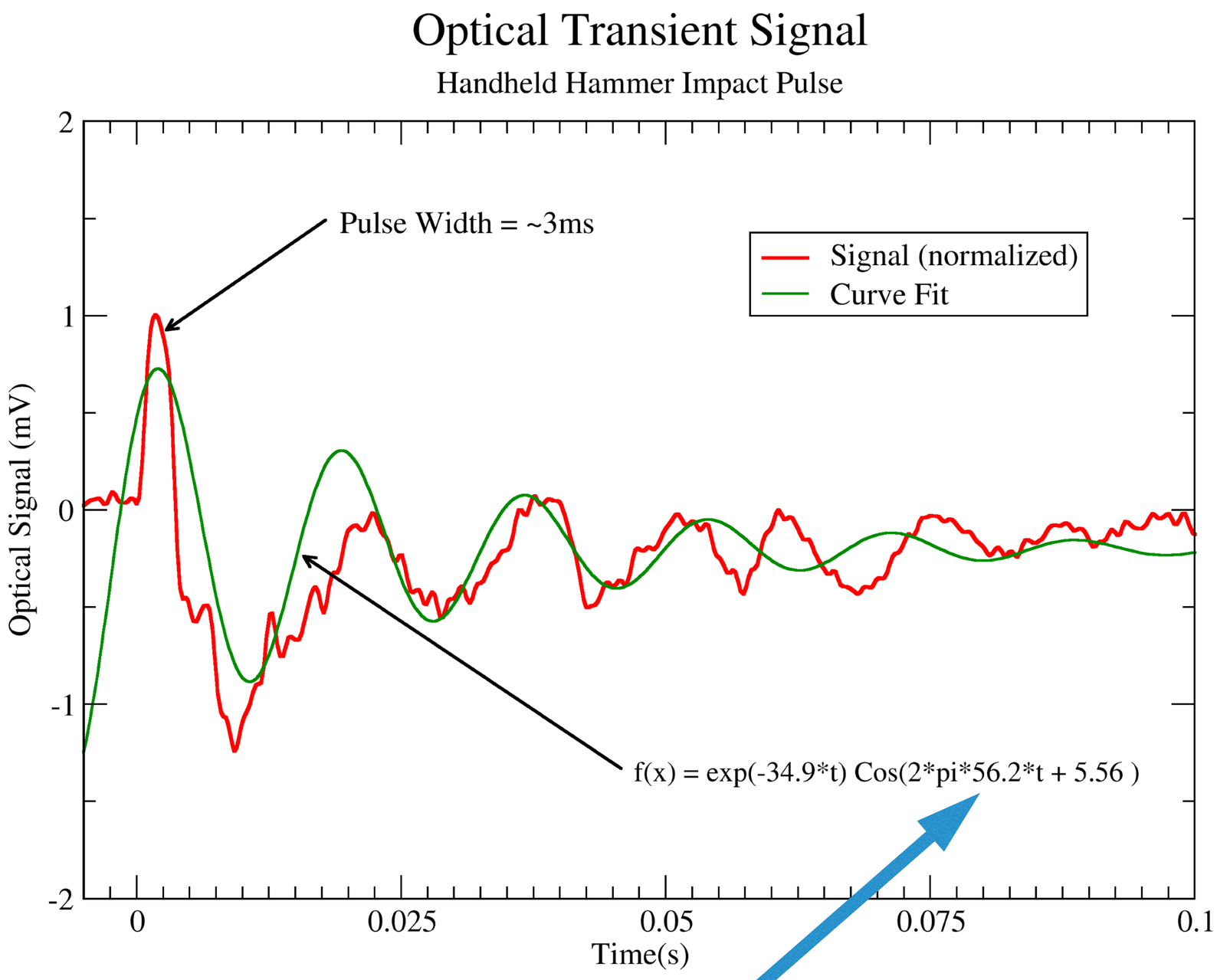
Optical Transient Signal
Handheld Hammer Impact Pulse
Pulse Width = ~3ms
Signal (normalized)
Curve Fit
f(x) = exp(-34.9*t) Cos(2*pi*56.2*t + 5.56)
Optical Signal (mV)
Time(s)
2
1
0
-1
-2
0
0.025
0.05
0.075
0.1

~ 50 hz range

Impulse Measurements

Pinger Measurements

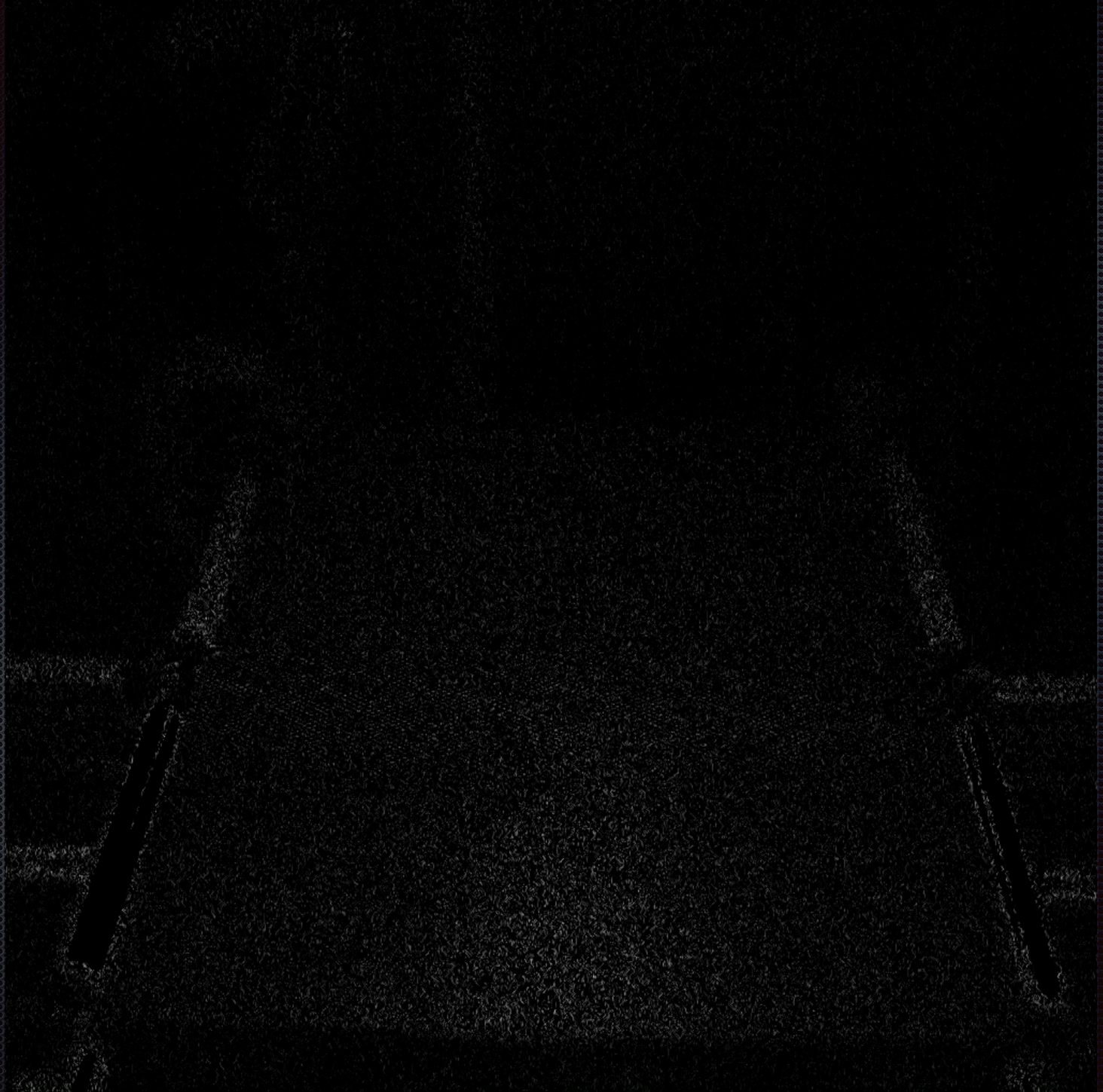

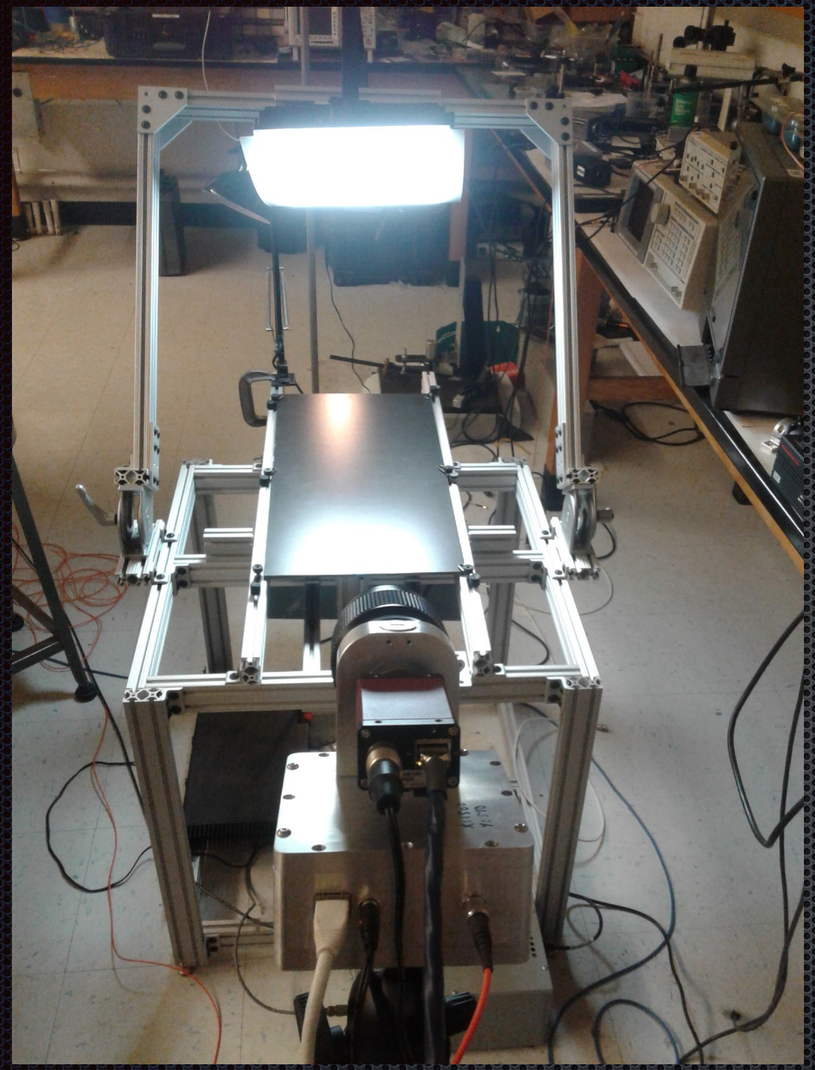

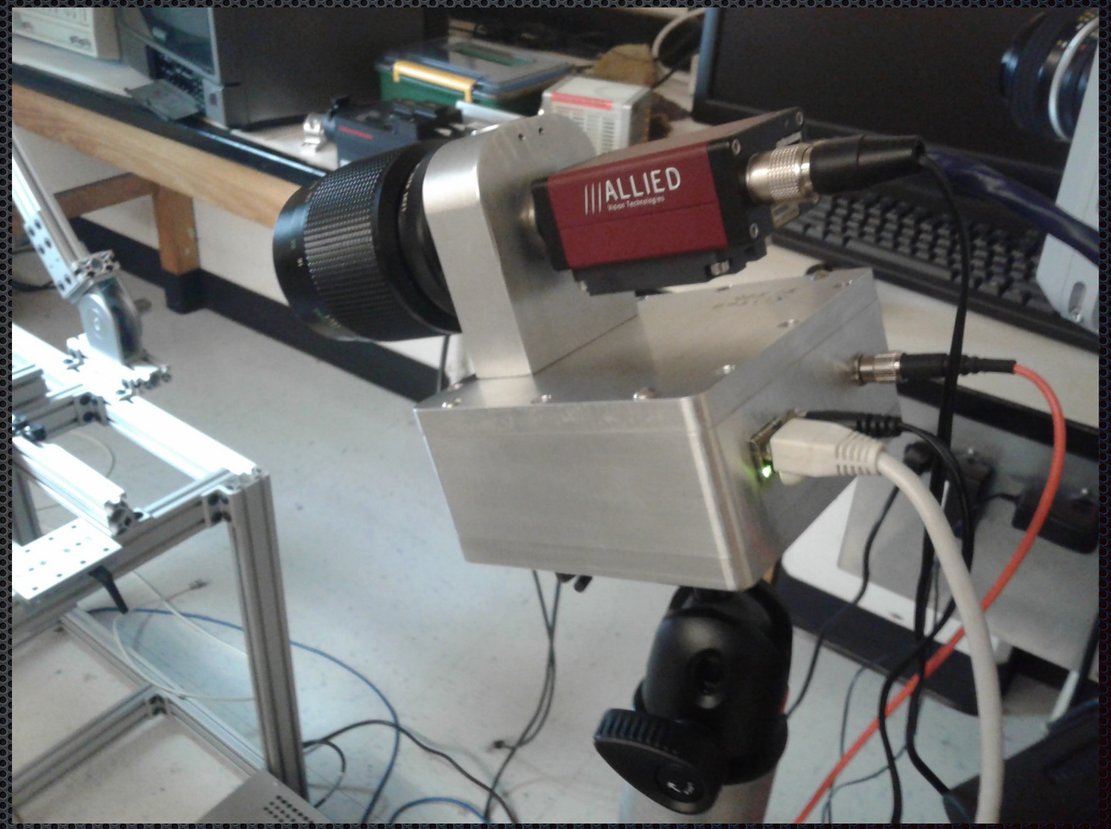
ALLIED

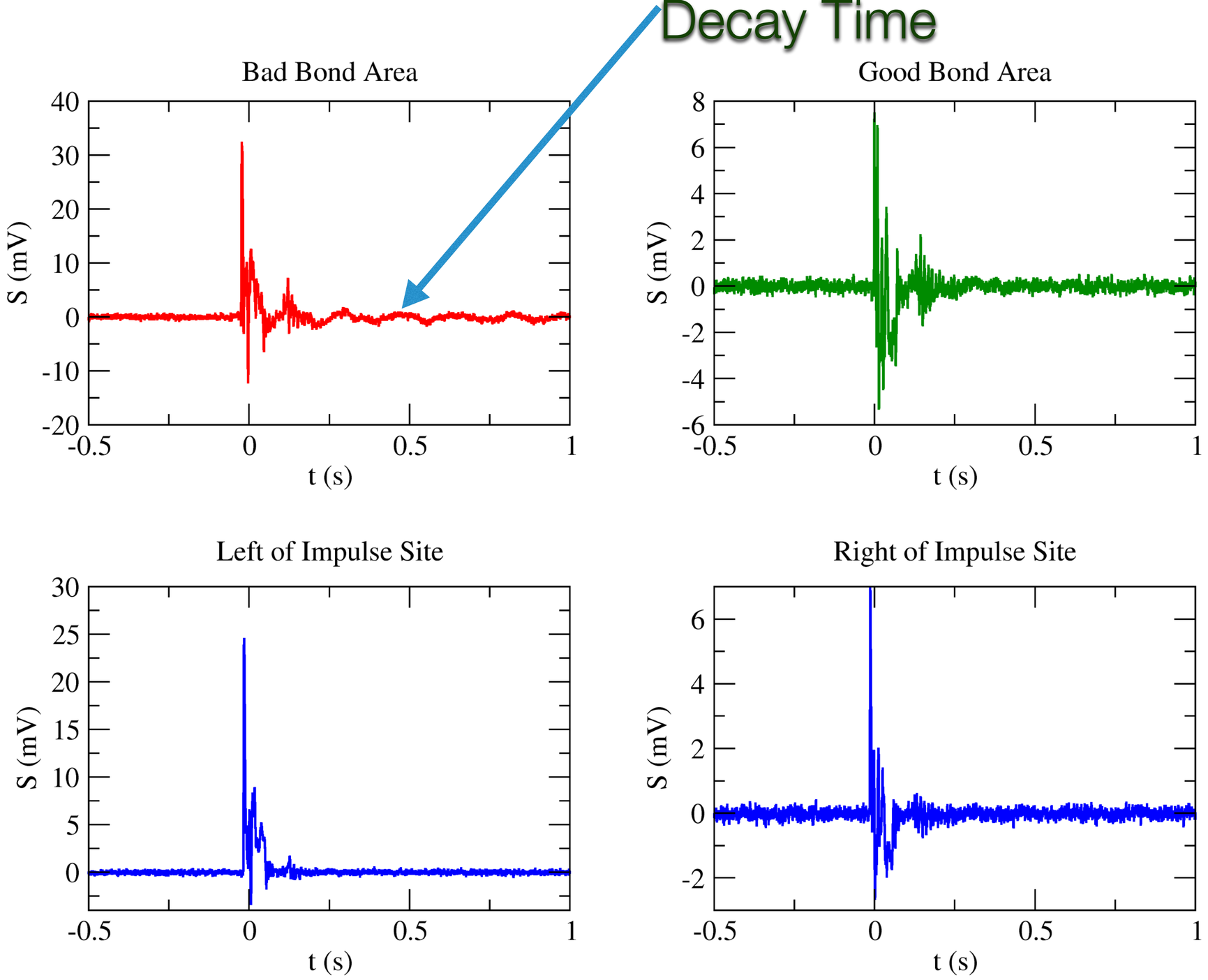
Decay Time
Bad Bond Area
Good Bond Area
Left of Impulse Site
Right of Impulse Site
S (mV)
t (s)

“Zoom” in

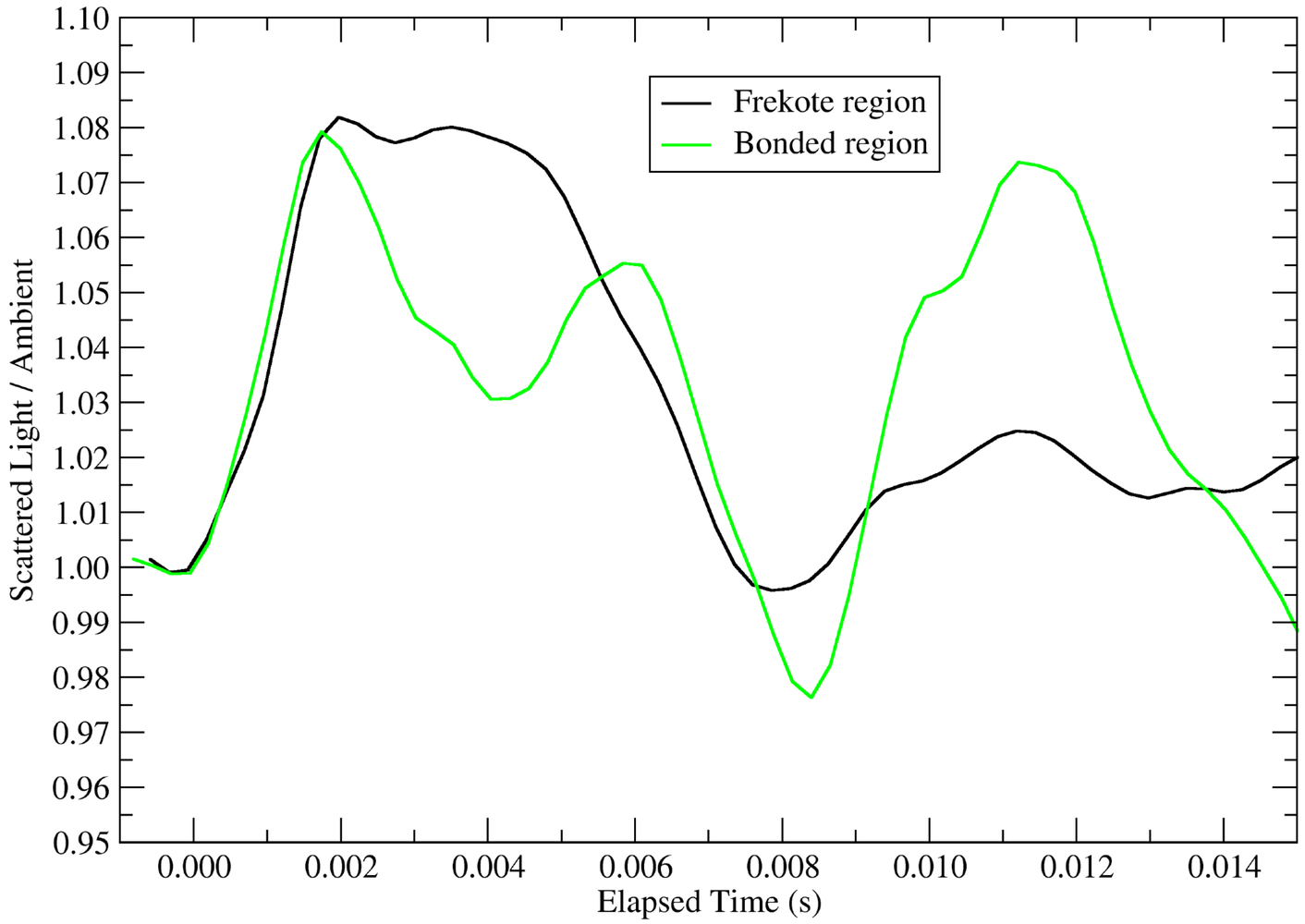
Frekote region
Bonded region
Scattered Light / Ambient
Elapsed Time (s)
1.10
1.09
1.08
1.07
1.06
1.05
1.04
1.03
1.02
1.01
1.00
0.99
0.98
0.97
0.96
0.95
0.000
0.002
0.004
0.006
0.008
0.010
0.012
0.014

Good 93.26 hz

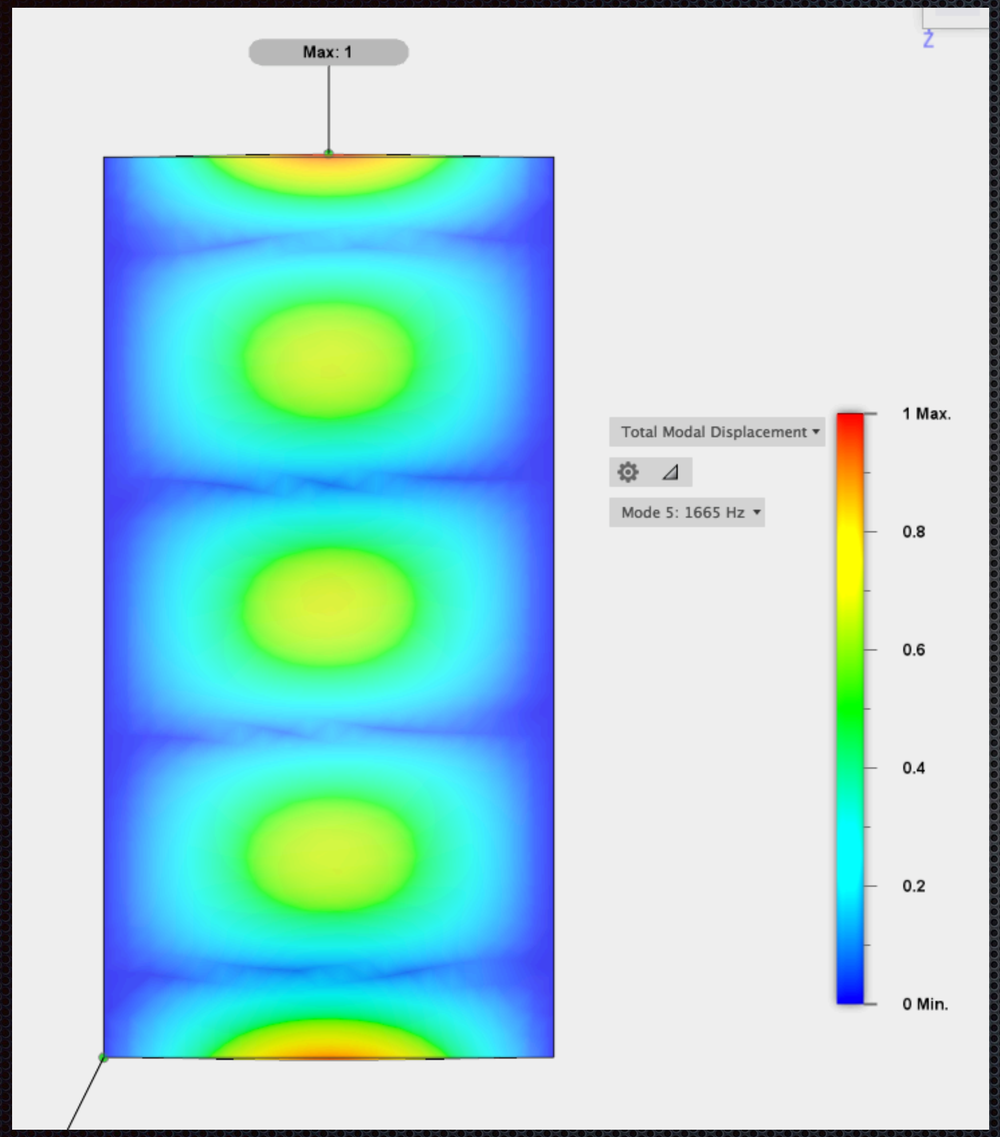

Bad 53.0 hz

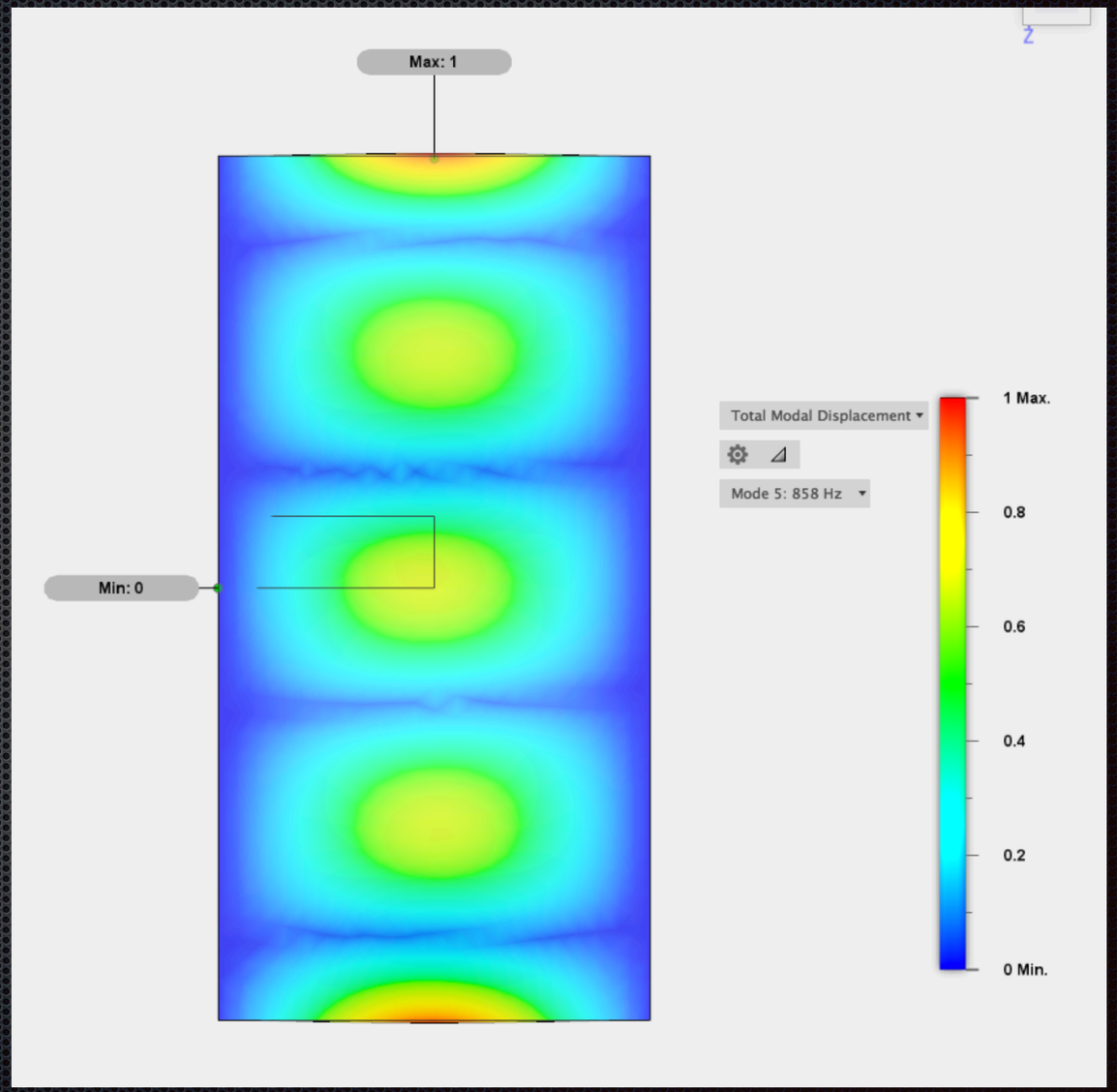

Conclusions

- A High Dynamic Range DAQ was developed.
- A Fiber positioning device was designed and constructed.
- An Impulse device “pinger” was designed and constructed.
- Devices show promise in detecting small optical signals from surface motions.

Future Work

Improvements and Continuing Experiments

Astronomy

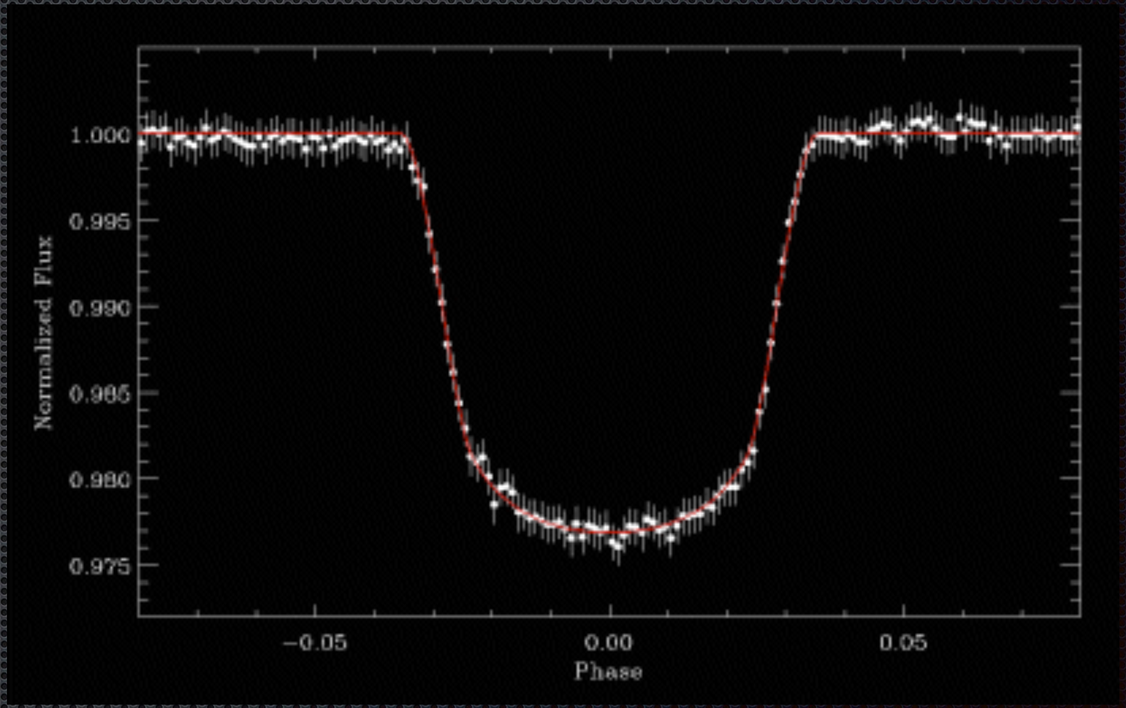
1.000
0.995
0.990
0.985
0.980
0.975
Normalized Flux
−0.05
0.00
0.05
Phase

Structural Analysis for Aircraft

Linear Motor can be used as generator

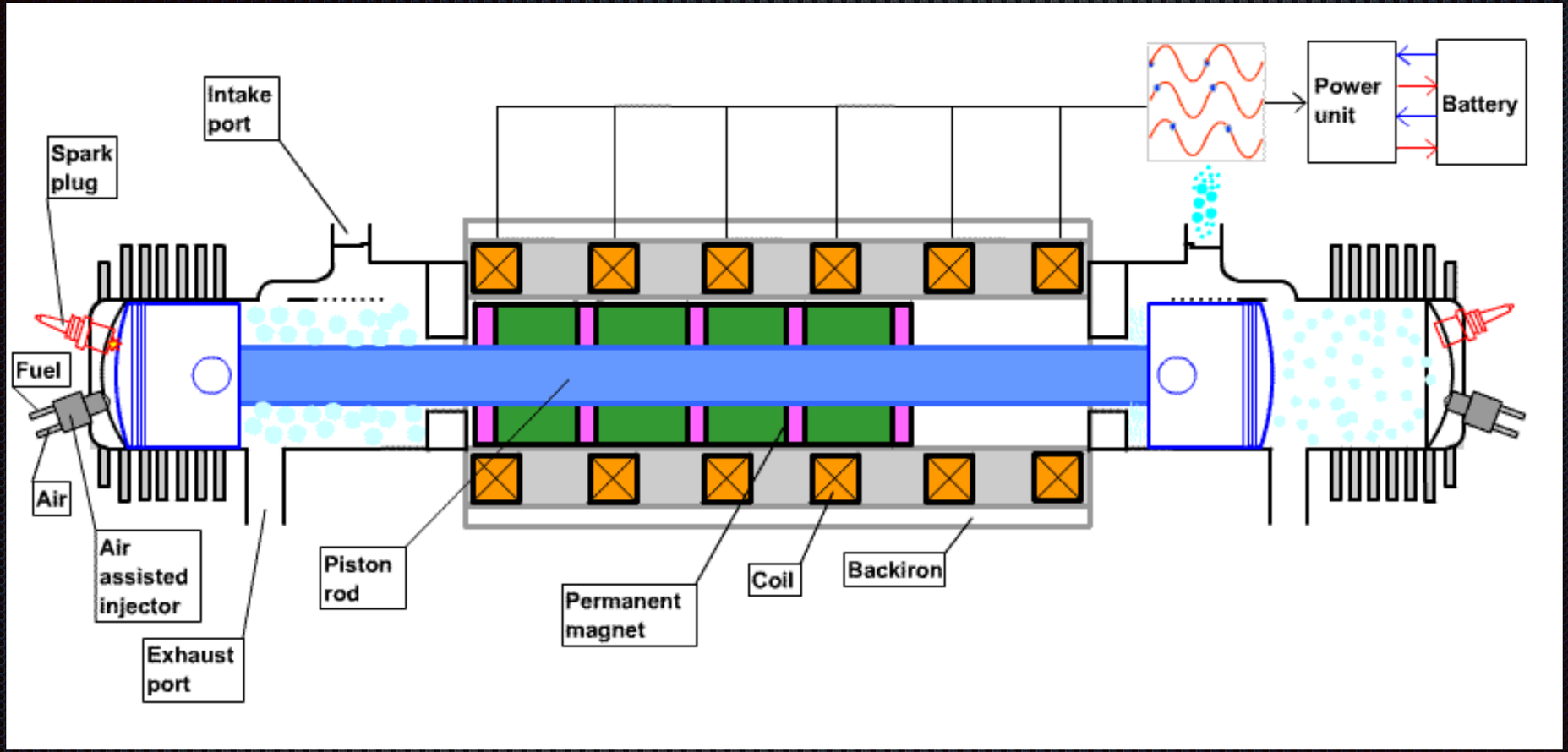

References

- http://www.analog.com/en/products/analog-to-digital-converters/standard-adc/precision-adc-20msps/single-channel-ad-converters/ltc2508-32.html#product-overview
- T. Instruments, “ADS1262 ADC,” http://www.ti.com/product/ADS1262.
- T. D. Rossing and D. A. Russell, “Laboratory observation of elastic waves in solids,” American Journal of Physics 58, 1153–1162 (1990).
- Xmgrace

- wikipedia.org
- http://sci.esa.int/corot/40952-transit-of-exoplanet-corot-exo-1b/
- https://en.wikipedia.org/wiki/Cirrus_SR22#/media/File:Cirrus_SR-22_G3_GTS_AN1594917.jpg
- maps.google.com
- Autodesk Fusion
- https://en.wikipedia.org/wiki/Exoplanet
- https://en.wikipedia.org/wiki/Bidirectional_reflectance_distribution_function
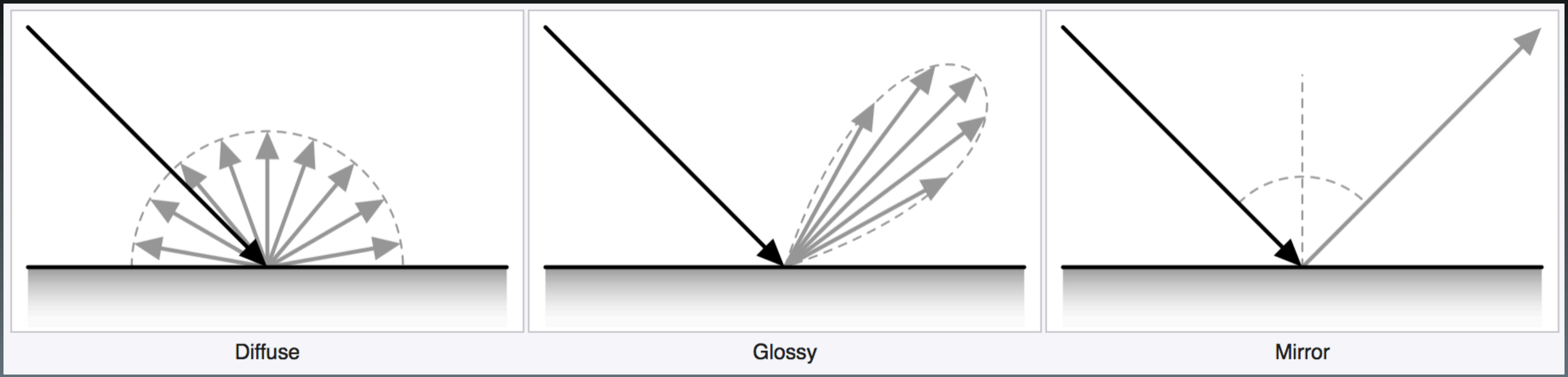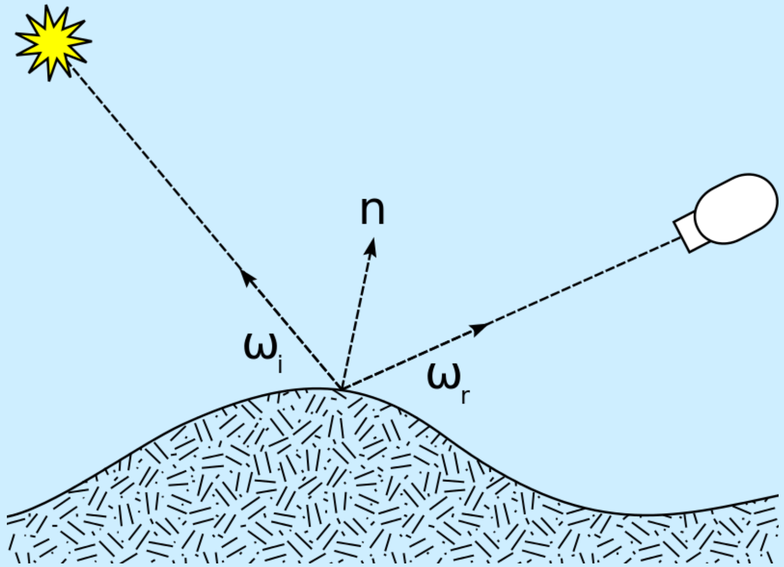
Bidirectional reflectance distribution function