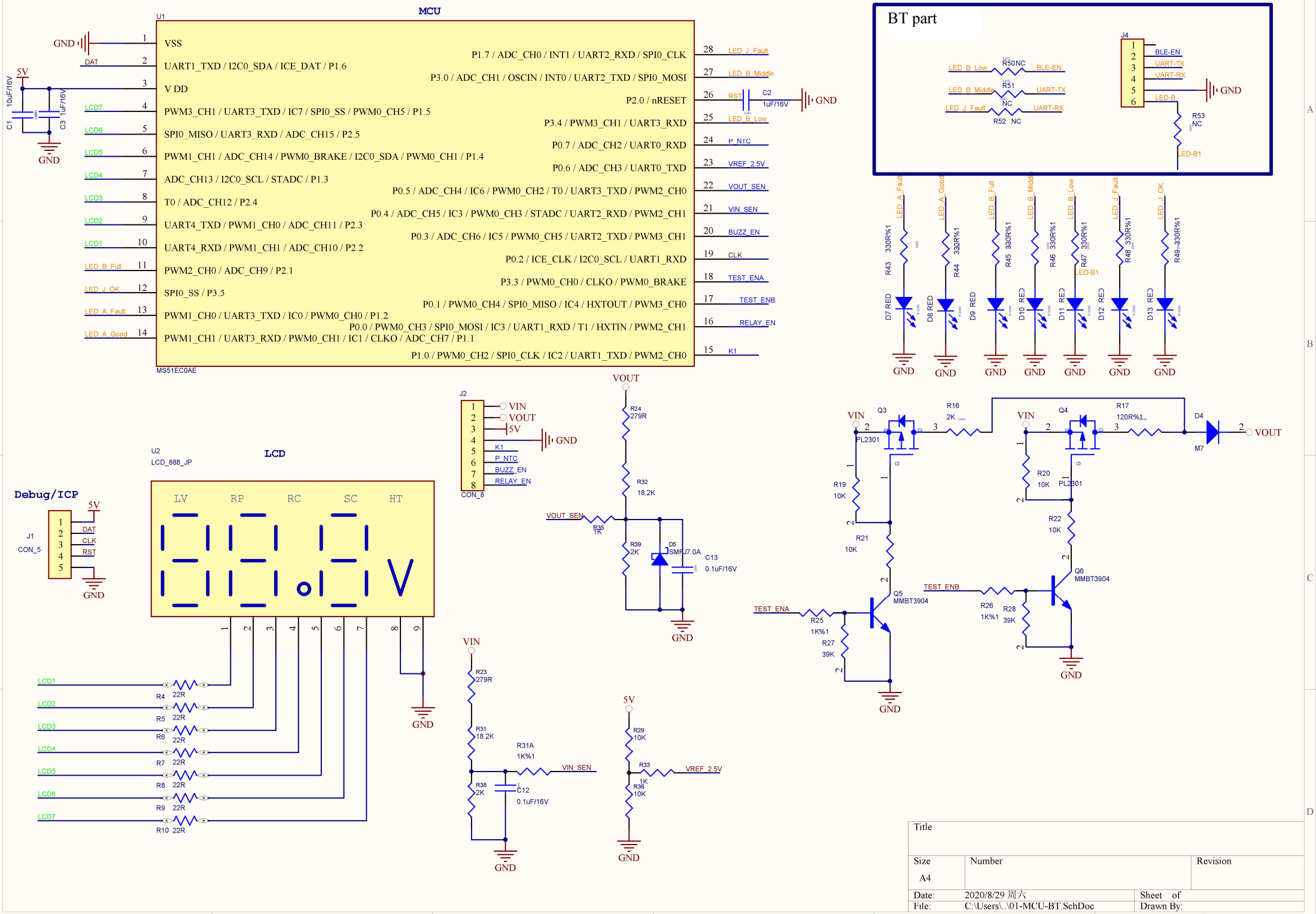

Title		
Size A4	Number	Revision
Date: 2020/8/29 周六		Sheet of
File: C:\Users\..\01-MCU-BT.SchDoc		Drawn By: