Classic Steel®

Fire Steel Door

ISO 9001:2008 Certified
Certificate No. FM 509124

Model : FRD, 3 Hr Fire Rating, UL10C

CLASSIFIED C UL US R25577

C UL US LISTED R25758

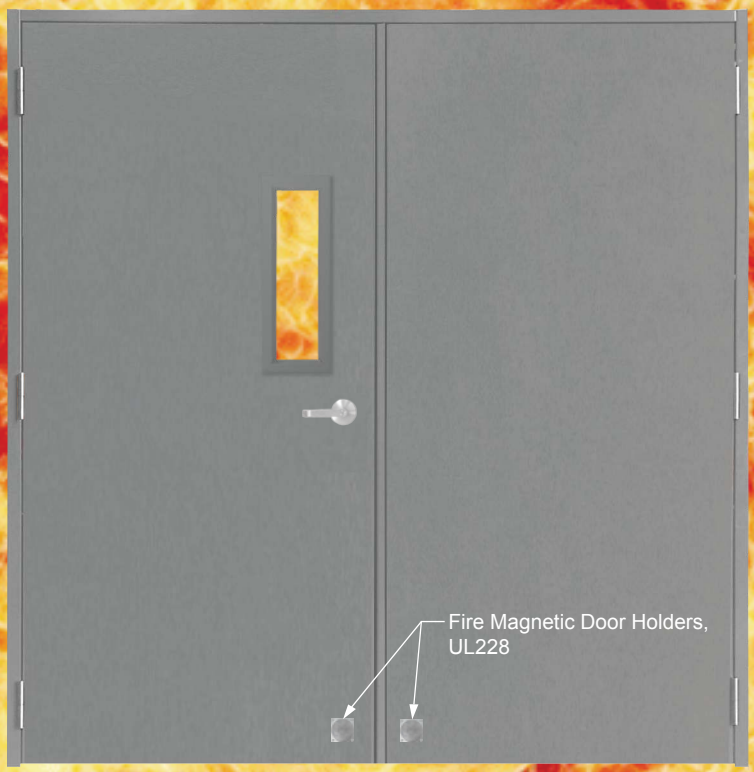

Installation Instruction

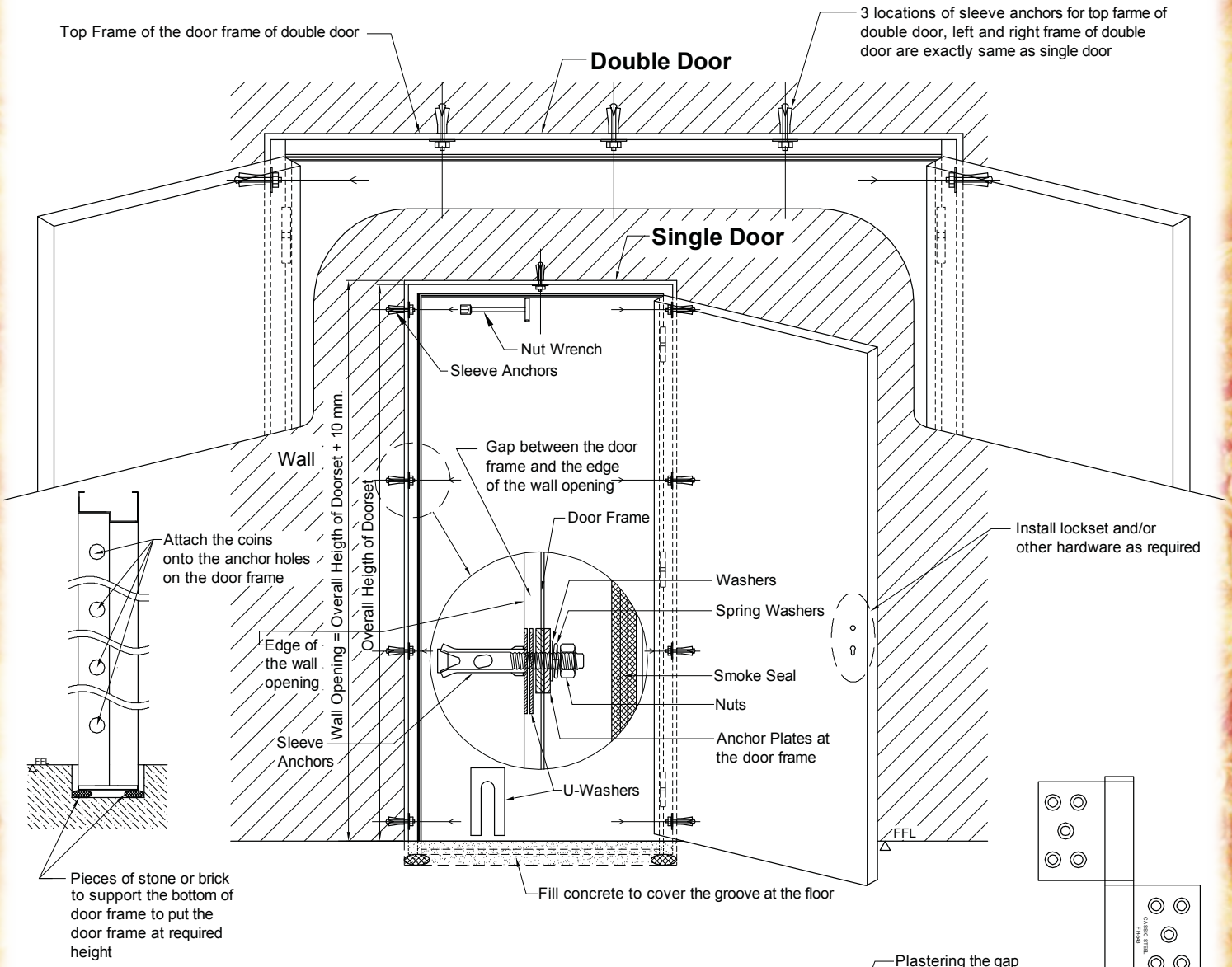

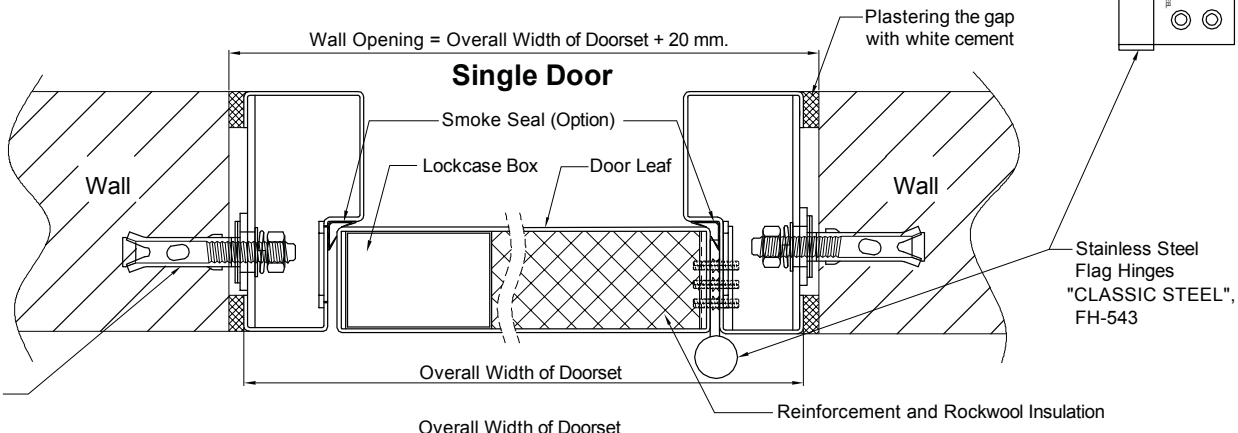

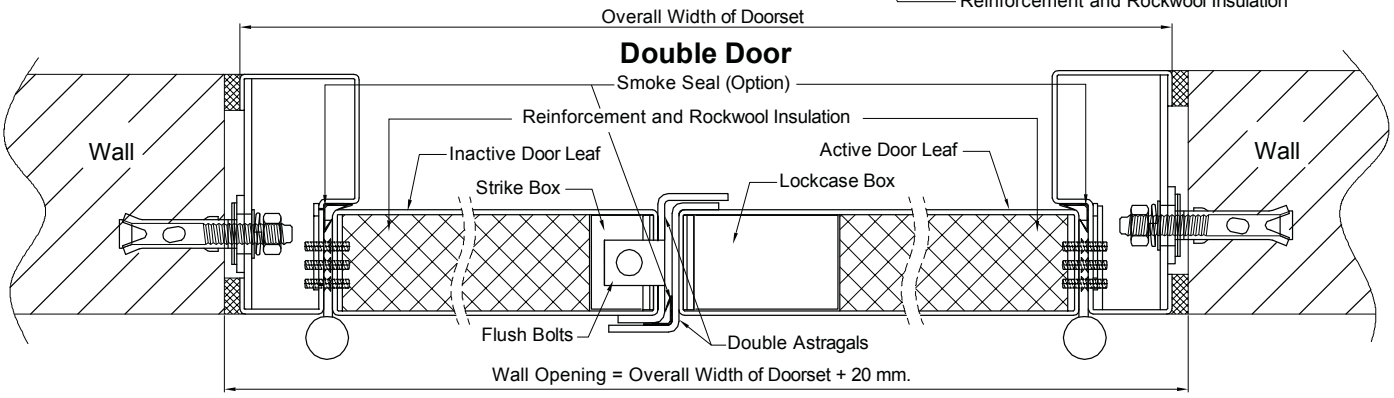

Coins, Sleeve Anchors and U-Washers have been provided together with the doorset

Door Hardware (OPTION)

C UL US LISTED Fire Exit Device , Rim Type, Aluminum Finish, 3Hr Fire Rating, UL10C

C UL US LISTED Fire Exit Device , Rim Type, Aluminum Finish, 3Hr Fire Rating, UL10C

C UL US LISTED Fire Exit Device , Rim Type, Aluminum Finish, 3Hr Fire Rating, UL10C

C UL US LISTED Fire Exit Device , Vertical Rod Type, Aluminum Finish, 3Hr Fire Rating, UL10C

Exit Lock, Satin Nickel Finish

C UL US LISTED

Swinging Fire Door Closer, Surface Mounted, Non-Hold Open Regular Arm, 180°, 60-150 Kgs, (Heavy Duty Type), Silver Finish, 3 Hr Fire Rating, UL100C

C UL US LISTED Fire Mortise Lock, Stainless Steel, 3Hr Fire Rating, UL10C

C CLASSIFIED UL US Smoke Seal, 3Hr Fire Rating, UL10C

C CLASSIFIED UL US Automatic Door Bottom Seal, 3Hr Fire Rating, UL10C

Floor Mounted Wall Mounted

C UL US LISTED Fire Magnetic Door Holders, UL228

C UL US LISTED Fire Door Coordinator, Surface Mounted, 3Hr Fire Rating, UL10C

How to Order

XXX-X XX X-XX-XX

Door Model :-

FRD = Fire Steel Door, 3 Hr Fire Rating, UL10C

Door Type :-

S = Single Door

D = Double Door

Door Style :-

00 = Flush

FG = Flush with Fire Rated Glass & Frames, 3Hr Fire Rating, UL10C

Finish :-

P = Powder

Overall Size (mm) : -

Width x Height = Overall Width (Outer Width of door frame) x Overall Height (Height from finished floor level to top of door frame)

Opening Direction (Top View) :-

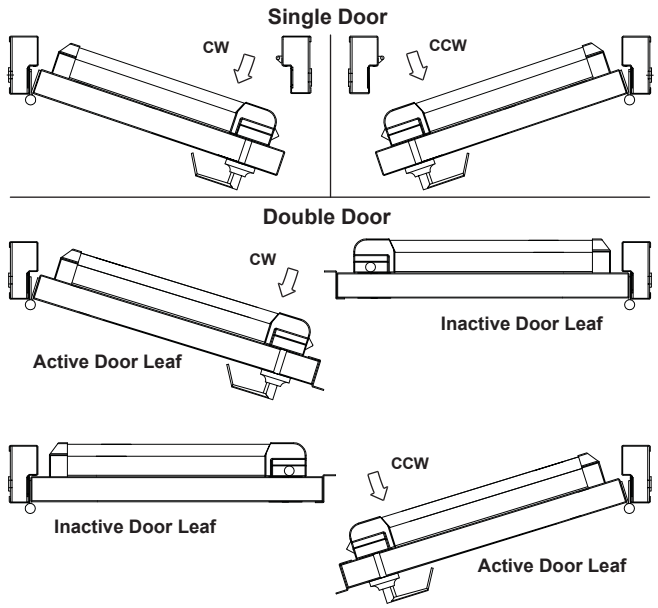

CW = Door Leaf (Active Door Leaf in case of double door) is opened to ClockWise direction

CCW = Door Leaf (Active Door Leaf in case of double door) is opened to CounterClockWise direction

Example : FRD-DFGP-1500x2100-CCW = Fire Steel Door, 3 Hr Fire Rating, UL10C Double Door, Flush with Fire Rated Glass & Frames, 3Hr Fire Rating, UL10C, Powder Finish, Overall Width 1500 mm x Overall Height 2100 mm, Active Door Leaf is opened to CounterClockWise direction.

We, **PCJ INDUSTRIES CO.,LTD.**, was established in 1998, specialize in production of Fire Steel Doors, Air Outlets, Duct Dampers and Duct Silencers. Most of our products have been certified by several organizations for standardization, i.e. :
(Underwriters Laboratories Inc.), BSI (British Standards Institution), (Thai Industrial Standards Institute), (Air Diffusion Council), (Standards Australia). Moreover, our company has been certified by (International Organization for Standardization), ISO 9001 : 2008 as well.
We have our own factory established on our own land, area 40,000 sq.m.(approx.), in Kaengkhoi, Saraburi, Thailand.

Our Policy has always been, and will continue to be, the production and On Time-Every Time Schedule Delivery of Quality, Reliability and Competitively Priced Products. We have invested for instruments, machines and we have experience engineer teams take full time to research and develop our product lines continuously, including new product designs to meet worldwide market demands.

Our products have been distributed to many countries worldwide :-

and will be distributed to a lot more countries in the future.

PCJ INDUSTRIES CO.,LTD.
พีซีเจ อุตสาหกรรม บ.จ.ก.

199/24-25 Vibhavadeerangsit Road, Samsennai, Payathai, Bangkok 10400, Thailand
Tel : +66 2 2701938, +66 2 2781604, +66 2 2790859, +66 2 2794166, +66 2 6160184, +66 2 6160185
Fax : +66 2 6160071 Email : sales@pcjindustries.co.th Website : www.pcjindustries.co.th

ISO 9001 : 2008 Certified
Certificate No. FM 509124

0 1 0 6 1 5