Australian Standard
AS 1217.2-1985

Stream Air®

ISO 9001:2008 Certified
Certificate No. FM 509124

Duct Dampers/Silencers

Volume Damper

Type : VD

Flange Type

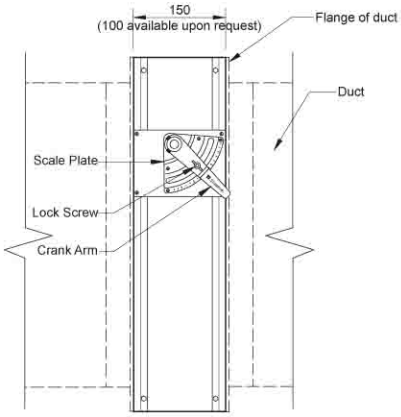

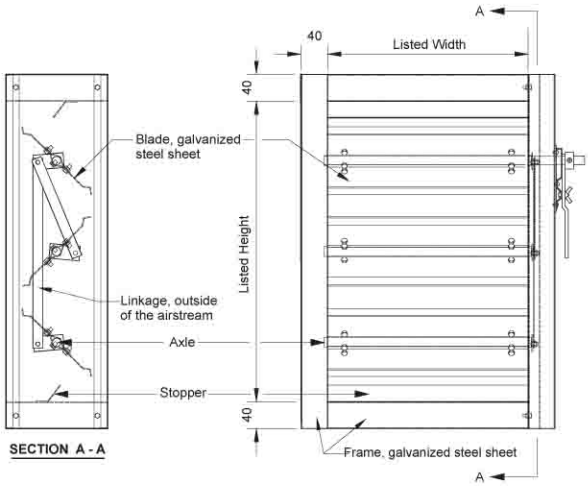

Plain End Type

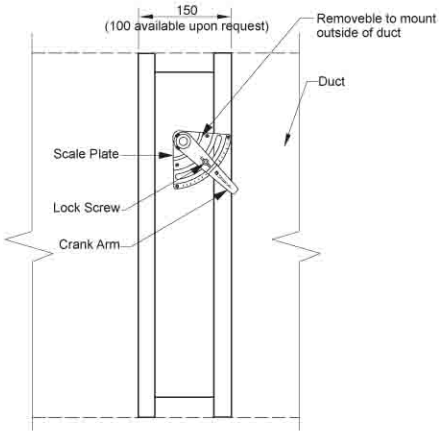

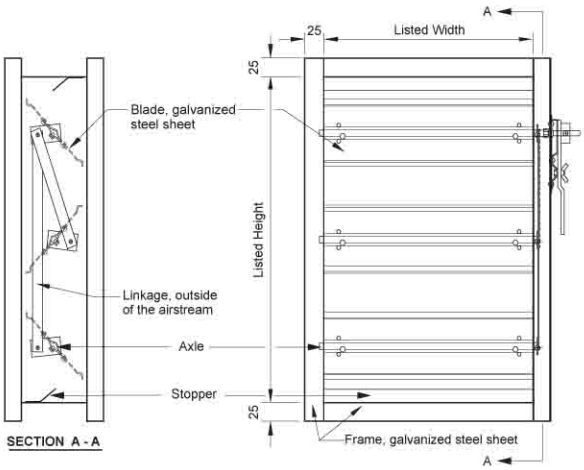

Plain End Type

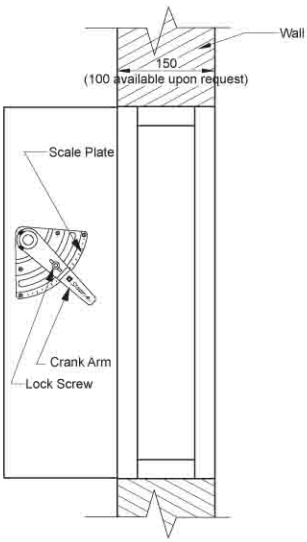

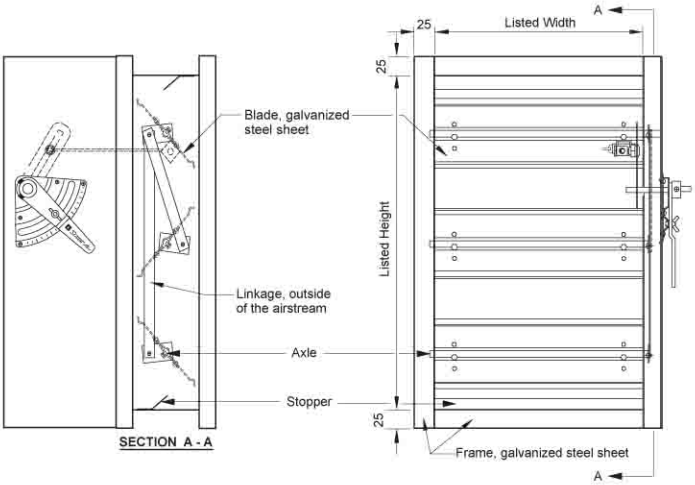

Constructed of galvanized steel sheet, rectangular shaped, high strength structure. Linkage designed to be outside of airstream (concealed in frame). Blade(s) can be adjusted manually from full open to full close in opposed pattern for high effectiveness in air volume control performance. Lockable crank arm for manual adjusting the blades with scale plate in quadrant pattern for indicating the blade position setting are also completely equipped. Suitable for mounting to duct lines, building sidewalls or shafts to control volume of supply, exhaust or fresh air manually.

(Measurement : mm)

Volume Damper

Type : VL

Flange Type

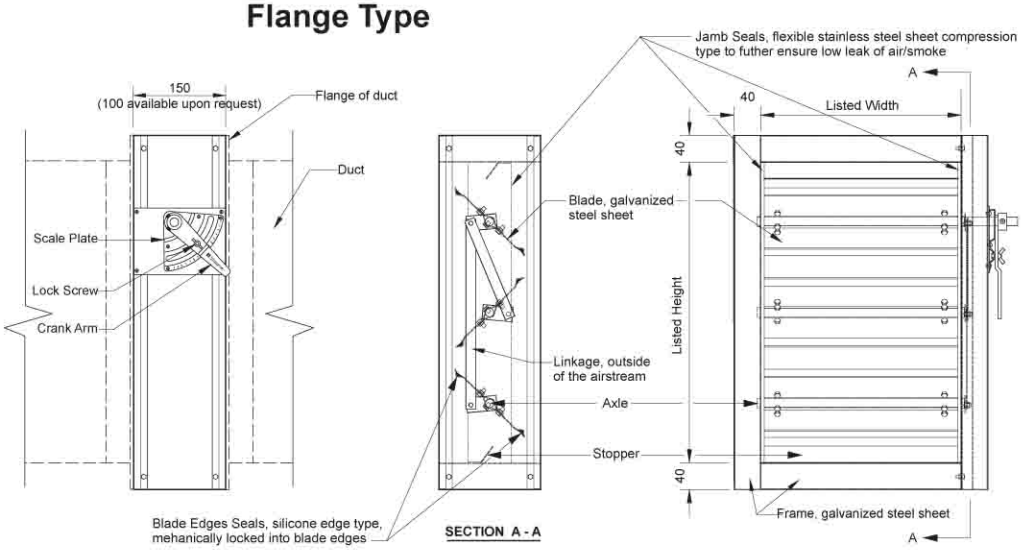

Plain End Type

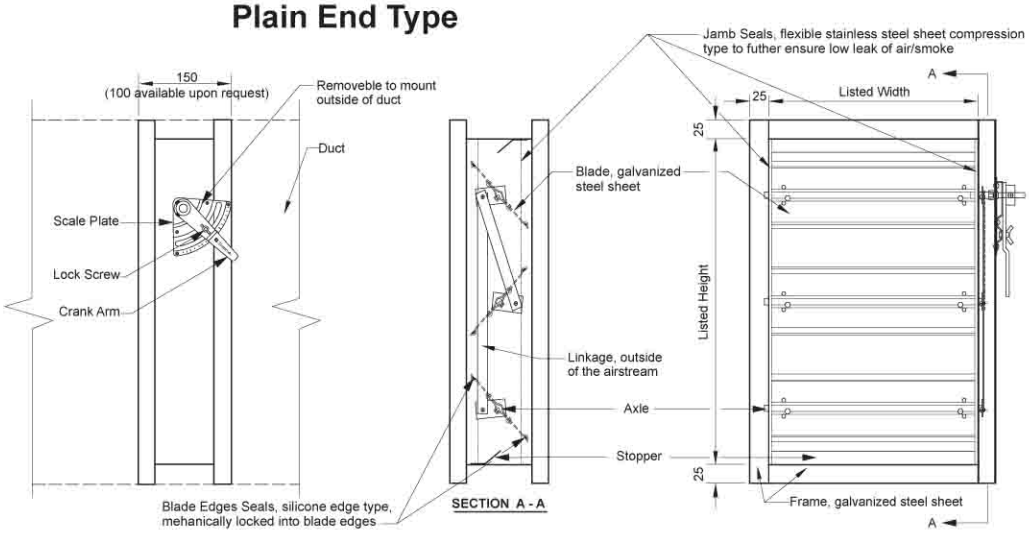

Plain End Type

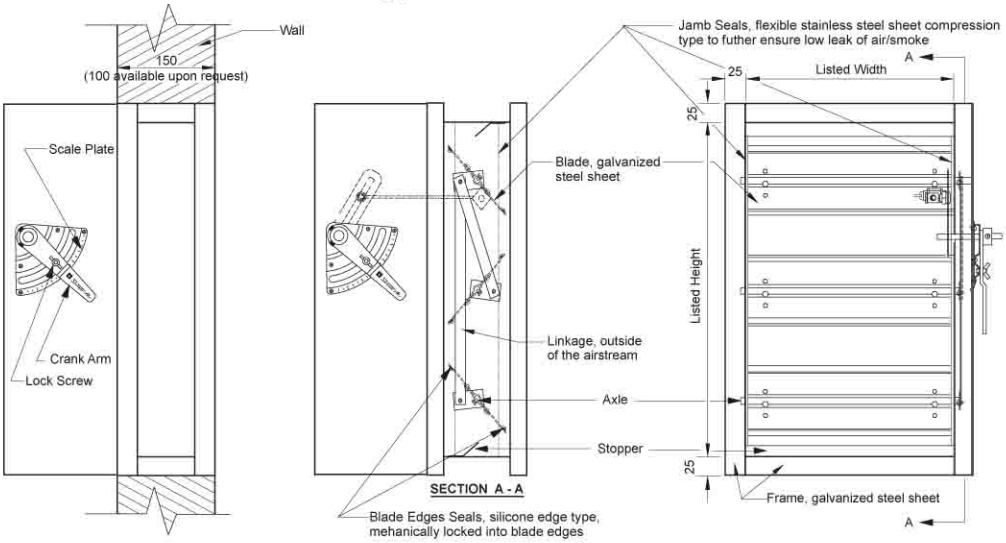

Constructed of galvanized steel sheet, rectangular shaped, high strength structure. Linkage designed to be outside of airstream (concealed in frame). Blade edge seals are silicone edge type, mechanically locked into blade edges. Jamb seals are flexible stainless steel sheet compression type to further ensure low leak of air/smoke with Test Certificate in accordance with Underwriters Laboratories Inc. (UL),UL555S, Classification II (Air/Smoke leakage shall be not greater than 10 CFM/ft^2 at pressure difference 1 in.wg., or 20 CFM/ft^2 at pressure difference 4 in.wg.). Blade(s) can be adjusted manually from full open to full close in opposed pattern for high effectiveness in air volume control performance. Lockable crank arm for manual adjusting the blade(s) with scale plate in quadrant pattern for indicating the blade position setting are also completely equipped. Suitable for mounting to duct lines, building sidewalls or shafts to control volume of supply, exhaust or fresh air manually where low leak is seriously needed.

(Measurement : mm)

Motorized Damper

Type : MD

Flange Type

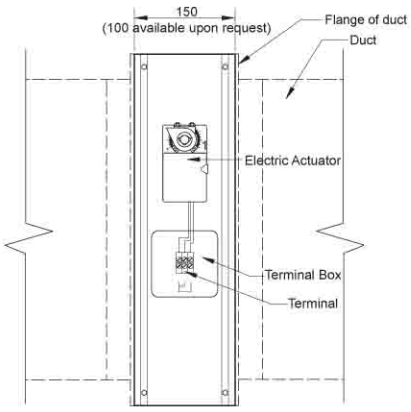

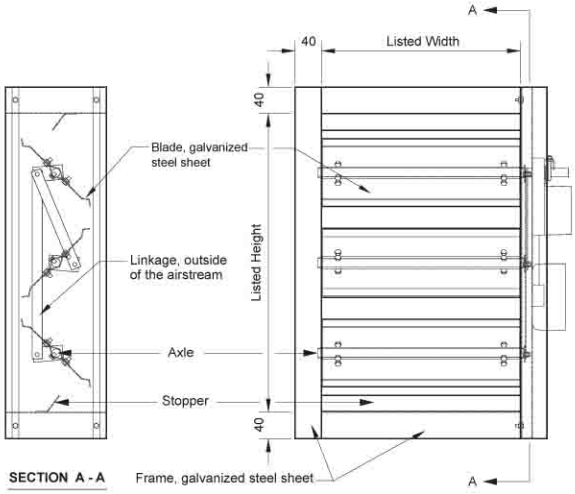

Plain End Type

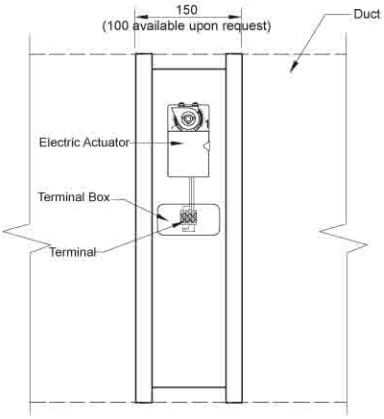

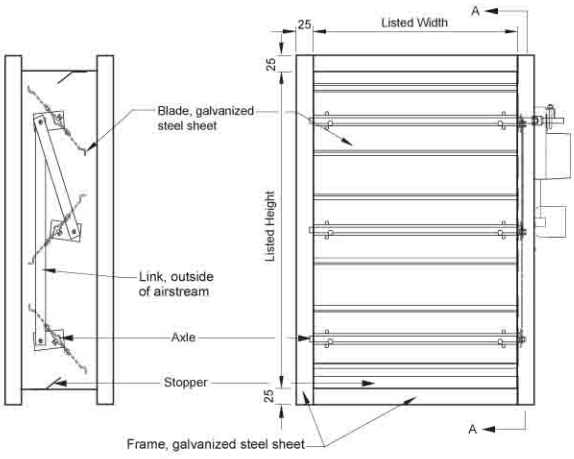

Plain End Type

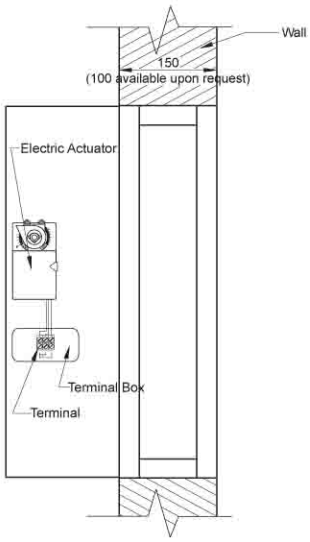

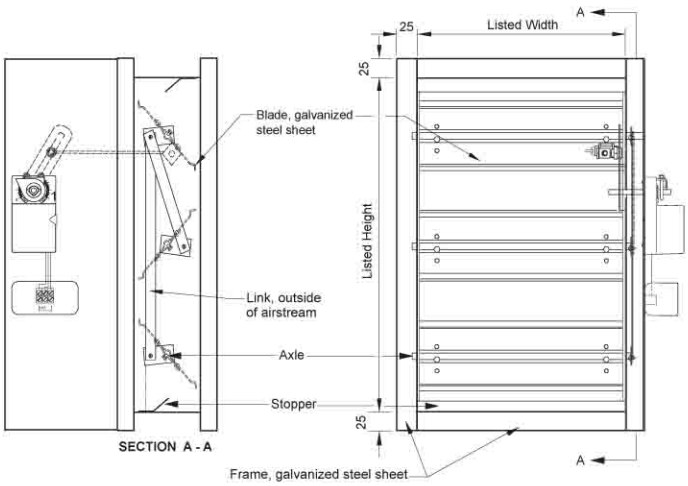

Constructed of galvanized steel sheet, rectangular shaped, high strength structure. Linkage designed to be outside of the airstream (concealed in frame). Blade(s) can be controlled automatically by electric actuator from full open to full close in opposed pattern for high effectiveness in air volume control performance. The electric actuator, wiring and terminal are also completely equipped. Suitable for mounting to duct lines, building sidewalls or shafts to control volume of supply, exhaust, fresh or pressurized air automatically.

(Measurement : mm)

Motorized Damper

Type : ML

Flange Type

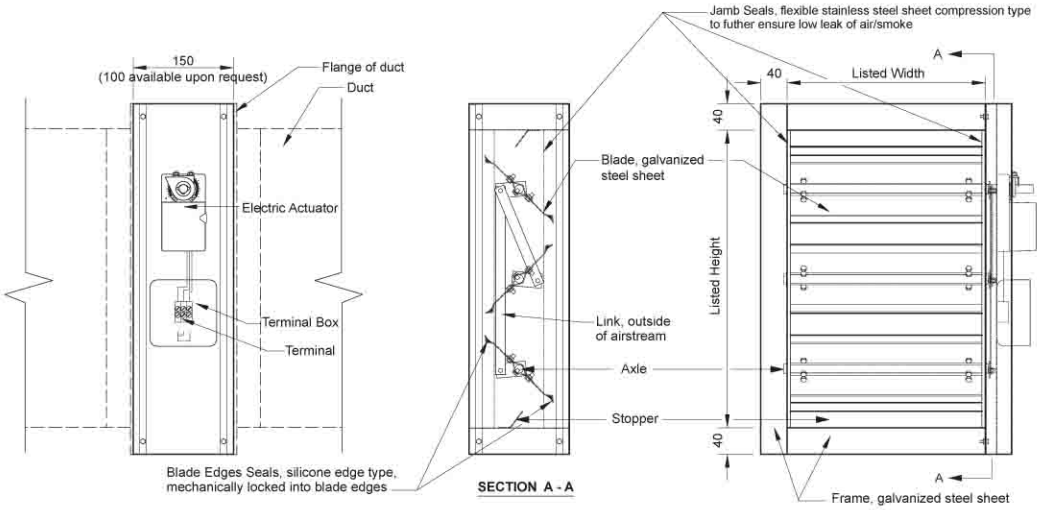

Plain End Type

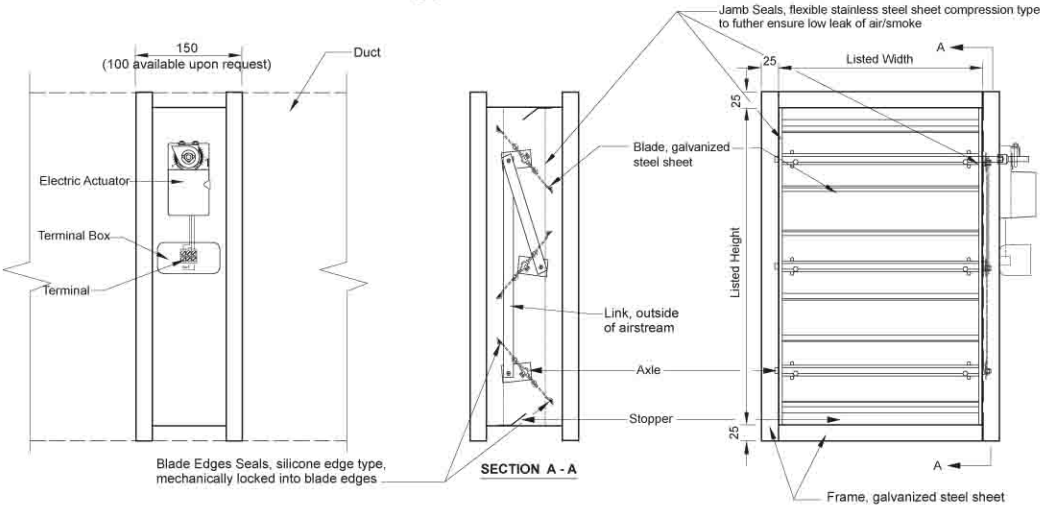

Plain End Type

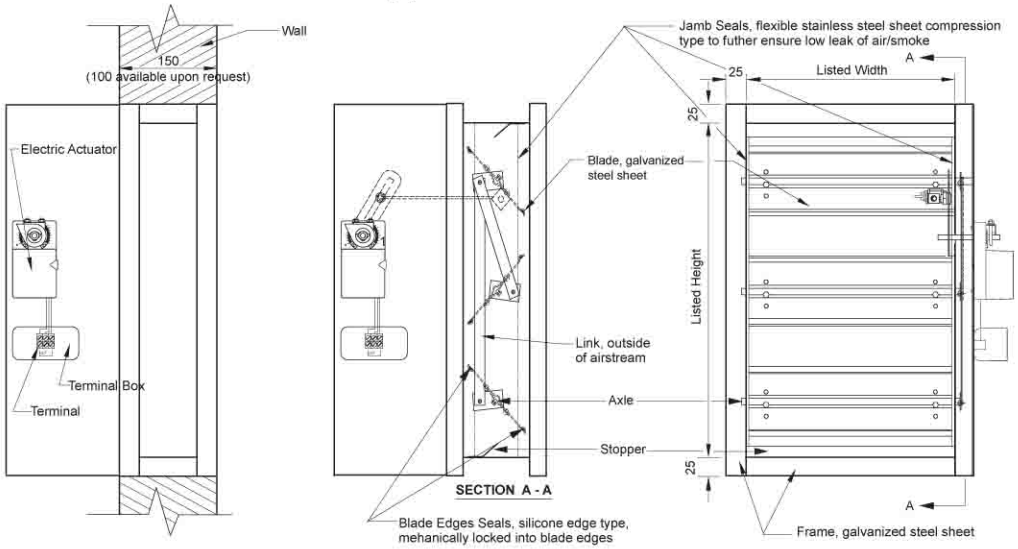

Constructed of galvanized steel sheet, rectangular shaped, high strength structure. Linkage designed to be outside of airstream (concealed in frame). Blade edge seals are silicone edge type, mechanically locked into blade edges. Jamb seals are flexible stainless steel sheet compression type to further ensure low leak of air/smoke with Test Certificate in accordance with Underwriters Laboratories Inc. (UL), UL555S, Classification II (Air/Smoke leakage shall be not greater than 10 CFM/ft^2 at pressure difference 1 in.wg., or 20 CFM/ft^2 at pressure difference 4 in.wg.). Blade(s) can be controlled automatically by electric actuator from full open to full close in opposed pattern for high effectiveness in air volume control performance. The electric actuator, wiring and terminal are also completely equipped. Suitable for mounting to duct lines, building sidewalls or shafts to control volume of supply, exhaust, fresh or pressurized air automatically where low leak is seriously needed.

(Measurement : mm)

Round Volume Damper

Ordinary

Type : RVD

Flange Type

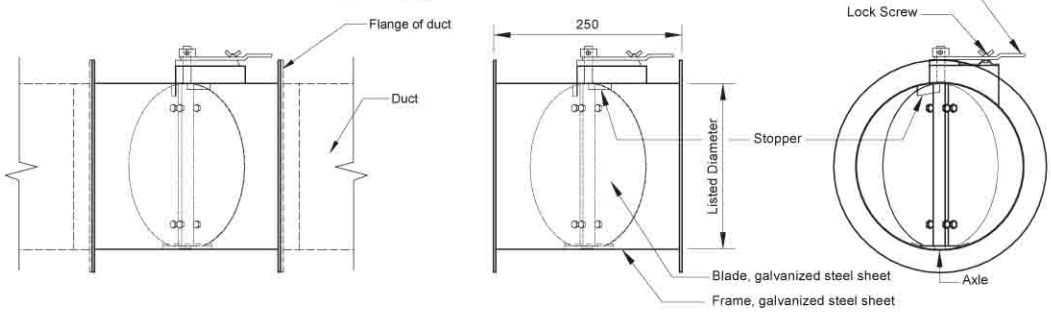

Plain End Type

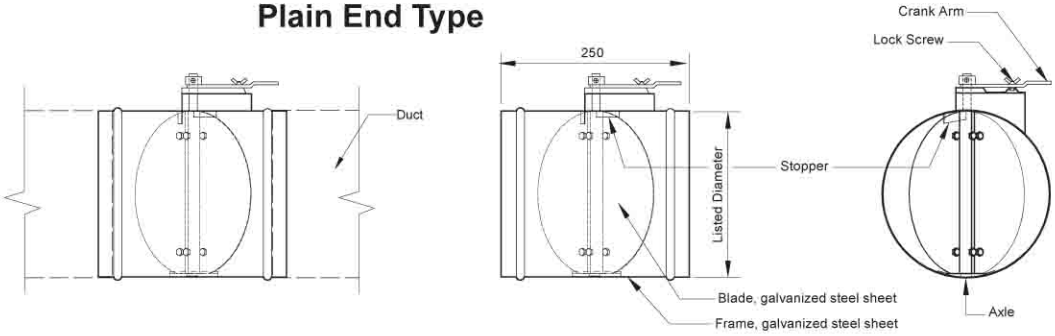

Constructed of galvanized steel sheet, round shaped, single round blade can be adjusted manually form full open to full close. Lockable crank arm for adjusting blade with scale plate in quadrant pattern for indicating the blade position setting are also completely equipped. Suitable for connecting between flexible ducts and diffuser/grille plenums to control volume of supply, exhaust or fresh air manually.

Low Leak

Type : RVL

Flange Type

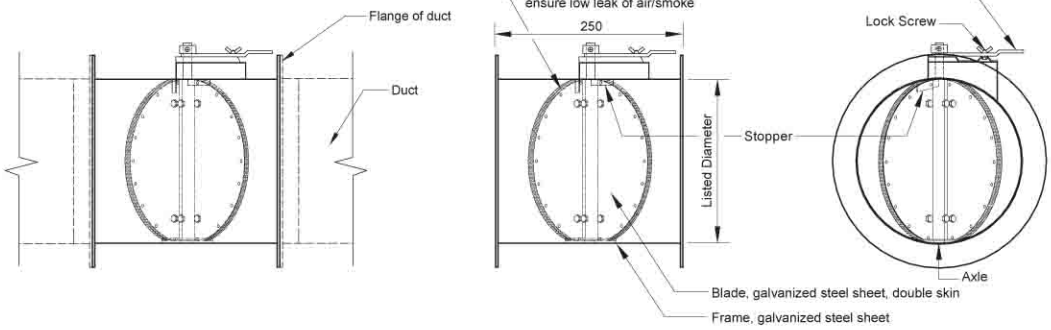

Plain End Type

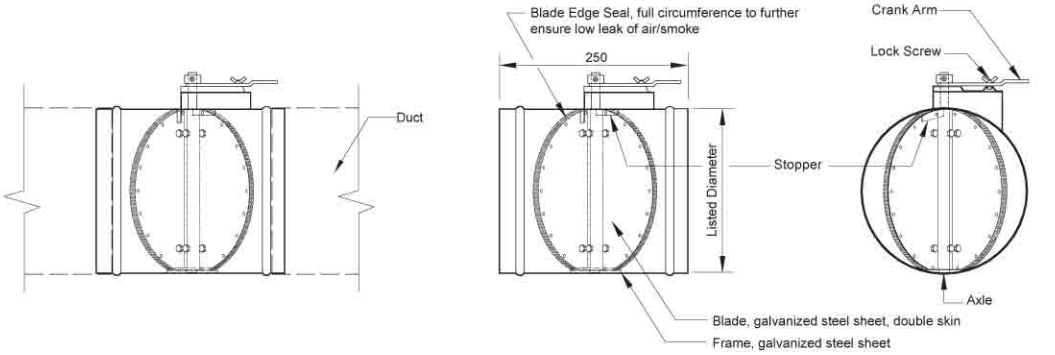

Constructed of galvanized steel sheet, round shaped, double skin single round blade with full circumference seal to further ensure low leak of air/smoke with Test Certificate in accordance with Underwriters Laboratories Inc. (UL), UL555S, Classification I (Air/Smoke leakage shall be not greater than 4 CFM/ft^2 at pressure difference 1 in.wg., or 8 CFM/ft^2 at pressure difference 4 in.wg.). Blade can be adjusted manually from full open to full close. Lockable crank arm for manual adjusting the blade with scale plate in quadrant pattern for indicating the blade position setting are also completely equipped. Suitable for connecting between flexible ducts and diffuser/grille plenums to control volume of supply, exhaust or fresh air manually where low leak is seriously needed.

(Measurement : mm)

Round Motorized Damper

Ordinary

Type : RMD

Flange Type

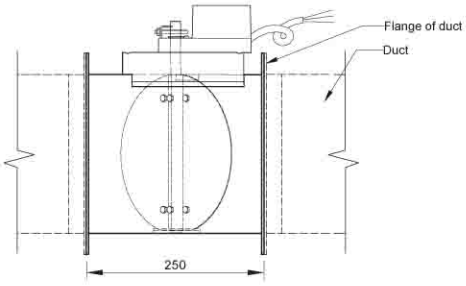

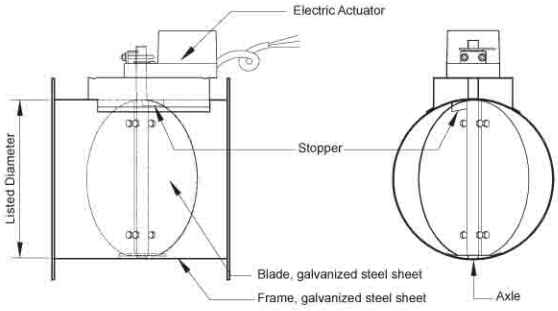

Plain End Type

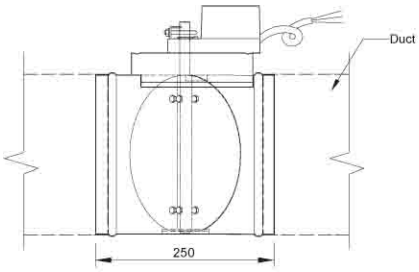

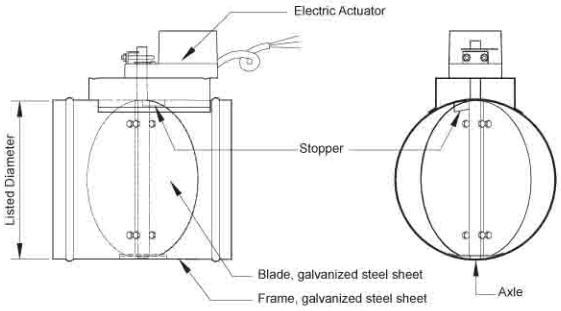

Constructed of galvanized steel sheet, round shaped, single round blade can be controlled automatically by electric actuator from full open to full close. The electric actuator, wiring and terminal are also completely equipped. Suitable for connecting between flexible ducts and diffuser/grille plenums to control volume of supply, exhaust or fresh air automatically.

Low Leak

Type : RML

Flange Type

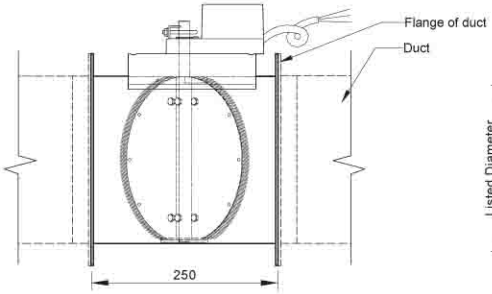

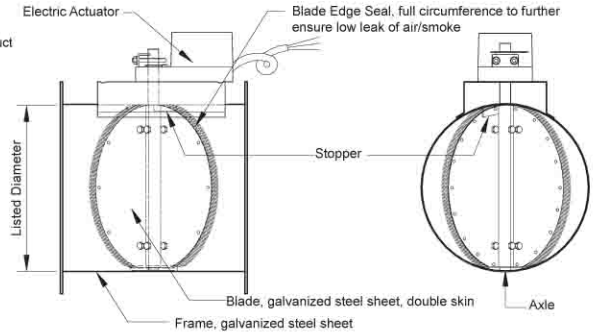

Plain End Type

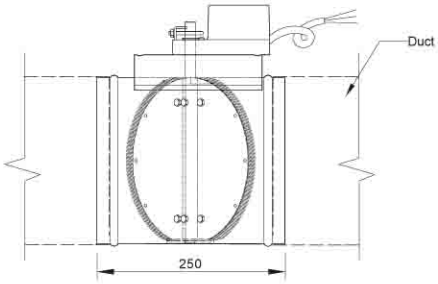

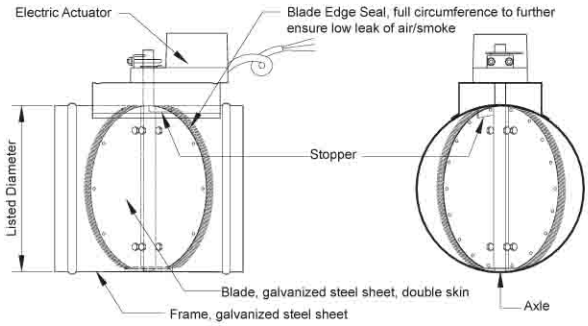

Constructed of galvanized steel sheet, round shaped, double skin single round blade with full circumference seal to further ensure low leak of air/smoke with Test Certificate in accordance with Underwriters Laboratories Inc. (UL), UL555S, Classification I (Air/Smoke leakage shall be not greater than 4 CFM/ft^2 at pressure difference 1 in.wg., or 8 CFM/ft^2 at pressure difference 4 in.wg.). Blade can be controlled automatically by electric actuator from full open to full close. The electric actuator, wiring and terminal are also completely equipped. Suitable for connecting between flexible ducts and diffuser/grille plenums to control volume of supply, exhaust or fresh air automatically where low leak is seriously needed.

(Measurement : mm)

Flat Oval Volume Damper

Ordinary

Type : OVD

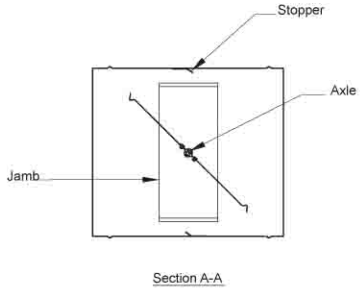

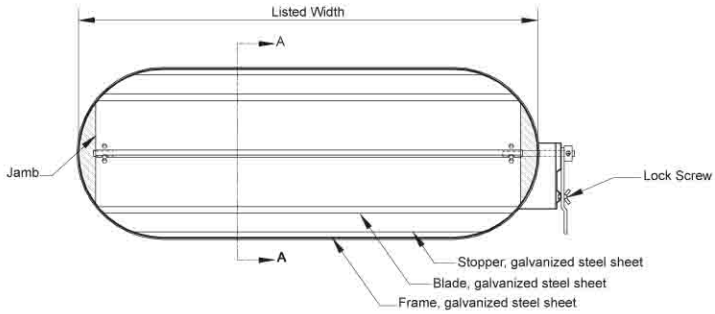

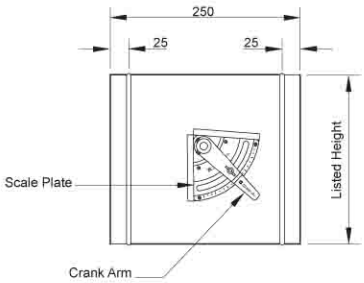

Constructed of galvanized steel sheet, flat oval shaped, single flat oval blade can be adjusted manually from full open to full close. Lockable crank arm for adjusting blade with scale plate in quadrant pattern for indicating the blade position settings are also completely equipped. Suitable for mounting to flat oval duct lines to control volume of supply, exhaust or fresh air manually.

Low Leak

Type : OVL

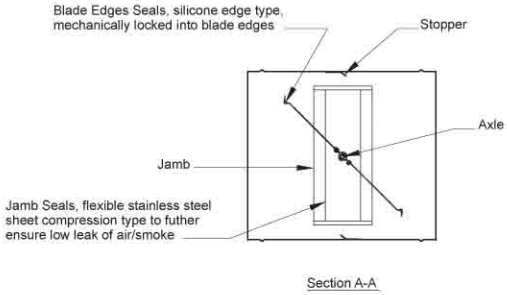

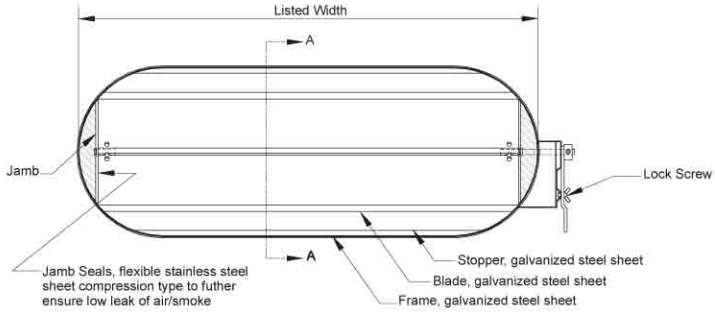

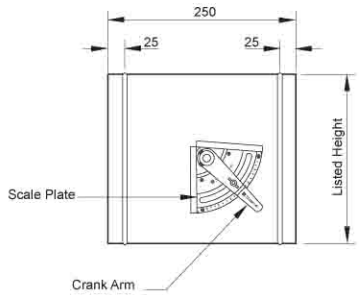

Constructed of galvanized steel sheet, flat oval shaped. Blade edge seals are silicone edge type, mechanically locked into blade edges. Jamb seals are flexible stainless steel sheet compression type to further ensure low leak of air/smoke with Test Certificate in accordance with Underwriters Laboratories Inc. (UL), UL555S, Classification II (Air/Smoke leakage shall be not greater than 10 CFM/ft^2 at pressure difference 1 in.wg., or 20 CFM/ft^2 at pressure difference 4 in.wg.). Single flat oval blade can be adjusted manually from full open to full close. Lockable crank arm for manual adjusting the blade with scale plate in quadrant pattern for indicating the blade position setting are also completely equipped. Suitable for mounting to flat oval duct lines to control volume of supply, exhaust or fresh air manually where low leak is seriously needed.

(Measurement : mm)

Flat Oval Motorized Damper

Ordinary

Type : OMD

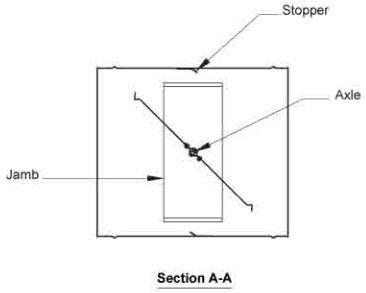

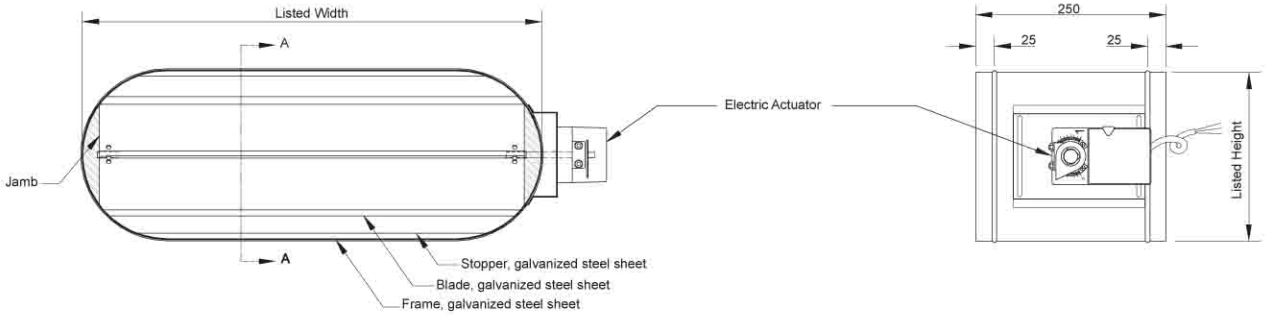

Constructed of galvanized steel sheet, flat oval shaped. Single flat oval blade can be controlled automatically by electric actuator from full open to full close. The electric actuator, wiring and terminal are also completely equipped. Suitable for mounting to flat oval duct lines to control volume of supply, exhaust or fresh air automatically.

Low Leak

Type : OML

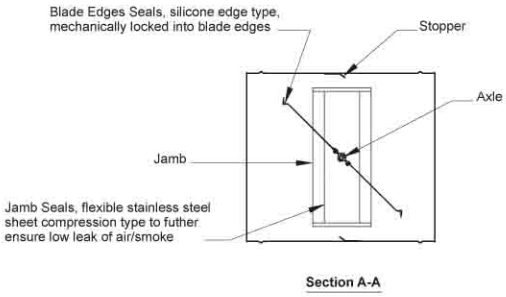

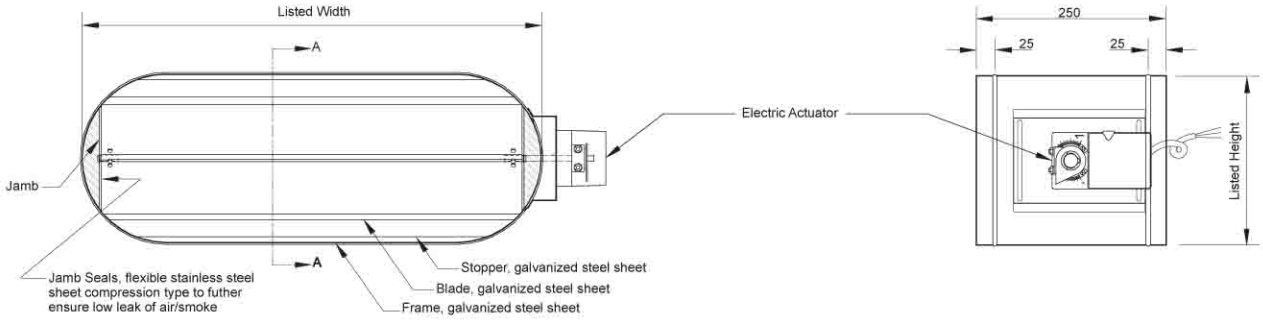

Constructed of galvanized steel sheet, flat oval shaped. Blade edge seals are silicone edge type, mechanically locked into blade edges. Jamb seals are flexible stainless steel sheet compression type to further ensure low leak of air/smoke with Test Certificate in accordance with Underwriters Laboratories Inc. (UL), UL555S, Classification II (Air/Smoke leakage shall be not greater than 10 CFM/ft^2 at pressure difference 1 in.wg., or 20 CFM/ft^2 at pressure difference 4 in.wg.). Single flat oval blade can be controlled automatically by electric actuator from full open to full close. The electric actuator, wiring and terminal are also completely equipped. Suitable for mounting to flat oval duct lines to control volume of supply, exhaust or fresh air automatically where low leak is seriously needed.

(Measurement : mm)

Gravity Damper

Type : GD

Flange Type

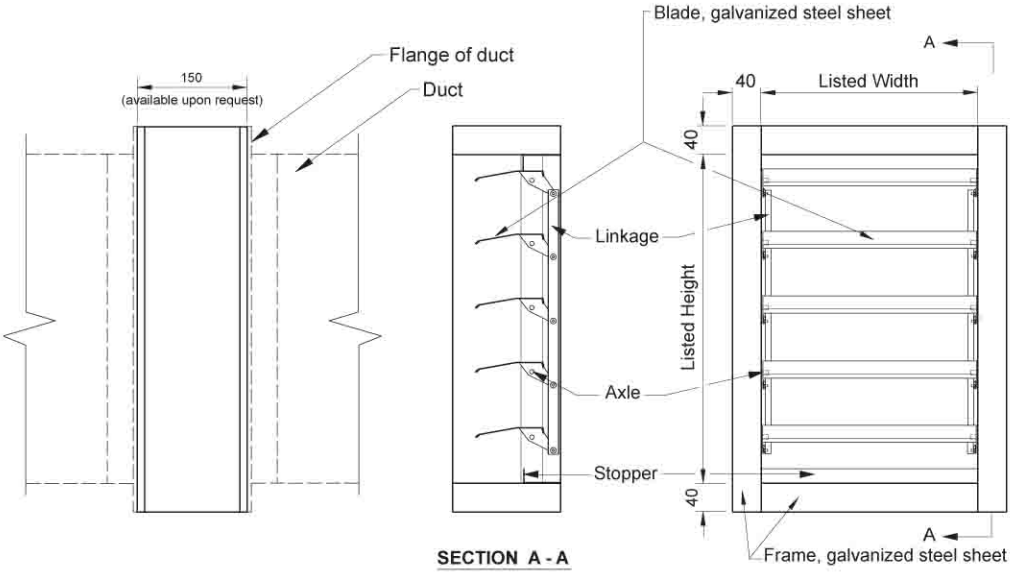

Plain End Type

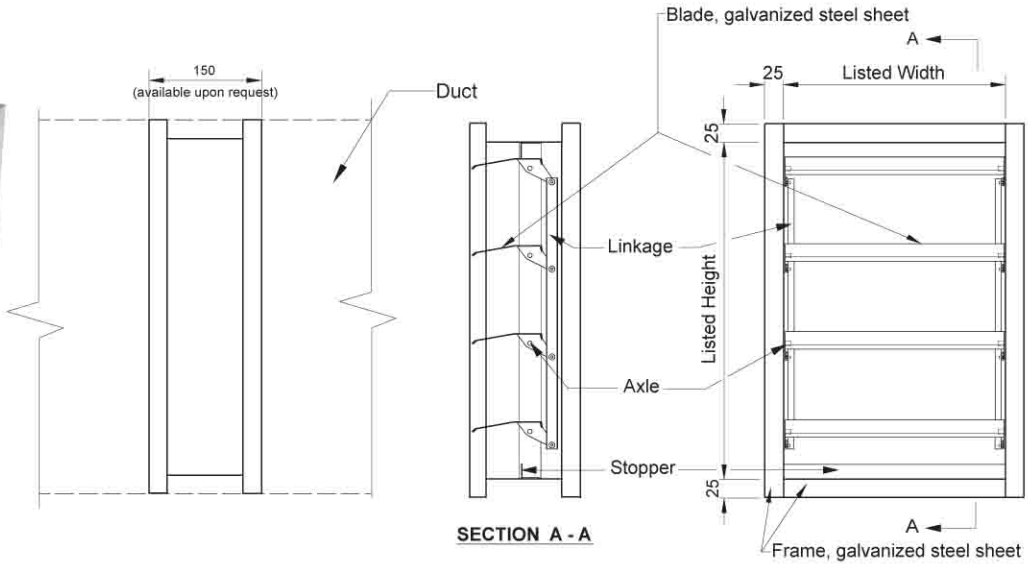

Constructed of galvanized steel sheet, rectangular shaped, high strength structure. Blade(s) will be automatically opened when air flows to same direction as opening of blade(s) by air pressure, and will be automatically closed when air not flows or flows to reverse direction by gravity. So installation must always be vertical (upright). Suitable for mounting to duct lines, front of AHU blowers or ventilating fans to control air flow to only one direction, preventing air flow in reverse direction.

(Measurement : mm)

Round Gravity Damper

Type : RGD

Flange Type

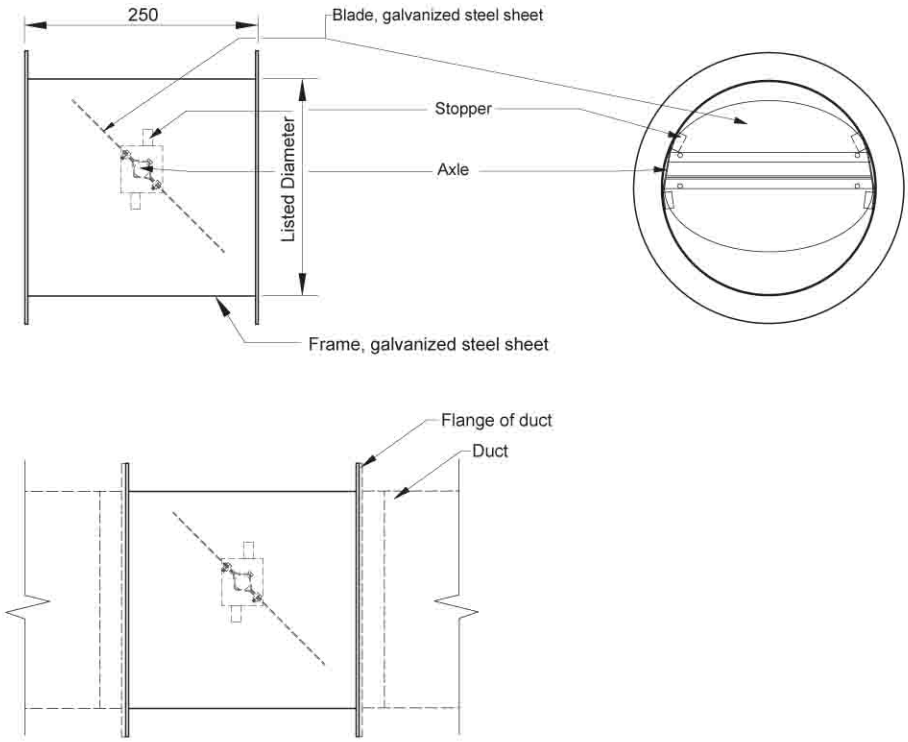

Plain End Type

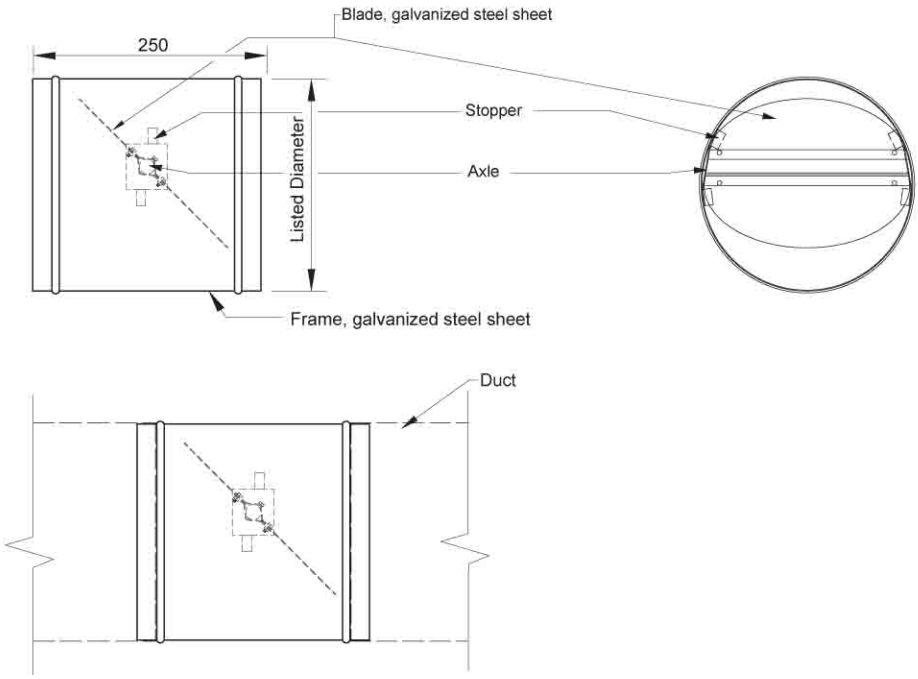

Constructed of galvanized steel sheet, round shaped, high strength structure. Single round blade (eccentric axle) will be automatically opened when air flows to same direction as opening of blade by air pressure, and will be automatically closed when air not flows or flows to reverse direction by gravity. So installation must always be vertical, the larger part of the blade must be lower part (upper part is the smaller part of the blade). Suitable for mounting to duct lines, front of AHU blowers or ventilating fans to control air flow to only one direction, preventing air flow in reverse direction.

(Measurement : mm)

Relief Damper

Type : RD

Flange Type

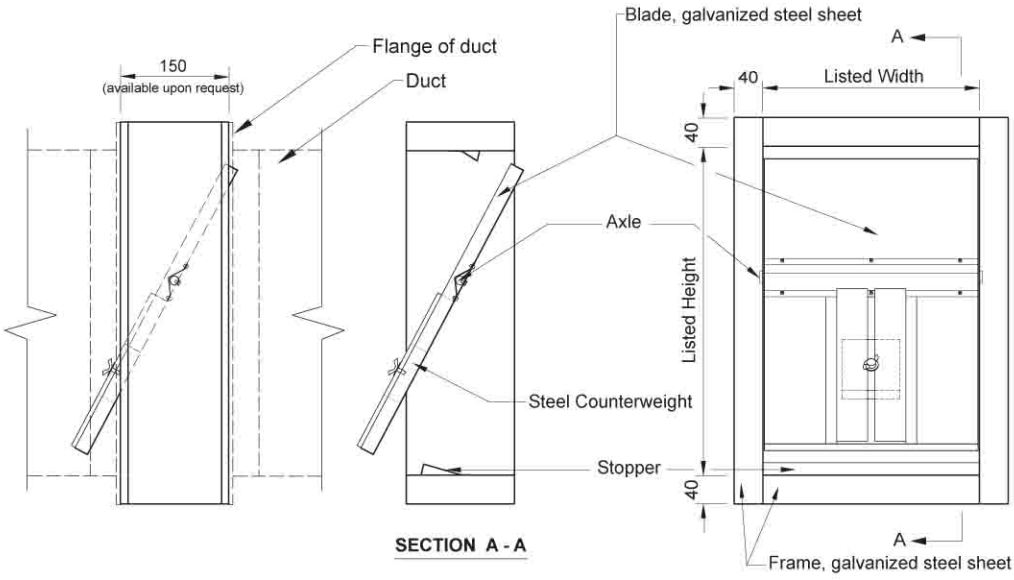

Plain End Type

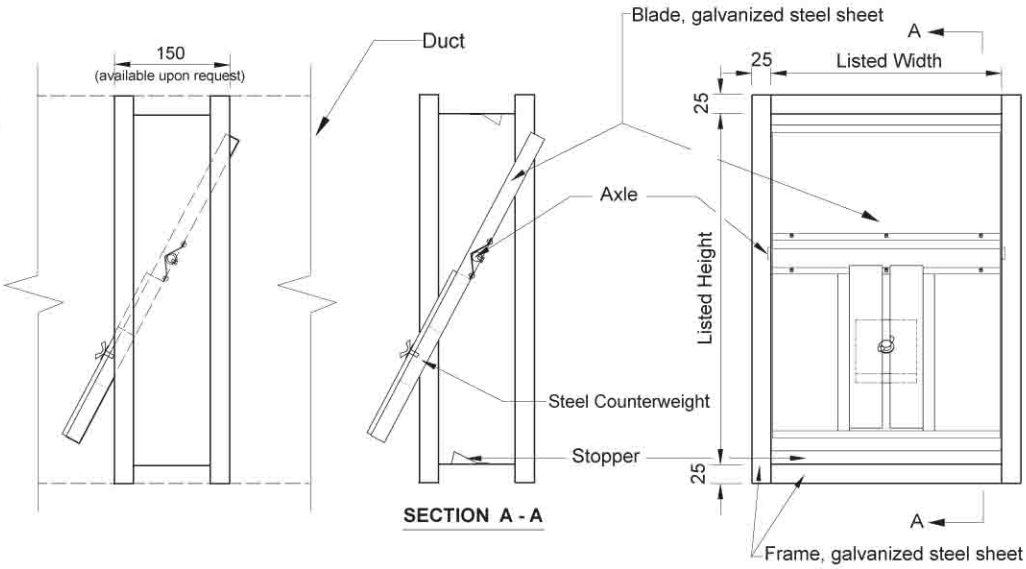

Constructed of galvanized steel sheet, rectangular shaped, high strength structure. Blade designed to be single blade and inclined position pattern, will be opened when air pressure is built up over the setting pressure, and will be closed when air pressure is under the setting pressure by adjusting (slide up-down, then lock) the steel counterweight (steel counterweight is also completely equipped). So installation must always be vertical (upright). Suitable for mounting to building sidewalls or shafts to control air pressure to be not exceed the specified pressure automatically.

(Measurement : mm)

Fire Damper

Type : FD

Flange Type

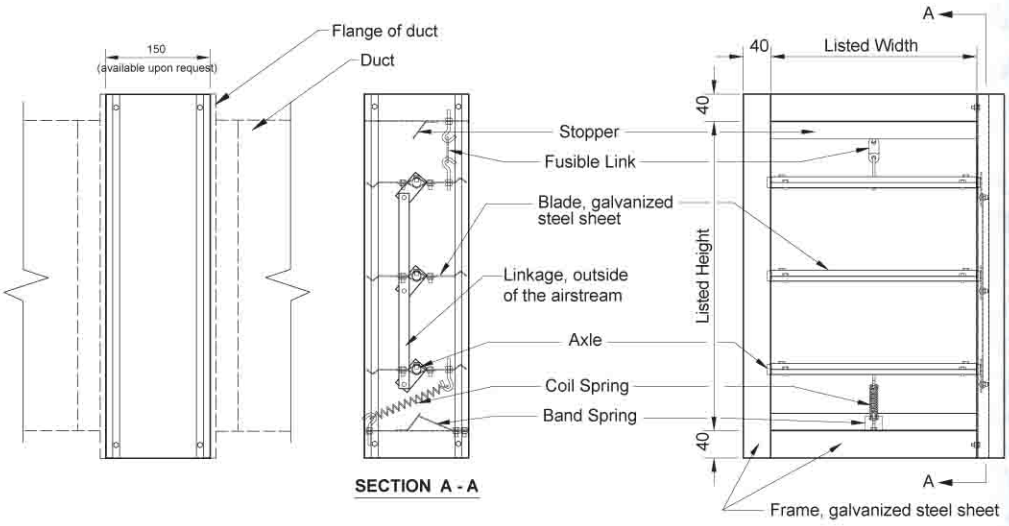

Plain End Type

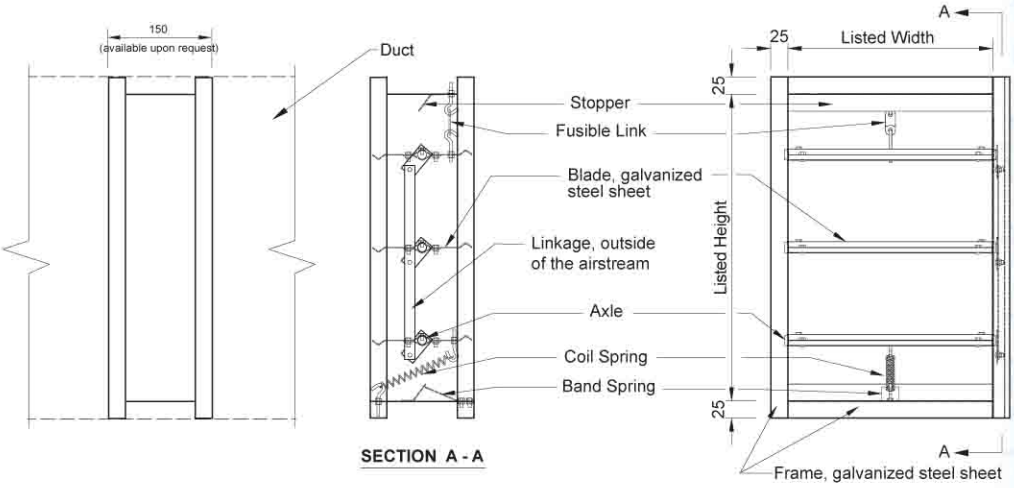

Constructed of galvanized steel sheet, rectangular shaped, high strength structure. Linkage designed to be outside of the airstream (concealed out side of the frame). It is 3 hour fire rating with Test Certificate in accordance with Underwriters Laboratories Inc., UL555, 3 Hour Fire Rating. Blade(s) are hold at full open position by fusible link UL Listed 165°F (74°C) temperature rating. Blade(s) will be automatically closed by coil spring force when fusible link break-away (when ambient temperature reaches temperature rating of the fusible link), and automatically locked immediately by flat bar spring. The fusible links are also completely equipped. So it is versatile installation in any position. When installation to duct lines, should provide an access doors at nearest of the damper for checking and servicing purposes. Suitable for mounting to or in duct lines, installed through openings in wall partitions or floors to prevent fire transfer through the opennings in walls partitions or floors.

(Measurement : mm)

Fire Damper, Curtain Type

Type : FDC

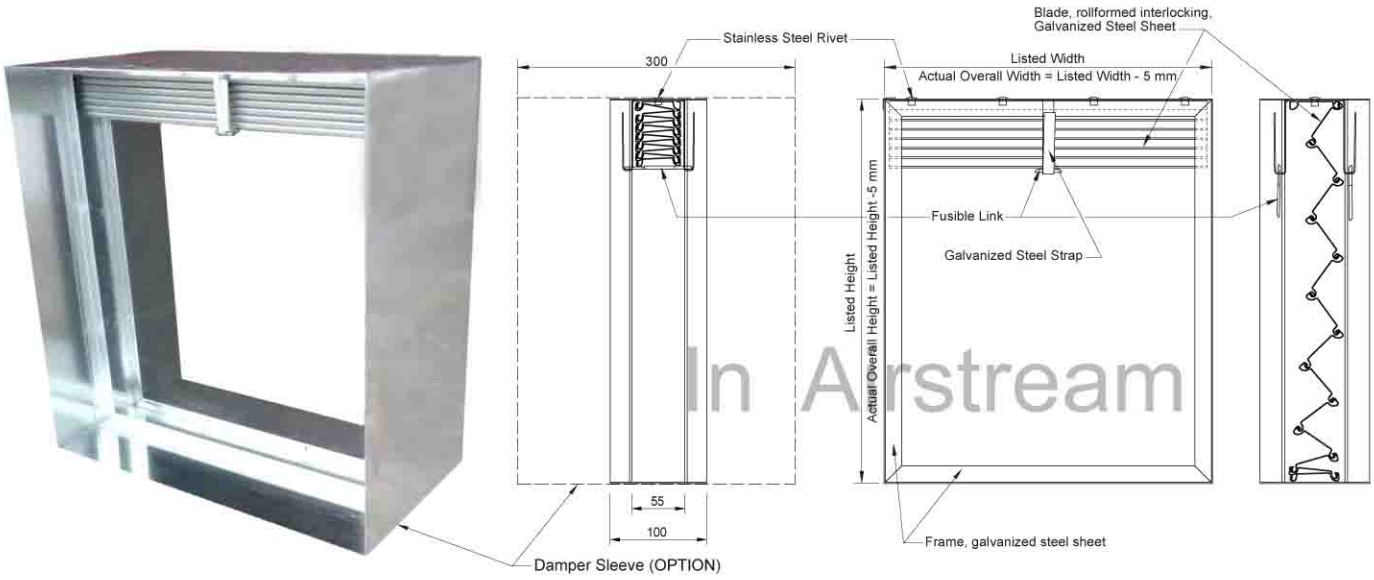

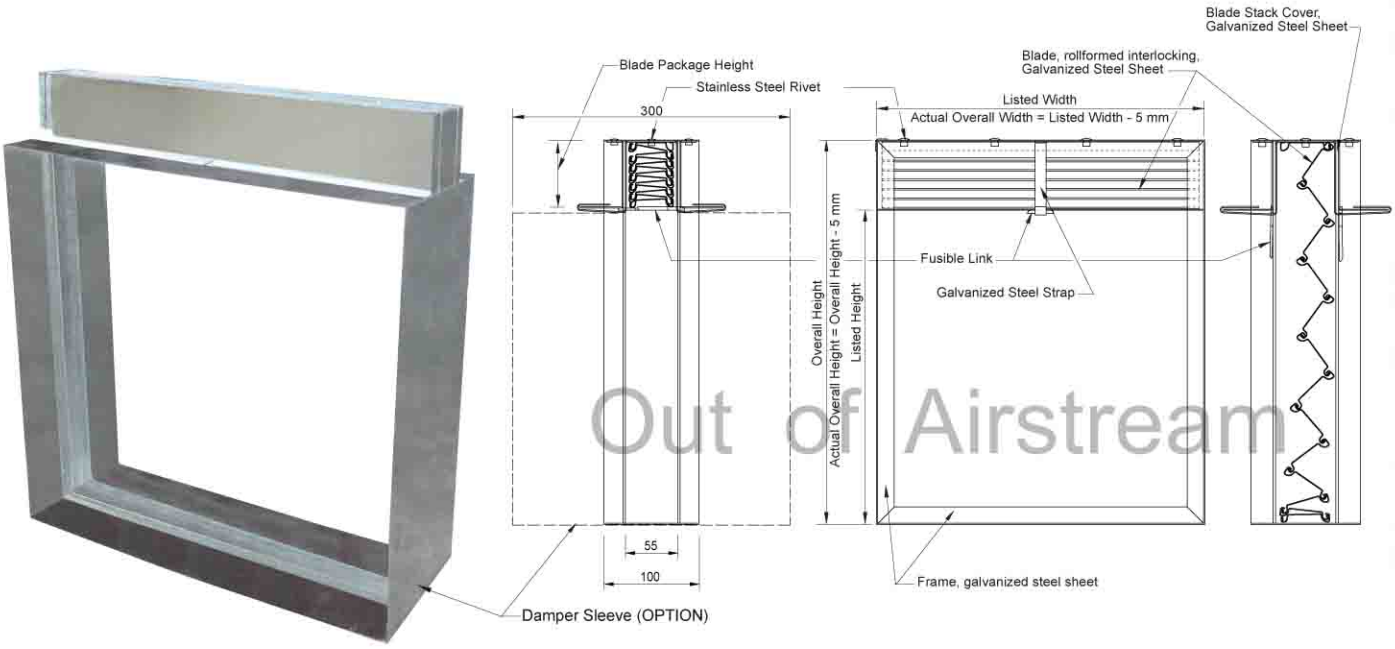

Constructed of galvanized steel sheet, rectangular shaped, high strength structure, Constructed and tested in accordance with UL555, UL classified 3 hour fire rating. Blade are opened and hold at full open position by fusible link UL Listed 165°F (74°F) temperature rating. Blades will be automatically closed by gravity when the fusible link break-away (when ambient temperature reaches temperature rating of the fusible link). It is designed to be used for Vertical installation only, both Static and Dynamic Systems. In Airstream and Out of Airstream, Single Section and Multiple Section are available upon request.

Suitable for mounting in duct lines installed through openings in walls or partitions to prevent fire transfer the openings in walls or partitions. It is strongly recommended that steel sleeves with full-perimeter steel retaining angles need to be ordered (OPTION) together with the dampers to ensure appropriate installation.

(Measurement : mm)

Fire/Smoke Damper

Type : FSD

Flange Type

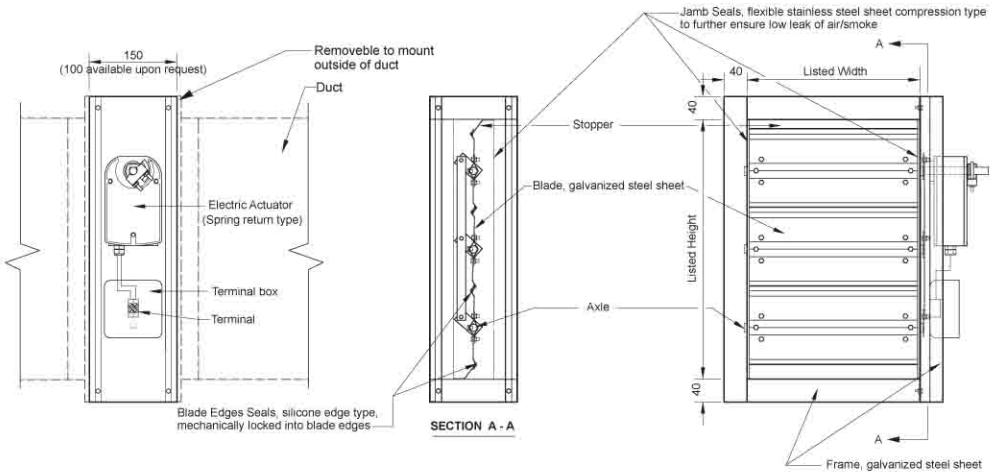

Plain End Type

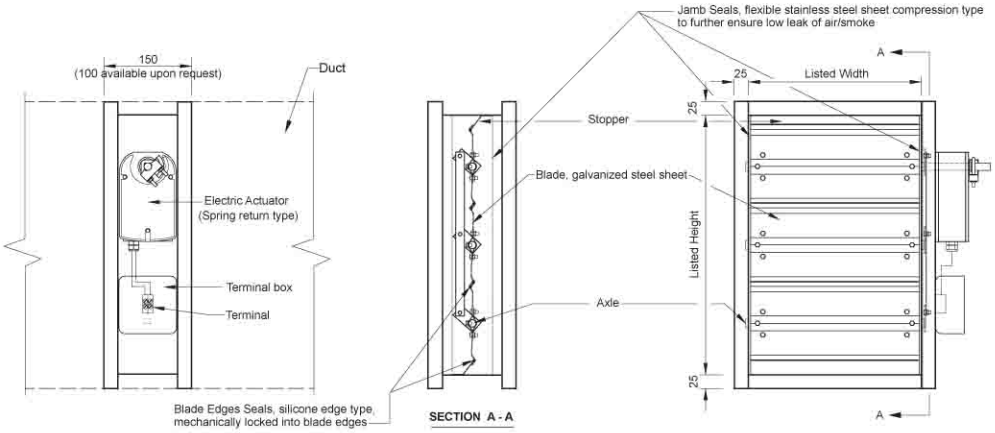

Plain End Type

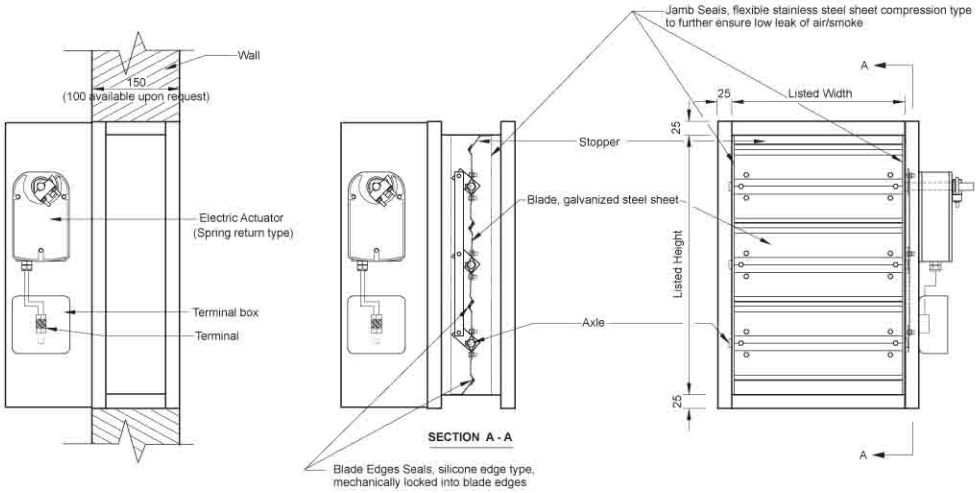

Constructed of galvanized steel sheet, rectangular shaped, high strength structure, flange type. Linkage designed to be outside of the airstream (concealed in frame). Blade edge seals are silicone edge type, mechanically locked into blade edges. Jamb seals are flexible stainless steel sheet compression type to further ensure low leakage of air/smoke. It is 3 hour fire rating and Classification II leakage as well with Test Certificate in accordance with Underwriters Laboratories Inc. (UL), UL555, 3 Hour Fire Rating, and UL555S, Classification II (Air/Smoke leakage shall be not greater than 10 CFM/ft^2 at pressure difference 1 in.wg., or 20 CFM/ft^2 at pressure difference 4 in.wg.). Blade(s) are hold at full open position by the electric actuator, spring return type. Blade(s) will be automatically closed and locked within 20 seconds during fire conditions, smoke detection or power failure through the actuator closure springs. The electric actuators, spring return type, wiring and terminals are also completely equipped. Suitable for mounting to duct lines installed through openings in wall, partitions or floors to prevent fire/smoke transfer through the openings in walls, partitions or floors.

(Measurement : mm)

Duct Silencer

Type : DS

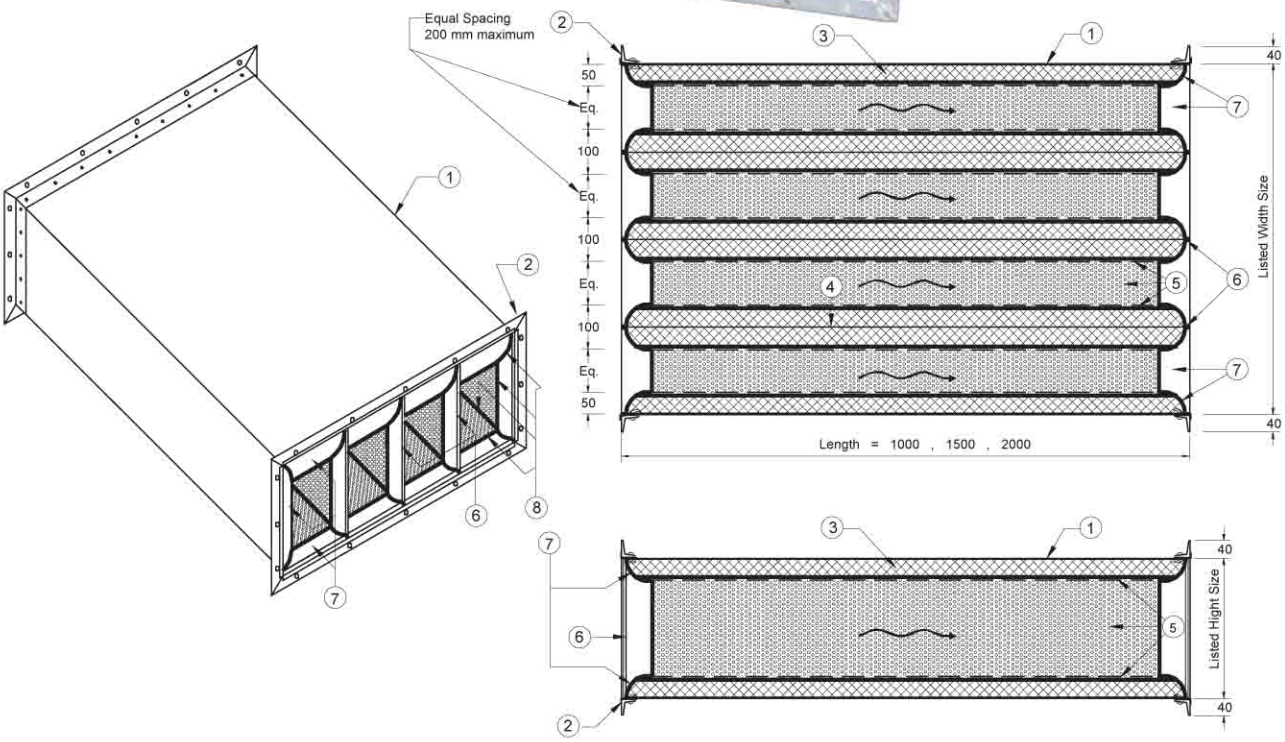

Constructed of galvanized steel sheet, rectangular shaped, high strength structure, flange type. All inside casing as well as flat panel baffle(s) are lined by fiberglass insulation 48 kg/m³ dense, 50 mm thick with glass cloth facing and covered with perforated galvanized steel sheet for protecting all fiberglass surfaces from erosion. Both ends of flat panel baffle(s) and all edges of fiberglass at entrance and exit of duct silencer are covered with galvanized steel sheet for protecting all fiber glass edges. All joints of perforated galvanized steel sheets, all joints between solid rounded noses, solid bell mouths and perforated galvanized steel sheets are sealed by silicone sealant to further ensure full protection of all fiberglass edges. High Dynamic Insertion Loss, Low Static Pressure Drop with Test Certificate in accordance with Standards Australia (AS), AS 1277. Suitable for mounting to rectangular duct line or generator set room sidewall for noise reduction from its noise source effectively.

FEATURES

1. Casing, constructed of galvanized steel sheet.
2. Flanges, constructed of steel angle bar, riveted to casing and attached to small flange formed from the casing edge to ensure rigidity and without leakage.
3. Internal liner, all inside casing are lined by fiberglass insulation 48 kg/m³ dense, 50 mm thick with glass cloth facing.
4. Acoustic Flat Panel Baffle(s), constructed of galvanized steel sheet covered with fiberglass insulation 48 kg/m³ dense, 50 mm thick with glass cloth facing around the galvanized steel sheet. The width of acoustic flat panel baffle(s) spacing for air passages in range of 125-175 mm
5. Perforated Sheets, all surfaces of fiberglass with glass cloth facing are covered by perforated galvanized steel sheet for protecting all fiberglass surfaces from erosion.
6. Solid Rounded Noses, both ends of acoustic flat panel baffle(s) are covered with galvanized steel sheet as solid rounded noses for protecting all fiberglass edges and increasing noise reduction.
7. Solid Bell Mouths, all edges of fiberglass at entrance and exit of rectangular duct silencer are covered with galvanized steel sheet as solid bell mouths for protecting all fiberglass edges and minimizing air turbulence.
8. Silicone Sealants, sealed all joints of perforated galvanized steel sheets, all joints between solid rounded noses, solid bell mouths and perforated galvanized steel sheets to further ensure full protection of all fiberglass edges.

(Measurement : mm)

Duct Silencer

Type : DS

Dynamic Insertion Loss Data

Length	Outlet Velocity	Octave Band Centre Frequency - Hz							
		63	125	250	500	1000	2000	4000	8000
m (ft)	MPS (FPM)	Dynamic Insertion Loss - dB							
1.0 (3.28)	3.409 (671)	1	8	12	28	37	35	22	17
	5.682 (1119)	2	8	11	27	36	34	22	17
	7.955 (1566)	1	8	11	27	36	34	21	17
1.5 (4.92)	3.409 (671)	4	10	18	41	44	45	32	25
	5.682 (1119)	4	11	17	42	43	44	33	25
	7.955 (1566)	4	11	18	41	44	44	32	25
2.0 (6.56)	3.409 (671)	5	13	24	47	46	48	38	31
	5.682 (1119)	5	12	24	47	46	48	39	32
	7.955 (1566)	5	13	23	46	47	48	39	32

Duct Silencer

Type : DS

Performance Data

Listed Size		Outlet Velocity MPS (FPM)	3 (591)	4 (787)	5 (984)	6 (1181)	7 (1378)	8 (1575)
mm	inches	Length - m (ft)	Static Pressure Drop, Ps - Pa (in.wg.)					
		1.0 (3.28)	0.0 (0.000)	0.3 (0.001)	0.7 (0.003)	1.1 (0.004)	1.6 (0.006)	2.0 (0.008)
		1.5 (4.92)	0.0 (0.000)	1.2 (0.005)	2.3 (0.009)	3.3 (0.013)	4.2 (0.017)	5.0 (0.020)
(Ak - m^2)	(Ak - ft^2)	2.0 (6.56)	0.6 (0.002)	1.8 (0.007)	3.5 (0.014)	5.8 (0.023)	8.7 (0.035)	12.2 (0.049)
450 x 450 (0.088)	18" x 18" (0.947)	CMS (CFM)	0.264 (560)	0.352 (745)	0.440 (932)	0.528 (1118)	0.616 (1305)	0.704 (1492)
600 x 300 (0.080)	24" x 12" (0.861)	CMS (CFM)	0.240 (509)	0.320 (678)	0.400 (847)	0.480 (1017)	0.560 (1186)	0.640 (1356)
700 x 400 (0.120)	28" x 16" (1.292)	CMS (CFM)	0.360 (764)	0.480 (1017)	0.600 (1271)	0.720 (1526)	0.840 (1780)	0.960 (2035)
800 x 400 (0.150)	32" x 16" (1.615)	CMS (CFM)	0.450 (954)	0.600 (1271)	0.750 (1589)	0.900 (1907)	1.050 (2225)	1.200 (2544)
800 x 500 (0.200)	32" x 20" (2.153)	CMS (CFM)	0.600 (1272)	0.800 (1694)	1.000 (2119)	1.200 (2543)	1.400 (2967)	1.600 (3391)
900 x 500 (0.200)	36" x 20" (2.153)	CMS (CFM)	0.600 (1272)	0.800 (1694)	1.000 (2119)	1.200 (2543)	1.400 (2967)	1.600 (3391)
900 x 600 (0.250)	36" x 24" (2.691)	CMS (CFM)	0.750 (1590)	1.000 (2118)	1.250 (2648)	1.500 (3178)	1.750 (3708)	2.000 (4238)
1000 x 500 (0.240)	40" x 20" (2.583)	CMS (CFM)	0.720 (1527)	0.960 (2033)	1.200 (2542)	1.440 (3051)	1.680 (3559)	1.920 (4068)
1000 x 600 (0.300)	40" x 24" (3.229)	CMS (CFM)	0.900 (1908)	1.200 (2541)	1.500 (3177)	1.800 (3813)	2.100 (4450)	2.400 (5086)
1000 x 750 (0.390)	40" x 30" (4.198)	CMS (CFM)	1.170 (2481)	1.560 (3304)	1.950 (4131)	2.340 (4958)	2.730 (5785)	3.120 (6612)
1100 x 600 (0.350)	44" x 24" (3.767)	CMS (CFM)	1.050 (2226)	1.400 (2965)	1.750 (3707)	2.100 (4449)	2.450 (5191)	2.800 (5933)
1100 x 750 (0.455)	44" x 30" (4.898)	CMS (CFM)	1.365 (2895)	1.820 (3855)	2.275 (4820)	2.730 (5785)	3.185 (6749)	3.640 (7714)
1100 x 900 (0.560)	44" x 36" (6.028)	CMS (CFM)	1.680 (3563)	2.240 (4744)	2.800 (5932)	3.360 (7119)	3.920 (8307)	4.480 (9494)
1200 x 600 (0.350)	48" x 24" (3.767)	CMS (CFM)	1.050 (2226)	1.400 (2965)	1.750 (3707)	2.100 (4449)	2.450 (5191)	2.800 (5933)
1200 x 750 (0.455)	48" x 30" (4.898)	CMS (CFM)	1.365 (2895)	1.820 (3855)	2.275 (4820)	2.730 (5785)	3.185 (6749)	3.640 (7714)
1200 x 900 (0.56)	48" x 36" (6.028)	CMS (CFM)	1.680 (3563)	2.240 (4744)	2.800 (5932)	3.360 (7119)	3.920 (8307)	4.480 (9494)
1350 x 750 (0.553)	54" x 30" (5.952)	CMS (CFM)	1.659 (3518)	2.212 (4684)	2.765 (5857)	3.318 (7029)	3.871 (8202)	4.424 (9374)
1350 x 900 (0.680)	54" x 36" (7.319)	CMS (CFM)	2.040 (4326)	2.720 (5760)	3.400 (7202)	4.080 (8644)	4.760 (10086)	5.440 (11527)
1350 x 1000 (0.765)	54" x 40" (8.234)	CMS (CFM)	2.295 (4866)	3.060 (6480)	3.825 (8102)	4.590 (9724)	5.355 (11346)	6.120 (12969)
1500 x 900 (0.720)	60" x 36" (7.750)	CMS (CFM)	2.160 (4580)	2.880 (6099)	3.600 (7626)	4.320 (9153)	5.040 (10680)	5.760 (12206)
1500 x 1000 (0.810)	60" x 40" (8.719)	CMS (CFM)	2.430 (5153)	3.240 (6862)	4.050 (8579)	4.860 (10297)	5.670 (12015)	6.480 (13732)
1500 x 1050 (0.855)	60" x 42" (9.203)	CMS (CFM)	2.565 (5439)	3.420 (7243)	4.275 (9056)	5.130 (10869)	5.985 (12682)	6.840 (14495)
1500 x 1200 (0.990)	60" x 48" (10.656)	CMS (CFM)	2.970 (6298)	3.960 (8386)	4.950 (10486)	5.940 (12585)	6.930 (14684)	7.920 (16783)
1650 x 1000 (0.945)	66" x 40" (10.172)	CMS (CFM)	2.835 (6012)	3.780 (8005)	4.725 (10009)	5.670 (12013)	6.615 (14017)	7.560 (16021)
1650 x 1050 (0.998)	66" x 42" (10.742)	CMS (CFM)	2.994 (6349)	3.992 (8454)	4.990 (10570)	5.988 (12686)	6.986 (14802)	7.984 (16919)
1650 x 1200 (1.155)	66" x 48" (12.432)	CMS (CFM)	3.465 (7347)	4.620 (9784)	5.775 (12233)	6.930 (14682)	8.085 (17131)	9.240 (19580)
1800 x 1200 (1.210)	72" x 48" (13.024)	CMS (CFM)	3.630 (7697)	4.840 (10250)	6.050 (12816)	7.260 (15381)	8.470 (17947)	9.680 (20513)
1800 x 1350 (1.375)	72" x 54" (14.800)	CMS (CFM)	4.125 (8747)	5.500 (11648)	6.875 (14563)	8.250 (17479)	9.625 (20394)	11.000 (23310)
1800 x 1500 (1.540)	72" x 60" (16.576)	CMS (CFM)	4.620 (9796)	6.160 (13045)	7.700 (16311)	9.240 (19576)	10.780 (22842)	12.320 (26107)
2000 x 1350 (1.500)	80" x 54" (16.146)	CMS (CFM)	4.500 (9542)	6.000 (12707)	7.500 (15888)	9.000 (19068)	10.500 (22249)	12.000 (25430)
2000 x 1500 (1.680)	80" x 60" (18.083)	CMS (CFM)	5.040 (10687)	6.720 (14231)	8.400 (17794)	10.080 (21356)	11.760 (24918)	13.440 (28481)

Duct Silencer

Type : DS

Physical Data

Listed Size		Length - m (ft)					
		1.0 (3.28)		1.5 (4.92)		2.0 (6.56)	
mm	inches	Weight kgs (lbs)	Volume m^3 (ft^3)	Weight kgs (lbs)	Volume m^3 (ft^3)	Weight kgs (lbs)	Volume m^3 (ft^3)
450 x 450	18" x 18"	36 (79)	0.2 (7)	50 (110)	0.3 (11)	64 (141)	0.4 (15)
600 x 300	24" x 12"	33 (73)	0.2 (7)	46 (101)	0.3 (10)	59 (130)	0.4 (13)
700 x 400	28" x 16"	47 (104)	0.3 (10)	65 (143)	0.4 (15)	79 (174)	0.6 (20)
800 x 400	32" x 16"	50 (110)	0.3 (12)	70 (154)	0.5 (17)	89 (196)	0.6 (23)
800 x 500	32" x 20"	56 (123)	0.4 (15)	73 (161)	0.6 (22)	90 (198)	0.8 (29)
900 x 500	36" x 20"	67 (148)	0.5 (16)	94 (207)	0.7 (25)	121 (267)	0.9 (33)
900 x 600	36" x 24"	75 (165)	0.5 (20)	106 (234)	0.8 (30)	136 (300)	1.1 (39)
1000 x 500	40" x 20"	70 (154)	0.5 (18)	99 (218)	0.8 (27)	127 (280)	1.0 (36)
1000 x 600	40" x 24"	78 (172)	0.6 (22)	110 (243)	0.9 (33)	141 (311)	1.2 (44)
1000 x 750	40" x 30"	90 (198)	0.8 (27)	127 (280)	1.1 (41)	164 (362)	1.5 (55)
1100 x 600	44" x 24"	80 (176)	0.7 (24)	114 (251)	1.0 (36)	147 (324)	1.3 (48)
1100 x 750	44" x 30"	93 (205)	0.8 (30)	131 (289)	1.2 (45)	169 (373)	1.7 (60)
1100 x 900	44" x 36"	105 (231)	1.0 (36)	148 (326)	1.5 (54)	191 (421)	2.0 (72)
1200 x 600	48" x 24"	93 (205)	0.7 (26)	132 (291)	1.1 (39)	170 (375)	1.4 (52)
1200 x 750	48" x 30"	106 (234)	0.9 (33)	152 (335)	1.4 (49)	196 (432)	1.8 (66)
1200 x 900	48" x 36"	121 (267)	1.1 (39)	172 (379)	1.6 (59)	222 (489)	2.2 (79)
1350 x 750	54" x 30"	114 (251)	1.0 (37)	161 (355)	1.5 (55)	208 (459)	2.0 (74)
1350 x 900	54" x 36"	127 (280)	1.2 (44)	176 (388)	1.8 (66)	232 (511)	2.4 (89)
1350 x 1000	54" x 40"	136 (300)	1.4 (49)	194 (428)	2.0 (74)	251 (553)	2.7 (98)
1500 x 900	60" x 36"	145 (320)	1.4 (49)	207 (456)	2.0 (74)	267 (589)	2.7 (98)
1500 x 1000	60" x 40"	155 (342)	1.5 (55)	220 (485)	2.3 (82)	286 (631)	3.0 (109)
1500 x 1050	60" x 42"	163 (359)	1.6 (57)	232 (511)	2.4 (86)	300 (661)	3.2 (115)
1500 x 1200	60" x 48"	178 (392)	1.8 (66)	254 (560)	2.7 (98)	328 (723)	3.6 (131)
1650 x 1000	66" x 40"	160 (353)	1.7 (60)	227 (500)	2.5 (90)	294 (648)	3.3 (120)
1650 x 1050	66" x 42"	166 (366)	1.7 (63)	237 (522)	2.6 (95)	307 (677)	3.5 (126)
1650 x 1200	66" x 48"	183 (403)	2.0 (72)	260 (573)	3.0 (108)	337 (743)	4.0 (144)
1800 x 1200	72" x 48"	207 (456)	2.2 (79)	295 (650)	3.2 (118)	382 (842)	4.3 (157)
1800 x 1350	72" x 54"	229 (505)	2.4 (89)	327 (721)	3.6 (133)	424 (935)	4.9 (177)
1800 x 1500	72" x 60"	247 (545)	2.7 (98)	353 (778)	4.1 (148)	458 (1010)	5.4 (197)
2000 x 1350	80" x 54"	256 (564)	2.7 (98)	366 (807)	4.1 (148)	474 (1045)	5.4 (197)
2000 x 1500	80" x 60"	277 (611)	3.0 (109)	389 (858)	4.5 (164)	462 (1019)	6.0 (219)

Note : Weight and Volume values shown are approximate values only.

Round Duct Silencer

Type : RDS

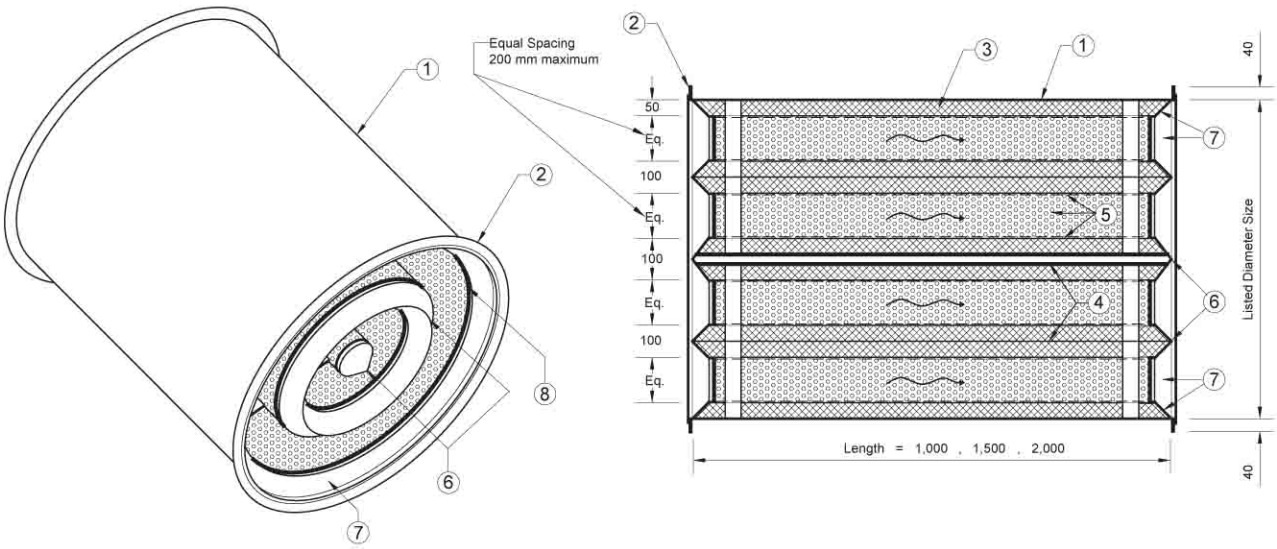

Constructed of galvanized steel sheet, round shaped, high strength structure, flange type. All inside casing as well as circular baffle(s) are lined by fiberglass insulation 48 kg/m³ dense, 50 mm thick with glass cloth facing and covered with perforated galvanized steel sheet for protecting all fiberglass surface from erosion. Both ends of acoustic circular baffle(s) and all edges of fiberglass at entrance and exit of duct silencer are covered with galvanized steel sheet for protecting all fiberglass edges. All joints of perforated galvanized steel sheets, all joints between solid circular noses, solid bell mouths and perforated galvanized steel sheets are sealed by silicone sealant to further ensure full protection of all fiberglass edges. High Dynamic Insertion Loss, Low Static Pressure Drop with Test Certificate in accordance with Standards Australia (AS), AS 1277. Suitable for mounting to round duct line or axial fan for noise reduction from its noise source effectively.

FEATURES

1. Casing, constructed of galvanized steel sheet.
2. Flanges, constructed of heavy gauge steel plate, welded to casing and attached to small flange formed from the casing edge to ensure rigidity and without leakage.
3. Internal liner, all inside casing are lined by fiberglass insulation 48 kg/m³ dense, 50 mm thick with glass cloth facing.
4. Acoustic Circular Baffle(s), constructed of galvanized steel sheet covered with fiberglass insulation 48 kg/m³ dense, 50 mm thick with glass cloth facing around the galvanized steel sheet. The width of acoustic circular baffle(s) spacing for air passages in range of 115-200 mm.
5. Perforated Sheets, all surfaces of fiberglass with glass cloth facing are covered by perforated galvanized steel sheet for protecting all fiberglass surfaces from erosion.
6. Solid Circular Noses, both ends of acoustic circular baffle(s) are covered with galvanized steel sheet as solid circular noses for protecting all fiberglass edges and increasing noise reduction.
7. Solid Bell Mouths, all edges of fiberglass at entrance and exit of round duct silencer are covered with galvanized steel sheet as solid bell mouths for protecting all fiberglass edges and minimizing air turbulence.
8. Silicone Sealants, sealed all joints of perforated galvanized steel sheets, all joints between solid circular noses, solid bell mouths and perforated galvanized steel sheets to further ensure full protection of all fiberglass edges.

(Measurement : mm)

Round Duct Silencer

Type : RDS

Dynamic Insertion Loss Data

Length	Outlet Velocity	Octave Band Centre Frequency - Hz							
		63	125	250	500	1000	2000	4000	8000
m (ft)	MPS (FPM)	Dynamic Insertion Loss - dB							
1.0 (3.28)	3.409 (671)	1	8	12	28	37	35	22	17
	5.682 (1119)	2	8	11	27	36	34	22	17
	7.955 (1566)	1	8	11	27	36	34	21	17
1.5 (4.92)	3.409 (671)	4	10	18	41	44	45	32	25
	5.682 (1119)	4	11	17	42	43	44	33	25
	7.955 (1566)	4	11	18	41	44	44	32	25
2.0 (6.56)	3.409 (671)	5	13	24	47	46	48	38	31
	5.682 (1119)	5	12	24	47	46	48	39	32
	7.955 (1566)	5	13	23	46	47	48	39	32

Round Duct Silencer

Type : RDS

Performance Data

Listed Diameter Size		Outlet Velocity MPS (FPM)	3 (591)	4 (787)	5 (984)	6 (1181)	7 (1378)	8 (1575)
mm	inches	Length - m (ft)	Static Pressure Drop, Ps - Pa (in.wg.)					
		1.0 (3.28)	0.0 (0.000)	0.3 (0.001)	0.7 (0.003)	1.1 (0.004)	1.6 (0.006)	2.0 (0.008)
		1.5 (4.92)	0.0 (0.000)	1.2 (0.005)	2.3 (0.009)	3.3 (0.013)	4.2 (0.017)	5.0 (0.020)
(Ak - m^2)	(Ak - ft^2)	2.0 (6.56)	0.6 (0.002)	1.8 (0.007)	3.5 (0.014)	5.8 (0.023)	8.7 (0.035)	12.2 (0.049)
450 (0.083)	18" (0.893)	CMS (CFM)	0.249 (528)	0.332 (703)	0.415 (879)	0.498 (1055)	0.581 (1231)	0.664 (1406)
500 (0.112)	20" (1.206)	CMS (CFM)	0.336 (713)	0.448 (949)	0.560 (1187)	0.672 (1424)	0.784 (1662)	0.896 (1899)
550 (0.146)	22" (1.572)	CMS (CFM)	0.438 (929)	0.584 (1237)	0.73 (1547)	0.876 (1857)	1.022 (2166)	1.168 (2476)
600 (0.183)	24" (1.970)	CMS (CFM)	0.549 (1164)	0.732 (1550)	0.915 (1938)	1.098 (2327)	1.281 (2715)	1.464 (3103)
650 (0.220)	26" (2.368)	CMS (CFM)	0.660 (1399)	0.880 (1864)	1.100 (2330)	1.320 (2797)	1.540 (3263)	1.760 (3730)
700 (0.251)	28" (2.702)	CMS (CFM)	0.753 (1597)	1.004 (2126)	1.255 (2659)	1.506 (3191)	1.757 (3723)	2.008 (4256)
750 (0.283)	30" (3.046)	CMS (CFM)	0.849 (1800)	1.132 (2397)	1.415 (2997)	1.698 (3597)	1.981 (4197)	2.264 (4797)
800 (0.314)	32" (3.380)	CMS (CFM)	0.942 (1998)	1.256 (2660)	1.570 (3326)	1.884 (3992)	2.198 (4658)	2.512 (5324)
850 (0.346)	34" (3.724)	CMS (CFM)	1.038 (2201)	1.384 (2931)	1.730 (3664)	2.076 (4398)	2.422 (5132)	2.768 (5865)
900 (0.377)	36" (4.058)	CMS (CFM)	1.131 (2398)	1.508 (3194)	1.885 (3993)	2.262 (4792)	2.639 (5592)	3.016 (6391)
950 (0.400)	38" (4.306)	CMS (CFM)	1.200 (2545)	1.600 (3389)	2.000 (4237)	2.400 (5085)	2.800 (5934)	3.200 (6782)
1000 (0.461)	40" (4.962)	CMS (CFM)	1.383 (2933)	1.844 (3905)	2.305 (4883)	2.766 (5860)	3.227 (6838)	3.688 (7815)
1050 (0.526)	42" (5.662)	CMS (CFM)	1.578 (3346)	2.104 (4456)	2.630 (5571)	3.156 (6687)	3.682 (7802)	4.208 (8918)
1100 (0.595)	44" (6.405)	CMS (CFM)	1.785 (3785)	2.380 (5041)	2.975 (6303)	3.570 (7564)	4.165 (8826)	4.760 (10088)
1150 (0.667)	46" (7.180)	CMS (CFM)	2.001 (4243)	2.668 (5651)	3.335 (7065)	4.002 (8480)	4.669 (9894)	5.336 (11309)
1200 (0.744)	48" (8.008)	CMS (CFM)	2.232 (4733)	2.976 (6302)	3.720 (7880)	4.464 (9457)	5.208 (11035)	5.952 (12613)
1250 (0.817)	50" (8.794)	CMS (CFM)	2.451 (5197)	3.268 (6921)	4.085 (8653)	4.902 (10386)	5.719 (12118)	6.536 (13851)
1300 (0.880)	52" (9.472)	CMS (CFM)	2.640 (5598)	3.520 (7454)	4.400 (9320)	5.280 (11186)	6.160 (13052)	7.040 (14918)
1350 (0.942)	54" (10.140)	CMS (CFM)	2.826 (5993)	3.768 (7980)	4.710 (9978)	5.652 (11975)	6.594 (13973)	7.536 (15971)
1400 (1.005)	56" (10.818)	CMS (CFM)	3.015 (6393)	4.020 (8514)	5.025 (10645)	6.030 (12776)	7.035 (14907)	8.040 (17038)
1450 (1.068)	58" (11.496)	CMS (CFM)	3.204 (6794)	4.272 (9047)	5.340 (11312)	6.408 (13577)	7.476 (15841)	8.544 (18106)
1500 (1.131)	60" (12.174)	CMS (CFM)	3.393 (7195)	4.524 (9581)	5.655 (11979)	6.786 (14377)	7.917 (16776)	9.048 (19174)

Round Duct Silencer

Type : RDS

Physical Data

Listed Size		Length - m (ft)					
		1.0 (3.28)		1.5 (4.92)		2.0 (6.56)	
mm	inches	Weight kgs (lbs)	Volume m^3 (ft^3)	Weight kgs (lbs)	Volume m^3 (ft^3)	Weight kgs (lbs)	Volume m^3 (ft^3)
450	18"	24 (53)	0.16 (6)	33 (73)	0.24 (8)	43 (95)	0.32 (11)
500	20"	28 (62)	0.20 (7)	39 (86)	0.29 (10)	49 (108)	0.39 (14)
550	22"	31 (68)	0.24 (8)	43 (95)	0.36 (13)	54 (119)	0.48 (17)
600	24"	33 (73)	0.28 (10)	46 (101)	0.42 (15)	58 (128)	0.57 (20)
650	26"	37 (82)	0.33 (12)	51 (112)	0.50 (18)	65 (143)	0.66 (23)
700	28"	42 (93)	0.38 (14)	57 (126)	0.58 (20)	73 (161)	0.77 (27)
750	30"	47 (104)	0.44 (16)	64 (141)	0.66 (23)	81 (179)	0.88 (31)
800	32"	52 (115)	0.50 (18)	71 (157)	0.75 (27)	90 (198)	1.01 (36)
850	34"	57 (126)	0.57 (20)	78 (172)	0.85 (30)	99 (218)	1.13 (40)
900	36"	62 (137)	0.64 (22)	85 (187)	0.95 (34)	107 (236)	1.27 (45)
950	38"	77 (170)	0.71 (25)	108 (238)	1.06 (38)	139 (306)	1.42 (50)
1000	40"	81 (179)	0.79 (28)	114 (251)	1.18 (42)	146 (322)	1.57 (55)
1050	42"	85 (187)	0.87 (31)	119 (262)	1.30 (46)	153 (337)	1.73 (61)
1100	44"	89 (196)	0.95 (34)	124 (273)	1.43 (50)	160 (353)	1.90 (67)
1150	46"	93 (205)	1.04 (37)	130 (287)	1.56 (55)	167 (368)	2.08 (73)
1200	48"	96 (212)	1.13 (40)	135 (298)	1.70 (60)	174 (384)	2.26 (80)
1250	50"	101 (223)	1.23 (43)	141 (311)	1.84 (65)	182 (401)	2.45 (87)
1300	52"	109 (240)	1.33 (47)	152 (335)	1.99 (70)	196 (432)	2.65 (94)
1350	54"	116 (256)	1.43 (51)	163 (359)	2.15 (76)	209 (461)	2.86 (101)
1400	56"	124 (273)	1.54 (54)	173 (381)	2.31 (82)	223 (492)	3.08 (109)
1450	58"	132 (291)	1.65 (58)	184 (406)	2.48 (87)	236 (520)	3.30 (117)
1500	60"	140 (309)	1.77 (62)	195 (430)	2.65 (94)	252 (556)	3.53 (125)

Note : Weight and Volume values shown are approximate values only.

Acoustic Louver

Type : ACL

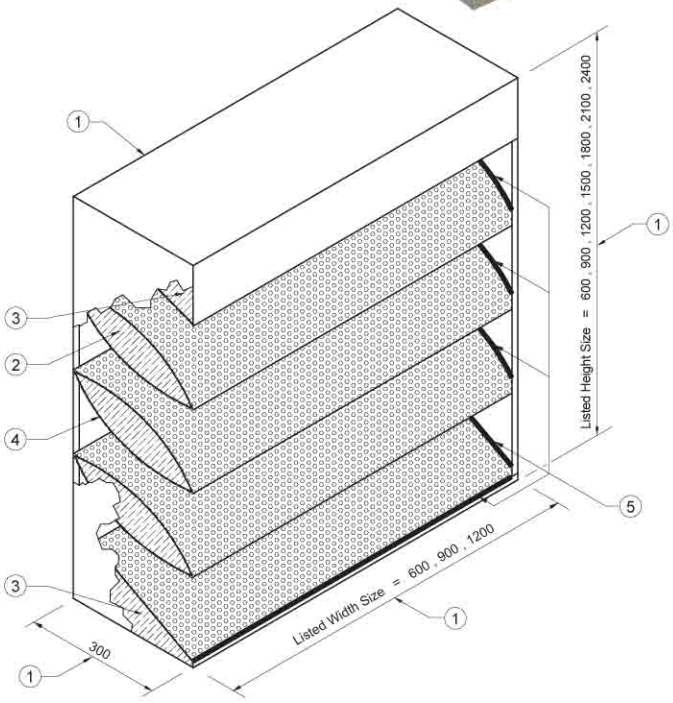

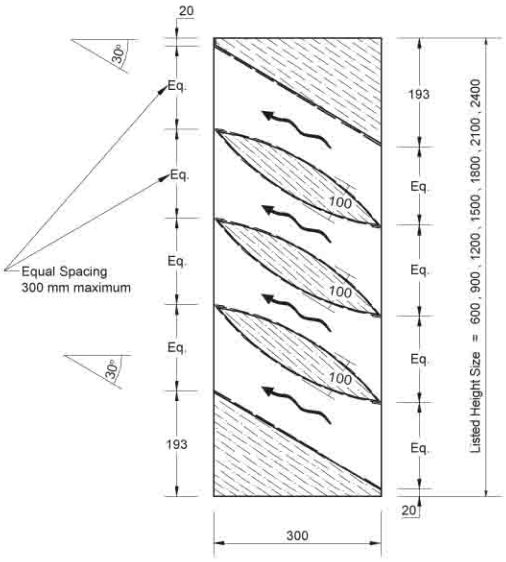

Constructed of galvanized steel sheet, rectangular shaped, high strength structure. The casing is designed in modular sizes for enabling assembly of rectilineal louver wall of almost any size. Blade(s) are airfoil shaped, constructed of perforated galvanized steel sheet, inside the blade(s) are compressed firmly with fiberglass insulation 48kg/m^3 dense with glass cloth facing, to ensure solid packing in the blade(s) without any erosion of fiberglass surfaces, for maximum noise reduction with minimum pressure drop. Head and Base of the louver are also cpmpressed firmly with fiberglass insulation 48 kg/m^3 dense with glass cloth facing, and covered by perforated galvanized steel sheet, inclined plane to the same angle of the blade. Splitter-Blade(s) orientation block(s) horizontal line of sight for enhancing both aesthetics and acoustic performance. All edges of the blade(s), as well as head and base of the louver are sealed by silicone sealant to further ensure full protection of all fiberglass edges. Suitable for mounting to machine room sidewall for ventilation with noise reduction from its noise source effectively.

FEATURES

1. Casing, constructed of galvanized steel sheet, modular sizes enable assembly of rectilineal louver wall of almost any size.
2. Blade(s), airfoil shaped, splitter-blade(s) constructed of perforated galvanized steel sheet, inside the blade(s) are compressed firmly with fiberglass insulation 48 kg/m^3 dense with glass cloth facing, to ensure solid packing in the blade(s) without any erosion of fiberglass surfaces, for maximum noise reduction with minimum pressure drop.
3. Head and Base of the louver are also cpmpressed firmly with fiberglass insulation 48 kg/m^3 dense with glass cloth facing, and covered by perforated galvanized steel sheet, inclined plane to the same angle of the blade.
4. Splitter-Blade(s) orientation block(s) horizontal line of sight for enhancing both aesthetics and acoustic performance.
5. Silicone Sealants, sealed all edges of the blade(s), as well as head and base of the louver to further ensure full protection of all fiberglass edges.

(Measurement : mm)

Acoustic Louver

Type : ACL

Performance Data

Listed Size		Outlet Velocity	3 (591)	4 (787)	5 (984)	6 (1181)	7 (1378)	8 (1575)
mm. (Ak - m²)	inches (Ak - ft²)	MPS (FPM)						
600 x 600 (0.132)	24" x 24" (1.421)	CMS (CFM)	0.396 (840)	0.528 (1118)	0.660 (1398)	0.792 (1678)	0.924 (1958)	1.056 (2238)
600 x 900 (0.221)	24" x 36" (2.379)	CMS (CFM)	0.663 (1406)	0.884 (1872)	1.105 (2341)	1.326 (2810)	1.547 (3278)	1.768 (3747)
600 x 1200 (0.311)	24" x 48" (3.348)	CMS (CFM)	0.933 (1979)	1.244 (2635)	1.555 (3294)	1.866 (3954)	2.177 (4614)	2.488 (5273)
600 x 1500 (0.400)	24" x 60" (4.306)	CMS (CFM)	1.200 (2545)	1.600 (3389)	2.000 (4237)	2.400 (5085)	2.800 (5934)	3.200 (6782)
600 x 1800 (0.434)	24" x 72" (4.672)	CMS (CFM)	1.302 (2761)	1.736 (3677)	2.170 (4597)	2.604 (5518)	3.038 (6438)	3.472 (7358)
600 x 2100 (0.523)	24" x 84" (5.630)	CMS (CFM)	1.569 (3327)	2.092 (4431)	2.615 (5540)	3.138 (6649)	3.661 (7758)	4.184 (8867)
600 x 2400 (0.613)	24" x 96" (6.598)	CMS (CFM)	1.839 (3899)	2.452 (5193)	3.065 (6492)	3.678 (7792)	4.291 (9092)	4.904 (10392)
900 x 600 (0.202)	36" x 24" (2.174)	CMS (CFM)	0.606 (1285)	0.808 (1711)	1.010 (2139)	1.212 (2567)	1.414 (2996)	1.616 (3424)
900 x 900 (0.340)	36" x 36" (3.660)	CMS (CFM)	1.020 (2163)	1.360 (2880)	1.700 (3601)	2.040 (4322)	2.380 (5043)	2.720 (5765)
900 x 1200 (0.477)	36" x 48" (5.134)	CMS (CFM)	1.431 (3034)	1.908 (4040)	2.385 (5052)	2.862 (6063)	3.339 (7075)	3.816 (8086)
900 x 1500 (0.615)	36" x 60" (6.620)	CMS (CFM)	1.845 (3912)	2.460 (5210)	3.075 (6514)	3.690 (7818)	4.305 (9122)	4.920 (10427)
900 x 1800 (0.666)	36" x 72" (7.169)	CMS (CFM)	1.998 (4237)	2.664 (5642)	3.330 (7054)	3.996 (8467)	4.662 (9879)	5.328 (11291)
900 x 2100 (0.804)	36" x 84" (8.654)	CMS (CFM)	2.412 (5115)	3.216 (6811)	4.020 (8516)	4.824 (10220)	5.628 (11925)	6.432 (13630)
900 x 2400 (0.941)	36" x 96" (10.129)	CMS (CFM)	2.823 (5986)	3.764 (7972)	4.705 (9967)	5.646 (11962)	6.587 (13958)	7.528 (15953)
1200 x 600 (0.273)	48" x 24" (2.939)	CMS (CFM)	0.819 (1737)	1.092 (2313)	1.365 (2892)	1.638 (3471)	1.911 (4050)	2.184 (4629)
1200 x 900 (0.458)	48" x 36" (4.930)	CMS (CFM)	1.374 (2914)	1.832 (3880)	2.290 (4851)	2.748 (5822)	3.206 (6794)	3.664 (7765)
1200 x 1200 (0.644)	48" x 48" (6.932)	CMS (CFM)	1.932 (4097)	2.576 (5455)	3.220 (6821)	3.864 (8187)	4.508 (9552)	5.152 (10918)
1200 x 1500 (0.829)	48" x 60" (8.923)	CMS (CFM)	2.487 (5273)	3.316 (7022)	4.145 (8780)	4.974 (10538)	5.803 (12296)	6.632 (14054)
1200 x 1800 (0.899)	48" x 72" (9.677)	CMS (CFM)	2.697 (5719)	3.596 (7616)	4.495 (9522)	5.394 (11429)	6.293 (13335)	7.192 (15241)
1200 x 2100 (1.084)	48" x 84" (11.668)	CMS (CFM)	3.252 (6896)	4.336 (9183)	5.420 (11481)	6.504 (13780)	7.588 (16079)	8.672 (18377)
1200 x 2400 (1.270)	48" x 96" (13.670)	CMS (CFM)	3.810 (8079)	5.080 (10758)	6.350 (13451)	7.620 (16144)	8.890 (18837)	10.160 (21530)

Acoustic Louver

Type : ACL

Physical Data

Listed Size		Weight	Volume
mm.	inches	kgs (lbs)	m^3 (ft^3)
600 x 600	24" x 24"	11 (24)	0.1 (4)
600 x 900	24" x 36"	14 (31)	0.2 (6)
600 x 1200	24" x 48"	18 (40)	0.2 (8)
600 x 1500	24" x 60"	21 (46)	0.3 (10)
600 x 1800	24" x 72"	26 (57)	0.3 (12)
600 x 2100	24" x 84"	30 (66)	0.4 (14)
600 x 2400	24" x 96"	33 (73)	0.4 (16)
900 x 600	36" x 24"	14 (31)	0.2 (6)
900 x 900	36" x 36"	19 (42)	0.2 (9)
900 x 1200	36" x 48"	23 (51)	0.3 (12)
900 x 1500	36" x 60"	27 (60)	0.4 (15)
900 x 1800	36" x 72"	34 (75)	0.5 (18)
900 x 2100	36" x 84"	39 (86)	0.6 (21)
900 x 2400	36" x 96"	43 (95)	0.6 (24)
1200 x 600	48" x 24"	18 (40)	0.2 (8)
1200 x 900	48" x 36"	23 (51)	0.3 (12)
1200 x 1200	48" x 48"	28 (62)	0.4 (16)
1200 x 1500	48" x 60"	34 (75)	0.5 (20)
1200 x 1800	48" x 72"	42 (93)	0.6 (24)
1200 x 2100	48" x 84"	47 (104)	0.8 (28)
1200 x 2400	48" x 96"	53 (117)	0.9 (32)

Note : Weight and Volume values shown are approximate values only.

How to Order

XXX-XX

Type :-

VD	=	Volume Damper, Ordinary
VL	=	Volume Damper, Low Leak
MD	=	Motorized Damper, Ordinary
ML	=	Motorized Damper, Low Leak
RVD	=	Round Volume Damper, Ordinary
RVL	=	Round Volume Damper, Low Leak
RMD	=	Round Motorized Damper, Ordinary
RML	=	Round Motorized Damper, Low Leak
OVD	=	Flat Oval Volume Damper, Ordinary
OVL	=	Flat Oval Volume Damper, Low Leak
OMD	=	Flat Oval Motorized Damper, Ordinary
OML	=	Flat Oval Motorized Damper, Low Leak
GD	=	Gravity Damper
RGD	=	Round Gravity Damper
RD	=	Relief Damper
FD	=	Fire Damper
FDC	=	Fire Damper, Curtain Type
FSD	=	Fire/Smoke Damper
DS	=	Duct Silencer
RDS	=	Round Duct Silencer
ACL	=	Acoustic Louver

Size (mm) :-

Figure x Figure	=	Width x Height
Figure x Figure x Figure	=	Width x Height x Length/Depth
∅ Figure x Figure	=	Diameter x Length
∅ Figure	=	Diameter

Example	: **VD-300x600**	=	Volume Damper, Ordinary, Size 300 mm (Width) x 600 mm (Height)
	RVL- ∅400	=	Round Volume Damper, Low Leakage, Size 400 mm (Diameter)
	FSD-1200x600	=	Fire/Smoke Damper, Size 1200 mm (Width) x 600 mm (Height)
	FDC-1200x600	=	Fire Damper, Curtain Type, Size 1200 mm (Width) x 600 mm (Height)
	DS-1200x900x1500	=	Duct Silencer, Size 120 mm (Width) x 900 mm (Height) x 1500 mm (Length)
	RDS- ∅1000x1500	=	Round Duct Silencer, Size 1000 mm (Diameter) x 1500 mm (Length)
	ACL-900x1500x300	=	Acoustic Louver, Size 900 mm (Width) x 1500 mm (Height) x 300 mm (Depth)

We, **PCJ INDUSTRIES CO.,LTD.**, was established in 1998, specialize in production of Steel Fire Doors, Air Outlets, Duct Dampers, Duct Silencers and Cable Trunks. Most of our products have been certified by several organizations for standardization, i.e. : **(Underwriters Laboratories Inc.), (British Standards Institution), (Thai Industrial Standards Institute), (Air Diffusion Council), (Standards Australia). Moreover, our company has been certified by (International Organization for Standardization), ISO 9001 : 2008 as well.** We have our own factory established on our own land, area 40,000 sq.m.(approx.), in Kaengkhoi, Saraburi, Thailand.

Our Policy has always been, and will continue to be, the production and On Time-Every Time Schedule Delivery of Quality, Reliability and Competitively Priced Products. We have invested for instruments, machines and we have experience engineer teams take full time to research and develop our product lines continuously, including new product designs to meet worldwide market demands.

Our products have been distributed to many countries worldwide :-

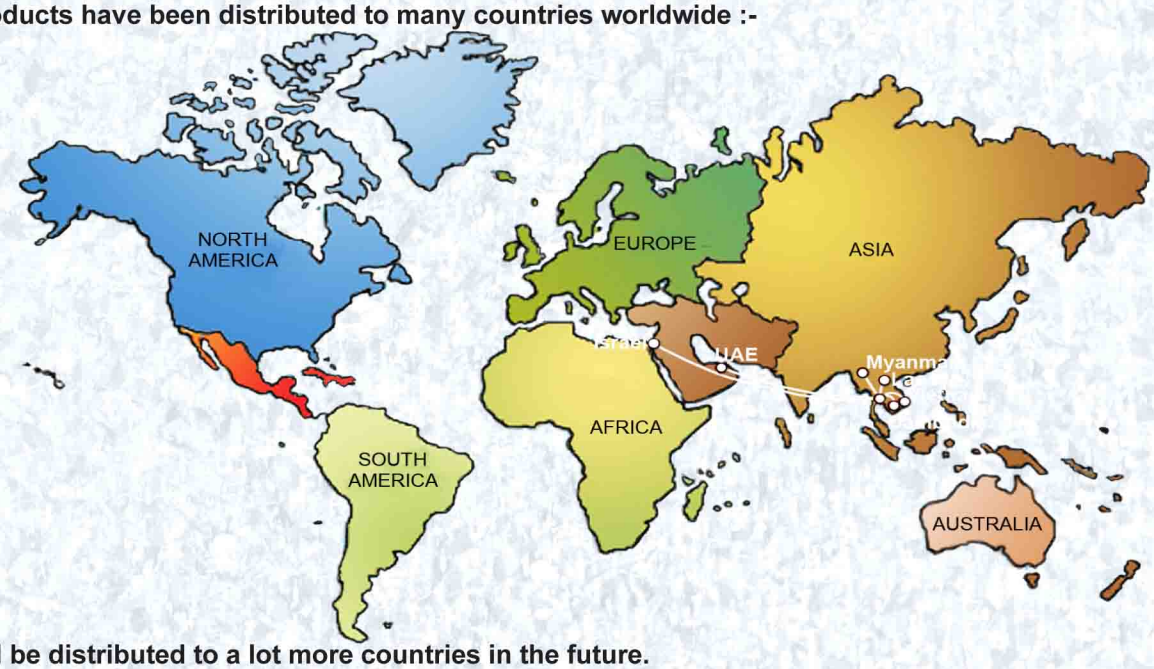

and will be distributed to a lot more countries in the future.

PCJ INDUSTRIES CO.,LTD.
พีซีเจ อุตสาหกรรม บจก.

199/24-25 Vibhavadeerangsit Road, Samsennai, Payathai, Bangkok 10400, Thailand
Tel : +66 2 2701938, +66 2 2781604, +66 2 2790859, +66 2 2794166, +66 2 6160184, +66 2 6160185
Fax : +66 2 6160071 Email : sales@pcjindustries.co.th Website : www.pcjindustries.co.th

ISO 9001 : 2008 Certified
Certificate No. FM 509124

Printed in Thailand
0 1 0 3 1 1