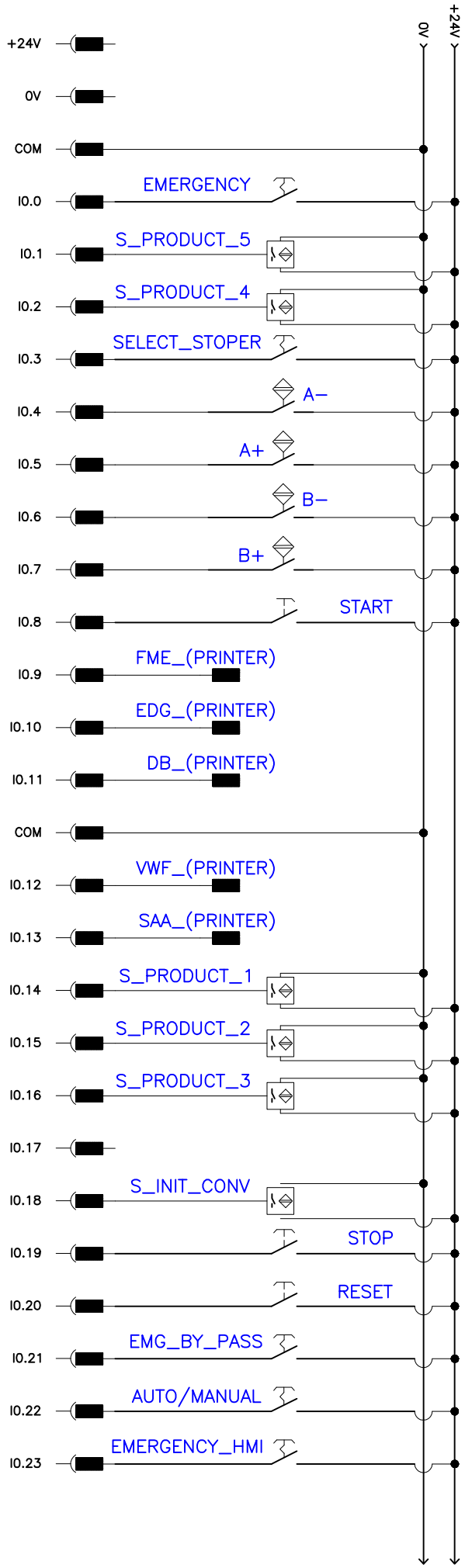

CONTRACTOR

GENERAL NOTES

REVISION

REV	DATE	DESCRIPTION	DRAWN	CHECKED	APPROVE
-	22-02-2016	FIRST ISSUED DRAWING	RYN	TFK	ERJ

PROJECT: KIWI

TITLE: INPUT PLC

SCALE: N.T.S

PROJECT NO: WO-IGE/160229-0010

DRAWING NO: IGE/EWO/DWG-EL/PL-007

SHEET: 03 OF 05

OWNER: PT. SCHNEIDER ELECTRIC MANUFACTURING BATAM

BUILDER: PT. JOVAN TECHNOLOGIES