DBW-v5.1.1

File: LowLevelv4_1_1.kicad_sch

DBW-v5.1.2

File: LowLevelv4_1_2.kicad_sch

DBW-v5.1.3

File: LowLevelv4_1_3 .kicad_sch

Sheet: /
File: DBW5.10.kicad_sch

Title: DBW Version4

Size: A4	Date: 2025-11-11	**Rev:**
KiCad E.D.A. 10.0.1		Id: 1/4

Arduino Due/Mega pin header connectors

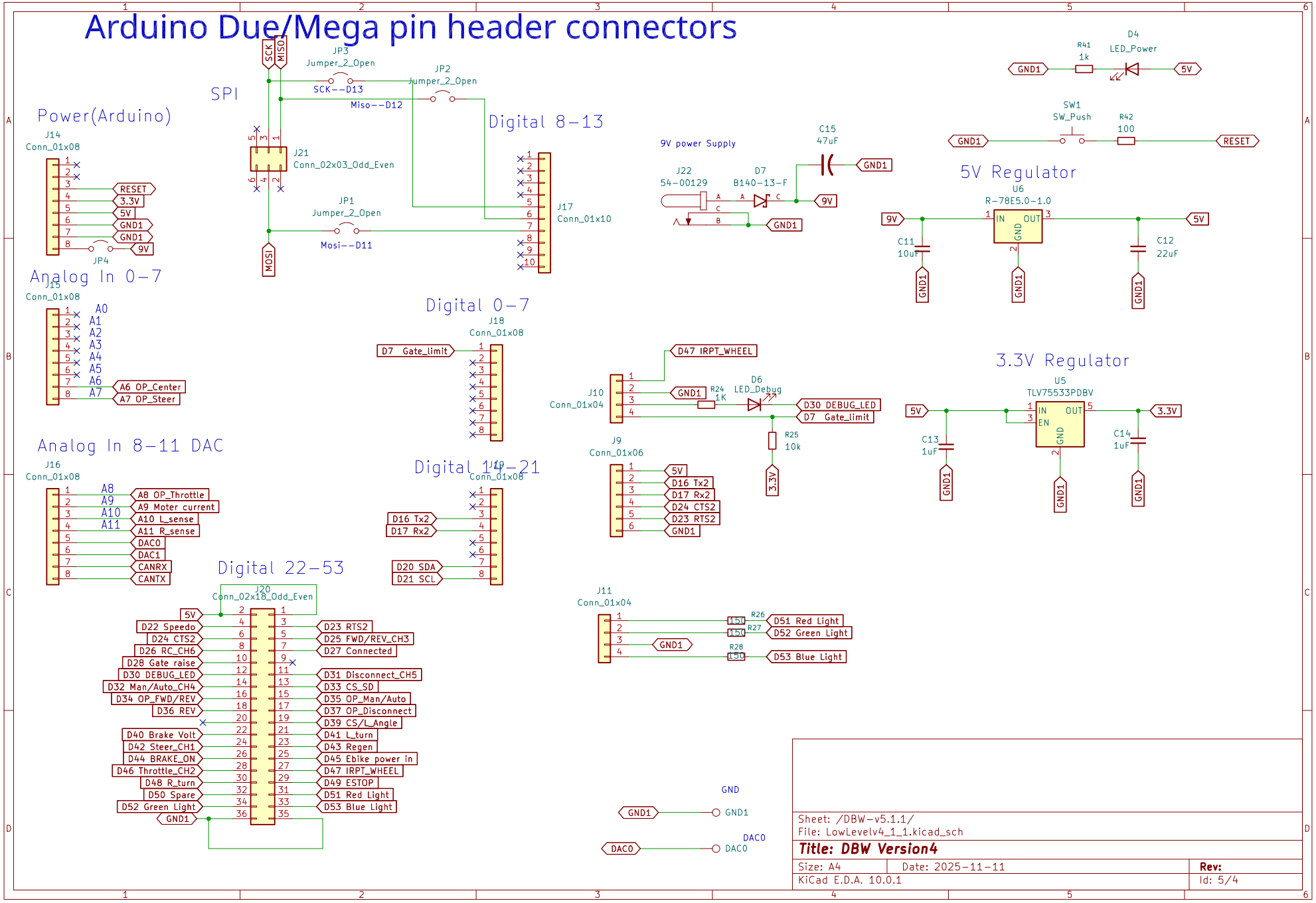

Sheet: /DBW-v5.1.1/
File: LowLevelv4_1_1.kicad_sch

Title: DBW Version4

Size: A4	Date: 2025-11-11	Rev:
KiCad E.D.A. 10.0.1		Id: 5/4

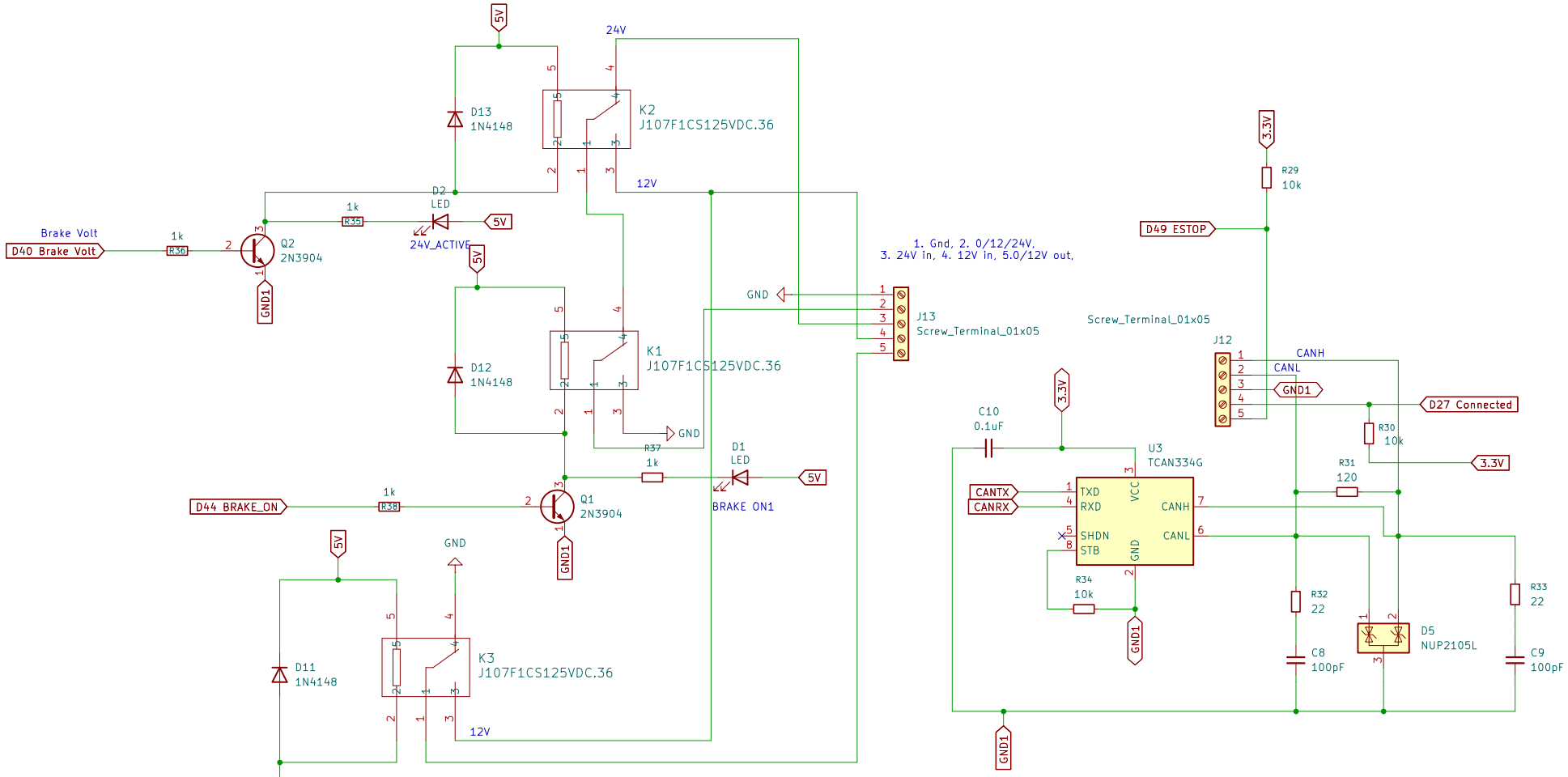

Sheet: /DBW-v5.1.2/
File: LowLevelv4_1_2.kicad_sch

Title: DBW Version4

Size: A4	Date: 2025-11-11	Rev:
KiCad E.D.A. 10.0.1		Id: 6/4

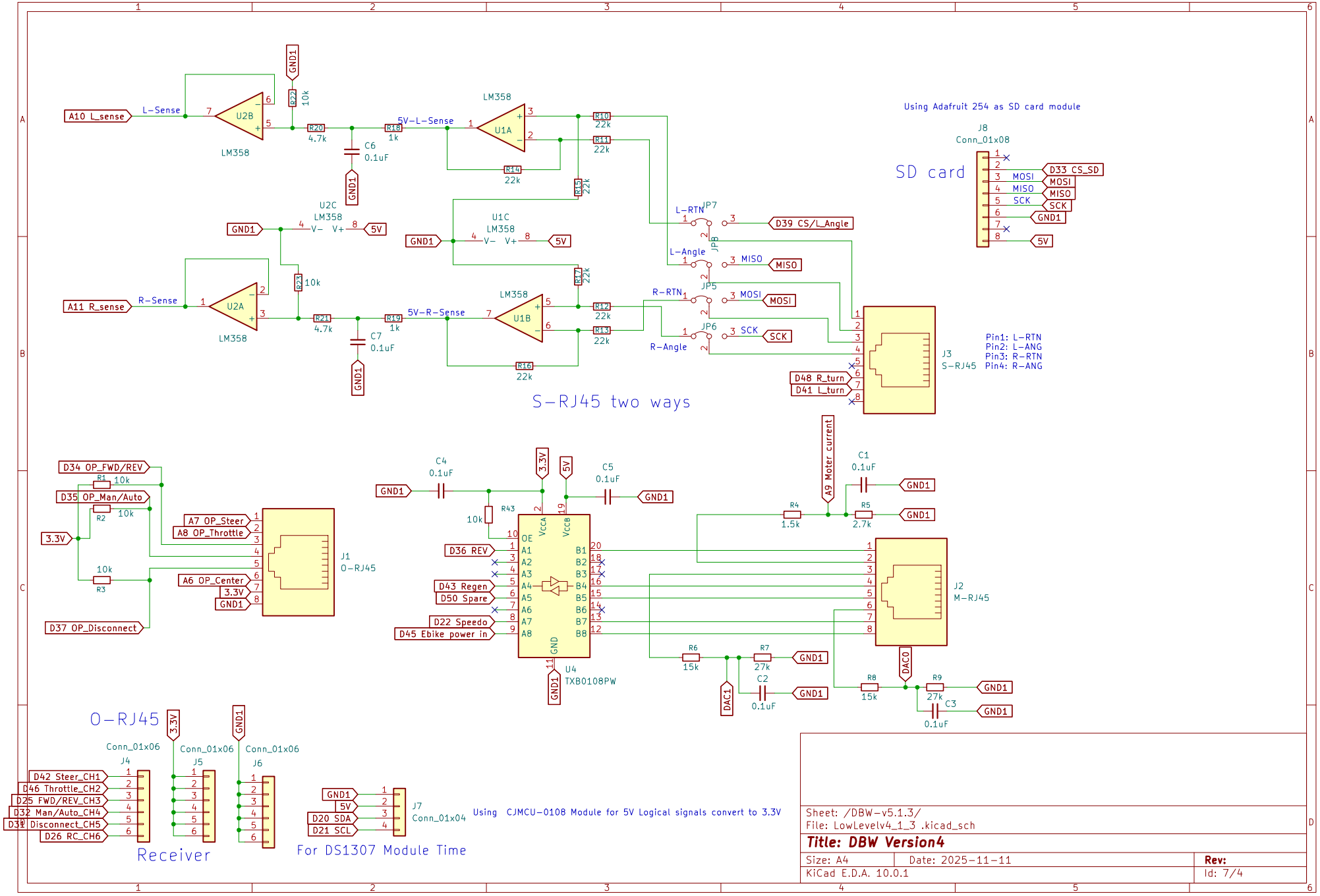

Sheet: /DBW-v5.1.3/
File: LowLevelv4_1_3 .kicad_sch

Title: DBW Version4

Size: A4	Date: 2025-11-11	Rev:
KiCad E.D.A. 10.0.1		Id: 7/4